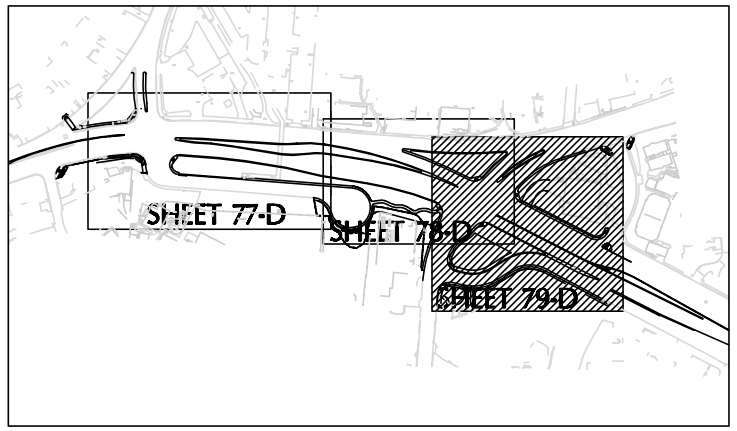

KEYMAP

TORREY PINES RD

TREES SHALL MAINTAIN A 5' CLEARANCE FROM ALL UNDERGROUND UTILITIES.

262 | RAP IND 'CLA'
5 GAL

9 | PRU CER 'ATR'
36" BOX

4" TREE DRAIN INLETS (ATRIUM GRATE) WITH 4" PERFORATED DRAIN PIPE TO CONNECT INTO DRAINAGE STRUCTURE. REFER TO DETAIL A ON SHEET 78-D AND CIVIL ENGINEER'S DRAWINGS.

EXISTING TORREY PINE TREES TO REMAIN PRESERVE AND PROTECT DURING CONST. PERIOD. PRUNE AS NEEDED (TYP. SYMBOL)

EXISTING TREES TO REMAIN (TYP. SYMBOL)

AS REQ'D | LAM SPE
FLAT PLANTS

SEE CIVIL PLANS FOR CONCRETE WORK. SEE SPECIFICATIONS FOR SPECIAL COLORED STAMPED CONCRETE FINISH.

EXISTING TORREY PINE TREE TO REMAIN PRESERVE AND PROTECT DURING CONST. PRUNE AND TRIM AS NEEDED

MATCHLINE - SEE SHEET 78-D

CONNECT TO PROPOSED STUBOUT- SEE SHEET 19-D

4 | ECH FAS
5 GAL

CONNECT TO PROPOSED STUBOUT - SEE SHEET 19-D

41 | ESC EXO 'FRA'
5 GAL

100 | AGA AFR
1 GAL

24 | POD HEN
15 GAL

70 | PEL PEL
1 GAL

EXISTING TREES TO REMAIN (TYP. SYMBOL)

AS REQ'D | TRA ASI
FLAT PLANTS

419 | PIT TOB 'W.D.'
1 GAL

13 | PHO TEN 'ATR'
15 GAL

FINAL TRANSPLANTED LOCATION OF TORREY PINE TREES PER THE TORREY PINES RELOCATION PHASE. REFER TO DRAWING NO.'S 31000-D. PRESERVE AND PROTECT DURING CONSTRUCTION.

136 | STR REG
5 GAL

7 | LIQ STY
24" BOX

464 | HEM HYB. 'Y'
1 GAL

HIDDEN VALLEY RD

MAILBOX (LOCATION VERIFIED IN FIELD)

4' WIDE DECOMPOSED GRANITE PATH

SEE PERMIT FOR PRIVATE WORK

CONSTRUCTION STAGING AREA.

ARDATH RD

ARDATH RD (FRONTSGE)

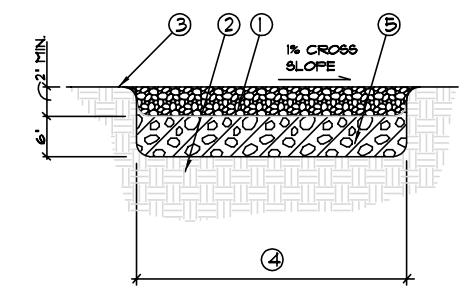

1. DECOMOPOSED GRANITE W/ RESIN-MODIFIED EMULSION PAVEMENT BINDER, SEE SPECS. 90% MIN. COMPACTION
2. 90% MIN. COMPACTED SUBGRADE 6" DEEP
3. FINISH GRADE
4. 4' WIDTH
5. 90 % MIN. COMPACTED CLASS II BASE SEE NOTE #3

A DECOMPOSED GRANITE PATH

NOT TO SCALE

REFER TO SHEET 80-D FOR PLANT MATERIAL LEGEND AND DETAILS

NORTH

0 10 20 40 60
SCALE: 1"= 20'

KTU+A
KAWASAKI THELACKER UEMO + ASSOCIATES
LANDSCAPE ARCHITECTURE + PLANNING
3916 Normal Street
San Diego, Ca 92103
Phone: (619) 294-4477
Fax: (619) 294-9965

PRIVATE CONTRACT

PHASE C

PLANTING PLAN FOR:
RECONFIGURATION OF TORREY PINES ROAD, ARDATH ROAD, HIDDEN VALLEY ROAD, AND ARDATH ACCESS ROAD

CITY OF SAN DIEGO, CALIFORNIA
ENGINEERING DEPARTMENT
SHEET 79 OF 99 SHEETS

W.O. NO. 525830

FOR CITY ENGINEER | DATE

DESCRIPTION	BY	APPROVED	DATE	FILMED
ORIGINAL	KTU+A			

188-625
NAD 83 COORDINATES

248-1689
LAMBERT COORDINATES

CONTRACTOR _____ DATE STARTED _____
INSPECTOR _____ DATE COMPLETED _____

30479-79-D

REGISTERED LANDSCAPE ARCHITECT
FRANK H. KAWASAKI
No. 1084
Exp. 3/31/03
STATE OF CALIFORNIA