City of San Diego

CONTRACTOR'S NAME: J.R. Filanc Construction Co., Inc.
ADDRESS: 740 N. Andreasen Drive, Escondido, CA 92029
TELEPHONE NO.: 760-941-7130 **FAX NO.:**
CITY CONTACT: Brittany Friedenreich, Senior Contract Specialist, Email: BFriedenreic@sandiego.gov
Phone No. (619) 533-3104
J. Quicho / A. Jaro / N. Alkuree

BIDDING DOCUMENTS

e - Bidding

FOR

PURE WATER PROGRAM (PWP) CENTRAL AREA SMALL-SCALE FACILITY

BID NO.: **K-23-2119-DBB-3-C**
SAP NO. (WBS/IO/CC): **B-21151**
CLIENT DEPARTMENT: **2000**
COUNCIL DISTRICT: **2**
PROJECT TYPE: **BO, BI**

THIS CONTRACT WILL BE SUBJECT TO THE FOLLOWING:

- PROJECT LABOR AGREEMENT (PLA)
- THE CITY'S SUBCONTRACTING PARTICIPATION REQUIREMENTS FOR SLBE PROGRAM
- ELIGIBLE FOR JOINT VENTURE PREQUALIFICATION STATUS (see Instructions to Bidders)
- PREVAILING WAGE RATES: STATE ☒ FEDERAL ☐
- APPRENTICESHIP

BID DUE DATE:

2:00 PM
DECEMBER 7, 2022

CITY OF SAN DIEGO'S ELECTRONIC BIDDING SITE, PLANETBIDS
http://www.sandiego.gov/cip/bidopps/index.shtml

ENGINEER OF WORK

The engineering Specifications and Special Provisions contained herein have been prepared by or under the direction of the following Registered Engineer:

1) Registered Engineer	10/20/2022 Date	Seal:
2) For City Engineer	10/20/2022 Date	Seal:

TABLE OF CONTENTS

SECTION **PAGE**

1. REQUIRED DOCUMENTS SCHEDULE....4
2. NOTICE INVITING BIDS....6
3. INSTRUCTIONS TO BIDDERS....9
4. PERFORMANCE AND PAYMENT BONDS....19
5. ATTACHMENTS:
   - A. SCOPE OF WORK....22
   - B. RESERVED....24
   - C. EQUAL OPPORTUNITY CONTRACTING PROGRAM....25
   - D. PREVAILING WAGE....45
   - E. SUPPLEMENTARY SPECIAL PROVISIONS....50
     - TECHNICALS....64
       1. Appendix A - Notice of Exemption....1436
       2. Appendix B - Fire Hydrant Meter Program....1439
       3. Appendix C - Materials Typically Accepted by Certificate of Compliance....1453
       4. Appendix D - Sample City Invoice with Cash Flow Forecast....1455
       5. Appendix E - Location Map....1458
       6. Appendix F - Adjacent Project Map....1460
       7. Appendix G - Monthly Drinking Water Discharge Monitoring Form....1462
       8. Appendix H - Sample of Public Notice....1465
       9. Appendix I - Advanced Metering Infrastructure (AMI) Device Protection....1467
       10. Appendix J LCP Tracker Third Party User Agreement and Forms....1474
   - F. PROJECT LABOR AGREEMENT....1494
   - G. CONTRACT AGREEMENT....1564
6. CERTIFICATIONS AND FORMS....1567

REQUIRED DOCUMENTS SCHEDULE DURING BIDDING AND AWARDING

The Bidder's attention is directed to the City's Municipal Code §22.0807(e), (3)-(5) for important information regarding grounds for debarment for failure to submit required documentation.

The specified Equal Opportunity Contracting Program (EOCP) forms are available for download from the City's web site at:

http://www.sandiego.gov/eoc/forms/index.shtml

ITEM	DOCUMENT TO BE SUBMITTED	WHEN DUE	FROM
1.	Bid Bond (PDF via PlanetBids)	At Time of Bid	ALL BIDDERS
2.	Contractors Certification of Pending Actions	At Time of Bid	ALL BIDDERS
3.	Mandatory Disclosure of Business Interests	At Time of Bid	ALL BIDDERS
4.	Debarment and Suspension Certification for Prime Contractors	At Time of Bid	ALL BIDDERS
5.	Debarment and Suspension Certification for Subcontractors, Suppliers & Mfgrs	At Time of Bid	ALL BIDDERS
6.	Bid Bond (Original)	By 5PM 1 working day after bid opening	ALL BIDDERS
7.	SLBE Good Faith Effort Documentation	By 5 PM 3 working days after bid opening	ALL BIDDERS
8.	Form AA60 – List of Work Made Available	By 5 PM 3 working days after bid opening with Good Faith Effort (GFE) documentation	ALL BIDDERS
9.	If the Contractor is a Joint Venture: • Joint Venture Agreement • Joint Venture License	Within 10 working days of receipt by bidder of contract forms	AWARDED BIDDER
10.	Payment & Performance Bond; Certificates of Insurance & Endorsements; and Signed Contract Agreement Page	Within 10 working days of receipt by bidder of contract forms and NOI	AWARDED BIDDER
11.	Listing of "Other Than First Tier" Subcontractors	Within 10 working days of receipt by bidder of contract forms	AWARDED BIDDER

ITEM	DOCUMENT TO BE SUBMITTED	WHEN DUE	FROM
12.	PLA Forms, See Attachment F	Within 10 working days of NOI	AWARDED BIDDER

NOTICE INVITING BIDS

1. **SUMMARY OF WORK:** This is the City of San Diego's (City) solicitation process to acquire Construction services for **Pure Water Program (PWP) Central Area Small-Scale Facility.** For additional information refer to Attachment A.

2. **FULL AND OPEN COMPETITION:** This solicitation is subject to full and open competition and may be bid by Contractors on the City's approved Prequalified Contractors List. For information regarding the Contractors Prequalified list visit the City's web site: http://www.sandiego.gov.

3. **ESTIMATED CONSTRUCTION COST:** The City's estimated construction cost for this project is **$34,510,000**.

4. **BID DUE DATE AND TIME ARE: DECEMBER 7, 2022** at **2:00 PM**

5. **PREVAILING WAGE RATES APPLY TO THIS CONTRACT:** Refer to Attachment D.

6. **LICENSE REQUIREMENT**: To be eligible for award of this contract, Prime contractor must possess the following licensing classification: **A**

7. **BUSINESS COOPERATION TAX PROGRAM.** You must exercise your right to obtain a California State of Board of Equalization (BOE) sub-permit for the jobsite and allocate all eligible Bradley-Burns Uniform Local Sales and Use Tax (Use Tax) to the City. In addition, you will ensure that all eligible subcontractors will exercise their right to obtain this BOE sub-submit and allocate all eligible Use Tax to the City. The City will not issue a notice to proceed unless you and your eligible subcontractors have obtained this sub-permit from the BOE. More information on obtaining this permit can be found by contacting the local BOE office.

8. **PROJECT LABOR AGREEMENT.** As a condition of final contract award, the Awarded Bidder must sign and execute a Letter of Assent to the Project Labor Agreement that the City has negotiated which is listed as Attachment A to the Project Labor Agreement. A copy of the Project Labor Agreement (PLA) is attached as Attachment F of this Contract Document. See also Attachment E SSP, Section 5-3.6, "Project Labor Agreement".

9. **SUBCONTRACTING PARTICIPATION PERCENTAGES**: Subcontracting participation percentages apply to this contract.

   9.1. The City has incorporated **mandatory** SLBE-ELBE subcontractor participation percentages to enhance competition and maximize subcontracting opportunities. For the purpose of achieving the mandatory subcontractor participation percentages, a recommended breakdown of the SLBE and ELBE subcontractor participation percentages based upon certified SLBE and ELBE firms has also been provided to achieve the mandatory subcontractor participation percentages:

   1. SLBE participation **4.1%**
   2. ELBE participation **7.5%**
   3. Total mandatory participation **11.6%**

9.2. The Bid may be declared non-responsive if the Bidder fails to meet the following requirements:

9.2.1. Include SLBE-ELBE certified subcontractors at the overall mandatory participation percentage identified in this document; OR

9.2.2. Submit Good Faith Effort (GFE) documentation, saved in searchable Portable Document Format (PDF), demonstrating the Bidder made a good faith effort to conduct outreach to and include SLBE-ELBE Subcontractors as required in this solicitation by 5 PM 3 Working Days after the Bid opening if the overall mandatory participation percentage is not met.

All submittals in searchable PDF shall be submitted electronically within the prescribed time identified in the contract documents via PlanetBids by invitation to the point of contact named in the bid provided by the Contract Specialist to all bidders.

10. **PRE-BID SITE VISIT:** All those wishing to submit a bid **MUST** visit the Work Site with the Engineer. The purpose of the Site visit is to acquaint Bidders with the Site conditions. To request a sign language or oral interpreter for this visit, call the Purchasing & Contracting Department, Public Works Division at (619) 533-3450 at least 5 Working Days prior to the meeting to ensure availability. Failure to attend the **Mandatory** Pre-Bid Site Visit may result in the Design-Builder's Bid being deemed non-responsive. The Pre-Bid Site Visit is scheduled as follows:

Time:	**10:00 AM**
Date:	**November 15, 2022**
Location:	**Point Loma Wastewater Treatment Plant** **1902 Gatchell Road, San Diego, California 92106**

Bidders may not be admitted after the specified start time of the mandatory Pre-Bid Site Visit.

11. **AWARD PROCESS:**

11.1. The Award of this contract is contingent upon the Contractor's compliance with all conditions of Award as stated within these documents and within the Notice of Intent to Award.

11.2. Upon acceptance of bids and determination of the apparent low bidder, the City will prepare the contract documents for execution within approximately 21 days of the date of the bid opening. The City will then award the contract upon receipt of properly signed Contract, bonds, and insurance documents.

11.3. This contract will be deemed executed and effective only upon the signing of the Contract by the Mayor or his designee and approval as to form by the City Attorney's Office.

11.4. The low Bid will be determined by the Base Bid.

11.5. Once the low bid has been determined, the City may, at its sole discretion, award the contract for the Base Bid alone.

12. SUBMISSION OF QUESTIONS:

12.1. The Director (or Designee) of the Purchasing & Contracting Department is the officer responsible for opening, examining, and evaluating the competitive Bids submitted to the City for the acquisition, construction and completion of any public improvement except when otherwise set forth in these documents. Any questions related to this solicitation shall be submitted to:

BFriedenreic@sandiego.gov

12.2. Questions received less than 14 days prior to the date for opening of Bids may not be considered.

12.3. Questions or clarifications deemed by the City to be material shall be answered via issuance of an addendum and posted to the City's online bidding service.

12.4. Only questions answered by formal written addenda shall be binding. Oral and other interpretations or clarifications shall be without legal effect. It is the Bidder's responsibility to be informed of any addenda that have been issued and to include all such information in its Bid.

1. PREQUALIFICATION OF CONTRACTORS:

1.1. Contractors submitting a Bid must be pre-qualified for the total amount proposed, including all alternate items, prior to the date of submittal. Bids from contractors who have not been pre-qualified as applicable and Bids that exceed the maximum dollar amount at which contractors are pre-qualified may be deemed **non-responsive** and ineligible for award.

1.2. The completed application must be submitted online no later than 2 weeks prior to the bid opening.

1.3. **Joint Venture Bidders Cumulative Maximum Bidding Capacity:** For projects with an engineer's estimate of $30,000,000 or greater, Joint Ventures submitting bids may be deemed responsive and eligible for award if the cumulative maximum bidding capacity of the individual Joint Venture entities is equal to or greater than the total amount proposed.

1.3.1. Each of the entities of the Joint Venture must have been previously prequalified at a minimum of $15,000,000.

1.3.2. Bids submitted with a total amount proposed of less than $30,000,000 are not eligible for Cumulative Maximum Bidding Capacity prequalification. To be eligible for award in this scenario, the Joint Venture itself or at least one of the Joint Venture entities must have been prequalified for the total amount proposed.

1.3.3. Bids submitted by Joint Ventures with a total amount proposed of $30,000,000 or greater on a project with an engineer's estimate of less than $30,000,000 are not eligible for Cumulative Maximum Bidding Capacity prequalification.

1.3.4. The Joint Venture designated as the Apparent Low Bidder shall provide evidence of its corporate existence and furnish good and approved bonds in the name of the Joint Venture within 14 Calendar Days of receipt by the Bidder of a form of contract for execution.

1.4. Complete information and links to the on-line prequalification application are available at:

http://www.sandiego.gov/cip/bidopps/prequalification

1.5. Due to the City's responsibility to protect the confidentiality of the contractors' information, City staff will not be able to provide information regarding contractors' prequalification status over the telephone. Contractors may access real-time information about their prequalification status via their vendor profile on PlanetBids™.

2. ELECTRONIC FORMAT RECEIPT AND OPENING OF BIDS: Bids will be received in electronic format (eBids) EXCLUSIVELY at the City of San Diego's electronic bidding (eBidding) site, at: http://www.sandiego.gov/cip/bidopps/index.shtml and are due by the date, and time shown on the cover of this solicitation.

2.1. BIDDERS MUST BE PRE-REGISTERED with the City's bidding system and possess a system-assigned Digital ID in order to submit an electronic bid.

2.2. The City's bidding system will automatically track information submitted to the site including IP addresses, browsers being used and the URLs from which information was submitted. In addition, the City's bidding system will keep a history of every login instance including the time of login, and other information about the user's computer configuration such as the operating system, browser type, version, and more. Because of these security features, Contractors who disable their browsers' cookies will not be able to log in and use the City's bidding system.

2.3. The City's electronic bidding system is responsible for bid tabulations. Upon the bidder's or proposer's entry of their bid, the system will ensure that all required fields are entered. **The system will not accept a bid for which any required information is missing.** This includes all necessary pricing, subcontractor listing(s) and any other essential documentation and supporting materials and forms requested or contained in these solicitation documents.

2.4. BIDS REMAIN SEALED UNTIL BID DEADLINE. eBids are transmitted into the City's bidding system via hypertext transfer protocol secure (https) mechanism using SSL 128-256 bit security certificates issued from Verisign/Thawte which encrypts data being transferred from client to server. Bids submitted prior to the "Bid Due Date and Time" are not available for review by anyone other than the submitter who has until the "Bid Due Date and Time" to change, rescind or retrieve its proposal should it desire to do so.

2.5. BIDS MUST BE SUBMITTED BY BID DUE DATE AND TIME. Once the bid deadline is reached, no further submissions are accepted into the system. Once the Bid Due Date and Time has lapsed, bidders, proposers, the general public, and City staff are able to immediately see the results online. City staff may then begin reviewing the submissions for responsiveness, EOCP compliance and other issues. The City may require any Bidder to furnish statement of experience, financial responsibility, technical ability, equipment, and references.

2.6. RECAPITULATION OF THE WORK. Bids shall not contain any recapitulation of the Work. Conditional Bids may be rejected as being non-responsive. Alternative proposals will not be considered unless called for.

2.7. **BIDS MAY BE WITHDRAWN** by the Bidder only up to the bid due date and time.

2.7.1. Important Note: Submission of the electronic bid into the system may not be instantaneous. Due to the speed and capabilities of the user's internet service provider (ISP), bandwidth, computer hardware and other variables, it may take time for the bidder's submission to upload and be received by the City's eBidding system. It is the bidder's sole responsibility to ensure their bids are received on time by the City's eBidding system. The City of San Diego is not responsible for bids that do not arrive by the required date and time.

2.8. **ACCESSIBILITY AND AMERICANS WITH DISABILITIES ACT (ADA) COMPLIANCE:** To request a copy of this solicitation in an alternative format, contact the Purchasing & Contracting Department, Public Works Division Contract Specialist listed on the cover of this solicitation at least five (5) working days prior to the Bid/Proposal due date to ensure availability.

3. ELECTRONIC BID SUBMISSIONS CARRY FULL FORCE AND EFFECT:

3.1. The bidder, by submitting its electronic bid, acknowledges that doing so carries the same force and full legal effect as a paper submission with a longhand (wet) signature.

3.2. By submitting an electronic bid, the bidder certifies that the bidder has thoroughly examined and understands the entire Contract Documents (which consist of the plans and specifications, drawings, forms, affidavits and the solicitation documents), and that by submitting the eBid as its bid proposal, the bidder acknowledges, agrees to and is bound by the entire Contract Documents, including any addenda issued thereto, and incorporated by reference in the Contract Documents.

3.3. The Bidder, by submitting its electronic bid, agrees to and certifies under penalty of perjury under the laws of the State of California, that the certification, forms and affidavits submitted as part of this bid are true and correct.

3.4. The Bidder agrees to the construction of the project as described in Attachment "A–Scope of Work" for the City of San Diego, in accordance with the requirements set forth herein for the electronically submitted prices. The Bidder guarantees the Contract Price for a period of 120 days from the date of Bid opening. The duration of the Contract Price guarantee shall be extended by the number of days required for the City to obtain all items necessary to fulfill all conditions precedent.

4. **BIDS ARE PUBLIC RECORDS:** Upon receipt by the City, Bids shall become public records subject to public disclosure. It is the responsibility of the respondent to clearly identify any confidential, proprietary, trade secret or otherwise legally privileged information contained within the Bid. General references to sections of the California Public Records Act (PRA) will not suffice. If the Contractor does not provide applicable case law that clearly establishes that the requested information is exempt from the disclosure requirements of the PRA, the City

shall be free to release the information when required in accordance with the PRA, pursuant to any other applicable law, or by order of any court or government agency, and the Contractor will hold the City harmless for release of this information.

5. CONTRACTOR REGISTRATION AND ELECTRONIC REPORTING SYSTEM:

5.1. **Prior** to the Award of the Contract or Task Order, you and your Subcontractors and Suppliers must register with the City's web-based vendor registration and bid management system. For additional information go to:

http://www.sandiego.gov/purchasing/bids-contracts/vendorreg

5.2. The City may not award the contract until registration of all subcontractors and suppliers is complete. In the event this requirement is not met within the time frame specified in the Notice of Intent to Award letter, the City reserves the right to rescind the Notice of Award / Intent to Award and to make the award to the next responsive and responsible bidder / proposer.

6. JOINT VENTURE CONTRACTORS: Provide a copy of the Joint Venture agreement and the Joint Venture license to the City within 14 Calendar Days after receiving the Contract forms.

7. INSURANCE REQUIREMENTS:

7.1. All certificates of insurance and endorsements required by the contract are to be provided upon issuance of the City's Notice of Intent to Award letter.

7.2. Refer to sections 5-4, "INSURANCE" of the Supplementary Special Provisions (SSP) for the insurance requirements which must be met.

8. REFERENCE STANDARDS: Except as otherwise noted or specified, the Work shall be completed in accordance with the following standards:

Title	Edition	Document Number
Standard Specifications for Public Works Construction ("The GREENBOOK") http://www.greenbookspecs.org/	2021	ECPI010122-01
City of San Diego Standard Specifications for Public Works Construction ("The WHITEBOOK")* https://www.sandiego.gov/ecp/edocref/greenbook	2021	ECPI010122-02
City of San Diego Standard Drawings* https://www.sandiego.gov/ecp/edocref/standarddraw	2021	ECPI010122-03
Citywide Computer Aided Design and Drafting (CADD) Standards https://www.sandiego.gov/ecp/edocref/drawings	2018	PWPI010119-04
California Department of Transportation (CALTRANS) Standard Specifications https://dot.ca.gov/programs/design/ccs-standard-plans-and-standard-specifications	2018	PWPI030119-05

Title	Edition	Document Number
CALTRANS Standard Plans https://dot.ca.gov/programs/design/ccs-standard-plans-and-standard-specifications	2018	PWPI030119-06
California Manual on Uniform Traffic Control Devices Revision 6 (CA MUTCD Rev 6) https://dot.ca.gov/programs/safety-programs/camutcd/camutcd-files	2014	PWPI060121-10
NOTE: *Available online under Engineering Documents and References at: https://www.sandiego.gov/ecp/edocref/ ***Electronic updates to the Standard Drawings may also be found in the link above		

9. **CITY'S RESPONSES AND ADDENDA:** The City, at its discretion, may respond to any or all questions submitted in writing via the City's eBidding web site in the **form of an addendum**. No other responses to questions, oral or written shall be of any force or effect with respect to this solicitation. The changes to the Contract Documents through addenda are made effective as though originally issued with the Bid. The Bidders shall acknowledge the receipt of Addenda at the time of bid submission.

10. **CITY'S RIGHTS RESERVED:** The City reserves the right to cancel the Notice Inviting Bids at any time, and further reserves the right to reject submitted Bids, without giving any reason for such action, at its sole discretion and without liability. Costs incurred by the Bidder(s) as a result of preparing Bids under the Notice Inviting Bids shall be the sole responsibility of each bidder. The Notice Inviting Bids creates or imposes no obligation upon the City to enter a contract.

11. **CONTRACT PRICING:** This solicitation is for a Lump Sum contract with Unit Price provisions as set forth herein. The Bidder agrees to perform construction services for the City of San Diego in accordance with these contract documents for the prices listed below. The Bidder further agrees to guarantee the Contract Price for a period of 120 days from the date of Bid opening. The duration of the Contract Price guarantee may be extended, by mutual consent of the parties, by the number of days required for the City to obtain all items necessary to fulfill all contractual conditions.

12. **SUBCONTRACTOR INFORMATION:**

12.1. **LISTING OF SUBCONTRACTORS**. In accordance with the requirements provided in the "Subletting and Subcontracting Fair Practices Act" of the California Public Contract Code, the Bidder shall provide the **NAME** and **ADDRESS** of each Subcontractor who will perform work, labor, render services or who specially fabricates and installs a portion [type] of the work or improvement, in an amount in excess of 0.5% of the Contractor's total Bid. The Bidder shall also state within the description, whether the subcontractor is a **CONSTRUCTOR**, **CONSULTANT** or **SUPPLIER**. The Bidder shall state the **DIR REGISTRATION NUMBER** for all subcontractors and shall further state within the description, the **PORTION** of the work which will be performed by each subcontractor under this Contract. The Contractor shall list only one Subcontractor for each portion of the Work. The **DOLLAR VALUE** of the total Bid to be performed shall be stated for all subcontractors listed. Failure to comply with this requirement may result in the Bid being rejected as **non-responsive** and ineligible for award. The Bidder's attention is directed to the Special Provisions – Section 3-2, "Self-Performance", which stipulates the percent of the Work to be performed with the

Bidders' own forces. The Bidder shall list all SLBE, ELBE, DBE, DVBE, MBE, WBE, OBE, SDB, WoSB, HUBZone, and SDVOSB Subcontractors for which Bidders are seeking recognition towards achieving any mandatory, voluntary (or both) subcontracting participation goals.

Additionally, pursuant to California Senate Bill 96 and in accordance with the requirements of Labor Code sections 1771.1 and 1725.5, by submitting a bid or proposal to the City, Contractor is certifying that he or she has verified that all subcontractors used on this public work project are registered with the California Department of Industrial Relations (DIR). **The Bidder shall provide the name, address, license number, DIR registration number of any Subcontractor – regardless of tier** - who will perform work, labor, render services or specially fabricate and install a portion [type] of the work or improvement pursuant to the contract.

12.2. **LISTING OF SUPPLIERS.** Any Bidder seeking the recognition of Suppliers of equipment, materials, or supplies obtained from third party Suppliers towards achieving any mandatory or voluntary (or both) subcontracting participation goals shall provide, at a minimum, the **NAME**, **LOCATION (CITY), DIR REGISTRATION NUMBER** and the **DOLLAR VALUE** of each supplier. The Bidder will be credited up to 60% of the amount to be paid to the Suppliers for materials and supplies unless vendor manufactures or substantially alters materials and supplies, in which case, 100% will be credited. The Bidder is to indicate within the description whether the listed firm is a supplier or manufacturer. If no indication is provided, the listed firm will be credited at 60% of the listed dollar value for purposes of calculating the Subcontractor Participation Percentage.

12.3. **LISTING OF SUBCONTRACTORS OR SUPPLIERS FOR ALTERNATES.** For subcontractors or suppliers to be used on alternate items, bidder shall use the provided "Subcontractors For Alternates" form and shall indicate for each alternate subcontract whether it is an additive or deductive alternate; the subcontractor's name, location, phone number, email address, CA license number, and DIR registration number; whether the subcontractor is a designer, constructor or supplier; the type of work the subcontractor will be performing; and the dollar value of the subcontract for that alternate item. Failure to comply with this requirement may result in the bid being rejected as nonresponsive and ineligible for award.

13. **SUBMITTAL OF "OR EQUAL" ITEMS:** See Section 4-6, "Trade Names" in The WHITEBOOK and as amended in the SSP.

14. **AWARD:**

14.1. The Award of this contract is contingent upon the Contractor's compliance with all conditions precedent to Award.

14.2. Upon acceptance of a Bid, the City will prepare contract documents for execution within approximately 21 days of the date of the Bid opening and award the Contract approximately within 7 days of receipt of properly executed Contract, bonds, and insurance documents.

14.3. This contract will be deemed executed and effective only upon the signing of the Contract by the Mayor or his designee and approval as to form the City Attorney's Office.

15. **SUBCONTRACT LIMITATIONS**: The Bidder's attention is directed to Standard Specifications for Public Works Construction, Section 3-2, "SELF-PERFORMANCE" in The GREENBOOK and as amended in the SSP which requires the Contractor to self-perform not less than the specified amount. Failure to comply with this requirement shall render the bid **non-responsive** and ineligible for award.

16. **AVAILABILITY OF PLANS AND SPECIFICATIONS:** Contract Documents may be obtained by visiting the City's website: http://www.sandiego.gov/cip/. Plans and Specifications for this contract are also available for review in the office of the City Clerk or Purchasing & Contracting Department, Public Works Division.

17. **ONLY ONE BID PER CONTRACTOR SHALL BE ACCCEPTED:** No person, firm, or corporation shall be allowed to make, file, or be interested in more than one (1) Bid for the same work unless alternate Bids are called for. A person, firm or corporation who has submitted a sub-proposal to a Bidder, or who has quoted prices on materials to a Bidder, is not hereby disqualified from submitting a sub-proposal or quoting prices to other Bidders or from submitting a Bid in its own behalf. Any Bidder who submits more than one bid will result in the rejection of all bids submitted.

18. **SAN DIEGO BUSINESS TAX CERTIFICATE:** The Contractor and Subcontractors, not already having a City of San Diego Business Tax Certificate for the work contemplated shall secure the appropriate certificate from the City Treasurer, Civic Center Plaza, First floor and submit to the Contract Specialist upon request or as specified in the Contract Documents. Tax Identification numbers for both the Bidder and the listed Subcontractors must be submitted on the City provided forms within these documents.

19. **BIDDER'S GUARANTEE OF GOOD FAITH (BID SECURITY) FOR DESIGN-BID-BUILD CONTRACTS:**

19.1. For bids $250,000 and above, bidders shall submit Bid Security at bid time. Bid Security shall be in one of the following forms: a cashier's check, or a properly certified check upon some responsible bank; or an approved corporate surety bond payable to the City of San Diego for an amount of not less than 10% of the total bid amount.

19.2. This check or bond, and the monies represented thereby, will be held by the City as a guarantee that the Bidder, if awarded the contract, will in good faith enter into the contract and furnish the required final performance and payment bonds.

19.3. The Bidder agrees that in the event of the Bidder's failure to execute this contract and provide the required final bonds, the money represented by the cashier's or certified check will remain the property of the City; and the Surety agrees that it will pay to the City the damages, not exceeding the sum of 10% of the amount of the Bid, that the City may suffer as a result of such failure.

19.4. At the time of bid submission, bidders must upload and submit an electronic PDF copy of the aforementioned bid security. Whether in the form of a cashier's check, a properly certified check or an approved corporate surety bond payable to the City of San Diego, the bid security must be uploaded to the City's eBidding system. By 5PM, 1 working day after the bid opening date, all bidders must provide the City with the original bid security.

19.5. Failure to submit the electronic version of the bid security at the time of bid submission AND failure to provide the original by 5PM, 1 working day after the bid opening date shall cause the bid to be rejected and deemed **non-responsive**.

Original Bid Bond shall be submitted to:
Purchasing & Contracting Department, Public Works Division
1200 3rd Ave., Suite 200, MS 56P
San Diego, California, 92101
To the Attention of the Contract Specialist on the Front Page of this solicitation.

20. AWARD OF CONTRACT OR REJECTION OF BIDS:

20.1. This contract may be awarded to the lowest responsible and reliable Bidder.

20.2. Bidders shall complete ALL eBid forms as required by this solicitation. Incomplete eBids will not be accepted.

20.3. The City reserves the right to reject any or all Bids, to waive any informality or technicality in Bids received, and to waive any requirements of these specifications as to bidding procedure.

20.4. Bidders will not be released on account of their errors of judgment. Bidders may be released only upon receipt by the City within 3 Working Days of the bid opening, written notice from the Bidder which shows proof of honest, credible, clerical error of a material nature, free from fraud or fraudulent intent; and of evidence that reasonable care was observed in the preparation of the Bid.

20.5. A bidder who is not selected for contract award may protest the award of a contract to another bidder by submitting a written protest in accordance with the San Diego Municipal Code.

20.6. The City of San Diego will not discriminate in the award of contracts with regard to race, religion creed, color, national origin, ancestry, physical handicap, marital status, sex or age.

20.7. Each Bid package properly signed as required by these specifications shall constitute a firm offer which may be accepted by the City within the time specified herein.

20.8. The City reserves the right to evaluate all Bids and determine the lowest Bidder on the basis of the base bid and any proposed alternates or options as detailed herein.

21. BID RESULTS:

21.1. The availability of the bids on the City's eBidding system shall constitute the public announcement of the apparent low bidder. In the event that the apparent low bidder is subsequently deemed non-responsive or non-responsible, a notation of such will be made on the eBidding system. The new ranking and apparent low bidder will be adjusted accordingly.

21.2. To obtain the bid results, view the results on the City's web site, or request the results by U.S. mail and provide a self-addressed, stamped envelope. If requesting by mail, be sure to reference the bid name and number. The bid tabulations will be mailed to you upon their completion. The results will not be given over the telephone.

22. THE CONTRACT:

22.1. The Bidder to whom award is made shall execute a written contract with the City of San Diego and furnish good and approved bonds and insurance certificates specified by the City within 14 days after receipt by Bidder of a form of contract for execution unless an extension of time is granted to the Bidder in writing.

22.2. If the Bidder takes longer than 14 days to fulfill these requirements, then the additional time taken shall be added to the Bid guarantee. The Contract shall be made in the form adopted by the City, which includes the provision that no claim or suit whatsoever shall be made or brought by Contractor against any officer, agent, or employee of the City for or on account of anything done or omitted to be done in connection with this contract, nor shall any such officer, agent, or employee be liable hereunder.

22.3. If the Bidder to whom the award is made fails to enter into the contract as herein provided, the award may be annulled and the Bidder's Guarantee of Good Faith will be subject to forfeiture. An award may be made to the next lowest responsible and reliable Bidder who shall fulfill every stipulation embraced herein as if it were the party to whom the first award was made.

22.4. Pursuant to the San Diego City Charter section 94, the City may only award a public works contract to the lowest responsible and reliable Bidder. The City will require the Apparent Low Bidder to (i) submit information to determine the Bidder's responsibility and reliability, (ii) execute the Contract in form provided by the City, and (iii) furnish good and approved bonds and insurance certificates specified by the City within 14 Days, unless otherwise approved by the City, in writing after the Bidder receives notification from the City, designating the Bidder as the Apparent Low Bidder and formally requesting the above mentioned items.

22.5. The award of the Contract is contingent upon the satisfactory completion of the above-mentioned items and becomes effective upon the signing of the Contract by the Mayor or designee and approval as to form by the City Attorney's Office. If the Apparent Low Bidder does not execute the Contract or submit required documents and information, the City may award the Contract to the next lowest responsible and reliable Bidder

who shall fulfill every condition precedent to award. A corporation designated as the Apparent Low Bidder shall furnish evidence of its corporate existence and evidence that the officer signing the Contract and bond for the corporation is duly authorized to do so.

23. EXAMINATION OF PLANS, SPECIFICATIONS, AND SITE OF WORK: The Bidder shall examine carefully the Project Site, the Plans and Specifications, other materials as described in the Special Provisions, Section 3-9, "TECHNICAL STUDIES AND SUBSURFACE DATA", and the proposal forms (e.g., Bidding Documents). The submission of a Bid shall be conclusive evidence that the Bidder has investigated and is satisfied as to the conditions to be encountered, as to the character, quality, and scope of work, the quantities of materials to be furnished, and as to the requirements of the Bidding Documents Proposal, Plans, and Specifications.

24. CITY STANDARD PROVISIONS: This contract is subject to the following standard provisions. See The WHITEBOOK for details.

24.1. The City of San Diego Resolution No. R-277952 adopted on May 20, 1991 for a Drug-Free Workplace.

24.2. The City of San Diego Resolution No. R-282153 adopted on June 14, 1993 related to the Americans with Disabilities Act.

24.3. The City of San Diego Municipal Code §22.3004 for Contractor Standards.

24.4. The City of San Diego's Labor Compliance Program and the State of California Labor Code §§1771.5(b) and 1776.

24.5. Sections 1777.5, 1777.6, and 1777.7 of the State of California Labor Code concerning the employment of apprentices by contractors and subcontractors performing public works contracts.

24.6. The City's Equal Benefits Ordinance (EBO), Chapter 2, Article 2, Division 43 of The San Diego Municipal Code (SDMC).

24.7. The City's Information Security Policy (ISP) as defined in the City's Administrative Regulation 90.63.

25. PRE-AWARD ACTIVITIES:

25.1. The contractor selected by the City to execute a contract for this Work shall submit the required documentation as specified herein and in the Notice of Intent to Award. Failure to provide the information as specified may result in the Bid being rejected as **non-responsive.**

25.2. The decision that bid is non-responsive for failure to provide the information required within the time specified shall be at the sole discretion of the City.

PERFORMANCE BOND, LABOR AND MATERIALMEN'S BOND

FAITHFUL PERFORMANCE BOND AND LABOR AND MATERIALMEN'S BOND:

J.R. Filanc Construction Co., Inc., a corporation, as principal, and Travelers Casualty and Surety Company of America, a corporation authorized to do business in the State of California, as Surety, hereby obligate themselves, their successors and assigns, jointly and severally, to The City of San Diego a municipal corporation in the sum of **THIRTY EIGHT MILLION FOUR HUNDRED THIRTY ONE THOUSAND THREE HUNDRED THIRTY ONE DOLLARS ($38,431,331)** for the faithful performance of the annexed contract, and in the sum of **THIRTY EIGHT MILLION FOUR HUNDRED THIRTY ONE THOUSAND THREE HUNDRED THIRTY ONE DOLLARS ($38,431,331)** for the benefit of laborers and materialmen designated below.

Conditions:

If the Principal shall faithfully perform the annexed contract with the City of San Diego, California, then the obligation herein with respect to a faithful performance shall be void; otherwise it shall remain in full force.

If the Principal shall promptly pay all persons, firms and corporations furnishing materials for or performing labor in the execution of this contract, and shall pay all amounts due under the California Unemployment Insurance Act then the obligation herein with respect to laborers and materialmen shall be void; otherwise it shall remain in full force.

The obligation herein with respect to laborers and materialmen shall inure to the benefit of all persons, firms and corporations entitled to file claims under the provisions of Article 2. Claimants, (iii) public works of improvement commencing with Civil Code Section 9100 of the Civil Code of the State of California.

Changes in the terms of the annexed contract or specifications accompanying same or referred to therein shall not affect the Surety's obligation on this bond, and the Surety hereby waives notice of same.

The Surety shall pay reasonable attorney's fees should suit be brought to enforce the provisions of this bond.

The Surety expressly agrees that the City of San Diego may reject any contractor or subcontractor which may be proposed by Surety in fulfillment of its obligations in the event of default by the Principal.

The Surety shall not utilize the Principal in completing the improvements and work specified in the Agreement in the event the City terminates the Principal for default.

PERFORMANCE BOND, LABOR AND MATERIALMEN'S BOND (continued)

THE CITY OF SAN DIEGO

By: _____

Print Name: Alia Khouri
Deputy Chief Operating Officer
Purchasing & Contracting Dept.

Date: 06/27/2023

APPROVED AS TO FORM

Mara W. Elliott, City Attorney

By: _____

Print Name: Elizabeth Cason
Deputy City Attorney

Date: June 28, 2023

CONTRACTOR J.R. Filanc Construction Company, Inc.

By: _____

Print Name: Omar Rodea, President

Date: Feb. 14, 2023

SURETY Travelers Casualty and Surety Company of America

By: _____
Attorney-In-Fact

Print Name: Lawrence F. McMahon

Date: February 10, 2023

21688 Gateway Center Drive, Diamond Bar, CA 91765
Local Address of Surety

(909) 612-3675
Local Phone Number of Surety

$222,147.00* *Subject to adjustment based on final contract price
Premium

107731903
Bond Number

ACKNOWLEDGMENT

A notary public or other officer completing this certificate verifies only the identity of the individual who signed the document to which this certificate is attached, and not the truthfulness, accuracy, or validity of that document.

State of California
County of San Diego)

On February 10, 2023 before me, Minna Huovila, Notary Public
(insert name and title of the officer)

personally appeared Lawrence F. McMahon,
who proved to me on the basis of satisfactory evidence to be the person(s) whose name(s) is/are subscribed to the within instrument and acknowledged to me that he/she/they executed the same in his/her/their authorized capacity(ies), and that by his/her/their signature(s) on the instrument the person(s), or the entity upon behalf of which the person(s) acted, executed the instrument.

I certify under PENALTY OF PERJURY under the laws of the State of California that the foregoing paragraph is true and correct.

WITNESS my hand and official seal.

Signature _____ **(Seal)**

MINNA HUOVILA
COMM. #2313883
NOTARY PUBLIC-CALIFORNIA
SAN DIEGO COUNTY
My Commission Expires
DECEMBER 6, 2023

TRAVELERS	Travelers Casualty and Surety Company of America Travelers Casualty and Surety Company St. Paul Fire and Marine Insurance Company

POWER OF ATTORNEY

KNOW ALL MEN BY THESE PRESENTS: That Travelers Casualty and Surety Company of America, Travelers Casualty and Surety Company, and St. Paul Fire and Marine Insurance Company are corporations duly organized under the laws of the State of Connecticut (herein collectively called the "Companies"), and that the Companies do hereby make, constitute and appoint **LAWRENCE F MCMAHON** of **SAN DIEGO**, **California**, their true and lawful Attorney(s)-in-Fact to sign, execute, seal and acknowledge any and all bonds, recognizances, conditional undertakings and other writings obligatory in the nature thereof on behalf of the Companies in their business of guaranteeing the fidelity of persons, guaranteeing the performance of contracts and executing or guaranteeing bonds and undertakings required or permitted in any actions or proceedings allowed by law.

IN WITNESS WHEREOF, the Companies have caused this instrument to be signed, and their corporate seals to be hereto affixed, this **21st** day of **April, 2021**.

State of Connecticut

By: _____
Robert L. Raney, Senior Vice President

City of Hartford ss.

On this the **21st** day of **April, 2021**, before me personally appeared **Robert L. Raney**, who acknowledged himself to be the Senior Vice President of each of the Companies, and that he, as such, being authorized so to do, executed the foregoing instrument for the purposes therein contained by signing on behalf of said Companies by himself as a duly authorized officer.

IN WITNESS WHEREOF, I hereunto set my hand and official seal.

My Commission expires the **30th** day of **June, 2026**

_____
Anna P. Nowik, Notary Public

This Power of Attorney is granted under and by the authority of the following resolutions adopted by the Boards of Directors of each of the Companies, which resolutions are now in full force and effect, reading as follows:

RESOLVED, that the Chairman, the President, any Vice Chairman, any Executive Vice President, any Senior Vice President, any Vice President, any Second Vice President, the Treasurer, any Assistant Treasurer, the Corporate Secretary or any Assistant Secretary may appoint Attorneys-in-Fact and Agents to act for and on behalf of the Company and may give such appointee such authority as his or her certificate of authority may prescribe to sign with the Company's name and seal with the Company's seal bonds, recognizances, contracts of indemnity, and other writings obligatory in the nature of a bond, recognizance, or conditional undertaking, and any of said officers or the Board of Directors at any time may remove any such appointee and revoke the power given him or her; and it is

FURTHER RESOLVED, that the Chairman, the President, any Vice Chairman, any Executive Vice President, any Senior Vice President or any Vice President may delegate all or any part of the foregoing authority to one or more officers or employees of this Company, provided that each such delegation is in writing and a copy thereof is filed in the office of the Secretary; and it is

FURTHER RESOLVED, that any bond, recognizance, contract of indemnity, or writing obligatory in the nature of a bond, recognizance, or conditional undertaking shall be valid and binding upon the Company when (a) signed by the President, any Vice Chairman, any Executive Vice President, any Senior Vice President or any Vice President, any Second Vice President, the Treasurer, any Assistant Treasurer, the Corporate Secretary or any Assistant Secretary and duly attested and sealed with the Company's seal by a Secretary or Assistant Secretary; or (b) duly executed (under seal, if required) by one or more Attorneys-in-Fact and Agents pursuant to the power prescribed in his or her certificate or their certificates of authority or by one or more Company officers pursuant to a written delegation of authority; and it is

FURTHER RESOLVED, that the signature of each of the following officers: President, any Executive Vice President, any Senior Vice President, any Vice President, any Assistant Vice President, any Secretary, any Assistant Secretary, and the seal of the Company may be affixed by facsimile to any Power of Attorney or to any certificate relating thereto appointing Resident Vice Presidents, Resident Assistant Secretaries or Attorneys-in-Fact for purposes only of executing and attesting bonds and undertakings and other writings obligatory in the nature thereof, and any such Power of Attorney or certificate bearing such facsimile signature or facsimile seal shall be valid and binding upon the Company and any such power so executed and certified by such facsimile signature and facsimile seal shall be valid and binding on the Company in the future with respect to any bond or understanding to which it is attached.

I, **Kevin E. Hughes**, the undersigned, Assistant Secretary of each of the Companies, do hereby certify that the above and foregoing is a true and correct copy of the Power of Attorney executed by said Companies, which remains in full force and effect.

Dated this 10th day of February, 2023.

_____
Kevin E. Hughes, Assistant Secretary

To verify the authenticity of this Power of Attorney, please call us at 1-800-421-3880.
Please refer to the above-named Attorney(s)-in-Fact and the details of the bond to which this Power of Attorney is attached.

ATTACHMENTS

ATTACHMENT A

SCOPE OF WORK

SCOPE OF WORK

1. **SCOPE OF WORK:** The work consists of providing a new water purification demonstration facility named "Central Area Small-Scale Facility" including but not limited to, processes, structures, and systems as listed below: 1) Process Facilities including: a. Primary influent and primary effluent feed pumps, b. Blend tank, c. Biological Nutrient Removal (BNR) system, d. Membrane bioreactor (MBR) system, e. ozone treatment, f. Biological activated carbon filtration, g. Membrane filtration, h. Reverse osmosis, i. Ultraviolet/Advanced oxidation process, 2) Support Systems including: a. Chemical storage and delivery systems, b. Electrical and control, 3) Perform site work including, but not limited to, grading: new pavement, and yard piping.

1.1. The Work shall be performed in accordance with:

1.1.1. The Notice Inviting Bids and Plans numbered **0100179-01-D** through **0100179-264-D**, inclusive.

For Plans numbered **0100179-01-D** through **0100179-264-D**, refer to the link below:

https://drive.google.com/drive/folders/1FeRjNiSCKq9bGiegnHVekDG2e-s6oiZz

2. **LOCATION OF WORK:** The location of the Work is as follows:

See **Appendix E – Location Map.**

3. **CONTRACT TIME:** The Contract Time for completion of the Work shall be **340 Working Days** which include **50 Working Days** for Project Acceptance.

ATTACHMENT B

RESERVED

ATTACHMENT C

EQUAL OPPORTUNITY CONTRACTING PROGRAM

EQUAL OPPORTUNITY CONTRACTING PROGRAM (EOCP)

SECTION A - GENERAL REQUIREMENTS

A. INTRODUCTION.

1. This document sets forth the following specifications:
   a) The City's general EOCP requirements for all Construction Contracts.
   b) Special Provisions for Contracts subject to SLBE and ELBE requirements only.
2. Additional requirements may apply for state or federally funded projects.
3. These requirements shall be included as Contract provisions for all Subcontracts.
4. The City specified forms, instructions, and guides are available for download from the EOCP's web site at: http://www.sandiego.gov/eoc/forms/index.shtml

B. GENERAL.

1. The City of San Diego promotes equal employment and subcontracting opportunities.
2. The City is committed to ensuring that taxpayer dollars spent on public Contracts are not paid to businesses that practice discrimination in employment or subcontracting.
3. The City encourages all companies seeking to do business with the City to share this commitment.

C. DEFINITIONS.

1. For the purpose of these requirements: Terms "Bid" and "Proposal", "Bidder" and "Proposer", "Subcontractor" and "Subconsultant", "Contractor" and "Consultant", "Contractor" and "Prime Contractor", "Consultant" and "Professional Service Provider", "Suppliers" and "Vendors", "Suppliers" and "Dealers", and "Suppliers" and "Manufacturers" may have been used interchangeably.
2. The following definitions apply:
   a) **Emerging Business Enterprise (EBE)** - A for-profit business that is independently owned and operated; that is not a subsidiary or franchise of another business and whose gross annual receipts do not exceed the amount set by the City Manager and that meets all other criteria set forth in regulations implementing Municipal Code Chapter 2, Article 2, Division 36. The City Manager shall review the threshold amount for EBEs on an annual basis and adjust as necessary to reflect changes in the marketplace.
   b) **Emerging Local Business Enterprise (ELBE)** - A Local Business Enterprise that is also an Emerging Business Enterprise.

c) **Minority Business Enterprise (MBE)** - A certified business that is at least fifty-one percent (51%) owned by one or more minority individuals, or, in the case of a publicly owned business at least fifty-one percent (51%) of the stock is owned by one or more minority individuals; and (2) whose daily business operations are managed and directed by one or more minorities owners. Minorities include the groups with the following ethnic origins: African, Asian Pacific, Asian Subcontinent, Hispanic, Native Alaskan, Native American, and Native Hawaiian.

d) **Women Business Enterprise (WBE)** - A certified business that is at least fifty-one percent (51%) owned by a woman or women, or, in the case of a publicly owned business at least fifty-one percent (51%) of the stock is owned by one or more women; and (2) whose daily business operations are managed and directed by one or more women owners.

e) **Disadvantaged Business Enterprise (DBE)** - a certified business that is at least fifty-one percent (51%) owned by socially and economically disadvantaged individuals, or, in the case of a publicly owned business at least fifty-one percent (51%) of the stock is owned by one or more socially and economically disadvantaged individuals; and (2) whose daily business operations are managed and directed by one or more socially and economically disadvantaged owners.

f) **Disabled Veteran Business Enterprise (DVBE)** - A certified business that is at least fifty-one percent (51%) owned by one or more disabled veterans; and (2) business operations must be managed and controlled by one or more disabled veterans. Disabled Veteran is a veteran of the U.S. military, naval, or air service; the veteran must have a service-connected disability of at least 10% or more; and the veteran must reside in California.

g) **Other Business Enterprise (OBE)** - Any business which does not otherwise qualify as a Minority, Woman, Disadvantaged, or Disabled Veteran Business Enterprise.

h) **Small Business Enterprise (SBE)** - A for-profit business that is independently owned and operated; that is not a subsidiary or franchise of another business and whose gross annual receipts do not exceed the amount set by the City Manager and that meets all other criteria set forth in regulations implementing Municipal Code Chapter 2, Article 2, Division 36. The City Manager shall review the threshold amount for SBEs on an annual basis and adjust as necessary to reflect changes in the marketplace. A business certified as a Micro Business (MB) or a Disabled Veteran Business Enterprise (DVBE) by the State of California and that has provided proof of such certification to the City Manager shall be deemed to be an SBE.

i) **Small Local Business Enterprise (SLBE)** - A Local Business Enterprise that is also a Small Business Enterprise.

D. CITY'S EQUAL OPPORTUNITY COMMITMENT.

1. Nondiscrimination in Contracting Ordinance.

a) You, your Subcontractors, and Suppliers shall comply with the requirements of the City's Nondiscrimination in Contracting Ordinance, San Diego Municipal Code §§22.3501 through 22.3517.

You shall not discriminate on the basis of race, gender, gender expression, gender identity, religion, national origin, ethnicity, sexual orientation, age, or disability in the solicitation, selection, hiring, or treatment of subcontractors, vendors, or suppliers. You shall provide equal opportunity for Subcontractors to participate in subcontracting opportunities. You understand and agree that the violation of this clause shall be considered a material breach of the Contract and may result in Contract termination, debarment, or other sanctions.

You shall include the foregoing clause in all Contracts between you and your Subcontractors and Suppliers.

b) **Disclosure of Discrimination Complaints.** As part of its Bid or Proposal, you shall provide to the City a list of all instances within the past 10 years where a complaint was filed or pending against you in a legal or administrative proceeding alleging that you discriminated against your employees, Subcontractors, vendors, or suppliers, and a description of the status or resolution of that complaint, including any remedial action taken.

c) Upon the City's request, You agree to provide to the City, within 60 Calendar Days, a truthful and complete list of the names of all Subcontractors and Suppliers that you have used in the past 5 years on any of your Contracts that were undertaken within the San Diego County, including the total dollar amount paid by you for each Subcontract or supply Contract.

d) You further agree to fully cooperate in any investigation conducted by the City pursuant to the City's Nondiscrimination in Contracting Ordinance, Municipal Code §§22.3501 through 22.3517. You understand and agree that violation of this clause shall be considered a material breach of the Contract and may result in remedies being ordered against you up to and including contract termination, debarment, and other sanctions for the violation of the provisions of the Nondiscrimination in Contracting Ordinance. You further understand and agree that the procedures, remedies, and sanctions provided for in the Nondiscrimination in Contracting Ordinance apply only to violations of the Ordinance.

E. EQUAL EMPLOYMENT OPPORTUNITY OUTREACH PROGRAM.

1. You, your Subcontractors, and Suppliers shall comply with the City's Equal Employment Opportunity Outreach Program, San Diego Municipal Code §§22.2701 through 22.2707.

   You shall not discriminate against any employee or applicant for employment on any basis prohibited by law. You shall provide equal opportunity in all employment practices. You shall ensure that your Subcontractors comply with this program. Nothing in this section shall be interpreted to hold you liable for any discriminatory practices of your Subcontractors.

   You shall include the foregoing clause in all Contracts between you and your Subcontractors and Suppliers.

2. If the Contract is competitively solicited, the selected Bidder shall submit a Work Force Report (Form BB05) within 10 Working Days after receipt by the Bidder to the City for approval as specified in the Notice of Intent to Award letter.

3. The selected Bidder shall submit an Equal Employment Opportunity Plan if a Work Force Report is submitted and if the City determines that there are under-representations when compared to County Labor Force Availability data.

4. If the selected Bidder submits an Equal Employment Opportunity Plan, it shall include the following assurances:

   a) You shall maintain a working environment free of discrimination, harassment, intimidation, and coercion at all Sites and in all facilities at which your employees are assigned to Work.

   b) You shall review your EEO Policy annually with all on-Site supervisors involved in employment decisions.

   c) You shall disseminate and review your EEO Policy with all employees at least once a year, post the policy statement and EEO posters on all company bulletin boards and job sites, and document every dissemination, review, and posting with a written record to identify the time, place, employees present, subject matter, and disposition of meetings.

   d) You shall review, at least annually, all supervisors' adherence to and performance under the EEO Policy and maintain written documentation of these reviews.

   e) You shall discuss your EEO Policy Statement with Subcontractors with whom you anticipate doing business, including the EEO Policy Statement in your Subcontracts, and provide such documentation to the City upon request.

f) You shall document and maintain a record of all Bid solicitations and outreach efforts to and from Subcontractors, contractor associations, and other business associations.

g) You shall disseminate your EEO Policy externally through various media, including the media of people of color and women, in advertisements to recruit. Maintain files documenting these efforts and provide copies of these advertisements to the City upon request.

h) You shall disseminate your EEO Policy to union and community organizations.

i) You shall provide immediate written notification to the City when any union referral process has impeded your efforts to maintain your EEO Policy.

j) You shall maintain a current list of recruitment sources, including those outreaching to people of color and women, and provide written notification of employment opportunities to these recruitment sources with a record of the organizations' responses.

k) You shall maintain a current file of names, addresses and phone numbers of each walk-in applicant, including people of color and women, and referrals from unions, recruitment sources, or community organizations with a description of the employment action taken.

l) You shall encourage all present employees, including people of color and women employees, to recruit others.

m) You shall maintain all employment selection process information with records of all tests and other selection criteria.

n) You shall develop and maintain documentation for on-the-job training opportunities, participate in training programs, or both for all of your employees, including people of color and women, and establish apprenticeship, trainee, and upgrade programs relevant to your employment needs.

o) You shall conduct, at least annually, an inventory and evaluation of all employees for promotional opportunities and encourage all employees to seek and prepare appropriately for such opportunities.

p) You shall ensure that the company's working environment and activities are non-segregated except for providing separate or single-user toilets and necessary changing facilities to assure privacy between the sexes.

F. SUBCONTRACTING.

1. The City encourages all eligible business enterprises to participate in City contracts as a Contractor, Subcontractor, and joint venture partner with you, your Subcontractors, or your Suppliers. You are encouraged to take positive steps to diversify and expand your Subcontractor solicitation base and to offer

subcontracting opportunities to all eligible business firms including SLBEs, ELBEs, MBEs, WBEs, DBEs, DVBEs, and OBEs.

2. For Subcontractor participation level requirements, see the Contract Documents where applicable.

3. For the purposes of achieving the mandatory Subcontractor participation percentages, City percentage calculations will not account for the following:

   a) "Field Orders" and "City Contingency" Bid items.

   b) Alternate Bid items.

   c) Allowance Bid items designated as "EOC Type II".

4. Allowance Bid items designated as "EOC Type I" will be considered as part of the Base Bid and will be included in the percentage calculation.

5. Each joint venture partner shall be responsible for a clearly defined Scope of Work. In addition, an agreement shall be submitted and signed by all parties identifying the extent to which each joint venture partner shares in ownership, control, management, risk, and profits of the joint venture.

G. LISTS OF SUBCONTRACTORS AND SUPPLIERS.

1. You shall comply with the Subletting and Subcontracting Fair Practices Act, Public Contract Code §§4100 through 4113, inclusive.

2. You shall list all Subcontractors who will receive more than 0.5% of the total Bid amount or $10,000, whichever is greater on the form provided in the Contract Documents (Subcontractors list).

3. The Subcontractors list shall include the Subcontractor's name, telephone number including area code, physical address, Scope of Work, the dollar amount of the proposed Subcontract, the California contractor license number, the Public Works contractor registration number issued pursuant to Section 1725.5 of the Labor Code, and the Subcontractor's certification status with the name of the certifying agency.

4. The listed Subcontractor shall be appropriately licensed pursuant to Contractor License Laws.

5. For Design-Build Contracts, refer to the RFQ and RFP for each Project or Task Order.

H. SUBCONTRACTOR AND SUPPLIER SUBSTITUTIONS.

1. Listed Subcontractors and Suppliers shall not be substituted without the Express authorization of the City or its duly authorized agent.

2. Request for Subcontractor or Supplier substitution shall be made in writing to Purchasing & Contracting Department, Public Works Division, Attention Contract Specialist, 1200 3rd Ave., Suite 200, MS 56P, San Diego, CA 92101 with a copy to the Engineer.

3. The request shall include a thorough explanation of the reason(s) for the substitution, including dollar amounts and a letter from each substituted Subcontractor or Supplier stating that they (the Subcontractors or Suppliers) release all interest in working on the Project and written confirmation from the new Subcontractor or Supplier stating that they agree to work on the Project along with the dollar value of the Work to be performed.

4. Written approval of the substitution request shall be received by you or from the City or its authorized officer prior to any unlisted Subcontractor or Supplier performing Work on the Project.

5. Substitution of Subcontractors and Suppliers without authorization shall subject you to those penalties set forth in Public Contract Code §4110.

6. Requests for Supplier substitution shall be made in writing at least 10 Days prior to the provision of materials, supplies, or services by the proposed Supplier and shall include proof of written notice to the originally listed Supplier of the proposed substitution.

7. A Contractor whose Bid is accepted shall not:

   a) Substitute a person as Subcontractor or Supplier in place of the Subcontractor or Supplier listed in the original bid, except that the City, or it's duly authorized officer, may consent to the substitution of another person as a Subcontractor or Supplier in any of the following situations:

      i. When the Subcontractor or Supplier listed in the Bid, after having a reasonable opportunity to do so, fails or refuses to execute a written Contract for the scope of work specified in the subcontractor's bid and at the price specified in the subcontractor's bid, when that written contract, based upon the general terms, conditions, plans, and specifications for the project involved or the terms of the subcontractor's written bid, is presented to the subcontractor by the prime contractor.

      ii. When the listed Subcontractor or Supplier becomes insolvent or the subject of an order for relief in bankruptcy.

      iii. When the listed Subcontractor or Supplier fails or refuses to perform his or her subcontract.

      iv. When the listed Subcontractor fails or refuses to meet bond requirements as set forth in Public Contract Code §4108.

      v. When you demonstrate to the City or it's duly authorized officer, subject to the provisions set forth in Public Contract Code §4107.5, that the name of the Subcontractor was listed as the result of an inadvertent clerical error.

      vi. When the listed Subcontractor is not licensed pursuant to Contractor License Law.

vii. When the City, or it's duly authorized officer, determines that the Work performed by the listed Subcontractor or that the materials or supplies provided by the listed Supplier are substantially unsatisfactory and not in substantial accordance with the Plans and specifications or that the Subcontractor or Supplier is substantially delaying or disrupting the progress of the Work.

viii. When the listed Subcontractor is ineligible to work on a public works project pursuant to §§1777.1 or 1777.7 of the Labor Code.

ix. When the City or its duly authorized agent determines that the listed Subcontractor is not a responsible contractor.

b) Permit a Contract to be voluntarily assigned or transferred or allow it to be performed by anyone other than the original Subcontractor, Supplier listed in the original Bid without the consent of the City, or it's duly authorized officer.

c) Other than in the performance of "Change Orders" causing changes or deviations from the Contract, sublet or subcontract any portion of the Work, or contract for materials or supplies in excess of 0.5% of your total bid or $10,000, whichever is greater, as to which his or her original Bid did not designate a Subcontractor or Supplier.

8. Following receipt of notice from you of the proposed substitution of a Subcontractor or Supplier, the listed Subcontractor or Supplier who has been so notified shall have 5 Working Days within which to submit written objections to the substitution to the Contract Specialist with a copy to the Engineer. Failure to file these written objections shall constitute the listed Subcontractor or Supplier's consent to the substitution. If written objections are filed, the City shall give notice in writing of at least 5 Working Days to the listed Subcontractor or Supplier of a hearing by the City on your request for substitution.

I. PROMPT PAYMENT.

1. You or your Subcontractors shall pay to any subcontractor, not later than 7 Calendar Days of receipt of each progress payment, unless otherwise agreed to in writing, the respective amounts allowed you on account of the Work performed by the Subcontractors, to the extent of each Subcontractor's interest therein. In cases of Subcontractor performance deficiencies, you shall make written notice of any withholding to the Subcontractor with a copy to the Contracts Specialist. Upon correction of the deficiency, you shall pay the Subcontractor the amount previously withheld within 14 Calendar Days after payment by the City.

2. Any violation of California Business and Professions Code, §7108.5 concerning prompt payment to Subcontractors shall subject the violating Contractor or

Subcontractor to the penalties, sanctions, and other remedies of that section. This requirement shall not be construed to limit or impair any contractual, administrative, or judicial remedies otherwise available to you or your Subcontractor in the event of a dispute involving late payment or nonpayment by the Prime Contractor, deficient subcontract performance, or noncompliance by a Subcontractor.

J. PROMPT PAYMENT OF FUNDS WITHHELD TO SUBCONTRACTORS.

1. The City will hold retention from you and will make prompt and regular incremental acceptances of portions, as determined by the Engineer, of the Work and pay retention to you based on these acceptances.
2. You or your Subcontractors shall return all monies withheld in retention from a Subcontractor within 30 Calendar Days after receiving payment for Work satisfactorily completed and accepted including incremental acceptances of portions of the Work by the City.
3. Federal law (49CFR26.29) requires that any delay or postponement of payment over 30 Calendar Days may take place only for good cause and with the City's prior written approval. Any violation of this provision by you or your Subcontractor shall subject you or your Subcontractor to the penalties, sanctions, and other remedies specified in §7108.5 of the Business and Professions Code.
4. These requirements shall not be construed to limit or impair any contractual, administrative, or judicial remedies otherwise available to you or your Subcontractor in the event of a dispute involving late payment or nonpayment by you, deficient subcontract performance, or noncompliance by a Subcontractor.

K. CERTIFICATION.

1. The City accepts certifications of DBE, DVBE, MBE, SMBE, SWBE, or WBE by any of the following certifying agencies:
   a) Current certification by the State of California Department of Transportation (CALTRANS) as DBE, SMBE, or SWBE.
   b) Current MBE, WBE, or DVBE certification from the California Public Utilities Commission.
   c) DVBE certification is received from the State of California's Department of General Services, Office of Small and Minority Business.
   d) Current certification by the City of Los Angles as DBE, WBE, or MBE.
   e) Subcontractors' valid proof of certification status (copies of MBE, WBE, DBE, or DVBE certifications) shall be submitted as required.

L. CONTRACT RECORDS AND REPORTS.

1. You shall maintain records of all subcontracts and invoices from your

Subcontractors and Suppliers for work on this project. Records shall show name, telephone number including area code, and business address of each Subcontractor, Supplier, and joint venture partner, and the total amount actually paid to each firm. Project relevant records, regardless of tier, may be periodically reviewed by the City.

2. You shall retain all records, books, papers, and documents pertinent to the Contract for a period of not less than 5 years after Notice of Completion and allow access to said records by the City's authorized representatives.

3. You shall submit the following reports using the web-based contract compliance software, LCP Tracker Online Payroll Reporting:

   a. **Monthly Payment.** You and your Subcontractors and Suppliers shall submit Monthly Payment Reporting by the 5th day of the subsequent month. Incomplete and/or delinquent reporting may cause payment delays, non-payment of invoices, or both.

   b. You shall submit a signed and executed LCP Tracker Software Contract 3rd Party User Agreement prior to the PLA Pre-job conference as defined in Article 16 of the PLA. See **Appendix I – LCP Tracker Third Party User Agreement.**

3. The records maintained under item 1, described above, shall be consolidated into a Final Summary Report, certified as correct by an authorized representative of the Contractor. The Final Summary Report shall include all subcontracting activities and be sent to the EOCP Program Manager prior to Acceptance. Failure to comply may result in assessment of liquidated damages or withholding of retention. The City will review and verify 100% of subcontract participation reported in the Final Summary Report prior to approval and release of final retention to you. In the event your Subcontractors are owed money for completed Work, the City may authorize payment to subcontractor via a joint check from the withheld retention.

EQUAL OPPORTUNITY CONTRACTING PROGRAM (EOCP)

SECTION B - SLBE-ELBE SUBCONTRACTING REQUIREMENTS

THESE SPECIAL PROVISIONS SUPPLEMENT THE POLICIES AND REQUIREMENTS ESTABLISHED BY THE CITY OF SAN DIEGO EQUAL OPPORTUNITY CONTRACTING PROGRAM SPECIFIED IN THE CITY'S GENERAL EOCP REQUIREMENTS.

A. GENERAL.

1. It is the City's policy to encourage greater availability, capacity development, and contract participation by SLBE and ELBE firms in City contracts. This policy is, in part, intended to further the City's compelling interest to stimulate economic development through the support and empowerment of the local community, ensure that it is neither an active nor passive participant in marketplace discrimination, and promote equal opportunity for all segments of the contracting community.
2. The City is committed to maximizing subcontracting opportunities for all qualified and available firms.
3. This policy applies to City-funded construction contracts. Bidders shall be fully informed of this policy as set forth in these specifications. Mandatory or voluntary subcontracting percentages, Bid Discounts, and restricted competitions are specified in the Contract Documents.
4. You shall make subcontracting opportunities available to a broad base of qualified Subcontractors and shall achieve the minimum SLBE-ELBE Subcontractor participation identified for your project.
5. Failure to subcontract the specified minimum (mandatory) percentages of the Bid to qualified available SLBE-ELBE Subcontractors will cause a Bid to be rejected as non-responsive unless the Bidder has demonstrated compliance with the affirmative steps as specified in the City's document titled "Small Local Business (SLBE) Program, INSTRUCTIONS FOR BIDDERS COMPLETING THE GOOD FAITH EFFORT SUBMITTAL" and has submitted documentation showing that all required positive efforts were made prior to the Bid submittal due date. The required Good Faith Effort (GFE) documentation shall be submitted to the Contract Specialist. The instructions for completing the good faith effort submittal can be found on the City's website:

   https://www.sandiego.gov/sites/default/files/legacy/eoc/pdf/slbegfeinst.pdf
6. The current list of certified SLBE-ELBE firms and information for completing the GFE submittal can be found on the City's EOC Department website:

   http://www.sandiego.gov/eoc/programs/slbe.shtml
7. These requirements may be waived, at the City's sole discretion, on projects deemed inappropriate for subcontracting participation.

B. DEFINITIONS.

1. The following definitions shall be used in conjunction with these specifications:

   a) **Bid Discount** – Additional inducements or enhancements in the bidding process that are designed to increase the chances for the selection of SLBE firms in competition with other firms.

   b) **Commercially Useful Function** – An SLBE-ELBE performs a commercially useful function when it is responsible for the execution of the Work and is carrying out its responsibilities by actually performing, managing, and supervising the Work involved. To perform a commercially useful function, the SLBE-ELBE shall also be responsible, with respect to materials and supplies used on the Contract, for negotiating price, determining quantity and quality, ordering the material, and installing (where applicable) and paying for the material itself.

      To determine whether an SLBE-ELBE is performing a commercially useful function, an evaluation will be performed of the amount of Work subcontracted, normal industry practices, whether the amount the SLBE-ELBE firm is to be paid under the contract is commensurate with the Work it is actually performing and the SLBE-ELBE credit claimed for its performance of the Work, and other relevant factors. Specifically, an SLBE-ELBE does not perform a commercially useful function if its role is limited to that of an extra participant in a transaction, contract, or project through which funds are passed in order to obtain the appearance of meaningful and useful SLBE-ELBE participation, when in similar transactions in which SLBE-ELBE firms do not participate, there is no such role performed.

   c) **Good Faith Efforts (GFE)** – Documentation of the Bidder's intent to comply with SLBE Program goals and procedures included in the City's SLBE Program, Instructions for Completing Good Faith Effort Submittal available from the City's EOCP website or the Contract Specialist.

   d) **Independently Owned, Managed, and Operated** – Ownership of a SLBE-ELBE firm shall be direct, independent, and by individuals only. Business firms that are owned by other businesses or by the principals or owners of other businesses that cannot themselves qualify under the SLBE-ELBE eligibility requirements shall not be eligible to participate in the Program. Moreover, the day-to-day management of the SLBE-ELBE firm shall be direct and independent of the influence of any other businesses that cannot themselves qualify under the SLBE-ELBE eligibility requirements.

   e) **Joint Venture** – An association of two or more persons or business entities that is formed for the single purpose of carrying out a single defined business enterprise for which purpose they combine their

capital, efforts, skills, knowledge, or property. Joint ventures shall be established by written agreement to qualify for this program.

f) **Local Business Enterprise ("LBE")** – A firm having a Principal Place of Business and a Significant Employment Presence in San Diego County, California that has been in operation for 12 consecutive months and a valid business tax certificate. This definition is subsumed within the definition of Small Local Business Enterprise.

g) **Minor Construction Program** – A program developed for bidding exclusively among SLBE-ELBE Construction firms.

h) **Principal Place of Business** – A location wherein a firm maintains a physical office and through which it obtains no less than 50% of its overall customers or sales dollars.

i) **Protégé** – A firm that has been approved and is an active participant in the City's Mentor-Protégé Program and that has signed the required program participation agreement and has been assigned a mentor.

j) **Significant Employee Presence** – No less than 25% of a firm's total number of employees are domiciled in San Diego County.

C. SUBCONTRACTOR PARTICIPATION.

1. For the purpose of satisfying subcontracting participation requirements, only 1st tier SLBE–ELBE Subcontractors will be recognized as participants in the Contract according to the following criteria:

   a) For credit to be allowed toward a respective participation level, all listed SLBE-ELBE firms shall have been certified by the Bid due date.

   b) The Subcontractor shall perform a commercially useful function for credit to be allowed toward subcontractor participation levels. The Subcontractor shall be required by you to be responsible for the execution of a distinct element of the Work and shall carry out its responsibility by actually performing and supervising its own workforce.

   c) If the Bidder is seeking the recognition of materials, supplies, or both towards achieving any mandatory subcontracting participation level, the Bidder shall indicate on Form AA40 – Named Equipment/Material Supplier List with the Bid the following:

      i. If the materials or supplies are obtained from a SLBE-ELBE manufacturer, the Bidder will receive 100% of the cost of the materials or supplies toward SLBE participation. For the purposes of counting SLBE-ELBE participation, a manufacturer is a firm that operates or maintains a factory or establishment that produces, on the premises, the materials, supplies, articles, or equipment required under the Contract and of the general character described by the specifications.

ii. If the materials or supplies are obtained from a SLBE-ELBE supplier, the Bidder will receive 60% of the cost of the materials or supplies toward SLBE participation. For the purposes of counting SLBE-ELBE participation a Supplier is a firm that owns, operates, or maintains a store, warehouse, or other establishment in which the materials, supplies, articles or equipment of the general character described by the specifications and required under the Contract are bought, kept in stock, and regularly sold or leased to the public in the usual course of business. To be a supplier, the firm shall be an established, regular business that engages, as its principal business and under its own name, in the purchase and sale or lease of the products in question. A person may be a supplier in such bulk items as petroleum products, steel, cement, gravel, stone, or asphalt without owning, operating, or maintaining a place of business if the person both owns and operates distribution equipment for the products. Any supplementing of the suppliers' own distribution equipment shall be by a long-term lease agreement and shall not be on an ad hoc or contract-by-contract basis.

iii. If the materials or supplies are obtained from a SLBE-ELBE, which is neither a manufacturer nor a supplier, the entire amount of fees or commissions charged for assistance in the procurement of the materials and supplies, fees or transportation charges for the delivery of materials or supplies required on a job site will be counted toward SLBE-ELBE participation, provided the fees are reasonable and not excessive as compared with fees customarily allowed for similar services. No portion of the cost of the materials and supplies themselves will be counted toward SLBE-ELBE participation.

d) If the Bidder is seeking the recognition of SLBE-ELBE Trucking towards achieving any mandatory subcontracting participation level, the Bidder shall indicate it on Form AA35 – List of Subcontractors with the Bid. The following factors will be evaluated in determining the credit to be allowed toward the respective participation level:

i. The SLBE-ELBE shall be responsible for the management and supervision of the entire trucking operation for which it is getting credit on a particular Contract and there shall not be a contrived arrangement for the purpose of counting SLBE-ELBE participation.

ii. The SLBE-ELBE shall itself own and operate at least 1 fully licensed, insured, and operational truck used on the Contract.

iii. The SLBE-ELBE receives credit for the total value of the transportation services it provides on the Contract using trucks it owns, insures, and operates using drivers it employs.

iv. The SLBE-ELBE may lease trucks from another SLBE-ELBE firm including an owner-operator who is certified as a SLBE-ELBE. The SLBE-ELBE who leases trucks from another SLBE-ELBE receives credit for the total value of the transportation services the lessee SLBE-ELBE provides on the contract.

v. The SLBE-ELBE may also lease trucks from a non-SLBE-ELBE firm, including an owner-operator. The SLBE-ELBE who leases trucks from a non-SLBE-ELBE is entitled to credit for the total value of transportation services provided by non-SLBE-ELBE lessees not to exceed the value of transportation services provided by SLBE-ELBE owned trucks on the contract. Additional participation by non-SLBE-ELBE lessees receive credit only for the fee or commission it receives as a result of the lease arrangement.

vi. A lease shall indicate that the SLBE-ELBE has exclusive use of and control over the truck. This does not preclude the leased truck from working for others during the term of the lease with the consent of the SLBE-ELBE so long as the lease gives the SLBE-ELBE absolute priority for use of the leased truck.

D. SLBE-ELBE SUBCONTRACTOR PARTICIPATION PERCENTAGES.

1. Contracts valued at $1,000,000 and above will be considered Major Public Works Contracts and will include a mandatory Subcontractor participation requirement for SLBE–ELBE firms.

   a) The Bidder shall achieve the mandatory Subcontractor participation requirement or demonstrate GFE.

   b) The Bidders shall indicate the participation on Forms AA35 - List of Subcontractors and AA40 - Named Equipment/Material Supplier List as applicable regardless of the dollar value.

   c) An SLBE-ELBE Bidder may count its own participation toward achieving the mandatory goal as long as the SLBE-ELBE Bidder performs 51% of the Contract Price.

2. Contracts Valued over $500,000 and under $1,000,000 will also be considered Major Public Works Contracts and will include the mandatory subcontractor participation requirements described above and the following:

   a) 5% bid discount for SLBE-ELBE firms.

   b) Non-certified Contractor will receive 5% bid discount if they achieve the specified mandatory Subcontracting participations.

c) Bid discounts shall not apply if the award will result in a total contract cost of $50,000 in excess of the apparent lowest Bid.

d) In the event of a tie bid between a SLBE-ELBE Bidder and a non-SLBE-ELBE Bidder, the SLBE-ELBE Bidder will be awarded the Contract.

e) In the event of a tie bid between a discounted Bid and a non-discounted Bid, the discounted Bid will be awarded the Contract.

3. Contracts valued over $250,000 up to $500,000 will be considered Minor Public Works Contracts and will be awarded through a competitive Bid process open only to City certified SLBE-ELBE firms. If there are no bidders or no responsible bidders, the Contract will be made available to all Bidders and will be subject to requirements listed in items 1 and 2 for Major Public Works Contracts above.

4. Contracts valued at $250,000 and below will also be considered Minor Public Works Contracts and will be awarded through a competitive bid process open only to City certified ELBEs unless there are less than 2 firms available at which it will be awarded through a competitive process open only to the City certified SLBE-ELBE firms. If there are no bidders or no responsible bidders, the Contract will be made available to all Bidders and subject to requirements listed in items 1 and 2 for Major Public Works Contracts above.

E. JOINT VENTURES.

1. The City may allow for Joint Venture bid discounts on some Contracts. Contracts that allow for Joint Venture bid discounts will be designated in Bid documents. A firm that is bidding or competing for City Contracts may partner with a certified SLBE or ELBE to compete for Contracts as a Joint Venture.

2. A Joint Venture shall be between two entities with the same discipline or license as required by the City. Joint ventures will receive bid discounts depending on the SLBE or ELBE percentage of participation. To be eligible for a discount, a Joint Venture Agreement shall be approved by the City at the time of Bid submittal. The maximum allowable discount shall be 5%. The parties shall agree to enter in the relationship for the life of the projects.

3. Joint Venture shall submit a Joint Venture Management Plan, a Joint Venture Agreement, or both at least 2 weeks prior to the Bid due date. Copies of the Joint Venture applications are available upon request to the Contract Specialist. Each agreement or management plan shall include the following:

a) Detailed explanation of the financial contribution for each partner.

b) List of personnel and equipment used by each partner.

c) Detailed breakdown of the responsibilities of each partner.

d) Explanation of how the profits and losses will be distributed.

e) Description of the bonding capacity of each partner.

f) Management or incentive fees available for any one of the partners (if any).

4. Each Joint Venture partner shall perform a Commercially Useful Function. An SLBE or ELBE that relies on the resources and personnel of a non-SLBE or ELBE firm will not be deemed to perform a Commercially Useful Function.

5. Each Joint Venture partner shall possess licenses appropriate for the discipline for which a proposal is being submitted. If a Joint Venture is bidding on a single trade project, at the time of bid submittal, each Joint Venture partner shall possess the requisite specialty license for that trade bid.

6. The SLBE or ELBE partner shall clearly define the portion of the Work to be performed. This Work shall be of the similar type of Work the SLBE or ELBE partner performs in the normal course of its business. The Joint Venture Participation Form shall specify the Bid items to be performed by each individual Joint Venture partner. Lump sum Joint Venture participation shall not be acceptable.

7. Responsibilities of the SLBE or ELBE Joint Venture Partner:

   a) The SLBE or ELBE partner shall share in the control, management responsibilities, risks and profits of the Joint Venture in proportion with the level of participation in the project.

   b) The SLBE or ELBE partner shall perform Work that is commensurate with its experience.

   c) The SLBE or ELBE partner shall use its own employees and equipment to perform its portion of the Work.

   d) The Joint Venture as a whole shall perform Bid items that equal or exceed 50% of the Contract Price, excluding the cost of manufactured items, in order to be eligible for a Joint Venture discount.

F. MAINTAINING PARTICIPATION LEVELS.

1. Credit and preference points are earned based on the level of participation proposed prior to the award of the Contract. Once the Project begins you shall achieve and maintain the SLBE-ELBE participation levels for which credit and preference points were earned. You shall maintain the SLBE-ELBE percentages indicated at the Award of Contract and throughout the Contract Time.

2. If the City modifies the original Scope of Work, you shall make reasonable efforts to maintain the SLBE-ELBE participation for which creditor preference points were earned. If participation levels will be reduced, approval shall be received from the City prior to making changes.

3. You shall notify and obtain written approval from the City in advance of any reduction in subcontract scope, termination, or substitution for a designated SLBE-ELBE Subcontractor. Failure to do so shall constitute a material breach of the Contract.

4. If you fail to maintain the SLBE-ELBE participation listed at the time the Contract is awarded and have not received prior approval from the City, the

City may declare you in default and will be considered grounds for debarment under Chapter 2, Article 2, Division 8, of the San Diego Municipal Code.

G. SUBCONTRACTING EFFORTS REVIEW AND EVALUATION.

1. Documentation of your subcontracting efforts will be reviewed by EOCP to verify that you made subcontracting opportunities available to a broad base of qualified Subcontractors, negotiated in good faith with interested Subcontractors, and did not reject any bid for unlawful discriminatory reasons. The EOCP review is based on the federal "Six Good Faith Efforts" model.

2. The GFEs are required methods to ensure that all ELBE and SLBE firms have had the opportunity to compete for the City's Public Works procurements. The Six Good Faith Efforts, also known as affirmative steps, attract and utilize ELBE and SLBE firms:

   a) Ensure ELBE firms are made aware of contracting opportunities to the fullest extent practicable through outreach and recruitment activities.

   b) Make information of forthcoming opportunities available to SLBE-ELBE firms and arrange time for Contracts and establish delivery schedules, where requirements permit, in a way that encourages and facilitates participation by SLBE-ELBE firms in the competitive process. This includes posting solicitations for Bids or proposals to SLBE-ELBE firms for a minimum of 10 Working Days before the Bid or Proposal due date.

   c) Consider in the contracting process whether firms competing for large Contracts could subcontract with SLBE-ELBE firms.

   d) Encourage contracting with a consortium of ELBE-SLBE firms when a Contract is too large for one of these firms to handle individually.

   e) Use the services and assistance of the City's EOC Office and the SLBE-ELBE Directory.

   f) If you award subcontracts, require your Subcontractors to take the steps listed above.

H. GOOD FAITH EFFORT DOCUMENTATION.

1. If the specified SLBE-ELBE Subcontractor participation percentages are not met, you shall submit information necessary to establish that adequate GFEs were taken to meet the Contract Subcontractor participation percentages. See the City's document titled "Small Local Business (SLBE) Program, INSTRUCTIONS FOR BIDDERS COMPLETING THE GOOD FAITH EFFORT SUBMITTAL." The instructions for completing the good faith effort submittal can be found on the City's website:

   https://www.sandiego.gov/sites/default/files/legacy/eoc/pdf/slbegfeinst.pdf

I. SUBCONTRACTOR SUBSTITUTION.

1. Evidence of fraud or discrimination in the substitution of Subcontractors will result in sanctions including assessment of penalty fines, termination of Contract, or debarment. This section does not replace applicable California Public Contract Code.

J. FALSIFICATION OF SUB-AGREEMENT AND FRAUD.

1. Falsification or misrepresentation of a sub-agreement as to company name, Contract amount or actual Work performed by Subcontractors, or any falsification or fraud on the part your submission of documentation and forms pursuant to this program, will result in sanctions against you including assessment of penalty fines, termination of the Contract, or debarment. Instances of falsification or fraud which are indicative of an attempt by you to avoid subcontracting with certain categories of Subcontractors on the basis of race, gender, gender expression, gender identity, religion, national origin, ethnicity, sexual orientation, age, or disability shall be referred to the Equal Opportunity Contracting Program's Investigative Unit for possible violations of Article 2, Division 35 of the City Administrative Code, §§22.3501 et seq. (Nondiscrimination in Contracting).

K. RESOURCES.

1. The current list of certified SLBE-ELBE firms and information for completing the GFE submittal can be found on the City's EOC Department website:

   http://www.sandiego.gov/eoc/programs/slbe.shtml

ATTACHMENT D

PREVAILING WAGE

PREVAILING WAGE

1. PREVAILING WAGE RATES: Pursuant to San Diego Municipal Code section 22.3019, construction, alteration, demolition, repair and maintenance work performed under this Contract is subject to State prevailing wage laws. For construction work performed under this Contract cumulatively exceeding $25,000 and for alteration, demolition, repair and maintenance work performed under this Contract cumulatively exceeding $15,000, the Contractor and its subcontractors shall comply with State prevailing wage laws including, but not limited to, the requirements listed below.

1.1. Compliance with Prevailing Wage Requirements. Pursuant to sections 1720 through 1861 of the California Labor Code, the Contractor and its subcontractors shall ensure that all workers who perform work under this Contract are paid not less than the prevailing rate of per diem wages as determined by the Director of the California Department of Industrial Relations (DIR). This includes work performed during the design and preconstruction phases of construction including, but not limited to, inspection and land surveying work.

1.1.1. Copies of such prevailing rate of per diem wages are on file at the City and are available for inspection to any interested party on request. Copies of the prevailing rate of per diem wages also may be found at http://www.dir.ca.gov/OPRL/DPreWageDetermination.htm. Contractor and its subcontractors shall post a copy of the prevailing rate of per diem wages determination at each job site and shall make them available to any interested party upon request.

1.1.2. The wage rates determined by the DIR refer to expiration dates. If the published wage rate does not refer to a predetermined wage rate to be paid after the expiration date, then the published rate of wage shall be in effect for the life of this Contract. If the published wage rate refers to a predetermined wage rate to become effective upon expiration of the published wage rate and the predetermined wage rate is on file with the DIR, such predetermined wage rate shall become effective on the date following the expiration date and shall apply to this Contract in the same manner as if it had been published in said publication. If the predetermined wage rate refers to one or more additional expiration dates with additional predetermined wage rates, which expiration dates occur during the life of this Contract, each successive predetermined wage rate shall apply to this Contract on the date following the expiration date of the previous wage rate. If the last of such predetermined wage rates expires during the life of this Contract, such wage rate shall apply to the balance of the Contract.

1.2. Penalties for Violations. Contractor and its subcontractors shall comply with California Labor Code section 1775 in the event a worker is paid less than the prevailing wage rate for the work or craft in which the worker is employed. This shall be in addition to any other applicable penalties allowed under Labor Code sections 1720 – 1861.

1.3. **Payroll Records.** Contractor and its subcontractors shall comply with California Labor Code section 1776, which generally requires keeping accurate payroll records, verifying and certifying payroll records, and making them available for inspection. Contractor shall require its subcontractors to also comply with section 1776. Contractor and its subcontractors shall submit weekly certified payroll records online via the City's web-based Labor Compliance Program. Contractor is responsible for ensuring its subcontractors submit certified payroll records to the City.

1.3.1. Contractor and their subcontractors shall also furnish records specified in Labor Code section 1776 directly to the Labor Commissioner in the manner required by Labor Code section 1771.4.

1.4. **Apprentices.** Contractor and its subcontractors shall comply with California Labor Code sections 1777.5, 1777.6 and 1777.7 concerning the employment and wages of apprentices. Contractor is held responsible for the compliance of their subcontractors with sections 1777.5, 1777.6 and 1777.7.

1.5. **Working Hours.** Contractor and their subcontractors shall comply with California Labor Code sections 1810 through 1815, including but not limited to: (i) restrict working hours on public works contracts to eight hours a day and forty hours a week, unless all hours worked in excess of 8 hours per day are compensated at not less than 1½ times the basic rate of pay; and (ii) specify penalties to be imposed on contractors and subcontractors of $25 per worker per day for each day the worker works more than 8 hours per day and 40 hours per week in violation of California Labor Code sections1810 through 1815.

1.6. **Required Provisions for Subcontracts.** Contractor shall include at a minimum a copy of the following provisions in any contract they enter into with a subcontractor: California Labor Code sections 1771, 1771.1, 1775, 1776, 1777.5, 1810, 1813, 1815, 1860 and 1861.

1.7. **Labor Code Section 1861 Certification.** Contractor in accordance with California Labor Code section 3700 is required to secure the payment of compensation of its employees and by signing this Contract, Contractor certifies that "I am aware of the provisions of Section 3700 of the California Labor Code which require every employer to be insured against liability for workers' compensation or to undertake self-insurance in accordance with the provisions of that code, and I will comply with such provisions before commencing the performance of the work of this Contract."

1.8. **Labor Compliance Program**. The City has its own Labor Compliance Program authorized in August 2011 by the DIR. The City will withhold contract payments when payroll records are delinquent or deemed inadequate by the City or other governmental entity, or it has been established after an investigation by the City or other governmental entity that underpayment(s) have occurred. For questions or assistance, please contact the City of San Diego's Prevailing Wage Unit at 858-627-3200.

1.9. Contractor and Subcontractor Registration Requirements. This project is subject to compliance monitoring and enforcement by the DIR. A contractor or subcontractor shall not be qualified to bid on, be listed in a bid or proposal, subject to the requirements of section 4104 of the Public Contract Code, or engage in the performance of any contract for public work, unless currently registered and qualified to perform public work pursuant to Labor Code section 1725.5 It is not a violation of this section for an unregistered contractor to submit a bid that is authorized by Section 7029.1 of the Business and Professions code or by Section 10164 or 20103.5 of the Public Contract Code, provided the contractor is registered to perform public work pursuant to Section 1725.5 at the time the contract is awarded.

1.9.1. A Contractor's inadvertent error in listing a subcontractor who is not registered pursuant to Labor Code section 1725.5 in response to a solicitation shall not be grounds for filing a bid protest or grounds for considering the bid non-responsive provided that any of the following apply: (1) the subcontractor is registered prior to bid opening; (2) within twenty-four hours after the bid opening, the subcontractor is registered and has paid the penalty registration fee specified in Labor Code section 1725.5; or (3) the subcontractor is replaced by another registered subcontractor pursuant to Public Contract Code section 4107.

1.9.2. By submitting a bid or proposal to the City, Contractor is certifying that he or she has verified that all subcontractors used on this public work project are registered with the DIR in compliance with Labor Code sections 1771.1 and 1725.5, and Contractor shall provide proof of registration for themselves and all listed subcontractors to the City at the time of bid or proposal due date or upon request.

1.10. Stop Order. For Contractor or its subcontractors engaging in the performance of any public work contract without having been registered in violation of Labor Code sections 1725.5 or 1771.1, the Labor Commissioner shall issue and serve a stop order prohibiting the use of the unregistered contractors or unregistered subcontractor(s) on ALL public works until the unregistered contractor or unregistered subcontractor(s) is registered. Failure to observe a stop order is a misdemeanor.

1.11. List of all Subcontractors. The Contractor shall provide the list of subcontractors (regardless of tier), along with their DIR registration numbers, utilized on this Contract prior to any work being performed; and the Contractor shall provide a complete list of all subcontractors with each invoice. Additionally, Contractor shall provide the City with a complete list of all subcontractors (regardless of tier) utilized on this contract within ten working days of the completion of the contract, along with their DIR registration numbers. The City shall withhold final payment to Construction Management Professional until at least thirty (30) days after this information is provided to the City.

1.12. Exemptions for Small Projects. There are limited exemptions for installation, alteration, demolition, or repair work done on projects of $25,000 or less. The Contractor shall still comply with Labor Code sections 1720 et. seq. The only recognized exemptions are listed below:

1.12.1. Registration. The Contractor will not be required to register with the DIR for small projects. (Labor Code section 1771.1).

1.12.2. Certified Payroll Records. The records required in Labor Code section 1776 shall be required to be kept and submitted to the City of San Diego, but will not be required to be submitted online with the DIR directly. The Contractor will need to keep those records for at least three years following the completion of the Contract. (Labor Code section 1771.4).

1.12.3. List of all Subcontractors. The Contractor shall not be required to hire only registered subcontractors and is exempt from submitting the list of all subcontractors that is required in section 1.11 above. (Labor code section 1773.3).

ATTACHMENT E

SUPPLEMENTARY SPECIAL PROVISIONS

SUPPLEMENTARY SPECIAL PROVISIONS

The following Supplementary Special Provisions (SSP) modifies the following documents:

1. The **2021 Edition** of the Standard Specifications for Public Works Construction (The "GREENBOOK").

2. The **2021 Edition** of the City of San Diego Standard Specifications for Public Works Construction (The "WHITEBOOK"), including the following:

   a) General Provisions (A) for all Construction Contracts.

SECTION 1 – GENERAL, TERMS, DEFINITIONS, ABBREVIATIONS, UNITS OF MEASURE, AND SYMBOLS

1-2 **TERMS AND DEFINITIONS.** To the "WHITEBOOK", item 55, "Normal Working Hours", ADD the following:

The **Normal Working Hours** are **7:00 AM** to **5:00 PM.**

SECTION 2 - SCOPE OF THE WORK

2-2 **PERMITS, FEES, AND NOTICES.** To the "WHITEBOOK", ADD the following:

2. The City will obtain, at no cost to you, the following permits:

   a) San Diego Fire-Rescue Hazardous Materials Application

   b) County of San Diego Hazardous Materials Questionnaire

   c) Coastal Development Permit Waiver

3. The permits listed above are available for review at the following link:

   https://drive.google.com/drive/folders/1dJiyEXztrhwMrdm1K3QUwl3nZVZwozAT

SECTION 3 – CONTROL OF THE WORK

3-2 **SELF-PERFORMANCE.** To the "GREENBOOK", DELETE in its entirety and SUBSTITUTE with the following:

1. You shall perform, with your own organization, Contract Work amounting to at least **50%** of the Base Bid.

3-9 **TECHNICAL STUDIES AND SUBSURFACE DATA.** To the "WHITEBOOK", ADD the following:

5. In preparation of the Contract Documents, the designer has relied upon the following reports of explorations and tests at the Work Site:

   a) Report of Geotechnical Investigation dated March 7, 2022, by Allied Geotechnical Engineers Incorporated.

6. The reports listed above are available for review at the following link:

https://drive.google.com/drive/folders/1ZTdYSSy90GWHyJNze6uRjGfTfl--Dyaj

3-10 **SURVEYING.** To the "GREENBOOK" and "WHITEBOOK", DELETE in its entirety and SUBSTITUTE with the following:

3-10 SURVEYING (DESIGN-BID-BUILD).

3-10.1 General.

1. You shall provide all required site layout and general grade checking work not specified in 3-10.2, "Survey Services Provided by City".

2. Notify the City, in writing, at least 2 Working Days prior to requesting survey services provided by the City.

3-10.2 Survey Services Provided by City.

1. Unless otherwise noted, monument perpetuation, including mark-outs, will be performed by the City. Coordination of these services will be your duty, through the Resident Engineer. If, at any time, an existing survey monument is, or will be, destroyed or disturbed during the course of construction you shall notify the Resident Engineer so that the monument is preserved or perpetuated in accordance with state law.

2. The following surveying services, as defined in Cal. Bus. & Prof. Code §8726, shall be provided by the City:

   a) Locating or establishing a minimum of 4 project geodetic survey control points that provide horizontal and vertical reference values for site feature and structure layout reference locations.

   b) Locating, establishing, or reestablishing project site boundary lines, survey monuments, right-of-way lines, or easement lines.

   c) Locating or establishing building design structure locations (building corners or envelope limits) sufficient for structure construction.

3-10.3 Payment.

1. The payment for site layout and general grade checking Work, coordination, and preservation of all survey related marks shall be included in the Contract Price.

3-12.7 Drinking Water Discharges Requirements. To the "WHITEBOOK", ADD the following:

1. You shall record the results for each discharge event on the City's Drinking Water Discharge Monitoring form included as **Appendix G - Monthly Drinking Water Discharge Monitoring Form.**

3-15.3 Coordination. To the "WHITEBOOK", ADD the following:

2. Other adjacent City projects are scheduled for construction for the same time period. See **Appendix F – Adjacent Project Map** for the approximate location. Coordinate the Work with the adjacent projects as listed below:

   a) Point Loma Wastewater Treatment Plant Stormwater Diversion Project (B-20001).
   Project Manager – Sara McMullen, City of San Diego, Associate Civil Engineer.
   SSMcMullen@sandiego.gov, 619-533-4127

SECTION 4 - CONTROL OF MATERIALS

ADD:

4-6 TRADE NAMES. To the "WHITEBOOK", ADD the following:

11. You shall submit your list of proposed substitutions for an "equal" item **no later than 5 Working Days after the issuance of the Notice of Intent to Award** and on the City's Product Submittal Form available at:

    https://www.sandiego.gov/ecp/edocref/

SECTION 5 – LEGAL RELATIONS AND RESPONSIBILITIES

5-3.3 Payroll Records. To the "WHITEBOOK", DELETE in its entirety and SUBSTITUTE with the following:

1. Your attention is directed to the City of San Diego Labor Compliance Program, Section IV, pages 4-7, and the State of California Labor Code §§1771.5(b) and 1776 (Stats. 1978, Ch. 1249). These require, in part, that you and your Subcontractors maintain and furnish to the City, at a designated time, a certified copy of each weekly payroll containing a statement of compliance signed under penalty of perjury.

2. You and your Subcontractors shall submit weekly certified payrolls reflecting the wages of all yours and Subcontractors' employees engaged in the Work online via LCP Tracker, the City's web-based labor compliance program.

3. You and your Subcontractors shall submit the following PLA and Labor Compliance required documents online via LCP Tracker, to the City's web-based labor compliance program:

   a) Letter of Assent (PLA Attachment A);

   b) Contractor Core Workforce Form (PLA Attachment B-2) [if required];

   c) Monthly Proof of Fringe Benefit Payments to Union Trust;

   d) City of San Diego Labor Compliance Authorized Signatory Form;

   e) City of San Diego List of Trades Craft;

   f) Labor Compliance Checklist;

   g) Fringe Benefit Statement;

   h) DAS 140 Form & Transmittal Confirmation;

   i) DAS 142 or Workforce Dispatch Request Form (PLA Attachment B-1) & Transmittal Confirmation;

   j) Certified Payroll Report (Performance Report with Statement of Compliance, Non-Performance Reports, Confirmation Report that CPR was uploaded to the DIR website);

   k) State & Federal Apprentice Certifications;

   l) Payroll Confirmations (as requested per CCR 16432);

   m) Other Deduction Forms (letter or documentation relating to non-standard deductions).

ADD:

5-3.6 **Project Labor Agreement (PLA).** The Contractor and all subcontractors agree to be bound by the Project Labor Agreement (which is attached as Attachment F and incorporated by this reference) by submitting a Letter of Assent to the City's Labor Coordinator. The Contractor shall submit its Letter of Assent as a condition of award and all subcontractors shall submit their Letter of Assent Consent before commencing any Work on the Project.

5-4 **INSURANCE.** To the "GREENBOOK", DELETE in its entirety and SUBSTITUTE with the following:

5-4 **INSURANCE.**

1. The insurance provisions herein shall not be construed to limit your indemnity and defense duties set forth in the Contract.

5-4.1 Policies and Procedures.

1. You shall procure the insurance described below, at your sole cost and expense, to provide coverage against claims for loss including injuries to persons or damage to property, which may arise out of or in connection with the performance of the Work by you, your agents, representatives, officers, employees or Subcontractors.
2. Insurance coverage for property damage resulting from your operations is on a replacement cost valuation. The market value will not be accepted.
3. You shall maintain this insurance as required by this Contract and at all times thereafter when you are correcting, removing, or replacing Work in accordance with this Contract. Your duties under the Contract, including your indemnity obligations, are not limited to the insurance coverage required by this Contract.
4. If you maintain broader coverage or higher limits than the minimums shown below, City requires and shall be entitled to the broader coverage or the higher limits maintained by you. Any available insurance proceeds in excess of the specified minimum limits of insurance and coverage shall be available to City.
5. Your payment for insurance shall be included in the Contract Price you bid. You are not entitled to any additional payment from the City to cover your insurance, unless the City specifically agrees to payment in writing. Do not begin any Work under this Contract or allow any Subcontractors to begin work, until you have provided, and the City has approved, all required insurance.
6. Policies of insurance shall provide that the City is entitled to 30 days advance written notice of cancellation or non-renewal of the policy or 10 days advance written notice for cancellation due to non-payment of premium. Maintenance of specified insurance coverage is a material element of the Contract. Your failure to maintain or renew coverage and to provide evidence of renewal during the term of the Contract may be treated by the City as a material breach of the Contract.

5-4.2 Types of Insurance.

5-4.2.1 General Liability Insurance.

1. Commercial General Liability Insurance shall be written on the current version of the ISO Occurrence form CG 00 01 07 98 or an equivalent form providing coverage at least as broad.

2. The policy shall cover liability arising from premises and operations, XCU (explosions, underground, and collapse), independent contractors, products/completed operations, personal injury and advertising injury, bodily injury, property damage, and liability assumed under an insured's contract (including the tort liability of another assumed in a business contract).

3. There shall be no endorsement or modification limiting the scope of coverage for either "insured vs. insured" claims or contractual liability. You shall maintain the same or equivalent insurance for at least 10 years following completion of the Work.

4. All costs of defense shall be outside the policy limits. Policy coverage shall be in liability limits of not less than the following:

General Annual Aggregate Limit	Limits of Liability
Other than Products/Completed Operations	$10,000,000
Products/Completed Operations Aggregate Limit	$10,000,000
Personal Injury Limit	$5,000,000
Each Occurrence	$5,000,000

5-4.2.2 Commercial Automobile Liability Insurance.

1. You shall provide a policy or policies of Commercial Automobile Liability Insurance written on the current version of the ISO form CA 00 01 12 90 or later version or equivalent form providing coverage at least as broad in the amount of $1,000,000 combined single limit per accident, covering bodily injury and property damage for owned, non-owned, and hired automobiles ("Any Auto").

2. All costs of defense shall be outside the limits of the policy.

5-4.2.3 Workers' Compensation Insurance and Employers Liability Insurance.

1. In accordance with the provisions of California Labor Code section 3700, you shall provide, at your expense, Workers' Compensation Insurance and Employers Liability Insurance to protect you against all claims under applicable state workers' compensation laws. The City, its elected officials, and employees will not be responsible for any claims in law or equity occasioned by your failure to comply with this requirement.

2. Statutory Limits shall be provided for Workers' Compensation Insurance as required by the state of California, and Employer's Liability Insurance with limits of no less than $1,000,000 per accident for bodily injury or disease.

3. By signing and returning the Contract, you certify that you are aware of the provisions of California's Workers' Compensation laws, including Labor Code section 3700, which requires every employer to be insured against liability for workers' compensation or to undertake self-insurance, and that you will comply with these provisions before commencing the Work.

5-4.2.4 Contractors Pollution Liability Insurance.

1. You shall procure and maintain at your expense or require your Subcontractor, as described below, to procure and maintain Contractors Pollution Liability Insurance applicable to the Work being performed, with a limit no less than $2,000,000 per claim or occurrence and $4,000,000 aggregate per policy period of one year.

2. All costs of defense shall be outside the limits of the policy.

3. You shall obtain written approval from the City for any insurance provided by your Subcontractor instead of you.

4. For approval of a substitution of your Subcontractor's insurance, you shall certify that all activities for which the Contractors Pollution Liability Insurance will provide coverage will be performed exclusively by the Subcontractor providing the insurance. The deductible shall not exceed $25,000 per claim unless the City has provided prior, written approval.

5. Occurrence based policies shall be procured before the Work commences. Claims Made policies shall be procured before the Work commences, shall be maintained for the Contract Time, and shall include a 12-month extended Claims Discovery Period applicable to this contract or the existing policy or policies that shall continue to be maintained for 12 months after the completion of the Work without advancing the retroactive date.

5-4.2.5 Contractors Hazardous Transporters Pollution Liability Insurance.

1. You shall procure and maintain at your expense or require your Subcontractor, as described below, to procure and maintain Contractors Hazardous Transporters Pollution Liability Insurance, including contractual liability coverage to cover liability arising out of transportation of hazardous or toxic, materials, substances, or any other pollutants by you or any Subcontractor in an amount no less than $2,000,000 limit per occurrence and $4,000,000 aggregate per policy period of one year.

2. All costs of defense shall be outside the limits of the policy.

3. You shall obtain written approval from the City from any insurance provided by a Subcontractor instead of you..

4. To obtain City approval of a Subcontractor's insurance coverage in lieu of the Contractor's insurance, the Contractor shall certify that all activities under the Contractor's Hazardous Transporters Pollution Liability Insurance will be performed exclusively by the Subcontractor providing the insurance. The deductible shall not exceed $25,000 per claim without prior approval of the City

5. Occurrence based policies shall be procured before the Work commences. Claims Made policies shall be procured before the Work commences, shall be maintained for the duration of this contract, and shall include a 12-month extended Claims Discovery Period applicable to this Contract or the existing policy or policies that shall continue to be maintained for 12 months after the completion of the Work under this Contract without advancing the retroactive date.

5-4.2.6 Contractors Builders Risk Property Insurance.

1. You shall provide at your expense, and maintain until Final Acceptance of the Work, a Special Form Builders Risk Policy or Policies. This insurance shall be in an amount equal to the replacement cost of the completed Work (without deduction for depreciation) including the cost of excavations, grading, and filling. The policy or policies limits shall be 100 percent of the value of the Work under this Contract, plus 15 percent to cover administrative costs, design costs, and the costs of inspections and construction management.

2. Insured property shall include material or portions of the Work located away from the Site but intended for use at the Site and shall cover material or portions of the Work in transit. The policy or policies shall include as insured property scaffolding, falsework, and temporary buildings located at the Site. The policy or policies shall cover the cost of removing debris, including demolition.

3. The policy or policies shall provide that all proceeds shall be payable to the City as Trustee for the insured, and shall name the City, the Contractor, Subcontractors, and Suppliers of all tiers as named insured. The City, as Trustee, will collect, adjust, and receive all monies that become due and payable under the policy or policies, may compromise any and all claims , and will apply the proceeds of this insurance to the repair, reconstruction, or replacement of the Work.

4. Any deductible applicable to the insurance shall be identified in the policy or policies documents. The responsibility for paying the part of any loss not covered because of the deductibles shall be apportioned among the parties, except for the City, as follows: if there is more than one claimant for a single occurrence, then each claimant shall pay a pro-rata share of the per occurrence deductible based upon the percentage of their paid claim to the total paid for insured. The City shall be entitled to 100 percent of its loss. You shall pay the City any portion of the loss not covered because of a deductible; at the same time the proceeds of the insurance are paid to the City as Trustee.

5. Any insured, other than the City, making claim to which a deductible applies shall be responsible for 100 percent of the loss not insured because of the deductible.

5-4.3 **Rating Requirements.** Except for the State Compensation Insurance Fund, all insurance required by this Contract shall be carried only by responsible insurance companies with a rating of, or equivalent to, at least "A-, VI" by A.M. Best Company, that are authorized by the California Insurance Commissioner to do business in the state of California, and that have been approved by the City.

5-4.3.1 **Non-Admitted Carriers.** The City will accept insurance provided by non-admitted, "surplus lines" carriers only if the carrier is authorized to do business in the state of California and is included on the List of Approved Surplus Lines Insurers (LASLI list).

All policies of insurance carried by non-admitted carriers shall be subject to all of the requirements for policies of insurance provided by admitted carriers described in this Contract.

5-4.4 **Evidence of Insurance.** You shall furnish the City with original Certificates of Insurance, including all required amendatory endorsements (or copies of the applicable policy language effecting coverage required by this clause), prior to your commencement of Work under this Contract. In addition, The City reserves the right to require complete, certified copies of all required insurance policies, including endorsements, required by these specifications, at any time.

5-4.5 **Policy Endorsements.**

5-4.5.1 **Commercial General Liability Insurance.**

5-4.5.1.1 **Additional Insured.** To the fullest extent permitted by law and consistent with the limiting provisions set forth at California Civil Code section 2782, California Insurance Code section 11580.04, and any applicable successor statutes limiting indemnification of public agencies that bind the City, the policy or policies shall be endorsed to include as an Additional Insured the City and its respective elected officials, officers, employees, agents, and representatives, with respect to liability arising out of:

i. Ongoing operations performed by you or on your behalf,
ii. your products,
iii. your work, e.g., your completed operations performed by you or on your behalf, or
iv. premises owned, leased, controlled, or used by you.

5-4.5.1.2 **Primary and Non-Contributory Coverage.** The policy shall be endorsed to provide that the coverage with respect to operations, including the completed operations, if appropriate, of the Named Insured is primary to any insurance or self-insurance of the City and its elected officials, officers, employees, agents and representatives. Further, it shall provide that any insurance maintained by the City and its elected officials, officers, employees, agents and representatives shall be in excess of your insurance and shall not contribute to it.

5-4.5.1.3 **Project General Aggregate Limit.** The policy or policies shall be endorsed to provide a Designated Construction Project General Aggregate Limit that will apply only to the Work. Only claims payments which arise from the Work shall reduce the Designated Construction Project General Aggregate Limit. The Designated Construction Project General Aggregate Limit shall be in addition to the aggregate limit provided for the products-completed operations hazard.

5-4.5.2 **Workers' Compensation Insurance and Employers Liability Insurance.**

5-4.5.2.1 **Waiver of Subrogation.** The policy or policies shall be endorsed to provide that the insurer will waive all rights of subrogation against the City and its respective elected officials, officers, employees, agents, and representatives for losses paid under the terms of the policy or policies and which arise from Work performed by the Named Insured for the City.

5-4.5.3 Contractors Pollution Liability Insurance Endorsements.

5-4.5.3.1 Additional Insured. To the fullest extent permitted by law and consistent with the limiting provisions set forth at California Civil Code section 2782, California Insurance Code section 11580.04, and any applicable successor statutes limiting indemnification of public agencies that bind the City, the policy or policies shall be endorsed to include as an Additional Insured the City and its respective elected officials, officers, employees, agents, and representatives, with respect to liability arising out of:

a. Ongoing operations performed by you or on your behalf,

b. your products,

c. your work, e.g., your completed operations performed by you or on your behalf, or

d. premises owned, leased, controlled, or used by you.

5-4.5.3.2 Primary and Non-Contributory Coverage. The policy or policies shall be endorsed to provide that the insurance afforded by the Contractors Pollution Liability Insurance policy or policies is primary to any insurance or self-insurance of the City and its elected officials, officers, employees, agents and representatives with respect to operations including the completed operations of the Named Insured. Any insurance maintained by the City and its elected officials, officers, employees, agents and representatives shall be in excess of your insurance and shall not contribute to it.

5-4.5.3.3 Severability of Interest. For Contractors Pollution Liability Insurance, the policy or policies shall provide that your insurance shall apply separately to each insured against whom claim is made or suit is brought, except with respect to the limits of the insurer's liability and shall provide cross-liability coverage.

5-4.5.4 Contractors Hazardous Transporters Pollution Liability Insurance Endorsements.

5-4.5.4.1 Additional Insured. To the fullest extent permitted by law and consistent with the limiting provisions set forth at California Civil Code section 2782, California Insurance Code section 11580.04, and any applicable successor statutes limiting indemnification of public agencies that bind the City, the policy or policies shall be endorsed to include as an Additional Insured the City and its respective elected officials, officers, employees, agents, and representatives, with respect to liability arising out of:

a. Ongoing operations performed by you or on your behalf,

b. your products,

c. your work, e.g., your completed operations performed by you or on your behalf, or

d. premises owned, leased, controlled, or used by you.

5-4.5.4.2 Primary and Non-Contributory Coverage. The policy or policies shall be endorsed to provide that the insurance afforded by the Contractors Pollution Liability Insurance

policy or policies is primary to any insurance or self-insurance of the City and its elected officials, officers, employees, agents and representatives with respect to operations including the completed operations of the Named Insured. Any insurance maintained by the City and its elected officials, officers, employees, agents and representatives shall be in excess of your insurance and shall not contribute to it.

5-4.5.4.3 **Severability of Interest.** For Contractors Hazardous Transporters Pollution Liability Insurance, the policy or policies shall provide that your insurance shall apply separately to each insured against whom claim is made or suit is brought, except with respect to the limits of the insurer's liability, and shall provide cross-liability coverage.

5-4.5.5 **Builders Risk Endorsements.**

5-4.5.5.1 **Waiver of Subrogation.** The policy or policies shall be endorsed to provide that the insurer will waive all rights of subrogation against the City, and its respective elected officials, officers, employees, agents, and representatives for losses paid under the terms of the policy or policies and that arise from Work performed by the Named Insured for the City.

5-4.5.5.2 **Builders Risk – Partial Utilization.** If the City desires to occupy or use a portion or portions of the Work prior to Acceptance,, the City will notify you, and you shall immediately notify your Builder's Risk insurer and obtain an endorsement that the policy or policies shall not be cancelled or lapse on account of any use or occupancy. You shall obtain the endorsement prior to the City's occupation and use.

5-4.6 **Deductibles and Self-Insured Retentions.** You shall disclose deductibles and self-insured retentions to the City at the time the evidence of insurance is provided. The City may require you to purchase coverage with a lower retention or provide proof of ability to pay losses and related investigations, claim administration, and defense expenses within the retention. The policy language shall provide, or be endorsed to provide, that the self-insured retention may be satisfied by either the named insured or City.

5-4.7 **Reservation of Rights.** The City reserves the right, from time to time, to review your insurance coverage, limits, deductibles, and self-insured retentions to determine if they are acceptable to the City. The City will reimburse you, without overhead, profit, or any other markup, for the cost of additional premium for any coverage requested by the Engineer, but not required by this Contract.

5-4.8 **Notice of Changes to Insurance.** You shall notify the City, in writing, 30 days prior to any material change to the policies of insurance provided under this Contract. This written notice is in addition to the requirements of paragraph 6 of Section 5-4.1. Policies of insurance shall provide that the City is entitled to 30 days advance written notice of cancellation or non-renewal of the policy or 10 days advance written notice for cancellation due to non-payment of premium. Maintenance of specified insurance coverage is a material element of the Contract. Your failure to maintain or renew

coverage and to provide evidence of renewal during the term of the Contract may be treated by the City as a material breach of the Contract.

5-4.9 **Excess Insurance.** Policies providing excess coverage shall follow the form of the primary policy or policies, including, all endorsements.

5-7.1.4 **Emergency Drills** To the "WHITEBOOK", Item 1, ADD the following

a) You shall participate in the City's initiated emergency drills.

SECTION 6 – PROSECUTION AND PROGRESS OF THE WORK

6-1.5.2 **Excusable Non-Compensable Delays.** To the "WHITEBOOK", Item 1, ADD the following:

d) Delays caused by State or County Health Department orders in response to COVID-19.

ADD:

6-6.1.1 **Environmental Document.**

1. The City of San Diego has prepared a **Notice of Exemption** for **PURE WATER PROGRAM CENTRAL AREA SMALL SCALE FACILITY**, Project No. **B-21151**, as referenced in the Contract Appendix. You shall comply with all requirements of the **Notice of Exemption** as set forth in **Appendix A.**

2. Compliance with the City's environmental document shall be included in the Contract Price, unless separate bid items have been provided.

SECTION 7 – MEASUREMENT AND PAYMENT

7-3.1 **General.** To the "WHITEBOOK", ADD the following:

3. The Lump Sum Bid item for "**Construction of Central Area Small-Scale Facility"** shall include the construction of the Central Area Small-Scale Facility as specified in the Plans, Contract Documents, and Technicals Section 01 29 00. 1.10.

7-3.11 **Compensation Adjustments for Price Index Fluctuations.** To the "WHITEBOOK", ADD the following:

5. This Contract **is not** subject to the provisions of The "WHITEBOOK" for Compensation Adjustments for Price Index Fluctuations for paving asphalt.

SECTION 8 - FACILITIES FOR AGENCY PERSONNEL

8-2 **FIELD OFFICE FACILITIES.** To the "WHITEBOOK", ADD the following.

1. Provide a Class "A" Field Office

SECTION 402 – UTILITIES

402-6 **COOPERATION.** To the "WHITEBOOK", ADD the following:

1. Notify SDG&E at least **10 Working Days** prior to excavating within 10 feet of SDG&E Underground High Voltage Transmission Power Lines (69 KV and higher).

SECTION 1001 – CONSTRUCTION BEST MANAGEMENT PRACTICES (BMPs)

1001-1 **GENERAL.** To the "WHITEBOOK", ADD the following:

8. Based on a preliminary assessment by the City, this Contract is subject to **WPCP**.

TECHNICALS

The City of SAN DIEGO Public Utilities

CENTRAL AREA SMALL-SCALE FACILITY

ISSUED FOR CONSTRUCTION

SPECIFICATIONS

OCTOBER 2022

Stantec Brown AND Caldwell Trussell TECHNOLOGIES INC

451 A STREET, SUITE 1500, SAN DIEGO, CALIFORNIA, 92101 (858) 514-8822

THE ENGINEERS WHOSE SEALS AND SIGNATURES ARE INCLUDED BELOW ARE RESPONSIBLE FOR THE DEVELOPEMENT OF THE SPECIFICATIONS

09/14/2022

09/14/2022

09/14/2022

09/14/2022

09/14/2022

09/14/2022

REGISTERED PROFESSIONAL ENGINEER
PETER H. FU
No. M34275
EXP. 12-31-22
MECHANICAL
STATE OF CALIFORNIA
09/14/2022

REGISTERED PROFESSIONAL ENGINEER
PATRICK J STAHL
No. C82053
Exp. 3-31-2024
CIVIL
STATE OF CALIFORNIA
09/14/2022

REGISTERED PROFESSIONAL ENGINEER
SANG V. VO
No. E20291
Exp. 03-31-23
ELECTRICAL
STATE OF CALIFORNIA
09/14/2022

REGISTERED PROFESSIONAL ENGINEER
DAVID WILCOXSON
No. CS7213
Exp. 8-30-22
CONTROL SYSTEM
STATE OF CALIFORNIA
09/14/2022

City of San Diego Pure Water Program
Central Area Small-Scale Facility Design Services
Technical Specifications
TABLE OF CONTENTS

Division 01 – General Requirements

01 11 00 Summary of Work
01 29 00 Payment Procedures
01 31 13 Project Coordination
01 31 19 Project Meetings
01 32 00 Construction Progress Documentation
01 33 00 Submittal Procedures
01 33 22 Web Based Construction Document Management
01 42 13 Abbreviations and Acronyms
01 43 33 Manufacturer's Field Services
01 45 16.13 Contractor Quality Control
01 45 33 Special Inspection, Observation, and Testing
01 50 00 Temporary Facilities and Controls
01 61 00 Common Product Requirements
01 74 19 Construction Waste Management and Disposal
01 75 18 Disinfection
01 77 00 Closeout Procedures
01 78 23 Operations and Maintenance Data
01 88 15 Anchorage and Bracing
01 91 13 General Commissioning Requirements
01 91 14 Testing and Startup
01 99 99 Reference Forms

Division 03 – Concrete

03 11 00 Concrete Forming
03 20 00 Concrete Reinforcing
03 30 00 Cast-in-Place Concrete
03 30 50 Cast-in-Drilled Hole Piles
03 60 00 Grouting

Division 05 – Metals

05 05 14 Hot-Dip Galvanizing
05 05 20 Anchor Bolts
05 50 00 Metal Fabrications

Division 06 – Wood, Plastics, and Composites

06 05 73 Wood Treatment
06 10 00 Rough Carpentry
06 74 13 Fiberglass Reinforced Gratings

Division 09 – Finishes

09 90 00 Protective Coating

Division 10 – Specialties

10 14 00 Signage

Division 13 – Special Construction

13 34 19 Canopy Systems
13 34 23.25 Prefabricated Electrical Equipment Enclosure

Division 26 – Electrical

26 05 00 Common Work Results for Electrical
26 05 19 Low-Voltage Electrical Power Conductors and Cables
26 05 26 Grounding and Bonding for Electrical Systems
26 05 33 Raceways and Boxes for Electrical Systems
26 05 74 Arc Flash Analysis, Short Circuit Study, and Protective Device Coordination Report
26 08 00 Commissioning of Electrical Systems
26 09 16 Electrical Controls and Relays
26 22 00 Low-Voltage Transformers
26 24 16 Panelboards
26 24 19 Motor-Control Centers

26 27 26 Wiring Devices
26 36 13 Manual Transfer Switches
26 51 19 LED Lighting

Division 31 – Earthwork

31 10 00 Site Clearing
31 23 00 Excavation and Fill

Division 32 – Exterior Improvements

32 17 23 Pavement Markings

Division 40 – Process Integration

40 05 01 Piping Systems
40 05 06.13 Joint Gaskets for Push-on Joints
40 05 06.16 Piping Connections
40 05 06.23 Expansion Joints and Flexible Metal Hose
40 05 06.33 Piping Appurtenances
40 05 07 Hangers and Supports for Process Piping
40 05 07.13 Seismic Restraints for Piping
40 05 07.16 Expansion Control for Piping
40 05 31 Thermoplastic Process Pipe
40 05 31.17 PVC Gravity Sewer, Drain, Waste, Vent Pipe and Fittings
40 05 31.53 PVDF Pipe
40 05 45 Piping System Identification
40 05 57.13 Manual Actuators
40 05 57.23 Powered Actuators
40 05 59.23 Fabricated Slide Gates
40 05 60 Valves
40 05 62.16 Eccentric Plug Valves for Liquid Service
40 05 63.03 Stainless Steel Threaded Ball Valves
40 05 63.06 PVC Ball Valves
40 05 63.08 Stainless Steel Flanged Ball Valves
40 05 63.09 Steel Ball Valves

40 05 63.53 PVDF Ball Valves
40 05 64 Butterfly Valves
40 05 65.23 Swing Check Valves
40 05 65.26 PVC Swing Check Valves
40 05 65.29 Double Disk Check Valves
40 05 65.30 Thermoplastic Check Valves
40 05 66.04 Globe Valves
40 05 66.23 Needle Valves
40 05 67.13 Backflow Preventers
40 05 72 Specialty Valves and Eyewash Stations
40 05 72.82 PVC Degassing Valves
40 05 78.13 Air/Vacuum Valves for Water Service
40 05 78.23 Air/Vacuum Valves for Wastewater Service
40 06 20.13 Power Actuated Valve and Gate Schedule for Process Services
40 42 00 Insulation for Exposed Piping and Equipment
40 91 00 Process Control and Instrumentation Systems
40 91 00-A Appendix A Instrument List
40 91 00-B Appendix B I/O List
40 91 02 In-line Liquid Flow Measuring Systems
40 91 03 Liquid Flow Detection Devices
40 91 06 Level Measuring Systems
40 91 07 Level Detection Switches
40 91 08 Pressure Measuring Devices
40 91 09 Pressure Detection Switches
40 91 10 Temperature Measuring
40 91 12 Process Analyzer Measuring Systems
40 92 00 Control Panels
40 93 00 Plant Control Philosophy
40 95 10 PLC Based Control Systems Hardware
40 95 20 PLC Based Control Systems Software

Division 43 – Process Gas and Liquid Handling, Purification

43 05 11 General Requirements for Equipment
43 05 13 Rigid Equipment Mounts

43 05 14 Machine Alignment
43 05 17 Vibration and Critical Speed Limitations
43 05 21 Common Motor Requirements for Equipment
43 11 33 Helical Screw Rotary Lobe Positive Displacement Blowers
43 23 03 General Requirements for Centrifugal Pumps
43 23 11 Vertical Inline Multistage Centrifugal Pumps
43 23 56.11 Self-Priming Non-Clog Centrifugal Pumps
43 23 89.11 Horizontal, Constant Speed, End Suction, Centrifugal Pumps
43 23 89.13 Horizontal, Variable Speed, End Suction, Centrifugal Pumps
43 24 41 Positive Displacement Rotary Lobe Pumps
43 25 40.01 Packaged Drain Pump Stations
43 40 04 Welded Steel Tanks
43 41 48 Polyethylene Tanks

Division 46 – Water and Wastewater Equipment

46 07 10 Chemical Systems
46 24 23 Inline Grinders
46 31 52 Ozone / Biological Activated Carbon (BAC) System
46 31 54 Ozone Contactor
46 33 42.16 Hydraulically Driven Diaphragm Pumps
46 33 44 Peristaltic Metering Pumps
46 41 17 Inline Static Mixers and Injectors
46 41 40 Biological Nutrient Removal (BNR) System
46 41 41 Top-Entering Tank Mixers
46 51 36 Fine Bubble Diffusion Equipment
46 61 33 Membrane Bioreactor System
46 61 36 Membrane Filtration System
46 61 73 Automatic Strainers
46 63 23.01 Conventional Reverse Osmosis Systems
46 63 23.02 Closed Circuit Reverse Osmosis System
46 63 23.03 Flow Reversal Reverse Osmosis System
46 63 23.04 Reverse Osmosis Membrane
46 63 24 RO CIP System
46 66 13 Ultraviolet / Advanced Oxidation Process

THIS PAGE INTENTIONALLY LEFT BLANK

SECTION 01 11 00
SUMMARY OF WORK

PART 1 GENERAL

1.01 WORK COVERED BY CONTRACT DOCUMENTS

A. The completed Work will provide Owner with a demonstration facility [termed the Central Area Small-Scale Facility (CASSF)] to prove the ability of the full-scale plants [Central Area Water Reclamation Plant (CAWRP) and Central Area Pure Water Facility (CAPWF)] to meet regulatory requirements. The Work includes, but is not limited to the items listed below, as more fully described in the Drawings and the technical specifications:
   1. Process facilities
      a. Primary Influent and Primary Effluent Feed Pumps
      b. Blend Tank
      c. Biological Nutrient Removal (BNR) System
      d. Membrane Bioreactor (MBR) System
      e. Pipe Loop
      f. Ozone Treatment
      g. Biological Activated Carbon Filtration
      h. Membrane Filtration
      i. Reverse Osmosis
      j. Ultraviolet / Advanced Oxidation Process
   2. Support systems
      a. Chemical Delivery and Storage Systems
      b. Electrical and Control
      c. Waste Conveyance System
   3. Site work
   4. Minor Demolition work as shown on the Drawings

B. The CASSF will include two separate treatment trains to demonstrate treatment requirements for discharging product water either to larger San Vicente Reservoir or to the smaller Murray Reservoir from the future CAPWF.

C. The CASSF shall have a minimum operating period of 15 months after fully commissioned. Either the City or a designated third party will operate the CASSF after fully commissioned. The end of operating period is linked to the startup of the ongoing North City Pure Water Facility (NCPWF) and related works.

PART 2 PRODUCTS (NOT USED)

PART 3 EXECUTION (NOT USED)

END OF SECTION

THIS PAGE INTENTIONALLY LEFT BLANK

SECTION 01 29 00
PAYMENT PROCEDURES

PART 1 GENERAL

1.01 WORK REQUIRED OF THIS SECTION

A. Payment for the various items of the Bid Schedule, as further specified herein, shall include all compensation to be received by the Contractor for furnishing all tools, equipment, supplies, and manufactured articles, and for all labor and services, operations, and incidentals appurtenant to the items of Work being described here and within the plans, specifications, and Contract Documents, as necessary to complete the various items of the Work all in accordance with the requirements of the Contract Documents, including all appurtenances thereto, and including all costs of permits and cost of compliance with the regulations of public agencies having jurisdiction, including Safety and Health Requirements of the California Division of Industrial Safety and the Occupational Safety and Health Administration of the U.S. Department of Labor (OSHA). No separate payment will be made for any item that is not specifically set forth in the Bid Schedule, and all costs therefore shall be included in the Contract Price.

B. Work shall include all Civil, Structural, Mechanical, Electrical, Instrumentation and Control, Coatings, and any temporary works required to support each Bid Item.

1.02 RELATED SECTIONS

A. The Work of the following Section applies to Work of this Section. Other Sections of the Work not referenced below shall also apply to the extent required for proper performance of the Work.
   1. Bid Schedule.
   2. Section 01 32 00 Construction Progress Documentation
   3. Section 01 33 22 Web Based Document Management

1.03 SUBMITTALS

A. Informational Submittals:
   1. Schedule of Values: Submit based on a roll up of the cost-loaded schedule described in Section 01 32 00 CONSTRUCTION PROGRESS DOCUMENTATION.
   2. Schedule of Estimated Progress Payments: Submit based on current approved Schedule of Values.
   3. Record Drawing Red-lines: Update and deliver monthly as required by the Construction Manager.
   4. Application for Payment: Submit on Owner's form.
   5. Final Application for Payment.

1.04 CASH ALLOWANCES

A. Where included, cash allowances will be administered in accordance with the Contract requirements.

B. Submit, with application for payment, invoice showing the date of purchase, labor costs, expenses, and the total price for all allowance items.

C. Cash allowances shall be paid based on actual work performed up to the amount listed in the Bid Schedule. The Owner shall authorize the use of the cash allowances on an as needed basis.

D. Cash allowances are further described as:
   1. Contingency (Field Orders)
   2. Building Permit Fees.

1.05 SCHEDULE OF VALUES

A. Prepare a separate Schedule of Values for each schedule of the Work under the Agreement, using the Cost ID activity code specified in Section 01 32 00 CONSTRUCTION PROGRESS DOCUMENTATION.

B. Upon request of Construction Manager, provide documentation to support the accuracy of the Schedule of Values.

C. Unit Price Work: Reflect unit price quantity and price breakdown from conformed Bid Form.

D. Limitations:
   1. The values of the activities listed below are limited as indicated. The limit is the percent of the Total Contract Price.

ACTIVITY	LIMIT
Mobilization	1.0 Percent, maximum
Contractor Quality Control Program	0.5 Percent, minimum
180-Day Schedule Approval	0.25 Percent
Baseline Schedule Approval	0.5 Percent
O&M Data (Manuals)	1.0 Percent-minimum
Functional Testing	1.5 Percent-minimum
Performance Testing	1.0 Percent-minimum
Project Record Documents	0.5 Percent-minimum
Demobilization	0.5 Percent-minimum

2. Mobilization: Payment for mobilization work shall be distributed equally over the first 2 progress payments up to the bid amount of the Mobilization bid item (per Whitebook 7-3.4.1). Mobilization includes:
   a. Project Manager on site full time.
   b. Plant and construction equipment for activities for first month on site.
   c. Field office setup with utilities.
   d. Fire protection established.
   e. Construction yard setup with storage and maintenance facilities and utilities setup.
   f. Safety Plan submitted and required notices posted.
   g. Initial Quality Control Plan submitted.
   h. QC Manager on site full time.
   i. Permits acquired for temporary facilities.
3. Contractor Quality Control Program:
   a. Payment for Contractor Quality Control will be prorated based on progress towards project completion.
4. 180-Day Schedule Approval:
   a. Payment will be made upon approval of the 180-day schedule as specified in Section 01 32 00 CONSTRUCTION PROGRESS DOCUMENTATION.
5. Baseline Schedule Approval:
   a. Payment will be made on approval of the Baseline schedule as specified in Section 01 32 00 CONSTRUCTION PROGRESS DOCUMENTATION.
6. O&M Data (Manuals):
   a. The Contractor and Construction Manager shall meet to determine the total number of O&M Data (Manuals) for the contract. The value of the O&M Data shall be distributed equally across the total number of O&M Data for the contract.
   b. A Draft, Draft-Final and Final submittal is required for each O&M Data (Manual). The Draft, Draft-Final and Final submittals will be assigned 50%, 25% and 25%, respectively of the calculated value for each Manual. Payment will be made upon acceptance of each submittal.
7. Functional Testing:
   a. Payment will be prorated based upon completion of the functional testing activities. Refer to the Section 01 91 13 GENERAL COMMISSIONING REQUIREMENTS and Section 01 91 14 TESTING AND STARTUP for details on functional testing activities.
8. Performance Testing
   a. Payment will be pro-rated based upon completion of all performance testing activities as described in the Section 01 91 14 TESTING AND STARTUP.
9. Project Record Documents:
   a. Progress payments for project record (as-built) documentation will be made based on the estimated percent complete of the quantity of documents submitted.

10. Demobilization:
    a. Submittal of warranties.
    b. Removal of plant and construction equipment.
    c. Removal of field office, construction yards and related facilities, utilities and project signs.
    d. Cleanup and disposal of materials, supplies, equipment and debris.
    e. Restoration of areas, roads and other facilities damaged or altered as a result of the Work.

E. An unbalanced or front-end loaded schedule will not be acceptable. Acceptable Schedule of Values will be required prior to submittal of first Application for Payment.

F. Summation of the complete Schedule of Values representing all the Work shall equal the Contract Price.

G. Use Schedule of Values Form provided by Owner.

H. Schedule of Values shall correlate with cost-loaded construction schedule.

1.06 APPLICATION FOR PAYMENT

A. Transmittal Summary Form: Attach one Summary Form with each detailed Application for Payment for each schedule and include Request for Payment of Materials and Equipment on Hand as applicable. Execute certification by authorized officer of Contractor.

B. Use detailed Application for Payment Form provided by Owner.

C. Provide separate form for each schedule as applicable.

D. Include accepted Schedule of Values for each schedule or portion of lump sum Work and the unit price breakdown for the Work to be paid on a unit priced basis.

E. Include separate line item for each Change Order and Work Change Directive executed prior to date of submission. Provide further breakdown as requested by the Construction Manager.

F. Preparation:
    1. Submit Application for Payment, including a Transmittal Summary Form and detailed Application for Payment Form(s) for each schedule as applicable, a listing of materials on hand for each schedule as applicable, and such supporting data as may be requested by Construction Manager.

G. Progress payments do not constitute acceptance of the Work or a waiver of any terms or conditions of the Contract.

1.07 PAYMENT - GENERAL

A. Payment for all Lump Sum Work shown or specified in Contract Documents is included in the Contract Price. Payment will be based on a percentage complete basis for each line item of the accepted Schedule of Values.

B. Payment for the various items of the Bid Schedule, as further specified herein, shall include all compensation to be received by the Contractor for furnishing all tools, equipment, supplies, and manufactured articles, and for all labor and services, operations, and incidentals appurtenant to items of Work being described here and within the plans, specifications, and Contract Documents, as necessary to complete the various items of the Work all in accordance with the requirements of the Contract Documents, including all appurtenances thereto, and including all costs of permits and cost of compliance with the regulations of public agencies having jurisdiction, including Safety and Health Requirements of the California Division of Industrial Safety and the Occupational Safety and Health Administration of the U.S. Department of Labor (OSHA). No separate payment will be made for any item that is not specifically set forth in the Bid Schedule, and all costs therefore shall be included in the contract price.

C. Payment for Procured Equipment:
   1. Payment for procured equipment is divided into two types of equipment: Major Equipment as identified in Attachment 1 List if Major Equipment, and all other procured equipment. Major Equipment will be paid according to the following milestones:
      a. Purchase Order = 5%. An executed purchase order must accompany the payment request.
      b. Submittal Acceptance = 5%. Approval of the equipment submittal is required prior to payment of this amount.
      c. Fabrication = 65%. Fabrication, including factory testing, may be paid in part provided adequate documentation is presented and accepted at the monthly Schedule Preview Meeting.
      d. Delivery = 10%. Proof of onsite delivery (or proper handling of stored materials) must accompany the payment request.
      e. Pre-Operational Checkouts/Installation Certification = 10%. Proof of Installation Certification by the Manufacturer must accompany the payment request.
      f. Operational Checkouts/Performance Verification = 5%. Documentation of successful operational checkouts/performance verification must be provided.
      g. The sum of items listed above shall not exceed the documented quotation amount or invoice amount.
   2. All other equipment (i.e., non-Major Equipment) will be paid upon submittal and acceptance of the required documents, including:
      a. Paid invoices and proof of payment for materials on hand.
      b. Proof of proper storage or stored materials.
      c. Quantity verification (load tickets, etc.).

d. Any required certifications.

1.08 NONPAYMENT FOR REJECTED OR UNUSED PRODUCTS

A. Payment will not be made for the following:
   1. Loading, hauling, and disposing of rejected material.
   2. Quantities of material wasted or disposed of in manner not called for under Contract Documents.
   3. Rejected loads of material, including material rejected after it has been placed by reason of failure of Contractor to conform to provisions of Contract Documents.
   4. Material not unloaded from transporting vehicle.
   5. Defective Work not accepted by Owner.
   6. Material remaining on hand after completion of Work.

1.09 RETENTION

A. The Owner shall retain a percentage of each progress payment in accordance with Section 7-3.2 Partial and Final Payment of Part 1 Special Provisions – General of the Contract Documents. The retained amount is available for the protection and payment of the person(s), mechanics, subcontractors, or materialmen who perform labor upon the Contract or Work thereunder, and the persons who supply such person(s), or subcontractors with components and supplies for carrying on such Work.

B. Pursuant to Section 22300 of the Public Contract Code of the State of California, the Contractor has the option, at its expense, to deposit securities with an Escrow Agent as a substitute for retention earnings required to be withheld by the City. Securities eligible for such substitution are bank or savings and loans certificates of deposit or such securities which are eligible for investment pursuant to Government Code Section 16430. As to any such security or securities so substituted for monies withheld, the Contractor shall be the beneficial owner of same and shall receive any interest thereon. Such security shall, at the request and expense of the Contractor, be deposited with the City or with a State or Federally Chartered bank as the escrow agent who shall pay such monies to the Contractor upon notification by the City that payment can be made. Such notification will be given at the expiration of 35 days from the date of acceptance of the work, or as prescribed by law, provided however, that there will be a continued retention of the necessary securities to cover such amounts as are required by law to be withheld by properly executed and filed notices to stop payment, or as may be authorized by the Contract to be further retained.

1.10 MEASUREMENT AND PAYMENT

A. BONDS
   1. Payment is made for this Item per Section 1-7.2.1 of the City Whitebook.

B. MOBILIZATION

1. Payment is made for this Item for mobilization and demobilization as defined in Part 1.05 (refer to Whitebook 7-3.4.1).

C. WATER POLLUTION CONTROL PROGRAM (WPCP) DEVELOPMENT

1. Payment is made for this item for the development of the WPCP. This item shall consist of a complete WPCP in compliance with the San Diego Storm Water Standards. Payment under this bid item shall be made as the lump sum price named in the Bid Schedule.
2. The Schedule of Values for WPCP shall be itemized in accordance with Whitebook Section 1001-4.2.

D. WATER POLLUTION CONTROL PROGRAM (WPCP) IMPLEMENTATION

1. Payment is made for this item for the implementation of the WPCP. This item shall consist of a complete WPCP in compliance with the San Diego Storm Water Standards. Payment under this bid item shall be made as the lump sum price named in the Bid Schedule.
2. The Schedule of Values for WPCP shall be itemized in accordance with Whitebook Section 1001-4.2.

E. CENTRAL AREA SMALL-SCALE FACILITY

1. Payment is made for this item for the construction of the CASSF. This item shall include a complete and operational demonstration facility and all other appurtenant work necessary, all in accordance with the special provisions, plans numbered 0100179-D, and associated technical specifications. The work for CASSF includes all work not identified in the other bid items to provide a complete and workable system including but not limited to the following:
   a. Area 1: Primary Influent Pump Station consisting of the Primary Influent Pump, Grinder, and Strainer
   b. Area 2: Primary Effluent Pump Station consisting of the Primary Effluent Pump
   c. Area 3: Blending Tank and Pumping consisting of Blending Tank, Mixing Pump, BNR Feed Pump, and Automatic Strainers,
   d. Area 4: BNR System consisting of BNR Tank, Fine Bubble Diffusers, IMLR Pump, ML Feed Pump, Blowers, and Gates
   e. Area 5: MBR System consisting of the MBR Tank, MBR membranes, RAS Pump, Filtrate Pump, Blower, Compressed Air System, and CIP System
   f. Area 6: Pipe Loops consisting of pipe loops and the electrical Equipment Enclosure
   g. Area 7: Pure Water Facility consisting of Ozone / BAC System, Membrane Filtration System, multiple Reverse Osmosis Systems, UV/AOP System, and associated auxiliary systems
   h. Area 8: Chemical Storage and Feed System for various chemicals used for CASSF
   i. All associated Civil, Structural, Electrical, Instrumentation and Controls work shown on the Drawings and included in the Specifications for CASSF.

2. Payment under this bid item shall be made as the lump sum price named in the Bid Schedule.

F. FIELD ORDERS (EOC TYPE II) ALLOWANCE
1. Payment is made for this item per Section 7-3.9 of the City Whitebook.

G. BUILDING PERMIT (EOC TYPE I) FEES ALLOWANCE
1. Payment is made for this item from the allowance for building permit fees paid by the Contractor to the City in order to obtain and perfect permits associated with the CASSF Work within Point Loma Wastewater Treatment Plant. Payment for this item shall be made as an allowance amount named in the Bid Schedule.

H. BIOLOGICAL MONITORING AND REPORTING ALLOWANCE
1. Payment is made for this item from the bid item for biological monitoring and reporting to comply with the requirements of biological monitoring aspects of California Coastal Commission Permit Waiver 6-22-0244-W dated 09/07/2022. The biologist to be engaged by the Contractor shall monitor gnatcatcher prior to initiating construction and weekly during nesting season.
2. Payment for this item will be made in accordance with Whitebook Section 802-4, Item 1.d.

PART 2 PRODUCTS (NOT USED)

PART 3 EXECUTION (NOT USED)

END OF SECTION

CASSF MAJOR EQUIPMENT	
Specification Section	**Specific Product**
13 34 23.25	Prefabricated Electrical Equipment Enclosure
26 24 19	Motor Control Centers
40 95 10	PLC Based Control Systems Hardware
43 11 33	Helical Screw Rotary Blowers
43 23 56.11	Self-Priming Nonclog Centrifugal Pumps
43 23 89.11	ANSI Horizontal Constant Speed Centrifugal Pumps
43 23 89.13	ANSI Horizontal Variable Speed Centrifugal Pumps
43 41 48	XLHDPE Tanks
46 07 10	Chemical Systems
46 31 52	Ozone System
46 31 54	Ozone Contactor
46 33 42.16	Hydraulically Driven Diaphragm Pumps
46 33 44	Peristaltic Metering Pumps
46 41 40	BNR System
46 61 33	Membrane System for MBR
46 61 36	Membrane Filtration System
46 61 73	Automatic Strainers
46 63 23.01	Conventional RO System
46 63 23.02	Closed Circuit RO System
46 63 23.03	Flow Reversal RO System
46 63 23.04	Reverse Osmosis Membrane
46 63 24	RO CIP System
46 66 13	Ultraviolet/Advanced Oxidation System

THIS PAGE INTENTIONALLY LEFT BLANK

SECTION 01 31 13
PROJECT COORDINATION

PART 1 GENERAL

1.01 SUBMITTALS

A. Informational:
   1. Statement of Qualification (SOQ) for land surveyor or civil engineer.
   2. Photographs:
      a. Digital Images: Submit one copy of flash drive or DVD disc containing images within 5 days of being taken. Each image is to have a minimum file size of 1.4 Mb (1,400 Kb) so viewed resolution is high quality. The production of larger file sizes with higher resolution is encouraged.
   3. Video Recordings: Submit one copy, including updated copy of Project video log, within 5 days of being taken.
   4. Time Lapse Construction Video: Submit one copy of cumulative time lapse video of construction site on the first working day of each month.

1.02 RELATED WORK AT SITE

A. General:
   1. No specific projects will be ongoing at the designated CASSF site but the Point Loma Wastewater Treatment Plant may conduct operations and maintenance activities in the vicinity on the hydrogen peroxide system as well as any storage facilities nearby.
   2. Within the PLWTP, there would be ongoing operations and maintenance activities that the Contractor shall coordinate.

B. Power:
   1. The electrical facilities that will be providing power for CASSF will be tapped from the operating PLWTP. Coordination with PLWTP O&M will be required to complete the tie-in.

C. Applications Software Development:
   1. Application software for the CASSF Process Control and Instrumentation System (PCIS) will be performed by the Process Control and Instrumentation System Provider (PCISP). The PCISP will provide hardware and perform programming of the PCIS applications software for certain portions of PCIS. Refer to Section 40 91 00 – PROCESS CONTROLS AND INSTRUMENTATION SYSTEMS, and related Sections, for detailed information pertaining to PCIS hardware and application software programming.

2. Some of the critical signals from the CASSF will be transmitted to PLWTP for monitoring purposes. The signals will be hardwired to a location identified on Drawings. The Contractor shall coordinate with PLWTP the required shutdowns to make the connections. Sufficient (at least two weeks) notice shall be provided for this tie-in work.

1.03 UTILITY NOTIFICATION AND COORDINATION

A. Coordinate the Work with various utilities within Project limits. Notify applicable utilities prior to commencing Work, if damage occurs, or if conflicts or emergencies arise during the Work.
   1. Building Department: City of San Diego.

B. SDG&E Coordination
   1. The power feed for CASSF will be tapped from PLWTP as shown on the Drawings. No direct coordination with SDG&E will be required on this count. However, there are existing overhead powerlines that cross the CASSF site for which coordination will be required as detailed below.
   2. Contractor shall aide by SDG&E Standards, CPUC General Order 95, and OSHA requirements at all times. These are mainly applicable since there are overhead power lines crossing the site. Work restrictions include (but are not limited to) the following:
      a. Provide a clear route free of obstructions that would inhibit construction of overhead service facilities per SDG&E Standard SG 103.1
      b. Provide a “CAUTION OVERHEAD” signage under powerlines per CPUC General Order 95 Rule 39 Table 2-A.
      c. Maintain accessibility at all times to the existing overhead power lines per SDG&E Standards SG 004.5 and SG015.
         1) Provide H2O load bearing plating over any trenching for new storm drain or other purposes.
      d. All energized overhead facilities of any voltage classification shall have a minimum clearance of 10-ft measured horizontally and at a radius of 25-ft from an exposed tank, vent, or fill tube containing flammable or explosive mixtures per SDG&E Standard SD 019.
      e. Install vehicle impact cushion around each power pole per SDG&E Standard OH 218.
      f. Maintain the most restrictive minimum vehicle clearance of wires above thoroughfares per SDG&E Standard OH 224 or CPUC General Order 95 Rule 37 Table 1.
      g. Identify the work zone per OSHA requirements 1926.1408(A)(1).
      h. Contractor shall review the following to confirm the above list compiles with the latest requirements and any additional that may apply:

1) SDG&E Standards: https://www.sdge.com/builder- services/standards-manuals
2) CPUC General Order 95: http://docs.cpuc.ca.gov/publisheddocs/published/g000/m146/k646/146646565.pdf
3) OSHA: https://www.osha.gov/pls/oshaweb/owadisp.show_document?p_table=STANDARDS&p_id=19

1.04 PROJECT MILESTONES

A. General: Include the Milestones specified herein as a part of the Progress Schedule required under Section 01 32 00 CONSTRUCTION PROGRESS DOCUMENTATION.

B. Project Milestones: There are no interim milestones for the project, but it is critical to start the operation of the facility as scheduled or earlier.

1.05 WORK SEQUENCING/CONSTRAINTS

A. The PLWTP is located beyond the Navy property (and shall be accessed through the Navy property) and has the following known restrictions:
   1. Travel to and from site is restricted during normal day time hours (6.00 AM to 6.00 PM). If access is required beyond the normal day time hours, prior coordination is required with Navy.
   2. The Contractor shall comply with and coordinate with PLWTP security requirements. The PLWTP security will be controlling the site security and access to people to PLWTP. All visitors shall report at the guard shack located at the south end of PLWTP. Contractor shall coordinate with PLWTP on badging requirements for long term Contractor staff.
   3. The Contractor team shall follow PLWTP safety guidelines. PLWTP Safety Officer will brief site specific safety requirements at the beginning of the Contract.
   4. PLWTP has limited telephone coverage. As such telephone communications will be limited.
   5. There is no cell phone coverage within PLWTP.

B. An existing hydrogen peroxide line and electrical power to the hydrogen peroxide facility are routed through the proposed MBR facility of CASSF and will require relocation prior to starting any work there. The Contractor shall provide casing pipe as shown on the Drawings and coordinate the rerouting with PLWTP. PLWTP will arrange and complete the reroute of the hydrogen peroxide line. Contractor shall complete work noted on drawing C-11 including providing casing pipe, new electrical conduit, and new electrical pull box. After completion of work, Contractor shall allow a minimum of 45 work days for PLWTP to complete reroute of hydrogen peroxide line. Demolition

of conduits and existing hydrogen peroxide line may not begin until after PLWTP completes reroute of hydrogen peroxide line.

C. There is an existing 480 V panel and an120 V mini power center that needs to be protected in place. See drawings for details.

D. Include the following work sequences in the Progress Schedule:
   1. Performance tests of all equipment and subsystems required to support the listed process system Functional Tests.
   2. Functional Tests of the following process systems:
      a. Primary influent and effluent pumps complete with associated auxiliary systems such as grinders and strainers.
      b. BNR System complete with associated auxiliary systems such as strainers, pumps and blowers.
      c. MBR system complete with associated auxiliary systems such as pumps, blowers and compressed air system.
      d. Ozone System.
      e. BAC Filters.
      f. MF System.
      g. RO System.
      h. UV Advanced Oxidation System.
      i. Chemical Facility
   3. Functional and Performance testing of CASSF.

1.06 GENERAL SEQUENCING REQUIREMENTS

A. Electrical installed before functional testing of any facility requiring electrical.

B. Drainage functional before facility requiring drainage.

C. New piping installed and tested up to tie-in point(s) before shutdown(s).

1.07 FACILITY OPERATIONS

A. Continuous operation of Owner's facilities is of critical importance. Schedule and conduct activities to enable existing facilities to operate continuously, unless otherwise specified.

B. Perform Work continuously during critical connections and changeovers, and as required to prevent interruption of Owner's operations.

C. When necessary, plan, design, and provide various temporary services, utilities, connections, temporary piping and heating, access, and similar items to maintain continuous operations of Owner's facility.

D. Do not close lines, open or close valves, or take other action which would affect the operation of existing systems.

E. Process or Facility Shutdown and Operating Requirements:
   1. The following describes operating requirements and facilities which may be shutdown at some time during the Work:
      a. Provide 21 days advance written request for approval of need to shut down a process or facility to Owner and Construction Manager.
      b. Power outages will be considered upon 48 hours written request to Owner and Construction Manager. Describe the reason, anticipated length of time, and areas affected by the outage. Provide temporary provisions for continuous power supply to critical facility components. Shutdown of some of the major facilities would require as long a week or even longer notice periods due to the criticality of those facilities. Coordinate early with PLWTP for all shutdowns.

F. Provide safe, continuous access to process control equipment for plant operations personnel.

G. Maintain safe operation and maintenance access for all operating equipment at all times.
   1. For all operating equipment, reserve a minimum of 3 feet unencumbered workspace around equipment or as shown on the Contract documents.
      a. Areas reserved for operations and maintenance access for all operating equipment shall be separated from Contractor's working area with temporary orange plastic fencing or similar means.
      b. Storage of Contractor's equipment or materials in access area is prohibited.

H. Provide access on 1 hour advance notice to process control equipment for plant maintenance personnel and associated maintenance equipment.

I. Do not proceed with Work affecting a facility's operation without obtaining Owner's and Construction Manager's advance approval of the need for and duration of such Work.

J. Relocation of Existing Facilities:
   1. During construction, it is expected that minor relocations of Work will be necessary.
   2. Provide complete relocation of existing structures and Underground Facilities, including piping, utilities, equipment, structures, electrical conduit wiring, electrical duct bank, and other necessary items.

3. Use only new materials for relocated facility. Match materials of existing facility, unless otherwise shown or specified.
4. Perform relocations to minimize downtime of existing facilities.
5. Install new portions of existing facilities in their relocated position prior to removal of existing facilities, unless otherwise accepted by Construction Manager.
6. To stay away from the 20-feet setback on the east side (As shown on Civil Site Plan) and 40-feet setback from PLWTP property line on the west (to the west of Gatchel Road).

1.08 ADJACENT FACILITIES AND PROPERTIES

A. Examination:
1. After Effective Date of the Agreement and before Work at Site is started, Contractor, shall make a thorough examination of pre- existing conditions including existing buildings, structures, and other improvements in vicinity of Work, as applicable, which could be damaged by construction operations and condition shall be video tapped per requirements in Whitebook Section 400-1.
2. Periodic reexamination shall be performed to include, but not limited to, cracks in structures, settlement, leakage, and similar conditions. Conditions shall be videotaped per requirements in Whitebook Section 400-1.

B. Documentation:
1. Record and submit documentation of observations made on examination inspections in accordance with Article 1.10 Construction Photographs and Article 1.11 Audio-Video Recordings.
2. Such documentation shall be used as indisputable evidence in ascertaining whether and to what extent damage occurred as a result of

   Contractor's operations, and is for the protection of adjacent property owners, Contractor, and Owner.

1.09 CONSTRUCTION PHOTOGRAPHS

A. General:
1. Photographically document all phases of the Project including preconstruction, construction progress, and post-construction.
2. Construction Manager shall have the right to select subject matter and vantage point from which photographs are to be taken.

B. Preconstruction and Post-Construction:
1. After Effective Date of the Agreement and before Work at Site is started, and again upon issuance of Substantial Completion, take a minimum of 60 photographs of Site and property adjacent to perimeter of Site.

2. Particular emphasis shall be directed to structures both inside and outside the Site.
3. Format: Digital, minimum resolution of 20 megapixel.

C. Construction Progress Photos:
1. Photographically demonstrate progress of construction, showing every aspect of Site and adjacent properties as well as interior and exterior of new or impacted structures.
2. Weekly: Take 50 photographs using digital, minimum resolution of 20 megapixel.

D. Documentation:
1. Digital Images:
a. Electronic image shall have date taken embedded into image.
b. Archive using a commercially available photo management system that provides listing of photographs including date, keyword description, and direction of photograph.
c. Label file folders or database records with Project and Owner's name, and month and year images were produced.

1.10 AUDIO-VIDEO RECORDINGS

A. Prior to beginning the Work on Site or of a particular area of the Work, video Site and property adjacent to Site.

B. In the case of preconstruction recording, no work shall begin in the area prior to Construction Manager's review and approval of content and quality of video for that area.

C. Particular emphasis shall be directed to physical condition of existing vegetation, structures, and pavements within Site and areas adjacent to and within the right-of-way or easement, and on Contractor storage and staging areas.

D. Construction Manager shall have right to select subject matter and vantage point from which videos are to be taken.

E. Video recording shall be by a professional commercial videographer, experienced in shooting exterior and interior construction videos.

F. Video Format and Quality:
1. DVD format, with sound.
2. Video:
a. Produce bright, sharp, and clear images with accurate colors, free of distortion and other forms of picture imperfections.

b. Electronically, and accurately display the month, day, year, and time of day of the recording.

3. Audio:
   a. Audio documentation shall be done clearly, precisely, and at a moderate pace.
   b. Indicate date, project name, and a brief description of the location of recording, including:
      1) Facility name.
      2) Street names or easements.
      3) Addresses of private property.
      4) Direction of coverage, including engineering stationing, if applicable.

G. Documentation:
   1. DVD Label:
      a. DVD number (numbered sequentially, beginning with 001).
      b. Project name.
      c. Applicable location.
      d. Date and time of coverage.
   2. Project Video Log: Maintain an ongoing log that incorporates above noted label information for DVDs on Project.

1.11 TIME LAPSE CONSTRUCTION VIDEO

A. Provide a continuous-sequence time lapse construction video of the CASSF site beginning with mobilization and concluding with demobilization.

B. Location:
   1. Select a position, approved by the Owner and Construction Manager, for the time lapse video camera that will remain fixed for the entire duration of construction.
   2. Video camera location should provide maximum view of the entire Site from a public interest perspective.
   3. Provide a pole-mounted camera to achieve adequate height for enhanced visibility of the Site.

C. Equipment:
   1. Manufacturer: Time-Lapse Pro, iBEAM Construction Cameras, or equal.
   2. Digital single-lens reflex video camera capable of 4K ultra-HD time- lapse movies.
      a. 8.3-to-18-megapixel images.
      b. 4G LTE cellular communications.
      c. Power interruption remote alert.

1.12 REFERENCE POINTS AND SURVEYS

A. Location and elevation of benchmarks are shown on Drawings.

B. Contractor's Responsibilities:
   1. Provide additional survey and layout required to layout the Work.
   2. Check and establish exact location of existing facilities prior to construction of new facilities and any connections thereto.
   3. In event of discrepancy in data or staking provided by Owner, request clarification before proceeding with Work.
   4. Retain professional land surveyor or civil engineer registered in California who shall perform or supervise engineering surveying necessary for construction staking and layout.
   5. Maintain complete accurate log of survey work as it progresses as a Record Document.
   6. On request of Construction Manager, submit documentation.
   7. Provide competent employee(s), tools, stakes, and other equipment and materials as Construction Manager may require to:
      a. Establish control points, lines, and easement boundaries.
      b. Check layout, survey, and measurement work performed by others.
      c. Measure quantities for payment purposes.

PART 2 PRODUCTS (NOT USED)

PART 3 EXECUTION

3.01 CUTTING, FITTING, AND PATCHING

A. Cut, fit, adjust, or patch Work and work of others, including excavation and backfill as required, to make Work complete.

B. Obtain prior written authorization of Owner before commencing Work to cut or otherwise alter:
   1. Structural or reinforcing steel, structural column or beam, elevated slab, trusses, or other structural member.
   2. Weather-resistant or moisture-resistant elements.
   3. Efficiency, maintenance, or safety of element.
   4. Work of others.

C. Refinish surfaces to provide an even finish.
   1. Refinish continuous surfaces to nearest intersection.

2. Refinish entire assemblies.
3. Finish restored surfaces to such planes, shapes, and textures that no transition between existing work and the Work is evident in finished surfaces.

D. Restore existing work, underground facilities, and surfaces that are to remain in completed Work including concrete-embedded piping, conduit, and other utilities as specified and as shown on Drawings.

E. Make restorations with new materials and appropriate methods as specified for new Work of similar nature; if not specified, use recommended practice of manufacturer or appropriate trade association.

F. Fit Work airtight to pipes, sleeves, ducts, conduit, and other penetrations through surfaces and fill voids.

G. Remove specimens of installed Work for testing when requested by Engineer.

END OF SECTION

SECTION 01 31 19
PROJECT MEETINGS

PART 1 GENERAL

1.01 GENERAL

A. The Construction Manager will schedule physical arrangements for meetings throughout progress of the Work, prepare meeting agenda with regular participant input and distribute with written notice of each meeting, preside at meetings, record minutes to include significant proceedings and decisions, and reproduce and distribute copies of minutes within 5 days after each meeting to participants and parties affected by meeting decisions.

1.02 PRECONSTRUCTION CONFERENCE

A. Contractor shall be prepared to discuss the following subjects, as a minimum:
   1. Required schedules.
   2. Status of Bonds and insurance.
   3. Sequencing of critical path work items.
   4. Progress payment procedures.
   5. Project changes and clarification procedures.
   6. Use of Site, access, office and storage areas, security and temporary facilities.
   7. Major product delivery and priorities.
   8. Contractor’s safety plan and representative.

B. Attendees will include:
   1. Owner’s representatives.
   2. Construction Manager’s representatives.
   3. Contractor’s office representative.
   4. Contractor’s resident superintendent.
   5. Contractor’s quality control representative.
   6. Subcontractors’ representatives whom Contractor may desire or Engineer may request to attend.
   7. Engineer’s representatives.
   8. Others as appropriate.

1.03 ENVIRONMENTAL MITIGATION MONITORING AND REPORTING PROGRAM PRECONSTRUCTION CONFERENCE

A. The Contractor shall be required to discuss the following:

1. Discuss the Environmental Mitigation Monitoring and Reporting Program.

B. Attendees will include:
1. City's Mitigation Monitoring Coordination Section Construction Manager.
2. Owner's representatives.
3. Construction Manager's representatives.
4. Contractor's representatives.
5. Contractor's quality control representative.
6. Others as appropriate.

1.04 PRELIMINARY SCHEDULES REVIEW MEETING

A. As set forth in General Conditions and Section 01 32 00, CONSTRUCTION PROGRESS DOCUMENTATION.

B. Provide weekly look-ahead schedules for Progress Meetings (show one-week past, current week, and four weeks in advance)

1.05 PROGRESS MEETINGS

A. Construction Manager will schedule regular progress meetings at Site, conducted weekly to review the Work progress, Progress Schedule, Schedule of Submittals, Application for Payment, contract modifications, and other matters needing discussion and resolution.

B. Attendees will include:
1. Owner's representative(s), as appropriate.
2. Construction Manager's representative(s), as appropriate.
3. Contractor, Subcontractors, and Suppliers, as appropriate.
4. Engineer's representative(s).
5. Others as appropriate.

1.06 QUALITY CONTROL MEETINGS

A. In accordance with Section 01 45 16.13, CONTRACTOR QUALITY CONTROL

B. Scheduled by Construction Manager on regular basis and as necessary to review test and inspection reports, and other matters relating to quality control of the Work and work of other Contractors.

C. Attendees will include:
1. Contractor.

2. Owner
3. Contractor's designated quality control representative.
4. Subcontractors and Suppliers, as necessary.
5. Construction Manager's representatives.
6. Engineer's representatives, as necessary.

1.07 PROCESS INSTRUMENTATION AND CONTROL SYSTEMS (PICS) COORDINATION MEETINGS

A. Construction Manager will schedule as needed meetings at Site to review specific requirements of PICS work.

B. Attendees will include:
   1. Contractor.
   2. Owner.
   3. Construction Manager.
   4. PICS Subcontractor/Installer.
   5. Distributed Control System Provider.
   6. Engineer's representatives as required.

1.08 PREINSTALLATION MEETINGS

A. When required in individual Specification sections, convene at Site prior to commencing the Work of that section.

B. Require attendance of entities directly affecting, or affected by, the Work of that section.

C. Notify Construction Manager 5 days in advance of meeting date.

D. Provide suggested agenda to Construction Manager to include reviewing conditions of installation, preparation and installation or application procedures, and coordination with related Work and work of others.

1.09 FACILITY STARTUP MEETINGS

A. Schedule and attend a minimum of twenty facility startup meetings. The first of such meetings shall be held prior to submitting Facility Startup Plan, as specified in Section 01 91 14, TESTING, INTEGRATION AND STARTUP and shall include preliminary discussions regarding such plan.

B. Agenda items shall include, but not be limited to, content of Facility Startup Plan, coordination needed between various parties in attendance, and potential problems associated with startup.

C. Attendees will include:
   1. Contractor.
   2. Contractor's designated quality control representative.
   3. Subcontractors and equipment manufacturer's representatives whom Contractor deems to be directly involved in facility startup.
   4. Construction Manager.
   5. Engineer's representatives.
   6. Owner's operations personnel.
   7. Others as required by Contract Documents or as deemed necessary by Contractor or City.

1.10 OTHER MEETINGS

A. In accordance with Contract Documents and as may be required by Owner and Construction Manager.

PART 2 PRODUCTS (NOT USED)

PART 3 EXECUTION (NOT USED)

END OF SECTION

SECTION 01 32 00

CONSTRUCTION PROGRESS DOCUMENTATION

PART 1 GENERAL

1.01 GENERAL REQUIREMENTS

A. The work shall be executed with such progress as required to prevent any delay to this contract and to other projects or contractors working at the site. Compliance includes, but is not limited to, meeting contract milestone dates, compliance to scheduling submittals, working within any constraints and completion of all contract work within the allotted time.

B. The work specified in this section includes the preparation, submittal, and acceptance of a Baseline Schedule, construction progress schedules, schedule updates, recovery schedules, Time Impact Analysis (TIA) and revisions to the construction progress schedule. The construction schedule shall conform to the time provisions specified in the special provisions of the contract documents and the requirements of all other specified work sequence constraints set forth in the contract documents.

C. The Contractor shall prepare and submit a Construction Schedule in accordance with Section 6-1 of the 2021 Greenbook and 2021 Whitebook and requirements of this section. By preparing and submitting the Construction Schedule and monthly schedule updates, the Contractor represents that it can and intends to safely execute the contracted work and all portions thereof including all activities of subcontractors, equipment vendors, and suppliers including submittals and re-submittals within the specified times and constraints. The Contractor also represents that the bid price covers all costs associated with the execution of the Work in accordance with the construction schedule and contract documents.

D. This specification includes the cost loaded schedule requirements, consistent with Section 01 29 00 PAYMENT PROCEDURES, which shall form the basis for the pay application report and all monthly payment requests. These referenced sections shall be correlated and linked when preparing the monthly progress payment. The Schedule of Values shall be generated from the Oracle Primavera P6 current accepted schedule.

E. The City will review the schedule, and any updates or revisions, and any other schedule data for conformance to the Contract. Review and acceptance of the Baseline Construction Schedule and associated documents does not relieve the contractor of responsibility for the feasibility of the schedule, performance of any omitted work and completion of the work and milestones within the contract time.

1.02 DEFINITIONS

A. ACTIVITY: A discrete work element of a project that can be identified for planning, scheduling, and controlling the construction project. Activities included in a construction schedule consume time and resources.

B. PREDECESSOR ACTIVITY: An activity that precedes another activity in the network.

C. SUCCESSOR ACTIVITY: An activity that follows another activity in the network.

D. CODE OF ACCOUNTS: A unique lettering or numbering system in which letters or numbers are assigned to each unique component of the Work Breakdown Structure (WBS).

E. HARD LOGIC: Relationships with mandatory dependencies where the nature of the work itself dictates the order in which the activities should be performed. Construction of the walls before starting painting work is an example of mandatory dependency.

F. SOFT LOGIC: Also known as Discretionary Dependencies or Preferential Logic. Preferential logic that controls the critical path using constraints and lags will not be allowed.

G. HARD CONSTRAINTS: Override logical relationships and thereby prevent activities from being scheduled according to the logic. Hard Constraints include Mandatory Start, Mandatory Finish, Start On and Finish On.

H. CRITICAL PATH METHOD (CPM): A method of planning and scheduling a construction project where activities are arranged based on activity relationships. Network calculations determine when activities can be performed and the critical path of the Project.

I. CRITICAL ACTIVITIES: Activities on the critical path. To avoid project delays, work must start and finish on the planned early start and finish dates.

J. CRITICAL PATH: The longest connected chain of interdependent activities through the network schedule that establishes the maximum overall project duration or completion. There can only be one critical path for a project duration or a project milestone.

K. NEAR CRITICAL PATH: The Near Critical Path shall be defined as the “longest path” plus 15 working days total float.

L. FLOAT:

1. The measure of leeway in starting and completing an activity. Free float is the amount of time an activity can be delayed without adversely affecting the early start of the successor activity.

2. Total float is the measure of leeway in starting or completing an activity without adversely affecting the planned project completion date or contract milestone.

M. FRAGNET: A partial or fragmentary network that breaks down activities into smaller activities for greater detail.

N. WORK AREA: An area of construction, a separate facility, or a similar significant construction element.

O. CONTRACT MILESTONE: An activity or event that must be completed by a specific date and to which liquidated damages may apply. Contract start and completion dates are considered Contract Milestones.

P. NETWORK DIAGRAM: A graphic diagram of a network schedule, showing activities and activity relationships.

Q. SCHEDULE OF VALUES: A realistic statement furnished by Contractor allocating portions of the Contract Sum to various portions of the Work and used as the basis for reviewing Contractor's Applications for Payment. The Schedule of Values should be produced from P6 and match the Cost Loading in the Schedule.

R. COST-LOADING: The allocation of the Schedule of Values for the completion of an activity as scheduled. The sum of costs for all activities must equal the total contract amount, unless otherwise approved by the City.

S. RESOURCE LOADING: The allocation of manpower necessary for the completion of an activity as scheduled.

T. WORK BREAKDOWN STRUCTURE (WBS): The WBS is a hierarchical structure of the Work to be performed under the contract.

U. CALENDAR DAY: All days in a calendar year including weekends and holidays. Contract duration is measured in calendar days against contract milestones.

V. PACING: An intentional slowing of work activities during a delay, or alleged delay, to project completion.

W. INSTALLED MAJOR EQUIPMENT: All major equipment installed as part of the final constructed facility. See PAYMENT PROCEDURES Section 01 29 00 for definition of Major Equipment.

X. CONSTRUCTION EQUIPMENT: All equipment utilized by the contractor to construct the facility but is not a part of the final constructed facility.

Y. BLACKOUT CALENDAR: An activity calendar that applies the non-work option in Primavera P6 Activity Calendars to create non-working days, weeks, and/or months when work is restricted from occurring. The City requires the use of blackout calendars for restricted activities rather than adjusted logic and durations.

1.03 SCHEDULER QUALIFICATIONS

A. The Contractor shall employ or retain the services of a full-time, onsite Senior Project Scheduler who shall have verifiable experience in construction work sequencing, productivity, and scheduling as well as preparing and maintaining detailed construction schedules using the most current version of Oracle Primavera P6 software. Within seven (7) calendar days after Notice to Proceed, the Contractor shall submit to the City Representative for review and acceptance, in accordance with Section 01 33 00 SUBMITTAL PROCEDURES and Section 01 33 22 WEB BASED CONSTRUCTION DOCUMENT MANAGEMENT, the Project Scheduler's resume, including personal references from at least two (2) owner- representatives familiar with the Project Scheduler's work on previous water or wastewater treatment projects. The City reserves the right to reject the proposed scheduler based on the lack of qualifications as defined in this section. The Contactor's scheduler shall attend all schedule related meetings, including progress meetings, job walks when necessary to verify schedule progress, schedule review meetings and special meetings pertaining to scheduling of the Work. This person, along with the Contractor's management team, is expected to work closely with the City Representative to deliver acceptable products outlined in this section and comply with the Reports requirements of this section.

B. If the Senior Construction Scheduler leaves the employment or retainage of the Contractor, the Contractor will be required to notify the City Representative in advance of the intended departure and fulfill the requirements of this subsection within thirty (30) calendar days of the departure of the Contractor's Senior Construction Scheduler. The City reserves the right to disapprove any candidate proposed for the Project. The City reserves the right to remove any member of the Contractor scheduling staff that is, in the City's opinion, not performing scheduling work in accordance with the scheduling requirements.

1.04 SCHEDULING CONFERENCES

A. PRE-CONSTRUCTION SCHEDULING CONFERENCE:

1. Within ten (10) calendar days after Notice to Proceed, the City Representative shall schedule and conduct a pre-construction scheduling meeting per Section 6.1-1 of the 2021 Whitebook, and the Contractor shall submit to the City Representative a written copy of its proposed WBS, and a cost loaded construction schedule at this meeting. The City shall review the WBS and schedule within ten (10) calendar days after submission by the Contractor. The Contractor shall make all modifications to the proposed WBS that are requested by the City. The WBS shall

be correlated with the Contractor's Schedule of Values and the cost loaded schedule.

1.05 FLOAT

A. Pursuant to the float sharing requirements of the Contract, use of float suppression techniques such as preferential sequencing, special lead/lag logic restraints, hard constraints, Start on or After and Start on or Before constraints, adding and/or removing working or non-working days from an accepted activity calendar, extended activity durations, or imposed dates, shall be cause for rejection of the Baseline Construction Schedule and any revisions or updates. The use of float time disclosed or implied using alternative float suppression techniques shall be shared as directed by the City.

B. Float time is not for the exclusive use or benefit of either the City or Contractor, but is a jointly owned, expiring Project resource available to both parties as needed to meet schedule milestones and the contract completion date. Contractor's use of float shall be pre-approved by the City prior to use.

C. No time extensions will be granted nor delay damages paid unless a City-caused delay occurs which impacts the Project's critical path and the Contractor has complied with all related contract requirements. Other delays will be evaluated by the Contractor for concurrency to issues and be included as part of the Contractor's analysis.

D. Submittal of an early completion schedule shall not provide a basis for the Contractor to claim an excusable delay for any time earlier than the contract completion date.

1.06 LOGIC AND LEVEL OF DETAIL

A. The project schedule shall include activities of sufficient detail to accurately represent and clearly convey the Contractor's feasible plan for the timely completion of the full scope of the work. Activities performed on site shall have maximum durations of 20 days and a value of $50,000. The Contractor shall be responsible for developing the logic of the Baseline Schedule and for updating the logic each month to accurately reflect the progress of the work to date and the Contractor's current plan for the timely completion of the work. The schedule logic for each activity shall be constructed by determining which activities must be completed before any subsequent activity can start, which activities can occur simultaneously with the predecessor activity, which activities cannot start until another activity is complete, and the impact of all resource limitations on activity sequencing, activity durations, and activity dates. Every activity, except the project start and finish milestones, shall have a minimum of one predecessor and one successor. All paths through the project schedule shall proceed in the direction representing the progression of time; start to finish logic is disallowed. Activity lags shall not have a negative value. The use of lags shall be kept to a minimum

and shall be subject to acceptance by the City. Redundant ties to preceding activities in a sequential series of activities will not be permitted.

B. The activity descriptions shall be specific and discrete such that it cannot be confused with any other activity description. For example, "Form Concrete Wall" is too broad; there must be a description of the unique location of the wall. Similarly, activities that are discrete should not be combined.

C. Finish to start logical relationships shall be predominantly used for schedule activities. The use of logical relationships with negative lags will not be allowed in the baseline schedule, in proposed revised schedules, or in the monthly updates.

D. Milestones. Separately identify each Project milestone, conforming to the scheduling requirements as set forth in the Contract Documents, and assign a "finish no later than" constraint date. For Completion Deadlines, the activity description shall reference the appropriate Contract clause.

E. No unspecified milestone constraints, other constraints, Float suppression techniques, or use of Project activity durations, logic ties, and/or sequences deemed unreasonable by the City, will be used in the Project Schedule.

1.07 SCHEDULE SOFTWARE SETTINGS AND RESTRICTIONS

A. Contractor shall use the most current version of Oracle Primavera P6 software to produce the contract schedules and reports as specified herein. In accordance with Section 01 33 00 SUBMITTAL PROCEDURES, the Contractor shall submit all schedules and associated documentation directly into the City-furnished, web-based, document control system in accordance with Section 01 33 22 WEB BASED CONSTRUCTION DOCUMENT MANAGEMENT. The schedule files shall be submitted in Primavera's Proprietary Exchange (XER) format until such time as Primavera recommends transferring to their Extensible Markup Language (XML) format. Reports shall be in Adobe Portable Document Format (PDF).

B. ACTIVITY CONSTRAINTS:

1. Date/time constraint(s), other than those required by the contract, will not be allowed unless accepted by the City. Identify any constraints proposed and provide an explanation of the purpose of the constraint in the Narrative Report. Any finish constraints for City required milestones must use a 'Finish on or Before' type designation and have logic ties. Start on or After and Start on or Before constraints are discouraged. All Start on or After and Start on or Before constraints are subject to approval by the City representative. No hard constraints, which include Start on, Finish on, Mandatory Start, and Mandatory Finish, are allowed. The contractor shall not use any manual date entries that override schedule driven dates based on duration and network logic.

C. LAGS:

1. Lags will not be used when the creation of an activity will perform the same function (e.g., concrete cure time), instead an activity representing the gap between the completion of one activity and the start of another will describe the time gap.

D. DEFAULT PROGRESS DATA DISALLOWED:

1. Actual Start and Actual Finish dates on the CPM schedule shall match the dates provided from Contractor Quality Control Production Reports, Contractor daily reports and other contemporaneous project documentation.

E. SOFTWARE SETTINGS:

1. Schedule calculations and Out-of-Sequence progress (if applicable) shall be handled through Retained Logic, not Progress Override. All activity durations and float values will be shown in days. Activity progress will be shown using Remaining Duration. Default activity type set to "Task Dependent." User preference settings shall be set to hours with the show unit label box checked and zero decimal places. The “Durations Format” shall be set to days with the show durations label box checked, and zero decimal places.
2. The critical path shall be calculated by selecting the Longest Path as opposed to Total Float.

F. Activities unless otherwise approved will be “physical percent complete” type. Duration percent complete will only be used on City-related activities such as submittal reviews.

G. Duration Type shall be set to Fixed Duration and Units.

H. The "Automatically Level resources when scheduling" box shall not be checked. All schedule submittals, and schedule related data of any kind, shall not be resource leveled and shall be the basis for rejection if submitted with resource leveling.

I. The project critical path shall be displayed using both the ‘Critical’ and ‘Longest Path’ filters in P6.

1.08 COST LOADING

A. The activities contained within the schedules shall be cost loaded, and they shall equal the Contract Total Price with Sub-Totals that match the Schedule of Values within Section 01 29 00 PAYMENT PROCEDURES. Contractor is required to cost load the construction schedule using price per unit. Equipment shall include installed and construction equipment specified as price of equipment that is worth over $100,000. For example, the labor unit would be $ per hour; the material unit would be material cost per unit installed. The non-labor resources shall be used exclusively on activities containing equipment. Equipment shall include installed and construction equipment specified as price of equipment. The resource coding and name shall distinguish

between installed and construction equipment. An example of price per unit cost loading is shown below:

1. One (1) labor unit = $1 of labor
2. Material unit of $1 for 1 unit
3. Equipment unit of $1 for 1 unit

B. Procured items, including installed equipment, should be budgeted as part of separate procurement activities such that the installation activity is not indicated as started when the procured material is onsite, and installation has not begun. Refer to the Section 01 29 00 PAYMENT PROCEDURES for more details. O&M and Training activities shall be their own cost-loaded schedule activities. Project record documentation (as-builts) shall also be a separate cost-loaded schedule activity.

C. Overhead and profit shall be prorated evenly on all cost loaded activities. Alternatively, overhead may be treated as a Level of Effort activity or activities. The Contractor shall not unbalance the activity cost loading, nor shall the Contractor utilize Resource Leveling as a technique for extending activity durations. The approved Schedule of Values, as generated from the Cost Loading becomes the basis for the Payment Application.

D. Every construction activity that contains labor shall be cost loaded.

E. Fabricate and Deliver activities shall be cost loaded to cover the material or equipment costs. The Fabrication activities shall utilize a material or equipment resource.

F. Commissioning activities shall be cost loaded using a labor resource.

G. The cost loading and progress payments for long lead procurement items will be discussed at the pre-construction scheduling conference.

H. Once the Schedule of Values is accepted with the Baseline Construction Schedule, requests for changes to the Baseline Schedule of Values will not be approved unless approved in writing by the City Representative.

I. The Contractor shall submit with the Baseline Schedule the detailed budget documents reflecting the costs used as the basis of the cost loading contained therein.

J. In Oracle Primavera P6, for actual monthly costs to store correctly, the Contractor must setup the financial period to equal the first and last date of the calendar month, regardless of the actual monthly cutoff date. Financial periods cannot bridge 2 months and must equal the full month. Financial dates table will be provided at the Preliminary Schedule meeting.

K. Work Restrictions in Section 01 31 13 PROJECT COORDINATION indicating activities that cannot be performed during specific periods of time due to operational or other City requirements shall be accommodated in the Baseline and Progress Schedules using blackout calendars. These Blackout Calendars must be developed incorporating the specific durations when work cannot be performed, according to the terms of each work restriction, and applied to the applicable activities. These Blackout Calendars will prevent work from extending into these restricted periods by shifting it until after the completion of the restriction.

1.09 RESOURCE LOADING

A. Schedules shall include resource loading, also known as manpower loading, showing at a minimum, the composite crew, the classification (e.g., foreman, journeyman, etc.) of the individual craftsman comprising the crew, materials or equipment associated with each construction and commissioning activity shown on the schedule, plus any other information required by the City. Manpower shall be expressed as manhours.

B. Manpower resources shall be listed in the Resource Library of the Primavera Software and the Contractor shall assign manpower resource loading by trade for each work activity of the schedule.

C. The Contractor warrants that it will allocate resources and costs based upon Early Date curves and Late Date curves as well as all area between these two curves. The Contractor also warrants that the cost of performing the work, based upon both curves, is included within its bid price.

D. The Contractor shall submit with the Baseline Schedule the detailed budget documents reflecting labor hours used as the basis of the resource loading contained therein. The budget documents used to resource load the Baseline Construction Schedule shall be based upon the escrowed bid documents and reconcile thereto.

E. Work performed by the prime contractor and all subcontractors with a contract value greater than or equal to two (2) percent of the Prime Contract Value shall use the following resources:
   1. Labor
   2. Materials
   3. Installed Major Equipment (refer to Section 1.02 Definitions)
   4. Construction Equipment (refer to Section 1.02 Definitions)
   5. Manhours

F. The Prime Contractor, and each of the subcontractors with a contract value greater than or equal to two (2) percent of the Prime Contract Value, shall create separate Labor, Material and Nonlabor (Equipment) resources for the Prime Contractor and

each subcontractor. The resources shall be titled with the name and/or trade of the Prime Contractor and subcontractors and shall match the responsibility activity code assigned to each activity.

1.10 ACTIVITY CALENDARS

A. All calendars shall be given specific project names and defined clearly in Oracle Primavera P6. For example, "NCPWF Standard 5-day with Holidays," "NCPWF 6-day with Holidays," Calendars for different trades if used, should be specified. All calendars and activity coding within the schedule shall be "Global" rather than "Project" level and shall have a unique prefix of the City contract number.

B. The Contractor shall utilize Blackout Calendars and apply the calendars to activities that may be impacted by the work restrictions stated in Section 01 31 13 PROJECT COORDINATION.

PART 2 PRODUCTS

2.01 BASELINE CONSTRUCTION SCHEDULE

A. The Baseline Construction Schedule shall be constructed to show sequence and duration of the activities the Contractor proposes to carry out the Work. The schedule shall be resource (manpower) and cost loaded and should indicate any restrictions on the availability of work areas. The Contractor shall utilize the Baseline Construction Schedule in planning, scheduling, coordinating, and performing the work under the Contract (including all activities of Subcontractors, equipment vendors, and Suppliers). The Baseline Construction Schedule is the basis of the Schedule of Values and look-ahead schedules. The plan shall demonstrate all work including Mechanical and Electrical work and Commissioning phases.

B. Within fourteen (14) calendar days of receiving the City's comments on the schedule delivered in the Pre-Construction Scheduling Conference, the Contractor shall submit the Baseline Construction Schedule to the City, including a written narrative to further explain the plan as set forth in its CPM logic network and schedule. The Contractor shall schedule a workshop prior to submittal of the Baseline Construction Schedule to present the schedule plan. Within seven (7) calendar days from Baseline Construction Schedule submittal, the Contractor shall conduct a Baseline Construction Schedule presentation describing the schedule in detail and the Contractor's means & methods for construction. The City Representative shall accept or reject, in writing, the Contractor's Baseline Construction Schedule within seven (7) calendar days after receipt of all required information. If rejected, the Contractor shall make necessary modification to the Baseline Construction Schedule and resubmit to the City within seven (7) calendar days. The City Representative shall accept or reject, in writing, the revised Baseline Construction Schedule within seven (7) calendar days of resubmittal.

Once accepted, the Baseline Construction Schedule shall be used for monitoring and evaluating Contract performance, including, but not limited to progress, progress payments, changes, and delays.

C. The Baseline Construction Schedule will be the Performance Measurement Baseline (PMB) for the project. This requires that the PMB will be maintained with any structural schedule changes in the Current schedule. This includes expansion and contraction in WBS and/or activities, detailing out summary cost items, and anything else that makes the PMB non-measurable.

D. There shall be at least one continuous Critical Path in the Baseline Schedule, using the longest path definition that starts at the earliest occurring schedule activity in the network (i.e., NTP1) and ends at the latest occurring schedule activity in the network. No more than 20 percent of the activities may be critical or near critical. The Near Critical path shall be defined as within 15 working days of the critical path. If 20% of the activities become critical, present a plan to reduce the number of near-Critical Path activities to the client.

E. The Baseline Construction Schedule shall demonstrate the final level of detail for each activity and shall contain the required relationships completely identified and the durations of each activity correctly depicted. The Baseline Construction Schedule shall be developed as follows:
   1. The Baseline Construction Schedule shall contain no contract changes or delays which may have been incurred during the interim schedule development period. These changes will be entered at the first update after the baseline schedule has been accepted and a change to the contract time or duration was made via an approved change order.
   2. The Baseline Construction Schedule submitted for review and acceptance by the City shall contain no status and the data date shall be the contract notice to proceed date.
   3. The Baseline Construction Schedule shall clearly indicate the longest critical path of activities from notice to proceed to the contract completion date or contract milestone.
   4. The Baseline Construction Schedule will contain all cost information assigned to each of the specific activities at the final level of detail. Every construction activity that contains labor, construction equipment or permanent equipment shall be cost and resource loaded to permit initial generation of a cash flow curve and resource curve.

F. The Baseline Schedule shall include summary activities and milestones for startup as defined in Part 1.5 of Section 01 91 14 TESTING, INTEGRATION AND STARTUP. The detailed Startup Schedule will be submitted and updated separately as described in Section 01 91 14 TESTING, INTEGRATION AND STARTUP, with links to the

accepted Baseline Schedule summary activities and milestones for startup. 100 working days prior to the start of Pre-Commissioning, the Contractor shall submit detailed Startup Schedule which will link to the accepted Baseline Schedule summary activities and milestones for startup.

G. The Comments made by the City Representative on the Baseline Construction Schedule, during review, will not relieve the Contractor from compliance with requirements of the Contract Documents. To the extent that there are any conflicts between the accepted schedule and the requirements of the Contract Documents, the Contract Documents shall govern. The Baseline Schedule shall show the sequence and interdependence of activities required for complete performance of the Work, beginning with the date of the Contractor's Notice to Proceed date and concluding with the Contract Completion.

H. Please refer to Section 01 33 13 PROJECT COORDINATION for specific requirements regarding Facility Operations. Maintenance of Plant Operations (MOPO) Requests must be submitted prior to starting work in any area, and additional specific MOPO Requests must be submitted for each shutdown and cutover. MOPO Requests shall be submitted a minimum of 10 working days prior to the need date. Activities for the MOPO Request Submittal, City Review Period, and MOPO Request Approval shall be included in the baseline schedule.

I. The Baseline Construction Schedule shall reflect the Contractor's true plans for progressing and performing the work. The Contractor shall be responsible for the means, methods, and duration and certifies that the schedule duration and contract period is achievable and Contractor's estimate/bid, and/or budgets, are based upon sequences shown in the schedule.

J. The Baseline Schedule shall provide the Contractor and the City with a tool to monitor and follow the progress of all phases of the Work. The Baseline Schedule submitted to the City shall comply with all limits imposed by the Scope of Work, with all contractually specified intermediate milestone and completion dates, and with all constraints, restraints or sequences included in the Contract. The Contractor shall obtain subcontractor written concurrence with its Baseline Construction Schedule for all subcontracts with a contract value of 2 percent or greater of the prime contract value.

K. The Baseline Construction Schedule shall incorporate and include:
   1. Appropriate administrative activities and contract specified review periods (including the City and third parties) for all and phases and components of work.
   2. Required cost, resource and activity codes.
   3. Project milestones dates and overall construction activities and project completion dates.

4. Project budget, schedule of values and the cost basis for progress payments.
5. Commissioning activities.
6. Punch list and final completion activities.

L. Failure to include in the schedule any element of Work required for performance of Contract shall not excuse Contractor from completing all Work required within applicable time constraints, notwithstanding the City's acceptance of Contractor's Baseline Construction Schedule.

M. Nothing in these requirements shall be deemed to negate or diminish Contractor's authority and responsibility to plan and schedule Work as required, subject to requirements of Contract Documents.

N. No construction activity shall be more than 20 working days duration. Exceptions may be approved by the City.

O. SUBMITTAL REVIEW TIME:

1. Include in the schedule the review times indicated in Section 01 33 00 SUBMITTAL PROCEDURES. Coordinate submittal review times in contractor's baseline construction schedule with submittal schedule. The schedule shall include a schedule activity for all submittals required by these specifications. Rejected submissions will require the contractor to add activities that start a second submission and review process.

2.02 SCHEDULE NAMING REQUIREMENTS

A. To assist the City in consolidating the schedules from all the projects, a standard naming convention has been adopted. The Project name in P6 and the schedule file name should be the same as the following example:

<u>CASSF Baseline 01 Jan23 DD011522</u>

Where:

CASSF = the code for the project, in this case Central Area Small-Scale Facility

Baseline = the type of schedule submittal, which can also be Update, Recovery or Time Impact Analysis

01 = the submittal number or version

Jan23 = the month and year of the schedule submittal

DD = the Data Date, in this example Jan 15, 2023

The exported P6 data (XER) file shall use the same name as the Schedule ID

2.03 ACTIVITY ID

A. Every Activity ID in the baseline and updated schedules shall be preceded by a 5-letter prefix code followed by a dash. All suffix coding to the right of the dash is at the discretion of the Contractor. The prefix code for the CASSF project is 'CASSF'.

B. If for any reason an Activity ID is deleted or removed from the schedule, it may not be reused for another activity. Similarly, once the baseline construction schedule is accepted, activity descriptions may not be changed without the permission of the City Representative.

2.04 SCHEDULE SUBMITTALS

A. In accordance with Section 01 33 00 SUBMITTAL PROCEDURES and Section 01 33 22 WEB BASED CONSTRUCTION DOCUMENT MANAGEMENT, submit all required schedule submittals in the following format:
   1. One (1) electronic copy of the Oracle Primavera P6 XER file including all project layouts.
   2. One (1) PDF copy of all reports, bar-charts, time-scaled diagrams, histograms, s-curves and narrative.
   3. One (1) hardcopy tabular reports per Section 6-1.1.2 of the 2021 Whitebook.

B. VARIANCE REPORT:
   1. With each updated schedule submission, provide a computer-generated Log Report listing all changes made between the previous schedule and current updated schedule. Identify the name of the previous schedule and name of the current schedule being compared showing all changes to the Schedule. This report will as a minimum show changes for: Added & Deleted Activities, Original Durations, Calendars, Descriptions, Constraints (added, deleted, or changed), Added/Deleted Resources, Costs, Added/Deleted Relationships, Changed Relationship Lags, a Critical Path Analysis, Float Analysis, Open Ended Activity Analysis. A narrative shall be included in the variance report stating the reason for the changes listed above.

C. CPM REPORTS: Concurrent with the CPM schedule, submit in PDF format the reports listed below. The specific format of the required reports will be discussed at the Preconstruction Scheduling Conference.
   1. Critical Path Gantt Chart as further described in Section 2.02.A
   2. Critical and Near Critical Path Gantt Chart as further described in Section 2.02.A
   3. Activity ID Report: List of all activities sorted by activity number.
   4. Activity Schedule Bar-chart: Sorted by phase, area, start and finish.

5. Logic Report: List of preceding and succeeding activities for all activities, sorted by phase, area, start and finish.
6. Total Float Report: List of all activities sorted by phase in descending order of total float, then descending finish.
7. Schedule of Values Report generated from the Oracle Primavera P6 schedule grouped by the Cost ID activity code and filtered by "budgeted total cost is not equal to $0." Sort by Activity ID with the following columns:
   a. Activity ID
   b. Activity Name
   c. Remaining Duration
   d. Start
   e. Finish
   f. Cost Percent Complete
   g. Physical Percent Complete
   h. Previous Physical Percent Complete
   i. Budgeted Total Cost
   j. Actual Total Cost
   k. Actual This Period Total Cost
   l. Previous Applications Total Cost
   m. Remaining Total Cost
   n. At Completion Total Cost
8. PROJECT CASH FLOW S-CURVE: Show the monthly budgeted costs, actual costs and estimate at completion. Include cash curves for early and late start and finish dates.
9. MANPOWER HISTOGRAMS: Showing project overall labor hours per month and trade labor hours per month (carpenters, masons, electricians, laborers, foremen, etc.)
10. MATERIAL AND EQUIPMENT STATUS REPORT: Showing the status of materials and equipment stored on-site and materials and equipment stored in bonded warehouse(s).

2.05 BASELINE NARRATIVE

A. The Contractor shall provide a written narrative accompanying the electronic version of the Contractor's Baseline Schedule submission. This narrative shall explain the Contractor's approach for meeting all milestones and project completion dates. It shall also include a clear description of the critical path activities from beginning to end and describe anticipated crew sizes, production rate and anticipated problems of major activities along the critical path.

B. In the written narrative, the contractor shall include the basis and assumptions used to develop the Contractor's Baseline Schedule. The contractor shall include crew sizes, equipment requirements, and anticipated delivery dates; restraints; critical path activities; activities requiring overtime or additional shifts; activities that contain time contingencies for impacts to be expected from normal rainfall; holidays and other non-work days; potential problem areas; permits; coordination required with the City and third party agencies; and long lead delivery items requiring more than 60 calendar days from order to delivery. The narrative shall also include a description of winterization activities necessary for work to continue through normally inclement weather periods.

2.06 SCHEDULE UPDATE PROCESS AND PAYMENTS

A. Contractor to monthly update the approved Baseline Schedule to reflect the current status of the Project. The update shall include all information available and status of the Project as of the cut-off date established in the Preliminary Schedule Meeting. All Monthly Progress Schedules shall incorporate all schedule Revisions and changes previously approved by the City.

B. Each Monthly Progress Schedule shall reflect all as-built activities performed as of the effective data date of the update schedule. The Monthly Progress Schedule shall include the period from the last update to the effective data date and for the remainder of the Project. The current period's activities shall be reported as they actually took place. In the updated schedule, Contractor shall indicate the actual dates that activities were started, completed, or split. Ongoing activities shall have an indication of the percent complete based on the amount of actual work performed, and the estimated remaining duration to complete such activities.

C. Contractor shall certify that the progress shown on the schedule update accurately represents Work completed through the cutoff date of the Submittal.

D. If Work was performed out of sequence, implement changes to the schedule so that it correctly reflects the actual sequence of work. In the case of repairing logic for Work performed out of sequence, the City may consider the use of negative lags. Any such schedule corrections for out of sequence work shall be considered a Revision, and Contractor shall obtain written approval from the City prior to implementing those revisions to the Monthly Progress Schedule or any other type of schedule.

E. The physical percentage completion status (and remaining duration) of activities shall be statused in the schedule Updates and the Monthly Progress Schedule independently from the status of the dollar amount assigned to the activity for cost (price) and progress payment purposes. For example, the status of an activity can be 50% complete (based on time of performance) and may have a remaining duration of 5 days of the original 10-day duration, but the cost assigned to that activity may have

a different completion status, and the earned dollars could be more or less than 50% of the at-completion dollars assigned to that activity. Contractor shall set up the scheduling software to calculate the physical completion status of each activity related to time separately from the statusing of the value of dollars earned for progress payment purposes.

F. The earned-to-date dollar amount must reflect the value of the work completed (which may not be directly proportional to the activity remaining duration or physical completion status), and consideration must be given to: 1) materials stored at the site or off site, but not incorporated into the work when payment prerequisites are met by Contractor, 2) reductions for non-compliant work, 3) reductions for failure to provide material testing or required certifications, 4) reductions for other reasons described by the Contract Documents, 5) when the value of the work remaining is naturally disproportionate to the performance time remaining. When the physical percentage complete of an activity is disproportionate to the earned-to-date dollar amount, the reasons for the variance shall be described in a Log field as part of the Monthly Progress Schedule data, and those Log field notations shall be displayed as a column in the APPLICATION FOR PAYMENT DETAIL.

G. In addition to what is required for a schedule Update of work progress, the submission shall include a separate tabular report of all schedule activities that are cost loaded, and shall include the at-completion Total Cost, the proposed earned-this-period Cost amount, and the proposed earned-to-date Cost. The format and group subtotaling of the cost and payment accounting tabular report shall be submitted for review and acceptance by the City prior to the first Monthly Progress Schedule submission, and the City can request and Contractor shall implement revisions to the formatting and data displayed in the tabular report at any time thereafter to better serve the City's cost accounting system. The tabular report shall serve as the line item detail of the earned-to-date dollars assigned to each activity through the schedule's data date, will be referred to as the APPLICATION FOR PAYMENT DETAIL document, and once approved by the City, will be an attachment to the Contractor SUMMARY OF TASKS submitted by Contractor as part of the monthly INVOICE AND INVOICE CERTIFICATE package.

H. Two days prior to the Monthly Progress Schedule data date, submit draft Monthly Progress Schedule for review by the City. Review will be done during a meeting to go over the claimed amounts. During the meeting the City Representative will respond to Contractor's estimated earned-to-date dollar amounts, and any variances between Contractor's proposed earned-to-date dollars and the City's estimate will be discussed and resolved. A marked up copy of the tabular report of the resolution of any variances will be copied for each party. Those changes to the draft Monthly Progress Schedule earned-to-date dollars will be made to the schedule before the Monthly Progress Schedule is formally submitted. If follow-up is required to further a discussion or to present proof in order to resolve the earned-to-date dollar amount for an activity, it

shall occur within two working days after the Meeting, and a resolution shall be reached before formal submission of the Monthly Progress Schedule. If there is a disagreement between City's and Contractor's estimated earned-to-date dollar amounts, Contractor shall use the City's earned-to-date figure.

I. If at any time, Contractor or the City discovers an at-completion dollar amount (budget) assigned to an activity that is unreasonable or incorrect, either party can request that an adjustment be made. Such proposed adjustment shall be presented at the next Weekly Progress Meeting and discussed and treated like any other proposed schedule revision. Adjustments to the at-completion dollar amount for any activity will naturally require an equal adjustment to another activity such that the total Contract value does not change. Any proposed Revision to the at-completion dollar amount for any activity must be accepted by the City in writing prior to the change being made to the Monthly Progress Schedule. Contractor will maintain and make available to the City a record of all approved revisions to at-completion dollar amounts that displays each approved revision, and the adjustments to all activities affected by a revision.

J. Contractor's monthly payment applications shall not be accepted and processed for payment by the City Representative without Baseline Schedule progress updates submitted in the time and manner required by this specification which accurately reflect the allowable costs due under the Contract Documents and are accepted by the City. Should the Baseline Schedule progress updates not be accepted due to the Contractor's failure to address all City provided comments, payment withholds and deducts will be applied as specified in paragraph 3.04 of this section.

K. Please see Section 01 29 00 PAYMENT PROCEDURES for the Schedule of Values approval process and coordination with invoice payment.

L. The Schedule Update Submittal shall include:

1. A detailed Gantt chart showing all activities organized by WBS. The activity columns shall include Activity ID, Activity Name, Original Duration, Remaining Duration, Duration Percent Complete, Physical Percent Complete, Start, Finish, and Total Float. The critical path shall be clearly shown.
2. A Critical Path Gantt chart showing Longest Path grouped by WBS to level 1 only. The activity columns shall include Activity ID, Activity Name, Remaining Duration, Start, Finish, and Total Float. The critical path and relationship lines (logic) shall be clearly shown and based upon the critical and longest path.
3. A Critical and Near Critical Path Gantt using the "calculate multiple float paths" option in P6 with the "display multiple float paths ending with activity" set to each of the contract milestones. Set the number of float paths to thirty (30). Group the report by "Float Path" and filter for float value 15 days from the float value showing on each contract milestone. The activity columns on the tabular data portion of the schedule shall include Activity ID, Activity Name, Remaining Duration, Start,

Finish, and Total Float. The critical path and relationship lines (logic) shall be clearly shown.

4. A Schedule Variance Report shall be submitted comparing the current schedule submittal with the previously accepted schedule. Display the baseline project bars and milestones in the Gantt Chart. Include the following categories:
   a. Activity ID
   b. Activity Name
   c. Original Duration
   d. BL Project Duration
   e. Variance – BL Project Duration
   f. Start
   g. Finish
   h. BL Project Start
   i. BL Project Finish
   j. Variance – BL Project Finish Date
5. Schedule of Values Report generated from the Oracle Primavera P6 schedule grouped by the Cost ID activity code and filtered by "budgeted total cost is not equal to $0." Sort by Activity ID with the following columns:
   a. Activity ID
   b. Activity Name
   c. Remaining Duration
   d. Start
   e. Finish
   f. Cost Percent Complete
   g. Physical Percent Complete
   h. Previous Physical Percent Complete
   i. Budgeted Total Cost
   j. Actual Total Cost
   k. Actual This Period Total Cost
   l. Previous Applications Total Cost
   m. Remaining Total Cost
   n. At Completion Total Cost
6. A Cashflow curve plotting actual invoicing against Baseline forecast cashflow and the update forecast to project completion. The cashflow shall include Show the monthly budgeted costs, actual costs and estimate at completion. Include cash curves for early and late start and finish dates.

7. A manpower histogram plotting actual labor hours against Baseline forecast labor hours over the entire project.
8. Material and Equipment Histograms: Showing the status of materials and equipment stored on-site and materials and equipment stored in bonded warehouse(s).
9. Construction Equipment Histograms: Show project overall equipment count per month by major equipment category count per month (cranes, excavators, etc.).

M. All changes to Schedule Updates must be accepted by the City Representative. If the Contractor desires to make a change to the current accepted Progress Update Schedule, the Contractor shall request permission from the City in writing, stating the reasons for the change as well as the specifics, such as revisions to activities, logic, durations, calendars, etc. Pending changes will be discussed at the Monthly Schedule Review (two days prior to last Friday) where the City may authorize their inclusion in the schedule without any determination of merit or responsibility.

N. Out of sequence logic must be corrected before the Progress Update Schedule is submitted.

O. Pending Changes shall have a City assigned Potential Change (PC) number. The Contractor shall incorporate PC activities into the schedule as Level of Effort (LOE) activities, with a zero-dollar value cost, in the update period in which the Contractor knew, or should have known of the change. The LOE shall be linked to the impacted base contract schedule activities. The change activity shall not be cost loaded until an agreement is reached between the Contractor and City as to cost. Should the PC impact the critical path, the Contractor shall submit a Time Impact Analysis (TIA) per the TIA provisions of these specifications. Upon acceptance of a TIA by the City Representative, the Contractor shall incorporate the detailed TIA schedule activities into the next Schedule Update retaining the original LOE activity. All Potential Change Activities shall be assigned a WBS and coding structure to distinguish said activities from base contract schedule activities. Upon PCs being incorporated into a Contract Change Order (CCO), the Contractor shall assign a WBS and Activity Code for each CCO, with its subset of PC numbers, with the sum cost loading of said PC activities equal to the value of the CCO. The sum of the base contract activities shall total the original contract value. The sum of the change activities shall total CCOs issued to date, plus remaining PCs pending CCO. In the case of deductive change, the base contract activity shall be broken into two activities with the same logic ties consisting of the original activity with the remaining base contract amount and second activity with the amount to be deducted, the sum of the two totaling the originally scheduled value. Add an offsetting deduct (negative cost) as a PC change activity. The deduct amount activity on the base contract section shall have the successor logic removed, with a “deduct” note in parenthesis added to the end of the activity description. The deduct activity shall remain open until the actual deduct activity in the change section is status

as complete upon the CCO being issued. Upon the CCO being issued, both activities shall be status with the CCO issue date.

P. Failure to include in the schedule any element of Work required for performance of Contract shall not excuse Contractor from completing all Work required within applicable time constraints, notwithstanding the City's acceptance of Contractor's Construction Schedule.

Q. Contractor shall address City review comments and resubmit within 7 Calendar Days from receipt of review comments. Should the Contractor fail to timely incorporate the City schedule review comments prior to the due date for the next month's update, the Contractor shall proceed with the update and the outstanding schedule review comments from the prior month will be included in the current schedule update's review comments. The Contractor is responsible for including the City schedule review comments into all affected schedules.

R. Schedule updates forecasting contract milestones 30 or more days late are subject to rejection.

2.07 NARRATIVE PROGRESS REPORTS

A. A Cost Activity Report shall be prepared and submitted with each progress payment. The cost information shall be updated by activity and summarized for each month. The sum of all monthly costs shall be equal to the contract amount plus approved change orders.

B. The Narrative Report shall be submitted with the monthly progress update and include:
   1. The Contractor's transmittal letter.
   2. Schedule report indicating each activity on the CPM Schedule that has been:
      a. Completed during this reporting period.
      b. In progress during this reporting period.
   3. Scheduled for the next reporting period.
   4. Analysis, by critical path. (Note: critical path is longest path as described above.)
      a. A listing of the current critical path.
      b. Progress made on critical path activities in current CPM schedule
      c. Explanations for any lack of Work on critical path activities planned to be performed during the last month.
      d. Impact on other activities, milestones, and completion dates.
   5. Current and anticipated delays:
      a. Cause of the delay.

b. Corrective action and schedule adjustments taken or to be taken to correct the delay.
c. Impact of the delay on other activities, milestones, and completion dates.
d. Recommendations for recovery of the delays.

6. Any change in construction sequence, logic changes, relationship changes, or duration changes and the rationale associated with each change for City review and acceptance.
7. Any corrective actions taken by the Contractor to address delays or potential delays
8. Value of materials and equipment properly stored at the site but not yet incorporated in the Work.
9. Identify interface items of work with another contract or with existing facilities or where third-party action or coordination is required.
10. Pending issues and status of other items such as:
    a. Permits.
    b. Contract modifications.
    c. Time extension requests.
    d. Long-lead procurement items.
11. Contract complete date status.
12. Ahead of schedule and number of days.
13. Behind schedule and number of days.
14. Summary of project status including cumulative information to date, variance, and forecast at completion.
15. Other project or scheduling concerns.

2.08 RECOVERY SCHEDULE

A. When a periodic update indicates the project completion, or any intermediate contract milestone, is 1 to 15 days behind the current accepted schedule, the City reserves the right to request a recovery schedule. If the work falls more than 15 days behind the current accepted schedule, the Contractor is required to submit a Recovery Schedule taking steps necessary to improve progress at no additional cost to the City.

B. Recovery schedules may be submitted independently or included in the next Monthly Progress Update. Indicate changes to working hours per shift, labor per shift, shifts per working day, working days per week, or amount of construction equipment, or any combination of foregoing, sufficiently to achieve the contractual milestones in accordance with the current Contract requirements. If the Contractor chooses to include the recovery schedule with the next Monthly Progress Update, the City Representative may reject the Monthly Progress Update or require revisions to be

made to the recovery schedule before the Monthly Progress Schedule is accepted. Recovery Schedules shall be prepared by the Contractor regardless of the underlying cause for the delay and responsibility for the time.

C. The Recovery Schedule shall have the same data date as the submitted Monthly Progress Schedule, and the data prior to the data date shall be the same in both.

D. Concurrent with the submittal of the Monthly Progress Schedule for review by the City, Contractor shall submit the proposed Recovery Schedule. The Submittal shall also include a written, narrative format document detailing proposed changes to the Project Schedule and including reasons for the changes. This narrative document shall include at a minimum, the following:
   1. Detailed description of the changes in the means and methods that Contractor intends to implement to recover from schedule delay; such as additional design staff, additional construction crews, additional equipment, extended working hours, additional shifts per day, or other means;
   2. Detailed description of proposed changes in work activity sequences that will permit previously scheduled sequential work to be performed concurrently, or other scheduling changes, which will result in recovery of the schedule delay;
   3. Identification of changes to specific activity original durations;
   4. Identification of changes to activity relationships and/or schedule logic;
   5. Identification of activities that have been added, deleted, or modified; and/or
   6. Identification of changes to the Project Schedule's Critical Path.

2.09 TIME IMPACT ANALYSIS (TIA)

A. When the Contractor asserts it has been or will be delayed, and as a result is requesting a time extension, the Contractor shall notify the City Representative of a potential delay and prepare and submit a TIA within fourteen (14) calendar days after the impact is known or should have been known.

B. The TIA shall be submitted separately and based upon the current accepted schedule with a data date closest to and prior to the date when the Contractor knew, or should have known, of the impact. The current accepted schedule can be the Initial 180 Day Schedule, Baseline Schedule, or Monthly Schedule Update.

C. If the Contractor is submitting time related costs of any kind and/or is requesting time due to a schedule delay, the submittal of a TIA is required.

D. The Contractor shall submit to the City a written TIA illustrating the influence of each change or delay on any specified intermediate milestone date and the current projected completion date. Each TIA shall include a CPM schedule network (fragnet) indicating all necessary added activities, logic, duration and demonstrating how the

Contractor proposes to incorporate the change or delay into the Schedule and any additional supporting evidence that the City deems necessary.

E. The TIA submittal shall include a PDF fragnet comparing the current accepted schedule against the Contractor's claimed delay, showing the impact on the critical path. The fragnet must show all impacts leading up and including the contract milestones.

F. The TIA shall include a narrative addressing entitlement including a description of the scope of the change as well as addressing compliance with all contract requirements for requesting a time extension. The schedule narrative at a minimum shall address the chronology of events (impact activities), compliance with notice requirements, schedule update used as the basis of analysis (or baseline schedule if applicable), critical path, identification of CPM schedule activities impacted, logic ties between impact activities and CPM schedule activities, fragnet, concurrency, and compensability if applicable.

G. The Contractor shall submit one (1) electronic copy of the Oracle Primavera P6 schedule files in XER format, PDF copies of the fragments, and the narrative. Each TIA should be identified with a discrete ID number and description.

H. Should the Contractor fail to request time and submit a contract compliant TIA per these specifications, the Contractor will have irrevocably waived its contract right to a time extension and time-related costs and will be responsible for all costs associated with mitigating said delay to complete the work within the contract time.

I. It is expressly agreed and understood that the Contractor shall not be entitled to any time or compensation for potential delays, or delays, which:
   1. Can be avoided by re-sequencing work activities;
   2. Applying additional resources;
   3. Do not delay the project completion date or a project milestone; or
   4. Result from any method used to sequester float.

J. Pacing is defined as an intentional slowing of work activities during a delay, or alleged delay, to project completion. Absent contemporaneous notice of intent to pace, including the contractor's rational to pace and the City's concurrence, pacing of work activities will be construed as a concurrent delay for the purposes of assessing time extensions and delay costs."

K. The Contractor shall incorporate City review comments and resubmit the TIA within 7 calendar days of receiving them.

L. Upon acceptance of the TIA by the City Representative, the Contractor shall incorporate the TIA fragnet into the next monthly progress schedule update.

PART 3 WEATHER

3.01 ANTICIPATED WEATHER DAYS

A. TIME ALLOWANCE FOR INCLEMENT WEATHER:

1. Time allowance for inclement weather: "Inclement weather" is a lost workday, caused by inclement weather conditions, and is defined as a day in which the Contractor's workforce cannot work 50 percent or more of the day thereby resulting in a delay to the critical path. The number of inclement weather days will be reflected in a schedule activity titled "Inclement Weather". The Contractor shall allow thirteen (13) working days per year within the Baseline Construction Schedule for inclement weather, the unused portion shall be considered as Float to be used by either party. The inclement weather activity's successor shall be the Substantial Completion milestone. The predecessor activities shall be the last project activities that occur before Substantial Completion. The Contractor shall notify the Resident Project Representative in writing when a lost workday has occurred due to inclement weather in accordance with the Baseline Construction Schedule update requirements. Any delays beyond the thirteen (13) working days per year shall not entitle the Contractor to any additional compensation. The sole remedy of the Contractor shall be to seek a non-compensable extension of time.

3.02 WEATHER CALENDAR AND ACCOUNTING OF DAYS

A. The accounting of weather days shall occur once monthly corresponding to the Monthly Schedule Update. The City granted non-working days affecting the critical path attributable to weather shall be accounted for in the Weekly Statement of Contract Time, as prepared by the City, independent of the weather allowance. City granted weather days shall be added to the schedule monthly as a one workday non-workdays in the calendars with an actual date equal to the non-working day as reflected in the Weekly Statement of Contract Time. A monthly reconciliation will occur between the inclement weather allowance and actual weather impact, as reflected in the Weekly Statement of Contract Time. Should the Contractor meet all contract requirements for demonstrating unavoidable delay, the Contractor shall be granted a time extension for weather impact days, beyond the weather allowance days for the same time period, for activities on the critical path.

B. No contract time adjustment shall be made if actual non-working days attributable to weather affecting the critical path DOES NOT exceed the allowance. Unused weather allowance shall become project float.

3.03 COMPLIANCE AND FAILURE TO SUBMIT TIMELY SCHEDULES

A. Because the City places a high value on the importance and use of project scheduling information as a management tool in achieving the completion of Work as planned,

the City will deduct ten percent (10%) of the monthly Progress Payment, but not more than three percent (3%) of the contract value, for failure by the Contractor to submit accepted Baseline Schedules or the monthly Progress Update Schedules as required by these specifications. These deductions shall apply should the Contractor fail to address within the specified time frame schedule review comments, TIA review comments, recovery schedule requirements, and address any other requirements of these specifications and/or the City. These deductions are cumulative and will be made for each and every month that the Contractor fails to provide the required information. The Progress Update Schedules and narratives shall be accurate, reflect actual events on the project, and meet all requirements of these specifications. If the Contractor does not correct the deficiency by providing an acceptable schedule within the specified time frame from receiving the City's review comments, the deduction will become permanent via a deductive change order.

PART 4 PROJECT RECORD SCHEDULE

4.01 FINAL PROGRESS SCHEDULE

A. The last monthly update of the project schedule shall be the project record (as-built) schedule. The project record schedule shall accurately show the completion of all work required by the contract and shall have a data date equivalent to the day after the actual date of the Contract Completion milestone. All project schedule activities shall be statused at one hundred percent (100%) complete and have actual start and actual finish dates. The project budgeted cost reflected in the project record schedule shall be the contract price, inclusive of all adjustments due to executed change orders. The project record schedule submittal shall meet all monthly update requirements and include an actual cost statement. The City's acceptance of the project record schedule shall be a condition precedent to acceptance of the contract by the City's Board of Directors and to the release of final payment and bonds by the City.

B. This schedule submission shall be accompanied by a certification, signed by an officer of the company and the Contractor's Project Manager and Project Scheduler, stating "To the best of our knowledge, the enclosed final update of the Construction Progress Schedule accurately reflects the actual start and completion dates and logical relationships of all activities contained herein and represents an accurate depiction of the way in which the project was constructed."

END OF SECTION

SECTION 01 33 00
SUBMITTAL PROCEDURES

PART 1 GENERAL

1.01 DEFINITIONS

A. Action Submittal: Written and graphic information submitted by Contractor that requires Engineer's approval.

B. Deferred Submittal: Information submitted by Contractor for portions of design that are to be submitted to permitting agency for approval prior to installation of that portion of the Work, along with Engineer's review documentation that submittal has been found to be in general conformance with Project's design.

C. Informational Submittal: Information submitted by Contractor that requires Engineer's review and determination that submitted information is in accordance with the Conditions of the Contract.

1.02 PROCEDURES

A. Direct submittals as described in Section 01 33 22 WEB BASED CONSTRUCTION DOCUMENT MANAGEMENT unless specified otherwise.
   1. Via Construction Manager.

B. Electronic Submittals: Submittals shall, unless specifically accepted, be made in electronic format.
   1. Each submittal shall be an electronic file in Adobe Acrobat Portable Document Format (PDF). Use the latest version available at time of execution of the Agreement.
   2. Electronic files that contain more than 10 pages in PDF format shall contain internal bookmarking from an index page to major sections of the document.
   3. PDF files shall be set to open "Bookmarks and Page" view. Magnification shall be set to "fit page".
   4. Add general information to each PDF file, including title, subject, author, and keywords.
   5. PDF files shall be set up to print legibly at 8.5-inch by 11-inch, 11-inch by 17-inch, or 22-inch by 34-inch. No other paper sizes will be accepted.
   6. Submit new electronic files for each resubmittal.
   7. Include a copy of the Transmittal of Contractor's Submittal form, located at end of section, with each electronic file.
   8. Owner will reject submittal that is not electronically submitted, unless specifically accepted.
   9. Provide Construction Manager with authorization to reproduce and distribute each file as many times as necessary for Project documentation. Provide file password if security settings are used.

10. Detailed procedures for handling electronic submittals will be discussed at the preconstruction conference and shall be as required by Section 01 33 22 WEB BASED CONSTRUCTION DOCUMENT MANAGEMENT.

C. Transmittal of Submittal:
   1. Contractor shall:
      a. Review each submittal and check for compliance with Contract Documents.
      b. Stamp each submittal with uniform approval stamp before submitting to Construction Manager.
         1) Stamp to include Project name, submittal number, Specification number, Contractor's reviewer name, date of Contractor's approval, and statement certifying submittal has been reviewed, checked, and approved for compliance with Contract Documents.
         2) Construction Manager will not review submittals that do not bear Contractor's approval stamp and will return them without action.
   2. Complete, sign, and transmit with each submittal package, one Transmittal of Contractor's Submittal form in format approved by Construction Manager.
   3. Identify each submittal with the following:
      a. Numbering and Tracking System:
         1) Sequentially number each submittal.
         2) Resubmission of submittal shall have original number with sequential alphabetic suffix.
      b. Specification section and paragraph to which submittal applies.
      c. Project title and Owner's project number.
      d. Date of transmittal.
      e. Names of Contractor, Subcontractor or Supplier, and manufacturer as appropriate.
   4. Identify and describe each deviation or variation from Contract Documents.
   5. All submittals shall be in the English language.

D. Format:
   1. Do not base Shop Drawings on reproductions of Contract Documents.
   2. Package submittal information by individual specification section. Do not combine different specification sections together in submittal package, unless otherwise directed in specification.
   3. Present in a clear and thorough manner and in sufficient detail to show kind, size, arrangement, and function of components, materials, and devices, and compliance with Contract Documents.
   4. Index with labeled tab dividers in orderly manner.
   5. Submit all text in the English language.

E. Timeliness: Schedule and submit in accordance Schedule of Submittals, and requirements of individual specification sections.

F. Processing Time:

1. Time for review shall commence on Construction Manager's receipt of submittal.
2. Construction Manager will act upon Contractor's submittal and transmit response to Contractor not later than 15 working days after receipt, unless prior notice has been given. Within 5 working days of receipt of the Construction Manager's comments, Contractor shall resolve and discuss with the Construction Manager any outstanding issues as a result of the Construction Manager's comments.
3. Allow 15 working days for the review of deferred submittals by the Agency Having Jurisdiction (AHJ) after approval by the Engineer.
4. Contractor shall submit resubmittals or final submittals to Construction Manager within 10 working days of the resolution of the submittal issues.
5. No adjustment of Contract Times or Price will be allowed as a result of delays in progress of Work caused by rejection and subsequent resubmittals.

G. Resubmittals: Clearly identify each correction or change made.

H. Incomplete Submittals:
1. Construction Manager will return entire submittal for Contractor's revision if preliminary review deems it incomplete.
2. When any of the following are missing, submittal will be deemed incomplete:
   a. Contractor's review stamp; completed and signed.
   b. Transmittal of Contractor's Submittal; completed and signed.
   c. Insufficient number of copies.

I. Submittals not required by Contract Documents:
1. Will not be reviewed and will be returned stamped "Not Subject to Review."
2. Construction Manager will keep one copy and return submittal to Contractor.

J. Approved Materials List (AML): See Section 3-8.1 "General" and Section 4-3.6 Preapproved Materials in the 2021 Whitebook and 2021 Greenbook.

K. Working Drawings: Submit Working Drawings listed in Table 3-8.2 of 2021 Whitebook.

1.03 ACTION SUBMITTALS

A. Prepare and submit Action Submittals required by individual specification sections.

B. Shop Drawings:
1. Copies: Copies will be submitted electronically (via PMWeb). If revisions are required, coordination will be completed electronically.
2. Identify and Indicate:

a. Applicable Contract Drawing and Detail number, products, units and assemblies, and system or equipment identification or tag numbers.
b. Equipment and Component Title: Identical to title shown on Drawings.
c. Critical field dimensions and relationships to other critical features of Work. Note dimensions established by field measurement.
d. Project-specific information drawn accurately to scale.

3. Manufacturer's standard schematic drawings and diagrams as follows:
   a. Modify to delete information that is not applicable to the Work.
   b. Supplement standard information to provide information specifically applicable to the Work.
4. Product Data: Provide as specified in individual specifications.
5. Deferred Submittal: See Drawings for list of deferred submittals.
   a. Contractor-design drawings and product data related to permanent construction.
      1) Written and graphic information.
      2) Drawings.
      3) Cut sheets.
      4) Data sheets.
      5) Action item submittals requested in individual specification section.
   b. Prior to installation of indicated structural or nonstructural element, equipment, distribution system, or component or its anchorage, submit required supporting data and drawings for review and acceptance by Engineer. Documentation of review and approval provided on Engineer's comment form, along with completed submittal, shall be filed with permitting agency by Contractor and approved by permitting agency prior to installation.
6. Foreign Manufacturers: When proposed, include names and addresses of at least two companies that maintain technical service representatives close to Project.

C. Samples:
1. Copies: Two, unless otherwise specified in individual specifications.
2. Preparation:
   a. Mount, display, or package Samples in manner specified to facilitate review of quality. Attach label on unexposed side that includes the following:
      1) Manufacturer name.
      2) Model number.
      3) Material.
      4) Sample source.
3. Manufacturer's Color Chart: Units or sections of units showing full range of colors, textures, and patterns available.
4. Full-size Samples:
   a. Size as indicated in individual specification section.

b. Prepared from same materials to be used for the Work.
c. Cured and finished in manner specified.
d. Physically identical with product proposed for use.

D. Action Submittal Dispositions: Engineer will review, comment, stamp, and distribute as noted:
1. Approved:
a. Contractor may incorporate product(s) or implement Work covered by submittal.
b. Distribution: Electronic.
1) One copy of closed submittal furnished to the Construction Manager.
2. Approved as Noted:
a. Contractor may incorporate product(s) or implement Work covered by submittal, in accordance with Engineer's notations.
b. Distribution: Electronic.
3. Partial Approval, Resubmit as Noted:
a. Make corrections or obtain missing portions and resubmit.
b. Except for portions indicated, Contractor may begin to incorporate product(s) or implement Work covered by submittal, in accordance with Engineer's notations.
c. Distribution: Electronic.
4. Revise and Resubmit:
a. Contractor may not incorporate product(s) or implement Work covered by submittal.
b. Distribution: Electronic.

1.04 INFORMATIONAL SUBMITTALS

A. General:
1. Copies: Electronic.
2. Refer to Section 3-8.4 of the 2021 Greenbook and 2021 Whitebook, and individual specification sections for specific submittal requirements.
3. Construction Manager will review each submittal. If submittal meets conditions of the Contract, Construction Manager will forward copy to appropriate parties. If Construction Manager determines submittal does not meet conditions of the Contract and is therefore considered unacceptable, Construction Manager will provide review comments to Contractor, and require that submittal be corrected and resubmitted.

B. Equipment Procured Overseas: Within 60 Calendar Days of Notice to Proceed, submit a list of equipment that will require overseas shipping for project delivery. List shall include the value of shipped items.

C. Certificates:
1. General:

a. Provide notarized statement that includes signature of entity responsible for preparing certification.
b. Signed by officer or other individual authorized to sign documents on behalf of that entity.

2. Welding: In accordance with individual specification sections.
3. Installer: Prepare written statements on manufacturer's letterhead certifying installer complies with requirements as specified in individual specification section.
4. Material Test: Prepared by qualified testing agency, on testing agency's standard form, indicating and interpreting test results of material for compliance with requirements.
5. Certificates of Successful Testing or Inspection: Submit when testing or inspection is required by Laws and Regulations or governing agency or specified in individual specification sections.
6. Manufacturer's Certificate of Compliance: In accordance with Section 01 61 00 COMMON PRODUCT REQUIREMENTS.
7. Manufacturer's Certificate of Proper Installation: In accordance with Section 01 43 33, Manufacturers' Field Services.

D. Closeout Submittals: In accordance with Section 01 77 00 CLOSEOUT PROCEDURES.

E. Contractor-design Data (related to temporary construction):
1. Written and graphic information.
2. List of assumptions.
3. List of performance and design criteria.
4. Summary of loads or load diagram, if applicable.
5. Calculations.
6. List of applicable codes and regulations.
7. Name and version of software.
8. Information requested in individual specification section.

F. Deferred Submittals: See Drawings for list of deferred submittals.
1. Contractor-design data related to permanent construction:
a. List of assumptions.
b. List of performance and design criteria.
c. Summary of loads or load diagram, if applicable.
d. Calculations.
e. List of applicable codes and regulations.
f. Name and version of design software.
g. Factory test results.
h. Informational submittals requested in individual specification section.
2. Prior to installation of indicated structural or nonstructural element, equipment, distribution system, or component or its anchorage, submit calculations and

test results of Contractor-designed components for review by Engineer. Documentation of review and indication of compliance with general design intent and project criteria provided on Engineer's comment form as meets conditions of the Contract, along with completed submittal, shall be filed with permitting agency by Contractor and approved by permitting agency prior to installation.

G. Manufacturer's Instructions: Written or published information that documents manufacturer's recommendations, guidelines, and procedures in accordance with individual specification section.

H. Operation and Maintenance Data: As required in Section 01 78 23 OPERATION AND MAINTENANCE DATA.

I. Payment:
   1. Application for Payment: In accordance with Section 01 29 00 PAYMENT PROCEDURES.
   2. Schedule of Values: In accordance with Section 01 29 00 PAYMENT PROCEDURES
   3. Schedule of Estimated Progress Payments: In accordance with Section 01 29 00 PAYMENT PROCEDURES

J. Quality Control Documentation: As required in Section 01 45 16.13 CONTRACTOR QUALITY CONTROL.

K. Schedules:
   1. Schedule of Submittals: Prepare separately or in combination with Progress Schedule as specified in Section 01 32 00 CONSTRUCTION PROGRESS DOCUMENTATION.
      a. Show for each, at a minimum, the following:
         1) Specification section number.
         2) Identification by numbering and tracking system as specified under Paragraph Transmittal of Submittal.
         3) Estimated date of submission to Construction Manager, including reviewing and processing time.
      b. On a monthly basis, submit updated Schedule of Submittals to Construction Manager if changes have occurred or resubmittals are required.
   2. Progress Schedules: In accordance with Section 01 32 00 CONSTRUCTION PROGRESS DOCUMENTATION.

L. Special Guarantee: Supplier's written guarantee as required in individual specification sections.

M. Statement of Qualification:
   1. Evidence of qualification, certification, or registration as required in Contract Documents to verify qualifications of professional land surveyor, engineer,

materials testing laboratory, specialty Subcontractor, trade, Specialist, consultant, installer, and other professionals. Submittals Required by Laws, Regulations, and Governing Agencies:

a. Promptly submit promptly notifications, reports, certifications, payrolls, and otherwise as may be required, directly to the applicable federal, state, or local governing agency or their representative.
b. Transmit to Construction Manager for Owner's records one copy of correspondence and transmittals (to include enclosures and attachments) between Contractor and governing agency.

N. Submittals Required by Laws, Regulations, and Governing Agencies:
1. Promptly submit promptly notifications, reports, certifications, payrolls, and otherwise as may be required, directly to the applicable federal, state, or local governing agency or their representative.
2. Transmit to Engineer for Owner's records one copy of correspondence and transmittals (to include enclosures and attachments) between Contractor and governing agency.

O. Test, Evaluation, and Inspection Reports:
1. General: Shall contain signature of person responsible for test or report.
2. Factory:
   a. Identification of product and specification section, type of inspection or test with referenced standard or code.
   b. Date of test, Project title and number, and name and signature of authorized person.
   c. Test results.
   d. If test or inspection deems material or equipment not in compliance with Contract Documents, identify corrective action necessary to bring into compliance.
   e. Provide interpretation of test results, when requested by Construction Manager.
   f. Other items as identified in individual specification sections.
3. Field:
   a. As a minimum, include the following:
      1) Project title and number.
      2) Date and time.
      3) Record of temperature and weather conditions.
      4) Identification of product and specification section.
      5) Type and location of test, Sample, or inspection, including referenced standard or code.
      6) Date issued, testing laboratory name, address, and telephone number, and name and signature of laboratory inspector.
      7) If test or inspection deems material or equipment not in compliance with Contract Documents, identify corrective action necessary to bring into compliance.

8) Provide interpretation of test results, when requested by Construction Manager.
9) Other items as identified in individual specification sections.

P. Testing and Startup Data: In accordance with Section 01 91 14TESTING, INTEGRATION, AND STARTUP.

Q. Training Data: In accordance with Section 01 43 33 MANUFACTURERS' FIELD SERVICES.

PART 2 PRODUCTS (NOT USED)

PART 3 EXECUTION (NOT USED)

END OF SECTION

THIS PAGE INTENTIONALLY LEFT BLANK

SECTION 01 33 22
WEB BASED CONSTRUCTION DOCUMENT MANAGEMENT

PART 1 GENERAL

1.01 SUMMARY

A. The Owner, Construction Manager, Engineer, and Contractor shall utilize PMWeb (PMWeb is a registered trademark of PMWeb, Inc.), for submission of all data and documents (unless specified otherwise herein) throughout the duration of the Contract.

1. PMWeb is a web-based electronic media site.
2. PMWeb is paid for by the Owner.
3. PMWeb will be made available to all Contractor's personnel, subcontractor personnel, suppliers, consultants, Construction Manager, and Engineer.
4. The joint use of this system is to facilitate electronic exchange of information, automation of key processes, and overall management of Construction Phase Documentation.
5. PMWeb shall be the primary official means of project information submission and management.

B. User Access Limitations: The Construction Manager will initially manage the Contractor's access to PMWeb by allowing access and assigning user profiles to accepted Contractor personnel. User profiles will define levels of access into the system; determine assigned function based authorizations and user privileges. Subcontractors and suppliers will be given access to PMWeb by and through the Contractor. Entry of information exchanged and transferred between the Contractor and its subcontractors and suppliers on PMWeb shall be the responsibility of the Contractor.

C. Joint Ownership of Data: Data entered in a collaborative mode (entered with the intent to share as determined by permissions and workflows within the PMWeb system) by the Owner, Construction Manager, Engineer, and Contractor will be jointly owned.

D. Automated System Notification and Audit Log Tracking: Review comments made (or lack thereof) by the Owner on Contractor submitted documentation shall not relieve the Contractor from compliance with requirements of the Contract Documents. The Contractor is responsible for managing, tracking, and documenting the Work to comply with the requirements of the Contract Documents. Owner's acceptance via automated system notifications or audit

logs extends only to the face value of the submitted documentation and does not constitute validation of the Contractor's submitted information.

E. Submittals:

1. See Section 01 33 00 SUBMITTAL PROCEDURES.
2. Preconstruction Submittals List of Contractor's key PMWeb personnel. Include descriptions of key personnel's roles and responsibilities for this Project. Contractor should also identify their organizations administrator on the list.

F. Computer Requirements:

1. The Contractor shall use computer hardware and software that meets the requirements of the PMWeb system as required to access and utilize PMWeb. As recommendations are modified by PMWeb, the Contractor will upgrade their system(s) to meet or exceed the recommendations. Upgrading of the Contractor's computer systems will not be justification for a cost or time modification to the Contract.
2. The Contractor shall ensure that connectivity to the PMWeb system is accomplished through DSL, cable, T-1 or wireless communications systems. The minimum bandwidth requirements for using the system is 128kb/s. It is recommended a faster connection be used when uploading pictures and files into the system.
3. PMWeb currently supports Mozilla's Firefox v3.0-3.5, Apple's Safari v3.0-3.5, and Microsoft's Internet Explorer v7.0 web browsers for accessing the application.

G. Contractor Responsibility:

1. The Contractor shall be responsible for the validity of their information placed in PMWeb and for the abilities of their personnel.
2. Accepted users shall be knowledgeable in the use of computers, including Internet Browsers, email programs, CAD drawing applications, and Adobe Portable Document Format (PDF) document distribution program.
3. The Contractor shall utilize the existing forms in PMWeb to the maximum extent possible. If a form does not exist in PMWeb the Contractor must include a form of their own or provided by the Construction Manager as an attachment to a submittal.
4. Adobe PDF documents will be created through electronic conversion rather than optically scanned whenever possible. The Contractor is responsible for the training of their personnel in the use of PMWeb (outside what is provided by the Owner) and the other programs indicated above as needed.

H. Connectivity Problems: Provide a list of Contractor's key PMWeb personnel for the Construction Manager's acceptance. Contractor is responsible for adding and removing users from the system. The Construction Manager reserves the right to perform a security check on all potential users. The Contractor will be allowed to add additional personnel and subcontractors to PMWeb after clearance by security check.

I. Training:

1. The Owner has arranged and paid for training to be provided to the Contractor.
2. Training consists of web-based seminars in conjunction with a conference call.
3. Contractor shall arrange and pay for the facilities and hardware/software required to facilitate their own training.

PART 2 PRODUCTS

2.01 DESCRIPTION

A. PMWeb project management application (no or-equal).

PART 3 EXECUTION

3.01 PMWEB UTILIZATION

A. PMWeb shall be utilized in connection with all document and information management required by these Contract Documents.

3.02 SUBMITTALS

A. Shop Drawings:

1. Shop Drawing and design data documents shall be submitted PDF attachments to the PMWeb submittal workflow process and form. Examples of Shop Drawings include, but are not limited to:
   a. Standard manufacturer installation drawings.
   b. Drawings prepared to illustrate portions of the work designed or developed by the Contractor.
   c. Steel fabrication, piece, and erection drawings.

B. See Section 01 33 00 SUBMITTAL PROCEDURES.

3.03 PRODUCT DATA

A. Product catalog data and manufacturer's instructions shall be submitted as PDF attachments to the PMWeb submittal workflow process and form.

B. Examples of product data include, but are not limited to:

1. Manufacturer's printed literature.
2. Preprinted product specification data and installation instructions.

3.04 ADMINISTRATIVE OR INFORMATIONAL SUBMITTALS

A. All correspondence and preconstruction submittals shall be submitted using PMWeb. Examples of administrative submittals include, but are not limited to:

1. Permits.
2. Requests for substitutions (RFS).
3. List of contact personnel.
4. Requests for Information (RFI).

B. Network Analysis Schedules and associated reports and updates. Each schedule submittal specified in these Contract Documents shall be submitted as a native backed-up file (.PRX or .STX) of the scheduling program being used. The schedule shall also be posted as a PDF file in the format specified in these Contract Documents.

C. Plans for safety, demolition, environmental protection, and similar activities.

D. Quality Control Plan(s), Testing Plan and Log, Quality Control Reports, Production Reports, Quality Control Specialist Reports, Preparatory Phase Checklist, Initial Phase Checklist, Field Test reports, Summary reports, Rework Items List, etc.

E. Meeting minutes for quality control meetings, progress meetings, pre-installation meetings, etc.

F. Any general correspondence submitted.

G. Project Photos: Project photos shall be posted monthly to PMWeb.

3.05 COMPLIANCE SUBMITTALS

A. Test reports, certificates, and manufacture field report submittals shall be submitted on PMWeb as PDF attachments. Examples of compliance submittals include, but are not limited to:

1. Field test reports.
2. Quality Control certifications.
3. Manufacturer's documentation and certifications for quality of products and

materials provided.

3.06 RECORD AND CLOSEOUT SUBMITTALS

A. Operation and maintenance data and closeout submittals shall be submitted on PMWeb as PDF documents during the approval and review stage as specified, with actual set of documents submitted for final. Examples of record submittals include, but are not limited to:

1. Operation and Maintenance Manuals: Final documents shall be submitted as specified.
2. Extra materials, spare stock, etc., submittal forms shall indicate when actual materials are submitted.

3.07 FINANCIAL SUBMITTALS

A. Schedule of Value, Pay Estimates, and Change Request Proposals shall be submitted on PMWeb. Supporting material for Pay Estimates and Change Requests shall be submitted on PMWeb as PDF attachments. Examples of compliance submittals include, but are not limited to:

1. Contractor's Schedule of Values.
2. Contractor's Monthly Progress Payment Requests.
3. Contract Change proposals requested by the Owner.

3.08 SUBMITTAL PAPER COPIES

A. Contractor shall deliver bound and tabbed paper copies of every closed submittal to the Construction Manager within 1 week of the Construction Manager closing a submittal with any disposition as follows:

1. Each copy shall have the closed PMWeb cover page including the disposition and any comments.
2. Final copies of submittals returned with comments, but not requiring resubmittal shall incorporate revisions per the Engineer's comments.
3. Number of Paper Copies:
   a. Final O&M Manuals: Three copies as specified in the Section 01 78 23 OEPRATION AND MAINTENANCE DATA.
   b. All Other Submittals: Five copies as specified in Section 01 33 00, SUBMITTAL PROCEDURES.
   c. For submittals with attachments over 30 megabytes in size, provide one CD of the submittal for each required paper copy.

END OF SECTION

THIS PAGE INTENTIONALLY LEFT BLANK

SECTION 01 42 13
ABBREVIATIONS AND ACRONYMS

PART 1 GENERAL

1.01 REFERENCE TO STANDARDS AND SPECIFICATIONS OF TECHNICAL SOCIETIES

A. Reference to standards and specifications of technical societies and reporting and resolving discrepancies associated therewith shall be as provided in Article 3 of the General Conditions, and as may otherwise be required herein and in the individual Specification sections.

B. Work specified by reference to published standard or specification of government agency, technical association, trade association, professional society or institute, testing agency, or other organization shall meet requirements or surpass minimum standards of quality for materials and workmanship established by designated standard or specification.

C. Where so specified, products or workmanship shall also meet or exceed additional prescriptive, or performance requirements included within Contract Documents to establish a higher or more stringent standard of quality than required by referenced standard.

D. Where two or more standards are specified to establish quality, product and workmanship shall meet or exceed requirements of most stringent.

E. Where both a standard and a brand name are specified for a product in Contract Documents, proprietary product named shall meet or exceed requirements of specified reference standard.

F. Copies of standards and specifications of technical societies:
   1. Copies of applicable referenced standards have not been bound in these Contract Documents.
   2. Where copies of standards are needed by Contractor, obtain a copy or copies directly from publication source and maintain in an orderly manner at the Site as Work Site records, available to Contractor's personnel, Subcontractors, Owner, and Construction Manager.

1.02 ABBREVIATIONS

A. Abbreviations for trade organizations and government agencies: Following is a list of construction industry organizations and government agencies to which references may be made in the Contract Documents, with abbreviations used. Note that all the listed abbreviations may not be used or applicable for this Project.

AA	Aluminum Association
AABC	Associated Air Balance Council
AAMA	American Architectural Manufacturers Association

AASHTO	American Association of State Highway and Transportation Officials
ABMA	American Bearing Manufacturers' Association
ACI	American Concrete Institute
AEIC	Association of Edison Illuminating Companies
AGA	American Gas Association
AGMA	American Gear Manufacturers' Association
AI	Asphalt Institute
AISC	American Institute of Steel Construction
AISI	American Iron and Steel Institute
AITC	American Institute of Timber Construction
ALS	American Lumber Standards
AMCA	Air Movement and Control Association
ANSI	American National Standards Institute
APA	APA – The Engineered Wood Association
API	American Petroleum Institute
APWA	American Public Works Association
AHJ	Authority Having Jurisdiction
AHRI	Air-Conditioning, Heating, and Refrigeration Institute
ASA	Acoustical Society of America
ASABE	American Society of Agricultural and Biological Engineers
ASCE	American Society of Civil Engineers
ASHRAE	American Society of Heating, Refrigerating and Air-Conditioning Engineers, Inc.
ASME	American Society of Mechanical Engineers
ASNT	American Society for Nondestructive Testing
ASSE	American Society of Sanitary Engineering
ASTM	ASTM International
AWI	Architectural Woodwork Institute
AWPA	American Wood Preservers' Association
AWPI	American Wood Preservers' Institute
AWS	American Welding Society
AWWA	American Water Works Association
BHMA	Builders Hardware Manufacturers' Association
CBM	Certified Ballast Manufacturer
CDA	Copper Development Association
CGA	Compressed Gas Association
CISPI	Cast Iron Soil Pipe Institute
CMAA	Crane Manufacturers' Association of America
CRSI	Concrete Reinforcing Steel Institute
CS	Commercial Standard

1. CSA Canadian Standards Association
2. CSI Construction Specifications Institute
3. DIN Deutsches Institut für Normung e.V.
4. DIPRA Ductile Iron Pipe Research Association
5. EIA Electronic Industries Alliance
6. EJCDC Engineers Joint Contract Documents' Committee
7. ETL Electrical Test Laboratories
8. FAA Federal Aviation Administration
9. FCC Federal Communications Commission
10. FDA Food and Drug Administration
11. FEMA Federal Emergency Management Agency
12. FIPS Federal Information Processing Standards
13. FM FM Global
14. Fed. Spec. Federal Specifications (FAA Specifications)
15. FS Federal Specifications and Standards (Technical Specifications)
16. GA Gypsum Association
17. GANA Glass Association of North America
18. HI Hydraulic Institute
19. HMI Hoist Manufacturers' Institute
20. IBC International Building Code
21. ICBO International Conference of Building Officials
22. ICC International Code Council
23. ICEA Insulated Cable Engineers' Association
24. IFC International Fire Code
25. IEEE Institute of Electrical and Electronics Engineers, Inc.
26. IESNA Illuminating Engineering Society of North America
27. IFI Industrial Fasteners Institute
28. IGMA Insulating Glass Manufacturer's Alliance
29. IMC International Mechanical Code
30. INDA Association of the Nonwoven Fabrics Industry
31. IPC International Plumbing Code
32. ISA International Society of Automation
33. ISO International Organization for Standardization
34. ITL Independent Testing Laboratory
35. JIC Joint Industry Conferences of Hydraulic Manufacturers
36. MIA Marble Institute of America
37. MIL Military Specifications
38. MMA Monorail Manufacturers' Association
39. MSS Manufacturer's Standardization Society
40. NAAMM National Association of Architectural Metal Manufacturers

41. NACE NACE International
42. NBGQA National Building Granite Quarries Association
43. NEBB National Environmental Balancing Bureau
44. NEC National Electrical Code
45. NECA National Electrical Contractors Association
46. NEMA National Electrical Manufacturers' Association
47. NESC National Electrical Safety Code
48. NETA InterNational Electrical Testing Association
49. NFPA National Fire Protection Association
50. NHLA National Hardwood Lumber Association
51. NICET National Institute for Certification in Engineering Technologies
52. NIST National Institute of Standards and Technology
53. NRCA National Roofing Contractors Association
54. NRTL Nationally Recognized Testing Laboratories
55. NSF NSF International
56. NSPE National Society of Professional Engineers
57. NTMA National Terrazzo and Mosaic Association
58. NWWDA National Wood Window and Door Association
59. OSHA Occupational Safety and Health Act (both Federal and State)
60. PCI Precast/Prestressed Concrete Institute
61. PEI Porcelain Enamel Institute
62. PPI Plastic Pipe Institute
63. PS Product Standards Section-U.S. Department of Commerce
64. RMA Rubber Manufacturers' Association
65. RUS Rural Utilities Service
66. SAE SAE International
67. SDI Steel Deck Institute
68. SDI Steel Door Institute
69. SJI Steel Joist Institute
70. SMACNA Sheet Metal and Air Conditioning Contractors National Association
71. SPI Society of the Plastics Industry
72. SSPC The Society for Protective Coatings
73. STI/SPFA Steel Tank Institute/Steel Plate Fabricators Association
74. SWI Steel Window Institute
75. TEMA Tubular Exchanger Manufacturers' Association
76. TCA Tile Council of North America
77. TIA Telecommunications Industry Association
78. UBC Uniform Building Code
79. UFC Uniform Fire Code
80. UL Underwriters Laboratories Inc.

81. UMC Uniform Mechanical Code
82. USBR U.S. Bureau of Reclamation
83. WCLIB West Coast Lumber Inspection Bureau
84. WI Wood Institute
85. WWPA Western Wood Products Association

PART 2 PRODUCTS (NOT USED)

PART 3 EXECUTION (NOT USED)

END OF SECTION

THIS PAGE INTENTIONALLY LEFT BLANK

SECTION 01 43 33
MANUFACTURER'S FIELD SERVICES

PART 1 GENERAL

1.01 DEFINITIONS

A. Person-Day: One person for 8 hours within regular Contractor working hours.

1.02 SUBMITTALS

A. Informational Submittals:
   1. Training Schedule: Submit, in accordance with requirements of this Specification, not less than 21 days prior to start of equipment installation and revise as necessary for acceptance.
   2. Lesson Plan: Submit, in accordance with requirements of this Specification, proposed lesson plan not less than 21 days prior to scheduled training and revise as necessary for acceptance.
   3. Training Session Recordings: Furnish Owner with two complete sets of recordings fully indexed and cataloged with printed label stating session and date recorded.

1.03 QUALIFICATION OF MANUFACTURER'S REPRESENTATIVE

A. Authorized representative of the manufacturer, factory trained, and experienced in the technical applications, installation, operation, and maintenance of respective equipment, subsystem, or system, with full authority by the equipment manufacturer to issue the certifications required of the manufacturer. Additional qualifications may be specified in the individual specification section.

B. Representative subject to acceptance by Owner, Construction Manager, and Engineer. No substitute representatives will be allowed unless prior written approval by such has been given.

PART 2 PRODUCTS (NOT USED)

PART 3 EXECUTION

3.01 FULFILLMENT OF SPECIFIED MINIMUM SERVICES

A. Furnish manufacturers' services, when required by an individual specification section, to meet the requirements of this section.

B. Where time is necessary in excess of that stated in the Specifications for manufacturers' services, or when a minimum time is not specified, time required to perform specified services shall be considered incidental.

C. Schedule manufacturer' services to avoid conflict with other onsite testing or other manufacturers' onsite services.

D. Determine, before scheduling services, that conditions necessary to allow successful testing to have been met.

E. Only those days of service approved by Construction Manager will be credited to fulfill specified minimum services.

F. When specified in individual specification sections, manufacturer's onsite services shall include:
   1. Assistance during product (system, subsystem, or component) installation to include observation, guidance, instruction of Contractor's assembly, erection, installation or application procedures.
   2. Inspection, checking, and adjustment as required for product (system, subsystem, or component) to function as warranted by manufacturer and necessary to furnish Manufacturer's Certificate of Proper Installation.
   3. Providing, on a daily basis, copies of manufacturers' representatives field notes and data to Engineer and Construction Manager.
   4. Revisiting the Site as required to correct problems and until installation and operation are acceptable to Construction Manager.
   5. Resolution of assembly or installation problems attributable to or associated with respective manufacturer's products and systems.
   6. Assistance during functional and performance testing, and facility startup and evaluation.
   7. Training of Owner's personnel in the operation and maintenance of respective product as required.

3.02 MANUFACTURER'S CERTIFICATE OF PROPER INSTALLATION

A. A Manufacturer's Certificate of Proper Installation form, a copy of which is attached to this section, shall be completed and signed by equipment manufacturer's representative.

B. Such form shall certify signing party is a duly authorized representative of manufacturer, is empowered by manufacturer to inspect, approve, and operate their equipment and is authorized to make recommendations required to ensure equipment is complete and operational.

3.03 TRAINING

A. General:
   1. Furnish manufacturers' representatives for detailed classroom and hands-on training to Owner's personnel on operation and maintenance of specified product (system, subsystem, component) and as may be required in applicable Specifications.
   2. Furnish trained, articulate personnel to coordinate and expedite training, to be present during training coordination meetings with Owner, and familiar with operation and maintenance manual information specified in Section 01 78 23 OPERATION AND MAINTENANCE DATA.

3. Manufacturer's representative shall be familiar with facility operation and maintenance requirements as well as with specified equipment.
4. Furnish complete training materials, to include operation and maintenance data, to be retained by each trainee.

B. Training Schedule:
1. List specified equipment and systems that require training services and show:
   a. Respective manufacturer.
   b. Estimated dates for installation completion.
   c. Estimated training dates.
2. Allow for multiple sessions when several shifts are involved.
3. Adjust schedule to ensure training of appropriate personnel as deemed necessary by Owner, and to allow full participation by manufacturers' representatives. Adjust schedule for interruptions in operability of equipment.
4. Coordinate with Section 01 32 00 CONSTRUCTION PROGRESS DOCUMENTATION, and Section 01 91 14 TESTING, INTEGRATION, AND FACILITY STARTUP.

C. Lesson Plan:
1. When manufacturer or vendor training of Owner personnel is specified, prepare a lesson plan for each required course containing the following minimum information:
   a. Title and objectives.
   b. Recommended attendees (such as, managers, engineers, operators, maintenance).
   c. Course description, outline of course content, and estimated class duration.
   d. Format (such as, lecture, self-study, demonstration, hands-on).
   e. Instruction materials and equipment requirements.
   f. Resumes of instructors providing training.

D. Prestart up Training:
1. Coordinate training sessions with Owner's operating personnel and manufacturers' representatives and with submission of operation and maintenance manuals in accordance with Section 01 78 23, OPERATION AND MAINTENANCE DATA.
2. Complete at least 14 days prior to beginning of facility startup.

E. Post-startup Training: If required in Specifications, furnish and coordinate training of Owner's operating personnel by respective manufacturer's representatives.

F. Recording of Training Sessions:
1. Furnish video recording of prestart up and post-startup instruction sessions, including manufacturers' representatives' hands-on equipment instruction and classroom sessions.

2. Video training materials shall be produced by a qualified, professional video production company.
3. Use DVD format suitable for playback on standard equipment available commercially in the United States. Blu-ray® DVD format is not acceptable without Construction Manager's prior approval.
4. DVD may contain multiple training sessions. If multiple training sessions included on a DVD, provide with on-screen menu for playback selection.

3.04 SUPPLEMENT

A. The supplement listed below, following "End of Section," is part of this Specification.
   1. Manufacturer's Certificate of Proper Installation.

PART 4 PRODUCTS (NOT USED)

PART 5 EXECUTION (NOT USED)

END OF SECTION

MANUFACTURER'S CERTIFICATE OF PROPER INSTALLATION

OWNER _____ EQPT SERIAL NO: _____

EQPT TAG NO: _____ EQPT/SYSTEM: _____

PROJECT NO: _____ SPEC. SECTION: _____

I hereby certify that the above-referenced equipment/system has been:

(Check Applicable)

☐ Installed in accordance with Manufacturer's recommendations.

☐ Inspected, checked, and adjusted.

☐ Serviced with proper initial lubricants.

☐ Electrical and mechanical connections meet quality and safety standards.

☐ All applicable safety equipment has been properly installed.

☐ Functional tests.

☐ System has been performance tested and meets or exceeds specified performance requirements. (When complete system of one manufacturer)

Note: Attach any performance test documentation from manufacturer.

Comments: _____

_____

_____

_____

I, the undersigned Manufacturer's Representative, hereby certify that I am (i) a duly authorized representative of the manufacturer, (ii) empowered by the manufacturer to inspect, approve, and operate their equipment and (iii) authorized to make recommendations required to ensure equipment furnished by the manufacturer is complete and operational, except as may be otherwise indicated herein. I further certify that all information contained herein is true and accurate.

Date: _____, 20___

Manufacturer:_____

By Manufacturer's Authorized Representative: _____

(Authorized Signature)

SECTION 01 45 16.13
CONTRACTOR QUALITY CONTROL

PART 1 GENERAL

1.01 REFERENCES

A. The following is a list of standards which may be referenced in this section:
   1. ASTM International (ASTM):
      a. D3740, Evaluation of Agencies Engaged in the Testing and/or Inspection of Soil and Rock as Used in Engineering Design and Construction.
      b. E329, Use in the Evaluation of Testing and Inspection Agencies as Used in Construction.

1.02 DEFINITIONS

A. Contractor Quality Control (CQC): The means by which Contractor ensures that the construction, to include that performed by subcontractors and suppliers, complies with the requirements of the Contract.

1.03 SUBMITTALS

A. Informational Submittals:
   1. CQC Plan: Submit, not later than 30 days after receipt of Notice to Proceed.
   2. CQC Report: Submit, weekly, an original and one copy in report form.

1.04 OWNER'S QUALITY ASSURANCE

A. All Work is subject to Owner's quality assurance inspection and testing at all locations and at all reasonable times before acceptance to ensure strict compliance with the terms of the Contract Documents.

B. Owner's quality assurance inspections and tests are for the sole benefit of Owner and do not:
   1. Relieve Contractor of responsibility for providing adequate quality control measures.
   2. Relieve Contractor of responsibility for damage to or loss of the material before acceptance.
   3. Constitute or imply acceptance.
   4. Affect the continuing rights of Owner after acceptance of the completed Work.

C. The presence or absence of a quality assurance inspector does not relieve Contractor from any Contract requirement.

D. Promptly furnish all facilities, labor, and material reasonably needed for performing such safe and convenient inspections and tests as may be required by Construction Manager.

E. Owner may charge Contractor for any additional cost of inspection or test when Work is not ready at the time specified by Contractor for inspection or test, or when prior rejection makes re-inspection or retest necessary. Quality assurance inspections and tests will be performed in a manner that will not unnecessarily delay the Work.

PART 2 PRODUCTS (NOT USED)

PART 3 EXECUTION

3.01 GENERAL

A. Maintain an adequate inspection system and perform such inspections as will ensure that the Work conforms to the Contract Documents.

B. Maintain complete inspection records and make them available at all times to Owner and Construction Manager.

C. The quality control system shall consist of plans, procedures, and organization necessary to produce an end product that complies with the Contract Documents. The system shall cover all construction and demolition operations, both onsite and offsite, including Work by subcontractors, fabricators, suppliers and purchasing agents, and shall be keyed to the proposed construction sequence.

3.02 COORDINATION MEETING

A. After the Preconstruction Conference, but before start of construction, and prior to acceptance of the CQC Plan, schedule a meeting with Construction Manager and Owner to discuss the quality control system.

B. Develop a mutual understanding of the system details, including the forms for recording the CQC operations, control activities, testing, administration of the system for both onsite and offsite Work, and the interrelationship of Contractor's management and control with the Owner's Quality Assurance.

C. There may be occasions when subsequent conferences may be called by either party to reconfirm mutual understandings and/or address deficiencies in the CQC system or procedures that may require corrective action by Contractor.

3.03 QUALITY CONTROL ORGANIZATION

A. CQC System Manager:

1. Designate an individual within Contractor's organization who will be responsible for overall management of CQC and have the authority to act in CQC matters for the Contractor.
2. CQC System Manager shall be an experienced construction person, with construction experience on similar type Work.
3. CQC System Manager shall report to the Contractor's project manager or someone higher in the organization. Project Manager in this context shall mean

the individual with responsibility for the overall quality and production management of the Project.

4. CQC System Manager shall be onsite during construction; periods of absence may not exceed 2 weeks at any one time.
5. Identify an alternate for CQC System Manager to serve with full authority during the System Manager's absence. The requirements for the alternate will be the same as for designated CQC System Manager.

B. CQC Staff:
1. Designate a CQC staff, available at the Site at all times during progress, with complete authority to take any action necessary to ensure compliance with the Contract. CQC staff members shall be subject to acceptance by Construction Manager.
2. CQC staff shall take direction from CQC System Manager in matters pertaining to QC.
3. CQC staff must be of sufficient size to ensure adequate QC coverage of Work phases, work shifts, and work crews involved in the construction. These personnel may perform other duties but must be fully qualified by experience and technical training to perform their assigned QC responsibilities and must be allowed sufficient time to carry out these responsibilities.
4. The actual strength of the CQC staff may vary during any specific Work period to cover the needs of the Project. Add additional staff when necessary for a proper CQC organization.

C. Organizational Changes: Obtain Construction Manager's acceptance before replacing any member of the CQC staff. Requests for changes shall include name, qualifications, duties, and responsibilities of the proposed replacement.

3.04 QUALITY CONTROL PHASING

A. CQC shall include at least three phases of control to be conducted by CQC System Manager for all definable features of Work, as follows:
1. Preparatory Phase:
a. Notify Owner at least 48 hours in advance of beginning any of the required action of the preparatory phase.
b. This phase shall include a meeting conducted by the CQC System Manager and attended by the superintendent, other CQC personnel (as applicable), and the foreman responsible for the definable feature. The CQC System Manager shall instruct applicable CQC staff as to the acceptable level of workmanship required in order to meet Contract requirements.
c. Document the results of the preparatory phase meeting by separate minutes prepared by the CQC System Manager and attached to the QC report.
d. Perform prior to beginning Work on each definable feature of Work:
1) Review applicable Contract Specifications.
2) Review applicable Contract Drawings.

3) Verify that all materials and/or equipment have been tested, submitted, and approved.
4) Verify that provisions have been made to provide required control inspection and testing.
5) Examine the Work area to verify that all required preliminary Work has been completed and is in compliance with the Contract.
6) Perform a physical examination of required materials, equipment, and sample Work to verify that they are on hand, conform to approved Shop Drawing or submitted data, and are properly stored.
7) Review the appropriate activity hazard analysis to verify safety requirements are met.
8) Review procedures for constructing the Work, including repetitive deficiencies.
9) Document construction tolerances and workmanship standards for that phase of the Work.
10) Check to verify that the plan for the Work to be performed, if so required, has been accepted by Construction Manager.

2. Initial Phase:
   a. Accomplish at the beginning of a definable feature of Work:
      1) Notify Owner at least 48 hours in advance of beginning the initial phase.
      2) Perform prior to beginning Work on each definable feature of Work:
         a) Review minutes of the preparatory meeting.
         b) Check preliminary Work to verify compliance with Contract requirements.
         c) Verify required control inspection and testing.
         d) Establish level of workmanship and verify that it meets minimum acceptable workmanship standards. Comparison with sample panels is appropriate.
         e) Resolve all differences.
         f) Check safety to include compliance with and upgrading of the safety plan and activity hazard analysis. Review the activity analysis with each worker.
      3) Separate minutes of this phase shall be prepared by the CQC System Manager and attached to the QC report. Exact location of initial phase shall be indicated for future reference and comparison with follow-up phases.
      4) The initial phase should be repeated for each new crew to work onsite, or any time acceptable specified quality standards are not being met.
3. Follow-up Phase:
   a. Perform daily checks to verify continuing compliance with Contract requirements, including control testing, until completion of the particular feature of Work.

b. Daily checks shall be made a matter of record in the CQC documentation and shall document specific results of inspections for all features of Work for the day or shift.

c. Conduct final follow-up checks and correct all deficiencies prior to the start of additional features of Work that will be affected by the deficient Work. Constructing upon or concealing nonconforming Work will not be allowed.

4. Additional Preparatory and Initial Phases: Additional preparatory and initial phases may be conducted on the same definable features of Work as determined by Owner if the quality of ongoing Work is unacceptable; or if there are changes in the applicable QC staff or in the onsite production supervision or work crew; or if work on a definable feature is resumed after a substantial period of inactivity, or if other problems develop.

3.05 CONTRACTOR QUALITY CONTROL PLAN

A. General:

1. Plan shall identify personnel, procedures, control, instructions, test, records, and forms to be used.
2. An interim plan for the first 30 days of operation will be considered.
3. Construction will be permitted to begin only after acceptance of the CQC Plan or acceptance of an interim plan applicable to the particular feature of Work to be started.
4. Work outside of the features of Work included in an accepted interim plan will not be permitted to begin until acceptance of a CQC Plan or another interim plan containing the additional features of Work to be started.

B. Content:

1. Plan shall cover the intended CQC organization for the entire Contract and shall include the following, as a minimum:

a. Organization: Description of the quality control organization, including a chart showing lines of authority and acknowledgment that the CQC staff will implement the three-phase control system (see Paragraph QC Phasing) for all aspects of the Work specified.

b. CQC Staff: The name, qualifications (in resume format), duties, responsibilities, and authorities of each person assigned a QC function.

c. Letters of Authority: A copy of a letter to the CQC System Manager signed by an authorized official of the firm, describing the responsibilities and delegating sufficient authorities to adequately perform the functions of the CQC System Manager, including authority to stop Work which is not in compliance with the Contract. The CQC System Manager shall issue letters of direction to all other various quality control representatives outlining duties, authorities and responsibilities. Copies of these letters will also be furnished to Owner.

d. Submittals: Procedures for scheduling, reviewing, certifying, and managing submittals, including those of subcontractors, offsite fabricators, suppliers and purchasing agents.

e. Testing: Control, verification and acceptance testing procedures for each specific test to include the test name, frequency, specification paragraph containing the test requirements, the personnel and laboratory responsible for each type of test, and an estimate of the number of tests required.
f. Procedures for tracking preparatory, initial, and follow-up control phases and control, verification, and acceptance tests, including documentation.
g. Procedures for tracking deficiencies from identification through acceptable corrective action. These procedures will establish verification that identified deficiencies have been corrected.
h. Reporting procedures, including proposed reporting formats; include a copy of the CQC report form.

C. Acceptance of Plans: Acceptance of the Contractor's basic and addendum CQC plans is required prior to the start of construction. Acceptance is conditional and will be predicated on satisfactory performance during the construction. Owner reserves the right to require Contractor to make changes in the CQC plan and operations including removal of personnel, as necessary, to obtain the quality specified.

D. Notification of Changes: After acceptance of the CQC plan, Contractor shall notify Construction Manager, in writing, a minimum of 7 calendar days prior to any proposed change. Proposed changes are subject to acceptance by Construction Manager.

3.06 CONTRACTOR QUALITY CONTROL REPORT

A. As a minimum, prepare a CQC report for every 7 calendar days. Account for all days throughout the life of the Contract. Reports shall be signed and dated by CQC System Manager. Include copies of test reports and copies of reports prepared by QC staff.

B. Maintain current records of quality control operations, activities, and tests performed, including the Work of subcontractors and suppliers.

C. Records shall be on an acceptable form and shall be a complete description of inspections, the results of inspections, daily activities, tests, and other items, including but not limited to the following:
1. Status of Noncompliances issued by the Construction Manager.
2. Contractor/subcontractor and their areas of responsibility.
3. Operating plant/equipment with hours worked, idle, or down for repair.
4. Work performed today, giving location, description, and by whom. When a network schedule is used, identify each phase of Work performed each day by activity number.
5. Test and/or control activities performed with results and references to specifications/plan requirements. The control phase should be identified (Preparatory, Initial, Follow-up). List deficiencies noted along with corrective action.
6. Material received with statement as to its acceptability and storage.

7. Identify submittals reviewed, with Contract reference, by whom, and action taken.
8. Offsite surveillance activities, including actions taken.
9. Job safety evaluations stating what was checked, results, and instructions or corrective actions.
10. List instructions given/received and conflicts in Drawings and/or Specifications.
11. Contractor's verification statement.
12. Indicate a description of trades working on the Project; the number of personnel working; weather conditions encountered; and any delays encountered.
13. These records shall cover both conforming and deficient features and shall include a statement that equipment and materials incorporated in file work and workmanship comply with the Contract.

3.07 SUBMITTAL QUALITY CONTROL

A. Submittals shall be as specified in Section 01 33 00, Submittal Procedures. The CQC organization shall be responsible for certifying that all submittals are in compliance with the Contract requirements. Owner will furnish copies of test report forms upon request by Contractor. Contractor may use other forms as approved.

3.08 TESTING QUALITY CONTROL

A. Testing Procedure:
   1. Perform tests specified or required to verify that control measures are adequate to provide a product which conforms to Contract requirements. Perform the following activities and record the following data:
      a. Verify testing procedures comply with contract requirements.
      b. Verify facilities and testing equipment are available and comply with testing standards.
      c. Check test instrument calibration data against certified standards.
      d. Verify recording forms and test identification control number system, including all of the test documentation requirements, have been prepared.
      e. Documentation:
         1) Record results of all tests taken, both passing and failing, on the CQC report for the date taken.
         2) Include specification paragraph reference, location where tests were taken, and the sequential control number identifying the test.
         3) Actual test reports may be submitted later, if approved by Construction Manager, with a reference to the test number and date taken.
         4) Provide directly to Construction Manager an information copy of tests performed by an offsite or commercial test facility. Test results shall be signed by an engineer registered in the state where the tests are performed.
         5) Failure to submit timely test reports, as stated, may result in nonpayment for related Work performed and disapproval of the test facility for this Contract.

B. Testing Laboratories: Laboratory facilities, including personnel and equipment, utilized for testing soils, concrete, asphalt and steel shall meet criteria detailed in ASTM D3740 and ASTM E329, and be accredited by the American Association of Laboratory Accreditation (AALA), National Institute of Standards and Technology (NIST), National Voluntary Laboratory Accreditation Program (NVLAP), the American Association of State Highway and Transportation Officials (AASHTO), or other approved national accreditation authority. Personnel performing concrete testing shall be certified by the American Concrete Institute (ACI).

3.09 COMPLETION INSPECTION

A. CQC System Manager shall conduct an inspection of the Work at the completion of all the Work or any milestone established by a completion time stated in the Contract.

B. Punchlist:
   1. CQC System Manager shall develop a punch list of items which do not conform to the Contract requirements.
   2. Include punch list in the CQC report, indicating the estimated date by which the deficiencies will be corrected.
   3. CQC System Manager or staff shall make a second inspection to ascertain that all deficiencies have been corrected and so notify the Owner.
   4. These inspections and any deficiency corrections required will be accomplished within the time stated for completion of the entire Work or any particular increment thereof if the Project is divided into increments by separate completion dates.

END OF SECTION

SECTION 01 45 33

SPECIAL INSPECTION, OBSERVATION, AND TESTING

PART 1 GENERAL

1.01 SUMMARY

A. This section covers requirements for Special Inspection, Observation, and Testing required in accordance with Chapter 17 of the 2019 CBC and is in addition to and supplements requirements included in Statement of Special Inspections shown on Drawings.

1.02 REFERENCES

A. The following is a list of standards which may be referenced in this section:
   1. American Society of Civil Engineers (ASCE): 7, Minimum Design Loads for Buildings and Other Structures.
   2. 2019 California Building Code (CBC) by California Building Standards Commission.
   3. International Code Council (ICC):
      a. International Building Code (IBC).
      b. Evaluation Service (ICC-ES) Reports and Legacy Reports.

1.03 DEFINITIONS

A. Agencies and Personnel:
   1. Agency Having Jurisdiction (AHJ): Permitting building agency; may be a state, local, or other regional department, or individual including building official, fire chief, fire marshal, chief of a fire prevention bureau, labor department, or health department, electrical inspector; or others having statutory authority.
   2. Approved Agency: An established and recognized agency regularly engaged in conducting tests or furnishing inspection services, when such agency has been approved.
   3. Registered Design Professional in Responsible Charge: An individual who is registered or licensed to practice their respective design profession as defined by statutory requirements of professional registration laws of state or jurisdiction in which Project is to be constructed.
   4. Special Inspector: Qualified person employed by Owner who will demonstrate competence to the satisfaction of AHJ for inspection of a particular type of construction or operation requiring Special Inspection.

B. Statement of Special Inspections: Detailed written procedure contained on Drawings establishing systems and components subject to Special Inspection, Observation, and Testing during construction, type and frequency of testing, extent and duration of Special Inspection, and reports to be completed and distributed by Special Inspector.

C. Special Inspection:
   1. Special Inspection: Inspection required of materials, installation, fabrication, erection, or placement of components and connections requiring special expertise to ensure compliance with approved Contract Documents and referenced standards.
   2. Special Inspection, Continuous: Full-time observation of work requiring Special Inspection by an approved Special Inspector who is present in area where the Work is being performed.
   3. Special Inspection, Periodic: Part-time or intermittent observation of the Work requiring Special Inspection by an approved Special Inspector who is present in area where the Work has been or is being performed, and at completion of the Work.

D. Structural Systems and Components:
   1. Diaphragm: Component of structural lateral load resisting system consisting of roof, floor, or other membrane or bracing system acting to transfer lateral forces to vertical resisting elements of structure.
   2. Drag Strut or Collector: Component of structural lateral load resisting system consisting of diaphragm or shear wall element that collects and transfers diaphragm shear forces to vertical force-resisting elements or distributes forces within diaphragm or shear wall.
   3. Seismic-Force-Resisting System: That part of structural lateral load resisting system that has been considered in the design to provide required resistance to seismic forces identified on Drawings.
   4. Shear Wall: Component of structural lateral load resisting system consisting of a wall designed to resist lateral forces parallel to plane of the wall. Unless noted otherwise on Drawings, load-bearing walls with direct in-plane connections to roof and floors shall be considered to be shear walls.
   5. Wind Force Resisting System: That part of the structural system that has been considered in the design to provide required resistance to wind forces identified on Drawings.

E. Nonstructural Components:
   1. Architectural Component Supports: Structural members or assemblies of members which transmit loads and forces from architectural systems or components to structure, including braces, frames, struts, and attachments.
   2. Electrical Component Supports: Structural members or assemblies which transmit loads and forces from electrical equipment to structure, including braces, frames, legs, pedestals, and tethers, as well as elements forged or cast as part of component for anchorage.
   3. Mechanical and Plumbing Component Supports: Structural members or assemblies which transmit loads and forces from mechanical or plumbing equipment to structure, including braces, frames, skirts, legs, saddles, pedestals, snubbers, and tethers, as well as elements forged or cast as part of component for anchorage.

F. Professional Observation:

1. Does not include or waive responsibility for required Special Inspection or inspections by building official.
2. Requirements are indicated on Statement of Special Inspections provided on Drawings.
3. Geotechnical Observation: Visual observation of formational materials exposed during grading and over excavation of selected subgrade bearing surfaces and installation of deep foundation elements by a registered design professional for general conformance to Contract Documents.
4. Structural Observation: Visual observation of structural system(s) by a registered design professional for general conformance to Contract Documents.
5. Observation: Visual observation of selected by registered design professional for general conformance to Contract Documents.

1.04 SUBMITTALS

A. Informational Submittals:
1. Contractor's Statement of Responsibility: Form shall be completed by entity responsible for construction of and main seismic-force-resisting system, seismic-resisting component listed in Statement of Special Inspections. Refer to Article Supplements located at end of section.
2. Fabricator's Certificate of Compliance: Form shall be completed by entity responsible for shop fabrication of structural load-bearing members and assemblies. Refer to Article Supplements located at end of section. Form must be submitted no less than 2 weeks prior to commencing fabrication to provide for approval by AHJ and scheduling of Special Inspection, where required.

1.05 STATEMENT OF SPECIAL INSPECTIONS REQUIREMENTS

A. Designated Systems for Inspection:
1. Seismic-force-resisting systems designated under CBC Section 1705 and subject to Special Inspection under Section 1705: See Drawings for basic lateral load resisting systems for each structure and other designated seismic systems.
2. Wind-force-resisting systems designated under 2019 CBC Section 1705: See Drawings for basic lateral load resisting systems for each structure and other designated wind-resisting components. Not required for basic lateral load resisting system utilized.
3. Architectural, plumbing, mechanical, and electrical components subject to Special Inspection under CBC Section 1705.12.5 and 1705.12.6 for Seismic Resistance.
4. As included in Drawings and in support of building permit application, Project-specific requirements were prepared by Registered Design Professional in Responsible Charge.

B. Statement of Special Inspections:
   1. As included on Drawings and in support of building permit application, Project-specific requirements were prepared by Registered Design Professional in Responsible Charge. The following identifies elements of inspection, observation, and testing program to be followed in construction of the Work:
      a. Designated seismic systems and main seismic force-resisting systems and components that are subject to Special Inspection and Structural Observation for lateral load resistance.
      b. Special Inspection and testing required by CBC Section 1705 and other applicable sections and referenced standards therein.
      c. Type and frequency of Special Inspection required.
      d. Type and frequency of testing required.
      e. Required frequency and distribution of testing and Special Inspection reports to be distributed by Special Inspector to Construction Manager, Contractor, building official, and Owner.
      f. Geotechnical Observation to be Performed: Required frequency and distribution of Geotechnical Observation reports by registered design professional to Contractor, building official, and Owner.
      g. Structural Observations to be Performed: Required frequency and distribution of Structural Observation reports by registered design professional to Contractor, building official, and Owner.

C. Special Inspection and associated testing of shop fabrication and field construction will be performed by an approved accredited independent agency or by Authority Having Jurisdiction's (AHJ) approved, qualified inspection staff.

D. Code required Special Inspection with associated testing and Professional Observation, as provided in Statement of Special Inspections on Drawings and further provided in this section, is for benefit of Owner and does not:
   1. Relieve Contractor of responsibility for providing adequate quality control measures.
   2. Relieve Contractor of responsibility for damage to or loss of material before acceptance.
   3. Constitute or imply acceptance.
   4. Affect continuing rights of Owner after acceptance of completed Work.

E. The presence or absence of code required Special Inspector and Professional Observer does not relieve Contractor from Contract requirements.

F. Contractor is responsible for additional costs associated with Special Inspection and Testing and Observation when Work is not ready at time identified by Contractor and Special Inspectors and Professional Observer are onsite, but not able to provide contracted services.

G. Contractor is responsible for associated costs for additional Special Inspection and Testing and Professional Observation by Special Inspectors and Professional

Observers required because of rejection of materials of in place Work that cannot be made compliant to Contract Document without additional inspections and observation and testing.

PART 2 PRODUCTS (NOT USED)

PART 3 EXECUTION

3.01 GENERAL

A. Requirements of the Statement of Special Inspections are provided by the Owner. All other testing and inspections, unless noted otherwise, are provided by Contractor.

B. Provide access to shop or Site for Special Inspection and Testing and Professional Observation requirements.

C. Notify Construction Manager in advance of required Special Inspection and Professional Observation no later than 48 hours prior to date of Special Inspection and Professional Observation.

D. Provide access for Special Inspector to construction documents.

E. Retain special inspection records onsite to be readily available for review.

F. Cooperate with Special Inspector and provide safe access to the Work to be inspected.

G. Submit Fabricator's Certificates of Compliance for approved fabricators.

H. Provide reasonable auxiliary services as requested by the Special Inspector. Auxiliary services required include, but not limited to:
   1. Providing access to the Work and furnishing incidental labor and facilities necessary to facilitate inspections and tests to assist the Special Inspector in performing test/inspections.
   2. Providing storage space for the Special Inspector’s exclusive use, such as for storing and curing concrete test samples and delivery of samples to testing laboratories.
   3. Providing the Special Inspector with access to all approved submittals.
   4. Providing security and protection of samples and test equipment at the Project Site.
   5. Provide samples of materials to be tested in required quantities.

I. When required by Registered Design Professional in Responsible Charge, provide access for plumbing, mechanical and electrical component inspections for those items requiring certification.

J. Materials and systems shall be inspected during placement where Continuous Special Inspection is required.

K. Where Periodic Special Inspection is indicated in the Statement of Special Inspections:
   1. Schedule inspections for either during or at completion of their placement or a combination or both.
   2. Schedule periodically inspected Work (either inspected during or after its placement) so that corrections can be completed and re-inspected before Work is inaccessible.
   3. Sampling a portion of the Work is not allowed. Schedules shall provide for inspection of all Work requiring periodic inspection.

3.02 AHJ INSPECTIONS

A. Schedule all AHJ inspections (structural, electrical, and others as applicable) required to fulfill project permit requirements, including to Building and Fire Department inspections associated with City or County Building Permits, Fire Protection Permits and Hazardous Materials Permitting.

3.03 SUPPLEMENTS

A. The supplements listed below, following “End of Section,” are a part of this specification:
   1. Contractor’s Statement of Responsibility.
   2. Fabricator’s Certificate of Compliance.

END OF SECTION

CONTRACTOR'S STATEMENT OF RESPONSIBILITY

_____

(Project)

_____

(Name of Contracting Company)

_____

(Business Address)

(_____) _____ (_____) _____

(Telephone) (Fax)

I, (We) hereby certify that I am (we are) aware of the Special Inspection and Testing and Professional Observation requirements contained in Contract Documents for this Project for seismic force-resisting systems and for components including architectural, mechanical, and electrical components, as listed in Statement of Special Inspections on Drawings, and that:

1. I, (We) aware of the systems and the requirements of the special inspection and acknowledge our responsibility in the implementation of the Statement of Special Inspections for the construction of the following systems:

Facility	Specification	Lateral Force-Resisting System

2. Control of this Work will be exercised to obtain conformance with Contract Documents approved by building official.

3. Procedures within the Contractor's organization to be used for exercising control of the Work, method and frequency of reporting, and distribution of reports required under Statement of Special Inspections for Project are attached to this statement.

4. I, (We) will provide 48-hour notification to Construction Manager and approved inspection agency as required for structural tests and Special Inspection for Project.

5. The following person is hereby identified as exercising control over requirements of this section for the Work designated above:

Name: _____

Qualifications: _____

_____

_____

(Print name and official title of person signing this form)

Signed by: _____

Date: _____

Project Name: _____

FABRICATOR'S CERTIFICATE OF COMPLIANCE

Each approved fabricator that is exempt from Special Inspection of shop fabrication and implementation procedures per Section 2016 CBC must submit Fabricator's Certificate of Compliance at the completion of fabrication.

_____

(Project)

_____

(Fabricator's Name)

_____

(Business Address)

_____

(Certification or Approval Agency)

_____

(Certification Number)

_____

(Date of Last Audit or Approval)

Description of structural members and assemblies that have been fabricated:

_____

_____

_____

_____

_____

I hereby certify that items described above were fabricated in strict accordance with approved construction documents.

_____

(Name and Title) type or print

(Signature and Date)

Attach copies of fabricator's certification or building code evaluation service report and fabricator's quality control manual.

SECTION 01 50 00
TEMPORARY FACILITIES AND CONTROLS

PART 1 GENERAL

1.01 REFERENCES

A. The following is a list of standards which may be referenced in this section:
   1. American Association of Nurserymen (AAN): American Standards for Nursery Stock.
   2. Federal Emergency Management Agency (FEMA).
   3. National Fire Prevention Association (NFPA): 241, Standard for Safeguarding Construction, Alteration, and Demolition Operations.
   4. Telecommunications Industry Association (TIA); Electronic Industries Alliance (EIA): 568B, Commercial Building Telecommunications Cabling Standard.
   5. U.S. Department of Agriculture (USDA): Urban Hydrology for Small Watersheds.
   6. U.S. Weather Bureau: Rainfall-Frequency Atlas of the U.S. for Durations from 30 Minutes to 24 Hours and Return Periods from 1 to 100 Years.

1.02 SUBMITTALS

A. Informational Submittals:
   1. Copies of permits and approvals for construction as required by Laws and Regulations and governing agencies.
   2. Temporary Construction Submittals:
      a. Access Roads: Routes, cross-sections, and drainage facilities.
      b. Parking area plans.
      c. Contractor's field office, storage yard, and storage building plans, including gravel surfaced area.
      d. Fencing and protective barrier locations and details.
      e. Construction Manager's field office plans.
      f. Staging area location plan.
      g. Traffic and Pedestrian Control and Routing Plans: As specified herein, and proposed revisions thereto.
   3. Temporary Control Submittals:
      a. Noise control plan.
      b. Dust control plan.
      c. Submittals required as part of the Environmental Mitigation Monitoring and Reporting Program in Supplement 1 – Environmental Monitoring and Reporting Program.
      d. WPCP submittals required per Whitebook Section 1001-4.
      e. Plan for disposal of waste materials and intended haul routes.
   4. Temporary Utility Submittals:

a. Electric power supply and distribution plans.
b. Water supply and distribution plans.
c. Sanitary.

1.03 MOBILIZATION

A. Mobilization includes, but is not limited to, these principal items:
1. Obtaining required permits for temporary facilities.
2. Moving Contractor's field office and equipment required for first month operations onto Site.
3. Installing temporary construction power, wiring, and lighting facilities.
4. Providing onsite sanitary facilities and potable water facilities as specified and as required by Laws and Regulations, and governing agencies.
5. Arranging for and erection of Contractor's work and storage yard.
6. Posting OSHA required notices and establishing safety programs and procedures.
7. Having Contractor's superintendent at Site full time.
8. Providing Construction Manager's and Engineer's facilities.

B. Use area designated for Contractor's temporary facilities as shown on Drawings.

1.04 PROTECTION OF WORK AND PROPERTY

A. Comply with Owner's safety rules while on Owner's property.

B. Keep Owner informed of serious onsite accidents and related claims.

C. Use of Explosives: No blasting or use of explosives will be allowed onsite.

D. Maintain setbacks as shown on the Drawings.

1.05 VEHICULAR TRAFFIC

A. Traffic Routing Plan (limited to traffic within PLWTP): Show sequences of construction affecting use of roadways, time required for each phase of the Work, provisions for decking over excavations and phasing of operations to provide necessary access, and plans for signing, barricading, and striping to provide passages for pedestrians and vehicles. All rerouting within PLWTP shall be coordinated with PLWTP ahead of time.

PART 2 PRODUCTS

2.01 CONSTRUCTION MANAGER AND ENGINEER'S FIELD OFFICES

A. General:
1. Separate from Contractor's field office.

2. The Contractor shall provide field offices, equipment, services and utilities specified herein for the Owner's Representative and the Engineer at the project site.
3. Unless released earlier by the Owner's Representative in writing, said field office(s) shall be maintained in full operation at the site with all utilities connected and operable until the Notice of Completion has been executed or recorded. Upon execution or recordation of the Notice of Completion, or upon early release of the field office(s) by the Owner's Representative, the Contractor shall remove the field office(s) within 14 days from said date and shall restore the site occupied by said field office(s).

B. Office Facilities:
1. General: The Contractor shall provide all necessary electrical utility service connection and trailer wiring, plumbing, toilet and lavatory fixtures, air conditioning and heating equipment, and shall furnish all necessary light, heat, water, and janitorial services in connection with all field offices specified herein, for the duration of the Work.
2. Field office: The Contractor shall provide and maintain for the exclusive use of the Owner's Representative and the Engineer separate, well lighted, field office trailer(s) with two (2) toilet rooms. The area of said field office(s) shall not be less than 960 (24'x40') square feet, including toilet facilities. The Contractor shall provide all furnishings, services, and equipment specified herein. The office shall have a minimum of two outside doors with security locks and 10 keys provided. Landings and stairs shall be provided at each door, with a handicap access ramp provided at one door. The field office trailer will have a minimum of 3 offices, toilet rooms, one 10' x 20' conference room or area and a common area with sink and counter space and electrical outlets. Windows shall be provided with blinds. Contractor shall provide a preliminary layout of the field office trailer for approval by the Owner's Representative prior to fabrication of the trailer.
3. A minimum of four (4) 110-v ac duplex electric convenience outlets shall be provided in each individual office and four (4) in the conference room. Additional duplex outlets shall be evenly distributed around the common area. Each desk location shall have at least one duplex outlet. The electric distribution panel(s) shall be of sufficient size to provide uninterrupted service. Should sizing of panels be found inadequate Contractor shall, at no additional cost, increase the circuits and wiring to provide uninterrupted service. A dedicated 20-amp circuit shall be provided for the copy machine.
4. Three Ethernet outlets shall be provided in each office and shall be spaced throughout the common area and the conference room. Contractor shall provide all Ethernet cabling.

C. Field Office Furnishings:
1. The Contractor shall provide the following listed items in new condition or as approved by the Owner's Representative for the field office:
   a. 5 each - Standard 30 x 60-inch office desks with drawers
   b. 1 each - Plan table 36 x 72-inch top; 36-inches high
   c. 10 each – File cabinets, legal size, 4-5 drawer, with suspension racks

d. 15 each - Office chairs, standard arm rest type, adjustable, swivel, tilt-back with casters.
e. 10 each - Waste baskets.
f. 1 each – Reverse osmosis/cartridge filter water dispenser unit (supplying both hot and cold water) with continuous supply of paper cups.
g. 10 each - Book case, 30 x 72 x 12 inches
h. 20 each - Stackable chairs, cushion type (for conference table)
i. 8 each - Conference tables, 30” x 60”
j. 1 each - First aid kit.
k. 4 each - Fire extinguishers,
l. 4 each - Marker board, 2’ x 4’
m. 3 each – Marker board, 4’ x 8’
n. 1 each – Refrigerator/freezer, 20 cu ft minimum capacity
o. 1 each – Microwave oven
p. 1 each - Network printer: Provide a Sharp MX Network Printer or greater capable of 11X17 printing and network accessible. Contract for immediate site service, 1 each.
q. 1 each - Multi-Function Device (MFD): Provide a Konica BizHub or greater capable of color printing, 11X17 printing, scan to email and fax capabilities. Contract for immediate site service, 1 each.

D. Field Office Services:
1. The field office shall be provided with sufficient lighting to provide not less than 60 foot- candles at desk top height. Lighting shall be provided over the entrance doors.
2. Plumbing shall be connected to the sanitary sewer, when available. A continuous supply of toilet paper and paper towels shall be furnished.
3. Two (2) times a week (Tuesday and Thursday) janitorial services shall be performed after working hours each day. Offices shall be swept, dusted, and waste receptacles emptied. Toilet facilities shall be sanitized and cleaned.
4. Provide and Install Electrical power service. Monthly power bill shall be paid by the Contractor.

E. Computer Services:
1. Provide and install a 4' × 4' × ¾" fire-rated plywood backboard
   a. Provide and install a 120V AC dedicated outlet on a dedicated 15Amp circuit breaker. Single standard 3 prong 120V AC, 15A dedicated receptacle. Within 5' of equipment mount.
   b. Provide and install new #6 ground wire bonded to an MGN (except in CA) or UFER Ground terminated to a grounding bus bar 2" Sleeve(s).
   c. Backboard shall be mounted to wall with proper drywall anchors and not just screws.
   d. Active equipment shall not be installed within 3' of electrical panels or within 3' of water sources (sinks, wash basins).

   e. All equipment shall be installed in accordance with all ADA code (leaving 36" open fare way).
2. Provide and install two (2), 5-15P outlets on 120-volt, 15 amp circuits. Within three feet of the network racks.
3. Provide and install all labor, materials and equipment to connect to the City's SANNET fiber network.
4. Provide and install fourteen (10) network wall plates with two (2) data jacks per wall plate for a total twenty-eight (20) data jacks.
   a. All data jacks shall be clearly and professionally labeled with matching labels at the faceplate and at the patch panel. Naming convention shall be based upon the matrix attached. Handwritten labels are not acceptable.
   b. All data jacks shall be home runs from the faceplate to a Category 6 patch panel to the nearest IDF.
   c. Cabling between the wall jack to the patch panel shall be plenum rated cable where required by code. The Category 6 cables shall be "Blue" in color. Use T568A wiring pattern terminating into Keystone Jack, Category 6, 110 type, 90 degrees at the wall jack. The wall jack shall match the color of the faceplate.
   d. The cabling between the wall plate and the patch panel, the cabling will terminate into the patch panel using a T568A wiring pattern into a Keystone Jack, Category 6, 110 type, 90 degrees at the patch panel. The keystone shall match the color of the patch panel.
   e. All data jacks shall be tested and certified. The vendor will provide a complete testing report for all data jacks.
5. Install one (1), 48-port Category 6 Patch Panel
   a. Each patch panel will be a 2U, 48-port Category 6 Patch Panel.
6. Install a Wall mounted cabinet
   a. Rack Size - 19"
   b. Height (Rack Units) - 12U
   c. Dimensions (WxDxH) - 25.1 in x 23.6 in x 17.7 in
7. Starlink is slated to start satellite internet service in this area by 2023. If Startlink satellite service is available, the Contractor shall provide satellite internet to the field office. Include the required costs for establishing and maintaining satellite internet in the contract. If not, the Contractor shall coordinate with the City and provide Internet as an extension of PLWTP. The Contractor shall provide LAN Line telephone service and voicemail and will perform maintenance including move, add, and changes for the duration of the project. Each network component and UPS device will carry the stated maintenance types until thirty (30) days after Final Acceptance.
8. Contractor shall provide all consumable supplies necessary for complete operation of the equipment specified under this section shall be furnished by Contractor until thirty (30) days after Final Acceptance. These supplies include, but are not limited to, ink and toner cartridges, plain paper, first-aid supplies, and fire extinguishers and certifications.
9. Provide appropriate jacks, wiring, and equipment required for a complete telecommunications system.

10. Arrange and provide for telecommunication service for use during construction. Pay costs of installation, maintenance, and monthly service of internet connection.

F. Contractor shall pay for all permits and connection fees associated with the trailer installation.

2.02 PROJECT SIGN

A. Refer to Whitebook Section 3-11 for requirements for signage.

2.03 NOT USED.

PART 3 EXECUTION

3.01 CONSTRUCTION MANAGER'S AND ENGINEER'S FIELD OFFICE

A. Make available for Construction Manager's and Engineer's use prior to start of the Work at Site.

B. Locate as approved by Construction Manager; level, block, tie down, skirt, provide stairways, and relocate when necessary and approved. Construct on proper foundations and provide proper surface drainage and connections for utility services.

C. Provide minimum 100 square feet of gravel or crushed rock base, minimum depth of 4 inches, at each entrance.

D. Raise grade under field office, as necessary, to elevation adequate to avoid flooding.

E. Provide sanitary facilities in compliance with state and local health authorities.

F. Maintain in good repair and appearance, and provide weekly cleaning service and replenishment, as required, of paper towels, paper cups, hand soap, toilet paper, first-aid kit supplies, and bottled water.

G. Replenish, as needed, copy paper and toner.

3.02 TEMPORARY UTILITIES

A. Power:
   1. Electric power is available at Site (PLWTP). Make arrangements to tap from the nearby existing facility (Digester Gas Utilization Facility).

B. Lighting: Provide temporary lighting to meet applicable safety requirements to allow erection, application, or installation of materials and equipment, and observation or inspection of the Work.

C. Heating, Cooling, and Ventilating:

1. Provide as required to maintain adequate environmental conditions to facilitate progress of the Work, to meet specified minimum conditions for installation of materials, and to protect materials, equipment, and finishes from damage because of temperature or humidity.
2. Provide adequate forced air ventilation of enclosed areas to cure installed materials, to dispense humidity, and to prevent hazardous accumulations of dust, fumes, vapors, or gases.
3. Pay costs of installation, maintenance, operation, removal, and fuel consumed.
4. Provide portable unit heaters, complete with controls, oil- or gas-fired, and suitably vented to outside as required for protection of health and property.
5. If permanent natural gas piping is used for temporary heating units, do not modify or reroute gas piping without approval of utility company. Provide separate gas metering as required by utility.

D. Water:
1. Construction and potable water are available at Site. Make arrangements for metering the actual use and bear costs of water required for construction purposes and for drinking by construction personnel during construction.

E. Sanitary and Personnel Facilities:
1. Provide and maintain facilities for Contractor's employees, Subcontractors, and other onsite employers' employees. Service, clean, and maintain facilities and enclosures.

F. Telephone Service:
1. Contractor: Arrange and provide onsite telephone service for Contractor's use during construction. Pay costs of installation and monthly bills. Note that telephone reception at PLWTP is very poor / not available.

G. Fire Protection: Furnish and maintain on Site adequate firefighting equipment capable of extinguishing incipient fires. Comply with applicable parts of NFPA 241.

3.03 PROTECTION OF WORK AND PROPERTY

A. General:
1. Perform Work within right-of-way and easements in a systematic manner that minimizes inconvenience to others.
2. Maintain in continuous service existing oil and gas pipelines, underground power, telephone or communication cable, water mains, irrigation lines, sewers, poles and overhead power, and other utilities encountered along the line of the Work, unless other arrangements satisfactory to owners of said utilities have been made.
3. Where completion of the Work requires temporary or permanent removal or relocation of existing utility, coordinate activities with owner of said utility and perform work to their satisfaction.

4. Protect, shore, brace, support, and maintain underground pipes, conduits, drains, and other underground utility construction uncovered or otherwise affected by construction operations.
5. Keep fire hydrants and water control valves free from obstruction and available for use at all times.
6. In areas where Contractor's operations are adjacent to or near a utility, such as gas, telephone, television, electric power, water, sewer, or irrigation system, and such operations may cause damage or inconvenience, suspend operations until arrangements necessary for protection have been made by the Contractor.
7. Do not impair operation of existing sewer system. Prevent construction material, pavement, concrete, earth, volatile and corrosive wastes, and other debris from entering sewers, pump stations, or other sewer structures.
8. Maintain original Site drainage wherever possible.
9. Ensure that the required setbacks and restrictions as shown on Drawings are strictly followed.

B. Site Security:
   1. Provide and maintain temporary security fences as necessary to protect the Work and Contractor-furnished products not yet installed. Obtain Construction Manager's written permission before removal of temporary security fencing.

C. Barricades and Lights:
   1. Provide to protect existing facilities and adjacent properties from potential damage.
   2. Locate to enable access by facility operators.
   3. Illuminate barricades and obstructions with warning lights from sunset to sunrise.

D. Signs and Equipment
   1. Follow requirements of City Whitebook.

E. Trees and Plantings:
   1. Protect from damage and preserve trees, shrubs, and other plants outside limits of the Work and within limits of the Work, which are designated on Drawings to remain undisturbed.
      a. Where practical, tunnel beneath trees when on or near line of trench.
      b. Employ hand excavation as necessary to prevent tree injury.
      c. Do not stockpile materials or permit traffic within drip lines of trees.
      d. Provide and maintain temporary barricades around trees.
      e. Water vegetation as necessary to maintain health.
      f. Cover temporarily exposed roots with wet burlap and keep burlap moist until soil is replaced around roots.
      g. No trees, except those specifically shown on Drawings to be removed, shall be removed without written approval of Engineer.

h. Dispose of removed trees in a legal manner off the Site.

2. Replace each plant that dies as a result of construction activities.

F. Existing Structures:

1. Where Contractor contemplates removal of small structures such as signposts, and culverts that interfere with Contractor's operations, obtain approval of the City, PLWTP, and Construction Manager.
2. Replace items removed in their original location and a condition equal to or better than original.

G. Finished Construction: Protect finished floors and concrete floors exposed as well as those covered with composition tile or other applied surfacing.

H. Waterways: Keep ditches, culverts, and natural drainages continuously free of construction materials and debris.

I. Archaeological Finds:

1. Follow City Whitebook requirements if any Archeological items are discovered during construction.

J. Endangered and Threatened Species:

1. Take precautions necessary and prudent to protect native endangered and threatened flora and fauna.
2. Notify Engineer of construction activities that might threaten endangered and threatened species or their habitats.
3. Engineer will mark areas known as habitats of endangered and threatened species prior to commencement of onsite activities.
4. Additional areas will be marked by Engineer as other habitats of endangered and threatened species become known during construction.

3.04 TEMPORARY CONTROLS

A. Air Pollution Control:

1. Minimize air pollution from construction operations.
2. Burning of waste materials, rubbish, or other debris will not be permitted on or adjacent to Site.
3. Conduct operations of dumping rock and of carrying rock away in trucks to cause a minimum of dust. Give unpaved streets, roads, detours, or haul roads used in construction area a dust-preventive treatment or periodically water to prevent dust. Strictly adhere to applicable environmental regulations for dust prevention. Wash down or sweep paved streets to control fugitive dust. Cover or tarp all vehicles hauling dirt or spoils off site.
4. Provide and maintain temporary dust-tight partitions, bulkheads, or other protective devices during construction to permit normal operation of existing facilities. Construct partitions of plywood, insulating board, plastic sheets, or similar material. Construct partitions in such a manner that dust and dirt from

demolition and cutting will not enter other parts of existing building or facilities. Remove temporary partitions as soon as need no longer exists.

5. All diesel-fueled construction equipment must be Tier 3 or better.

B. Noise Control:
   1. Provide acoustical barriers so noise emanating from tools or equipment will not exceed legal noise levels.
   2. Noise Control Ordinance: San Diego Municipal Code, Section 59.5.01.
   3. Noise Control Plan: Propose plan to mitigate construction noise and to comply with noise control ordinances, including method of construction, equipment to be used, and acoustical treatments.

C. Water Pollution Control:
   1. Divert sanitary sewage and non-storm waste flow interfering with construction and requiring diversion to sanitary sewers. Do not cause or permit action to occur which would cause an overflow to existing waterway.
   2. Prior to commencing excavation and construction, obtain Owner's agreement with detailed plans showing procedures intended to handle and dispose of sewage, groundwater, and dewatering pump discharges.
   3. Comply with requirements of Whitebook Section 1001-4.
   4. Do not dispose of volatile wastes such as mineral spirits, oil, chemicals, or paint thinner in storm or sanitary drains. Disposal of wastes into streams or waterways is prohibited. Provide acceptable containers for collection and disposal of waste materials, debris, and rubbish.

D. Erosion, Sediment, and Flood Control: Provide, maintain, and operate temporary facilities as required by the Water Pollution Control Plan (WPCP), provided as part of the Contract Documents to control erosion and sediment releases, and to protect the Work and existing facilities from flooding during construction period.

E. Provide all requirements as required to comply with the Mitigation Monitoring and reporting Program shown on Drawings.

3.05 STORAGE YARDS AND BUILDINGS

A. Coordinate requirements with Section 01 61 00 COMMON PRODUCT REQUIREMENTS.

B. Temporary Storage Yards: Construct temporary storage yards for storage of products that are not subject to damage by weather conditions.

C. Temporary Storage Buildings:
   1. Provide environmental control systems that meet recommendations of manufacturers of equipment and materials stored.
   2. Arrange or partition to provide security of contents and ready access for inspection and inventory.

3. Store combustible materials (paints, solvents, fuels) in a well-ventilated and remote building meeting safety standard.

3.06 ACCESS ROADS AND DETOURS

A. Alignments for alternative routes to that provided on Drawings shall be approved by the Construction Manager.

B. Maintain drainage ways. Install and maintain culverts to allow water to flow beneath access roads. Provide corrosion-resistant culvert pipe of adequate strength to resist construction loads.

C. Provide gravel, crushed rock, or other stabilization material to permit access by all motor vehicles at all times.

D. Maintain road grade and crown to eliminate potholes, rutting, and other irregularities that restrict access.

E. Coordinate with Construction Manager detours and other operations affecting traffic and access. Provide at least 72 hours' notice to Construction Manager of operations that will alter access to Site.

F. Where access road crosses existing fences, install and maintain gates.

G. Upon completion of construction, restore ground surface disturbed by access road construction to original grade. Replace damaged or broken culverts with new culvert pipe of same diameter and material.

H. Construct access roads as shown and within easements, rights-of-way, or Project limits.

3.07 PARKING AREAS

A. Control vehicular parking to preclude interference with existing traffic or parking, access by emergency vehicles, Owner's operations, or construction operations.

B. If equipment staging and parking facilities are not identified in the Contract Documents, the Contractor's proposed locations for these purposes is subject to City approval.

C. Provide parking facilities for personnel working on Project. No employee or equipment parking will be permitted on Owner's existing paved areas except as specifically designated for Contractor's use.

D. Use area designated on Drawings for parking of Contractor's and Contractor's employees' vehicles.

3.08 VEHICULAR TRAFFIC

A. When vehicular rerouting is required within PLWTP, coordinate the changes ahead of time.

3.09 CLEANING DURING CONSTRUCTION

A. In accordance with General Conditions, as may be specified in other Specification sections, and as required herein.

B. Wet down exterior surfaces prior to sweeping to prevent blowing of dust and debris. At least weekly, sweep floors (basins, tunnels, platforms, walkways, roof surfaces), and pick up and dispose of debris.

C. Provide approved containers for collection and disposal of waste materials, debris, and rubbish. At least weekly, dispose of such waste materials, debris, and rubbish offsite.

D. At least weekly, brush sweep entry drive, roadways, and other streets and walkways affected by the Work and where adjacent to the Work.

END OF SECTION

SECTION 01 61 00
COMMON PRODUCT REQUIREMENTS

PART 1 GENERAL

1.01 DEFINITIONS

A. Products:

1. New items for incorporation in the Work, whether purchased by Contractor or Owner for the Project, or taken from previously purchased stock, and may also include existing materials or components required for reuse.

2. Includes the terms material, equipment, machinery, components, subsystem, system, hardware, software, and terms of similar intent and is not intended to change meaning of such other terms used in Contract Documents, as those terms are self-explanatory and have well recognized meanings in construction industry.

3. Items identified by manufacturer's product name, including make or model designation, indicated in manufacturer's published product literature, that is current as of the date of the Contract Documents.

1.02 DESIGN REQUIREMENTS

A. Where Contractor design is specified, design of installation, systems, equipment, and components, including supports and anchorage, shall be in accordance with provisions of the 2019 California Building Code (CBC) by California Building Standards Commission.

1. Wind: Basic wind speed, V: 105 mph (3-second gust), with exposure Category D, and Risk Category III.

2. Seismic: Risk Category III, importance factor, I_e, of 1.25, Site Class C, mapped maximum considered earthquake, 5 percent damped, spectral response at short periods, Ss 1.228, mapped maximum considered earthquake, 5 percent damped, spectral response at a period of 1 second, S1 0.423, unless specified otherwise.

1.03 ENVIRONMENTAL REQUIREMENTS

A. Altitude: Provide materials and equipment suitable for installation and operation under rated conditions at 25feet above sea level.

B. Provide equipment and devices installed outdoors or in unheated enclosures capable of continuous operation within an ambient temperature range of 36

degrees F to 91 degrees F. and suitable for marine environment. Point Loma Wastewater Treatment Plant is located very close (within a few hundred feet) to Pacific Ocean.

1.04 PREPARATION FOR SHIPMENT

A. When practical, factory assemble products. Mark or tag separate parts and assemblies to facilitate field assembly. Cover machined and unpainted parts that may be damaged by the elements with strippable protective coating.

B. Package products to facilitate handling and protect from damage during shipping, handling, and storage. Mark or tag outside of each package or crate to indicate its purchase order number, bill of lading number, contents by name, name of Project and Contractor, equipment number, and approximate weight. Include complete packing list and bill of materials with each shipment.

C. Extra Materials, Special Tools, Test Equipment, and Expendables:

1. Furnish as required by individual Specifications.

2. Schedule:

a. Ensure that shipment and delivery occur concurrent with shipment of associated equipment.

3. Packaging and Shipment:

a. Package and ship extra materials and special tools to avoid damage during long term storage in original cartons insofar as possible, or in appropriately sized, hinged-cover, wood, plastic, or metal box.

b. Prominently displayed on each package, the following:

1) Manufacturer's part nomenclature and number, consistent with Operation and Maintenance Manual identification system.

2) Applicable equipment description.

3) Quantity of parts in package.

4) Equipment manufacturer.

4. Deliver materials to Site.

5. Notify Construction Manager upon arrival for transfer of materials.

6. Replace extra materials and special tools found to be damaged or otherwise inoperable at time of transfer to Owner.

D. Request a minimum 7-day advance notice of shipment from manufacturer. Upon receipt of manufacturer's advance notice of shipment, promptly notify Construction Manager of anticipated date of equipment arrival.

E. Factory Test Results: Reviewed and accepted by Engineer before product shipment as required in individual Specification sections.

1.05 DELIVERY AND INSPECTION

A. Deliver products in accordance with accepted current Progress Schedule and coordinate to avoid conflict with the Work and conditions at Site. Deliver anchor bolts and templates sufficiently early to permit setting prior to placement of structural concrete.

B. Deliver products in undamaged condition, in manufacturer's original container or packaging, with identifying labels intact and legible. Include on label, date of manufacture and shelf life, where applicable.

C. Unload products in accordance with manufacturer's instructions for unloading or as specified. Record receipt of products at Site. Promptly inspect for completeness and evidence of damage during shipment.

D. Remove damaged products from Site and expedite delivery of identical new undamaged products, and remedy incomplete or lost products to provide that specified, so as not to delay progress of the Work.

1.06 HANDLING, STORAGE, AND PROTECTION

A. Handle and store products in accordance with manufacturer's written instructions and in a manner to prevent damage. Store in approved storage yards or sheds provided in accordance with Section 01 50 00 TEMPORARY FACILITIES AND CONTROLS. Provide manufacturer's recommended maintenance during storage, installation, and until products are accepted for use by Owner.

B. Manufacturer's instructions for material requiring special handling, storage, or protection shall be provided prior to delivery of material.

C. Arrange storage in a manner to provide easy access for inspection. Make periodic inspections of stored products to ensure that products are maintained under specified conditions, and free from damage or deterioration. Keep running account of products in storage to facilitate inspection and to estimate progress payments for products delivered, but not installed in the Work.

D. Store electrical, instrumentation, and control products, and equipment with bearings in weather-tight structures maintained above 60 degrees F. Protect electrical, instrumentation, and control products, and insulate against moisture, water, and dust damage. Connect and operate continuously space heaters furnished in electrical equipment.

E. Store fabricated products above ground on blocking or skids and prevent soiling or staining. Store loose granular materials in well-drained area on solid surface to prevent mixing with foreign matter. Cover products that are subject to deterioration with impervious sheet coverings; provide adequate ventilation to avoid condensation.

F. Store finished products that are ready for installation in dry and well-ventilated areas. Do not subject to extreme changes in temperature or humidity.

G. After installation, provide coverings to protect products from damage due to traffic and construction operations. Remove coverings when no longer needed.

H. Hazardous Materials: Prevent contamination of personnel, storage area, and Site. Meet requirements of product specification, codes, and manufacturer's instructions.

PART 2 PRODUCTS

2.01 GENERAL

A. Provide manufacturer's standard materials suitable for service conditions, unless otherwise specified in the individual Specifications.

B. Where product specifications include a named manufacturer, with or without model number, and also include performance requirements, named manufacturer's products must meet the performance specifications.

C. Like items of products furnished and installed in the Work shall be end products of one manufacturer and of the same series or family of models to achieve standardization for appearance, operation and maintenance, spare parts and replacement, manufacturer's services, and implement same or similar process instrumentation and control functions in same or similar manner.

D. Do not use materials and equipment removed from existing premises, except as specifically permitted by Contract Documents.

E. Provide interchangeable components of the same manufacturer, for similar components, unless otherwise specified.

F. Equipment, Components, Systems, and Subsystems: Design and manufacture with due regard for health and safety of operation, maintenance, and accessibility, durability of parts, and shall comply with applicable OSHA, state, and local health and safety regulations.

G. Regulatory Requirement: Coating materials shall meet federal, state, and local requirements limiting the emission of volatile organic compounds and for worker exposure.

H. Safety Guards: Provide for all belt or chain drives, fan blades, couplings, or other moving or rotary parts. Cover rotating part on all sides. Design for easy installation and removal. Use 16-gauge or heavier; galvanized steel, aluminum coated steel, or galvanized or aluminum coated 1/2-inch mesh expanded steel. Provide galvanized steel accessories and supports, including bolts. For outdoors application, prevent entrance of rain and dripping water.

I. Authority Having Jurisdiction (AHJ):

1. Provide the Work in accordance with NFPA 70, National Electrical Code (NEC). Where required by the AHJ, material and equipment shall be labeled or listed by a nationally recognized testing laboratory or other organization acceptable to the AHJ in order to provide a basis for approval under NEC.

2. Materials and equipment manufactured within the scope of standards published by Underwriters Laboratories, Inc. (UL) shall conform to those standards and shall have an applied UL listing mark.

J. Equipment Finish:

1. Provide manufacturer's standard finish and color, except where specific color is indicated.

2. If manufacturer has no standard color, provide equipment with finish as approved by Construction Manager.

K. Special Tools and Accessories: Furnish to Owner, upon acceptance of equipment, all accessories required to place each item of equipment in full operation. These accessory items include, but are not limited to, adequate oil and grease (as required for first lubrication of equipment after field testing), light bulbs, fuses, hydrant wrenches, valve keys, handwheels, chain operators, special tools, and other spare parts as required for maintenance.

L. Lubricant: Provide initial lubricant recommended by equipment manufacturer in sufficient quantity to fill lubricant reservoirs and to replace consumption during testing, startup, and operation until final acceptance by Owner.

M. Components and Materials in Contact with Water for Human Consumption: Comply with the requirements of the Safe Drinking Water Act and other applicable federal, state, and local requirements. Provide certification by manufacturer or an accredited certification organization recognized by the Authority Having Jurisdiction that components and materials comply with the maximum lead content standard in accordance with NSF/ANSI 61 and NSF/ANSI 372.

1. Use or reuse of components and materials without a traceable certification is prohibited.

2.02 FABRICATION AND MANUFACTURE

A. General:

1. Manufacture parts to U.S.A. standard sizes and gauges.

2. Two or more items of the same type shall be identical, by the same manufacturer, and interchangeable.

3. Design structural members for anticipated shock and vibratory loads.

4. Use 1/4-inch minimum thickness for steel that will be submerged, wholly or partially, during normal operation.

5. Modify standard products as necessary to meet performance specifications.

B. Lubrication System:

1. Require no more than weekly attention during continuous operation.

2. Convenient and accessible; oil drains with bronze or stainless steel valves and fill-plugs easily accessible from the normal operating area or platform. Locate drains to allow convenient collection of oil during oil changes without removing equipment from its installed position.

3. Provide constant-level oilers or oil level indicators for oil lubrication systems.

4. For grease type bearings, which are not easily accessible, provide and install stainless steel tubing; protect and extend tubing to convenient location with suitable grease fitting.

2.03 SOURCE QUALITY CONTROL

A. Where Specifications call for factory testing to be witnessed by Design Engineer, Owner, or Construction Manager, notify Construction Manager not less than 30 days prior to scheduled test date, unless otherwise specified.

B. Calibration Instruments: Bear the seal of a reputable laboratory certifying instrument has been calibrated within the previous 12 months to a standard endorsed by the National Institute of Standards and Technology (NIST).

C. Factory Tests: Perform in accordance with accepted test procedures and document successful completion.

PART 3 EXECUTION

3.01 INSPECTION

A. Inspect materials and equipment for signs of pitting, rust decay, or other deleterious effects of storage. Do not install material or equipment showing such effects. Remove damaged material or equipment from the Site and expedite delivery of identical new material or equipment. Delays to the Work resulting from material or equipment damage that necessitates procurement of new products will be considered delays within Contractor's control.

3.02 MANUFACTURER'S CERTIFICATE OF COMPLIANCE

A. When so specified, a Manufacturer's Certificate of Compliance, a copy of which is attached to this section, shall be completed in full, signed by entity supplying the product, material, or service, and submitted prior to shipment of product or material or execution of the services.

B. Construction Manager may permit use of certain materials or assemblies prior to sampling and testing if accompanied by accepted certification of compliance.

C. Such form shall certify proposed product, material, or service complies with that specified. Attach supporting reference data, affidavits, and certifications as appropriate.

D. May reflect recent or previous test results on material or product, if acceptable to Construction Manager.

3.03 INSTALLATION

A. Equipment Drawings show general locations of equipment, devices, and raceway, unless specifically dimensioned.

B. No shimming between machined surfaces is allowed.

C. Install the Work in accordance with NECA Standard of Installation, unless otherwise specified.

D. Install the Equipment per Section 01 88 15 ANCHORAGE AND BRACING.

E. Repaint painted surfaces that are damaged prior to equipment acceptance.

F. Do not cut or notch any structural member or building surface without specific approval of Engineer.

G. Handle, install, connect, clean, condition, and adjust products in accordance with manufacturer's instructions, and as may be specified. Retain a copy of manufacturers' instruction at Site, available for review at all times.

H. For material and equipment specifically indicated or specified to be reused in the Work:

1. Use special care in removal, handling, storage, and reinstallation to assure proper function in the completed Work.

2. Arrange for transportation, storage, and handling of products that require offsite storage, restoration, or renovation. Include costs for such Work in the Contract Price.

3.04 FIELD FINISHING

A. In accordance with Section 09 90 00 PROTECTIVE COATING and individual Specification sections.

3.05 ADJUSTMENT AND CLEANING

A. Perform required adjustments, tests, operation checks, and other startup activities.

3.06 LUBRICANTS

A. Fill lubricant reservoirs and replace consumption during testing, startup, and operation prior to acceptance of equipment by Owner.

3.07 ANCHOR BOLTS

A. Provide anchor bolts as specified in the specification sections and in accordance with Section 05 50 00 METAL FABRICATIONS.

3.08 SUPPLEMENTS

A. The supplement listed below, following "End of Section", is part of this Specification.

B. Manufacturer's Certificate of Compliance.

END OF SECTION

MANUFACTURER'S CERTIFICATE OF COMPLIANCE

OWNER: _____ PRODUCT, MATERIAL, OR SERVICE SUBMITTED: _____

PROJECT NAME: _____

PROJECT NO: _____

Comments: _____

_____

_____

_____

_____

_____

I hereby certify that the above-referenced product, material, or service called for by the Contract for the named Project will be furnished in accordance with all applicable requirements. I further certify that the product, material, or service are of the quality specified and conform in all respects with the Contract requirements and are in the quantity shown.

Date of Execution: _____, 20___

Manufacturer: _____

Manufacturer's Authorized Representative *(print)*: _____

_____

(Authorized Signature)

THIS PAGE INTENTIONALLY LEFT BLANK

SECTION 01 74 19

CONSTRUCTION WASTE MANAGEMENT AND DISPOSAL

PART 1 GENERAL

1.01 RELATED DOCUMENTS

A. Drawings and general provisions of the Contract, including General and Supplementary Conditions and other Division 01 Specification Sections, apply to this Section.

1.02 SUMMARY

A. Section includes administrative and procedural requirements for the following:

1. Salvaging nonhazardous construction waste.

2. Recycling nonhazardous construction waste.

3. Disposing of nonhazardous construction waste.

1.03 DEFINITIONS

A. Construction Waste: Building, structure, and site improvement materials and other solid waste resulting from construction, remodeling, renovation, or repair operations. Construction waste includes packaging.

B. Disposal: Removal of demolition or construction waste and subsequent salvage, sale, recycling, or deposit in landfill, incinerator acceptable to authorities having jurisdiction, or designated spoil areas on Owner's property.

C. Recycle: Recovery of demolition or construction waste for subsequent processing in preparation for reuse.

D. Salvage: Recovery of demolition or construction waste and subsequent sale or reuse in another facility.

E. Salvage and Reuse: Recovery of demolition or construction waste and subsequent incorporation into the Work.

1.04 MATERIALS OWNERSHIP

A. Unless otherwise indicated, demolition and construction waste become property of Contractor.

B. Historic items, relics, antiques, and similar objects including, but not limited to, cornerstones and their contents, commemorative plaques and tablets, and other items of interest or value to Owner that may be uncovered during demolition remain the property of Owner. Comply with applicable requirements of Section 6-6.2 of Whitebook.

1. Carefully salvage in a manner to prevent damage and promptly return to Owner.

1.05 ACTION SUBMITTALS

A. Waste Management Plan: Submit plan within 7 days of date established for the Notice to Proceed

1.06 INFORMATIONAL SUBMITTALS

A. Waste Reduction Progress Reports: Concurrent with each Application for Payment, submit monthly report. Use Form CWM-7 for construction waste. Include the following information:

1. Material category.

2. Generation points of waste.

3. Total quantity of waste in tons.

4. Quantity of waste salvaged, both estimated and actual in tons.

5. Quantity of waste recycled, both estimated and actual in tons.

6. Total quantity of waste recovered (salvaged plus recycled) in tons.

7. Total quantity of waste recovered (salvaged plus recycled) as a percentage of total waste.

B. Waste Reduction Calculations: Before request for Substantial Completion, submit calculated end-of-Project rates for salvage, recycling, and disposal as a percentage of total waste generated by the Work.

C. Records of Donations: Indicate receipt and acceptance of salvageable waste donated to individuals and organizations. Indicate whether organization is tax exempt.

D. Records of Sales: Indicate receipt and acceptance of salvageable waste sold to individuals and organizations. Indicate whether organization is tax exempt.

E. Recycling and Processing Facility Records: Indicate receipt and acceptance of recyclable waste by recycling and processing facilities licensed to accept them. Include manifests, weight tickets, receipts, and invoices.

F. Landfill and Incinerator Disposal Records: Indicate receipt and acceptance of waste by landfills and incinerator facilities licensed to accept them. Include manifests, weight tickets, receipts, and invoices.

G. Qualification Data: For waste management coordinator.

1.07 QUALITY ASSURANCE

A. Waste Management Coordinator Qualifications: Experienced firm, or individual employed and assigned by General Contractor, with a record of successful waste management coordination of projects with similar requirements. Superintendent may serve as Waste Management Coordinator.

B. Regulatory Requirements: Comply with transportation and disposal regulations of authorities having jurisdiction.

C. Waste Management Conference(s): Conduct conference(s) at Project site to comply with requirements in Section 01 31 13 PROJECT COORDINATION. Review methods and procedures related to waste management including, but not limited to, the following:

1. Review and discuss waste management plan including responsibilities of each contractor and waste management coordinator.

2. Review requirements for documenting quantities of each type of waste and its disposition.

3. Review and finalize procedures for materials separation and verify availability of containers and bins needed to avoid delays.

4. Review procedures for periodic waste collection and transportation to recycling and disposal facilities.

5. Review waste management requirements for each trade.

1.08 WASTE MANAGEMENT PLAN

A. General: Develop a waste management plan according to the requirements in this Section and in accordance with the LEED BD+C v4 prerequisite for Construction and Demolition Waste Management Planning, the LEED BD+C v4 credit Construction and Demolition Waste Management, the City of San Diego's New Construction and Demolition Debris Diversion Requirement and the California Green Building Code. Plan shall consist of waste identification, waste reduction work plan, including identification of five material steams. Indicate quantities by weight or volume but use same units of measure throughout waste management plan.

B. Waste Identification: Indicate anticipated types and quantities of site-clearing and construction waste generated by the Work. Use Form CWM-1 for construction waste. Include estimated quantities and assumptions for estimates.

C. Waste Reduction Work Plan: List each type of waste and whether it will be salvaged, recycled, or disposed of in landfill or incinerator. Use Form CWM-3 for construction waste. Include points of waste generation, total quantity of each type of waste, quantity for each means of recovery, and handling and transportation procedures.

1. Salvaged Materials for Donation: For materials that will be donated to individuals and organizations, include list of their names, addresses, and telephone numbers.

2. Recycled Materials: Include list of local receivers and processors and type of recycled materials each will accept. Include names, addresses, and telephone numbers.

3. Disposed Materials: Indicate how and where materials will be disposed of. Include name, address, and telephone number of each landfill and incinerator facility.

4. Handling and Transportation Procedures: Include method that will be used for separating recyclable waste including sizes of containers, container labeling, and designated location where materials separation will be performed.

PART 2 PRODUCTS

2.01 RECYCLING RECEIVERS AND PROCESSORS

A. Subject to compliance with requirements, available recycling receivers and processors include, but are not limited to, the following:

1. The City of San Diego's published Certified Construction & Demolition Recycling Facilities recyclingworks.com

2.02 PERFORMANCE REQUIREMENTS

A. General: Achieve end-of-Project rates for salvage/recycling of 75 percent by weight of total nonhazardous solid waste generated by the Work and separation of four waste streams excluding landfill. Practice efficient waste management in the use of materials in the course of the Work. Use all reasonable means to divert construction and demolition waste from landfills and incinerators. Facilitate recycling and salvage of materials, including the following:

1. Construction Waste:

a. Masonry and CMU.

b. Lumber.

c. Wood sheet materials.

d. Wood trim.

e. Metals.

f. Roofing.

g. Insulation.

h. Carpet and pad.

i. Gypsum board.

j. Piping.

k. Electrical conduit.

l. Packaging: Regardless of salvage/recycle goal indicated in "General" Paragraph above, salvage or recycle 100 percent of the following uncontaminated packaging materials:

1) Paper.

2) Cardboard.

3) Boxes.

4) Plastic sheet and film.

5) Polystyrene packaging.

6) Wood crates.

7) Wood pallets.

8) Plastic pails.

m. Construction Office Waste: Regardless of salvage/recycle goal indicated in "General" Paragraph above, salvage or recycle 100 percent of the following construction office waste materials:

1) Paper.

2) Aluminum cans.

3) Glass containers.

n. Electrical wiring

PART 3 EXECUTION

3.01 PLAN IMPLEMENTATION

A. General: Implement approved waste management plan. Provide handling, containers, storage, signage, transportation, and other items as required to implement waste management plan during the entire duration of the Contract.

1. Comply with operation, termination, and removal requirements in Section 01 50 00 TEMPORARY FACILITIES AND CONTROLS.

B. Waste Management Coordinator: Engage a waste management coordinator to be responsible for implementing, monitoring, and reporting status of waste management work plan.

C. Training: Train workers, subcontractors, and suppliers on proper waste management procedures, as appropriate for the Work.

1. Distribute waste management plan to everyone concerned within 3 days of submittal return.

2. Distribute waste management plan to entities when they first begin work on-site. Review plan procedures and locations established for salvage, recycling, and disposal.

D. Site Access and Temporary Controls: Conduct waste management operations to ensure minimum interference with roads, streets, walks, walkways, and other adjacent occupied and used facilities.

1. Designate and label specific areas on Project site necessary for separating materials that are to be salvaged and recycled.

2. Comply with Section 01 50 00 TEMPORARY FACILITIES AND CONTROLS for controlling dust and dirt, environmental protection, and noise control.

3.02 RECYCLING CONSTRUCTION WASTE, GENERAL

A. General: Recycle paper and beverage containers used by on-site workers.

B. Recycling Incentives: Revenues, savings, rebates, tax credits, and other incentives received for recycling waste materials shall accrue to Contractor

C. Preparation of Waste: Prepare and maintain recyclable waste materials according to recycling or reuse facility requirements. Maintain materials free of dirt, adhesives, solvents, petroleum contamination, and other substances deleterious to the recycling process.

D. Procedures: Separate recyclable waste from other waste materials, trash, and debris. Separate recyclable waste by type (minimum allowable is 4 streams) at Project site to the maximum extent practical according to approved construction waste management plan.

1. Provide appropriately marked containers or bins for controlling recyclable waste until removed from Project site. Include list of acceptable and unacceptable materials at each container and bin.

a. Inspect containers and bins for contamination and remove contaminated materials if found.

2. Stockpile processed materials on-site without intermixing with other materials. Place, grade, and shape stockpiles to drain surface water. Cover to prevent windblown dust.

3. Stockpile materials away from construction area. Do not store within drip line of remaining trees.

4. Store components off the ground and protect from the weather.

5. Remove recyclable waste from Owner's property and transport to recycling receiver or processor as often as required to prevent overfilling bins.

3.03 RECYCLING CONSTRUCTION WASTE

A. Packaging:

1. Cardboard and Boxes: Break down packaging into flat sheets. Bundle and store in a dry location.

2. Polystyrene Packaging: Separate and bag materials.

3. Pallets: As much as possible, require deliveries using pallets to remove pallets from Project site. For pallets that remain on-site, break down pallets into component wood pieces and comply with requirements for recycling wood.

4. Crates: Break down crates into component wood pieces and comply with requirements for recycling wood.

B. Gypsum Board: Stack large clean pieces on wood pallets or in container and store in a dry location.

C. Paint: Seal containers and store by type.

3.04 DISPOSAL OF WASTE

A. General: Except for items or materials to be salvaged or recycled, remove waste materials from Project site and legally dispose of them in a landfill or incinerator acceptable to authorities having jurisdiction.

1. Except as otherwise specified, do not allow waste materials that are to be disposed of accumulate on-site.

2. Remove and transport debris in a manner that will prevent spillage on adjacent surfaces and areas.

B. General: Except for items or materials to be salvaged or recycled, remove waste materials and legally dispose of at designated spoil areas on Owner’s property.

C. Burning: Do not burn waste materials.

D. Burning: Burning of waste materials is permitted only at designated areas on Owner's property, provided required permits are obtained. Provide full-time monitoring for burning materials until fires are extinguished.

3.05 FINAL STATUS REPORT

A. A Final Status Report demonstrating final disposition, either diverted or disposed, of materials generated by the Project is required before final payment.

3.06 ATTACHMENTS

A. Form CWM-1 for construction waste identification.

B. Form CWM-3 for construction waste reduction work plan.

C. Form CWM-7 for construction waste reduction progress report.

END OF SECTION

FORM CWM-1: CONSTRUCTION WASTE IDENTIFICATION							
MATERIAL CATEGORY	GENERATION POINT	EST. QUANTITY OF MATERIALS RECEIVED* (a)	EST. WASTE - % (b)	TOTAL EST. QUANTITY OF WASTE* (c = a x b)	EST. VOLUME cy (cm)	EST. WEIGHT tons (tonnes)	REMARKS AND ASSUMPTIONS
Packaging: Cardboard							
Packaging: Boxes							
Packaging: Plastic Sheet or Film							
Packaging: Polystyrene							
Packaging: Pallets or Skids							
Packaging: Crates							
Packaging: Paint Cans							
Packaging: Plastic Pails							
Site-Clearing Waste							
Masonry or CMU							
Lumber: Cut-Offs							
Lumber: Warped Pieces							
Plywood or OSB (scraps)							
Wood Forms							
Wood Waste Chutes							
Wood Trim (cut-offs)							
Metals							

Insulation							
Roofing							
Joint Sealant Tubes							
Gypsum Board (scraps)							
Carpet and Pad (scraps)							
Piping							
Electrical Conduit							
Other:							

FORM CWM-3: CONSTRUCTION WASTE REDUCTION WORK PLAN						
MATERIAL CATEGORY	GENERATION POINT	TOTAL EST. QUANTITY OF WASTE tons (tonnes)	DISPOSAL METHOD AND QUANTITY			HANDLING AND TRANSPORTATION PROCEDURES
			EST. AMOUNT SALVAGED tons (tonnes)	EST. AMOUNT RECYCLED tons (tonnes)	EST. AMOUNT DISPOSED TO LANDFILL tons (tonnes)	
Packaging: Cardboard						
Packaging: Boxes						
Packaging: Plastic Sheet or Film						
Packaging: Polystyrene						
Packaging: Pallets or Skids						
Packaging: Crates						
Packaging: Paint Cans						
Packaging: Plastic Pails						
Site-Clearing Waste						
Masonry or CMU						
Lumber: Cut-Offs						
Lumber: Warped Pieces						
Plywood or OSB (scraps)						
Wood Forms						

Wood Waste Chutes						
Wood Trim (cut-offs)						
Metals						
Insulation						
Roofing						
Joint Sealant Tubes						
Gypsum Board (scraps)						
Carpet and Pad (scraps)						
Piping						
Electrical Conduit						
Other:						

FORM CWM-7: CONSTRUCTION WASTE REDUCTION PROGRESS REPORT								
MATERIAL CATEGORY	GENERATION POINT	TOTAL QUANTITY OF WASTE tons (tonnes) (A)	QUANTITY OF WASTE SALVAGED		QUANTITY OF WASTE RECYCLED		TOTAL QUANTITY OF WASTE RECOVERED tons (tonnes) (d = b + c)	TOTAL QUANTITY OF WASTE RECOVERED % (d / a X 100)
			ESTIMATED tons (tonnes)	ACTUAL tons (tonnes) (b)	ESTIMATED tons (tonnes)	ACTUAL tons (tonnes) (c)		
Packaging: Cardboard								
Packaging: Boxes								
Packaging: Plastic Sheet or Film								
Packaging: Polystyrene								
Packaging: Pallets or Skids								
Packaging: Crates								
Packaging: Paint Cans								
Packaging: Plastic Pails								
Site-Clearing Waste								
Masonry or CMU								
Lumber: Cut-Offs								
Lumber: Warped Pieces								

Plywood or OSB (scraps)								
Wood Forms								
Wood Waste Chutes								
Wood Trim (cut-offs)								
Metals								
Insulation								
Roofing								
Joint Sealant Tubes								
Gypsum Board (scraps)								
Carpet and Pad (scraps)								
Piping								
Electrical Conduit								
Other:								

SECTION 01 75 18

DISINFECTION

PART 1 GENERAL

1.01 SUMMARY

A. Section includes: Cleaning and disinfection requirements for new and existing facilities affected by the Work.

1.02 REFERENCES

A. American Water Works Association (AWWA):
   1. C651 - Disinfecting Water Mains.
   2. C652 - Disinfection of Water Storage Facilities.
   3. C653 - Disinfection of Water Treatment Plants.

1.03 SUBMITTALS

A. Submit disinfection test plan which details procedure to be utilized to disinfect the facilities including:
   1. Method and locations of disinfectant application.
   2. Locations of sampling points.
   3. Method of flushing and location of flushing ports (as appropriate for method of chlorination).
   4. Method of dechlorination (as appropriate for method of chlorination).
   5. Disposal location for chlorinated water (as appropriate for method of chlorination).

B. Submit disinfection reports and include the following:
   1. Date issued.
   2. Project name and location.
   3. Treatment subcontractor's name, address, and phone number.
   4. Type and form of disinfectant used.
   5. Time and date of disinfectant injection start.
   6. Time and date of disinfectant injection completion.
   7. Test locations.
   8. Initial and 24-hour disinfectant residuals in milligrams per liter for each outlet tested.
   9. Time and date of flushing start.
   10. Time and date of flushing completion.

11. Disinfectant residual after flushing in milligrams per liter for each outlet tested.

1.04 OWNER'S RESPONSIBILITIES

A. The City will perform a chlorine residual test prior to flushing.

B. Bacteriological sampling and testing will be performed by the City Water Quality Laboratory.

1.05 PRODUCT DELIVERY, STORAGE, AND HANDLING

A. Protect chlorine and bacteriological samples against damage and contamination.

B. Maintain caution labels on hazardous materials.

C. Maintain storage room dry and with temperatures as uniform as possible between 60 degrees Fahrenheit and 80 degrees Fahrenheit.

1.06 PROTECTION

A. Provide necessary signs, barricades, and notices to prevent persons from accidentally consuming water or disturbing system being treated.

PART 2 PRODUCTS

2.01 MATERIALS

A. Disinfectant: Free chlorine in liquid, powder, tablet, or gas form in accordance with AWWA C653.

B. Dechlorination agent: Sulfur dioxide, sodium bisulfate, sodium sulfite, or sodium thiosulfate in accordance with AWWA C653.

PART 3 EXECUTION

3.01 PRELIMINARY CLEANING

A. Complete hydrostatic/leakage tests prior to disinfection.

B. Clean all newly constructed and/or modified facilities, including filters, process water tanks and conveyance facilities, such as pipes and channels at the plant, in accordance with AWWA C653 and the following:

1. Remove all debris and material not associated with the structure or process prior to disinfection.

2. Clean all wall, floor, ceiling, and attached surfaces by use of high-pressure water jet, sweeping, scrubbing, or equally effective means.
3. Remove all water, paint flakes, sediment, dirt, and foreign material accumulated during cleaning.
4. Remove by flushing or other means, soil and debris from water pipes and channels in accordance with AWWA C651.
5. Protect surfaces from adverse environmental exposure between the preliminary cleaning and the disinfection stages.

C. MF System: All membrane system components, subsystems, and piping connecting to the membrane system must be flushed prior to module installation.
   1. After the MF Feed Tank is cleaned per Section 3.01 B, flush MF Feed and Filtrate piping at the maximum design velocity through the MF racks and into the RO Feed Tank. An inline conical strainer shall be used to prevent flushed debris from entering the RO Feed Tank.
   2. Furnish and install dummy modules on the racks to facilitate flushing. Dummy modules shall be schedule 80 PVC. The velocity through each dummy module must be less than or equal to 10 feet per second at the maximum flushing flow rate.
   3. After flushing, the MF Feed Tank and RO Feed Tank shall be emptied and cleaned per Section 3.01 B prior to sending water to the RO system.

D. Prior to chlorination, clean all newly constructed and/or modified facilities to be disinfected in accordance with AWWA C651, C652, or C653, as applicable.

3.02 SURFACES TO BE DISINFECTED

A. All interior surfaces of the MF and RO System Tanks etc., including the ceilings.

B. All wetted surfaces associated with conveyance elements, such as pipes and channels downstream of the MBR Filtrate Tanks.

C. Any existing wetted surface that may have been contaminated during the construction process.

D. Piping systems that are used to convey water, solutions, or chemicals to process water or potable water facilities.

3.03 DISINFECTION OF WATER LINES

A. Cleaning:

1. Remove by flushing or other means, soil and debris from the water tanks in accordance with AWWA C652 prior to chlorination.

B. Inspection:
   1. Verify that water system is completed and cleaned of soil and debris prior to chlorination.
   2. Start disinfection when conditions are satisfactory.

C. System treatment:
   1. Perform disinfection of water lines and structures in accordance with AWWA C651, C652, and C653, and as specified in this Section.
   2. Starting at outlet closest to water source, bleed water from each outlet until water produces odor of disinfectant. Repeat process at each outlet throughout system.
   3. Test for disinfectant residual at each of following locations and other locations in accordance with submitted disinfection test plan:
      a. Ends of piping runs.
      b. Remote outlets.
      c. Tanks.
      d. At least 2 outlets on each building floor where directed.
      e. Drain lines.
      f. Filters and effluent channels and piping.
   4. Maintain disinfectant in system for appropriate 6-hour or 24-hour interval in accordance with AWWA C652.
   5. When disinfectant residual is less than 10 milligrams per liter after 24 hours, repeat system treatment.
   6. Stainless steel piping:
      a. Modify procedures for disinfection of stainless steel piping and appurtenances as necessary to avoid causing corrosion, pitting, or attack of stainless steel materials.
         1) Take steps to eliminate chlorinated water trapped in crevices and under gaskets through the following procedures:
            a) Pressurize stainless steel piping systems so that all gaskets and O-rings are seated before introducing chlorinated water into the system.
            b) Flush to displace a minimum of 3 pipe volumes at the conclusion of the disinfection procedure.
            c) Use the continuous-feed method to fill the stainless steel piping system with the minimum chlorine concentration required to

provide a 10 milligrams per liter residual after 24 hours of contact time in accordance with AWWA C651.

3.04 DISINFECTION OF WATER TANKS

A. Perform disinfection of MF and RO feed tanks and product water tanks in accordance with AWWA C652 and as specified in this Section.

B. Test for disinfectant residual at locations as specified in Disinfection Test Plan:
   1. Inlet and outlet piping.
   2. Drain line.

C. Maintain disinfectant in system for appropriate 6-hour or 24-hour interval in accordance with AWWA C652.

D. When disinfectant residual is less than 2 parts per million after 24 hours, repeat system treatment.

3.05 REPAIRS OR CONNECTIONS TO EXISTING LINES

A. Clean and sterilize the interior surfaces of new piping, fittings, equipment, and appurtenances to be installed in an existing potable water system or connected to an existing system.

B. Clean and sterilize the existing pipe or facilities for a minimum distance of 3 pipe diameters back from the ends of the pipe. Plug the ends of the line when work is not being performed on the pipe.

C. Perform sterilization by swabbing each item with a concentrated chlorine solution.
   1. Each piece is to be disinfected prior to being assembled for installation in the existing pipe.
   2. Disinfect each piece just prior to assembly to help prevent recontamination.
   3. Plug the ends of the assembly until a new item is to be added to the assembly.
   4. Store disinfected materials on blocks to prevent contact with the ground.

3.06 FLUSHING

A. Remove disinfection water from the facilities as appropriate for the type of disinfectant and method used for disinfection.

B. Flush facilities with potable water containing no more disinfectant residual than the active distribution system or 1.0 milligrams per liter, whichever is greater (as appropriate for method of chlorination).

C. Continue flushing until water at designated flushing ports contains disinfectant residual equal to concentration specified above.

3.07 DISPOSAL OF CHLORINATED WATER

A. Chlorinated water used for disinfection shall be dechlorinated and disposed per requirements in 306-8.9.4.5 of 2021 Greenbook.

3.08 BACTERIOLOGICAL TEST

A. Instruct bacteriological laboratory to collect water samples no sooner than 24 hours after start of disinfection of each facility.

B. A minimum of 24 hours after flushing system and within 24 hours before the water main is placed in service, collect bacteriological quality samples at each of following locations and other locations in accordance with the submitted disinfection test plan and Standard Methods for the Examination of Water and Wastewater:
   1. Where water enters system.
   2. Inlet piping.
   3. Ends of piping runs.
   4. Drain lines.
   5. Remote outlets.
   6. Tanks.
   7. At least 2 outlets on each building floor.

C. Analyze water samples in accordance with Standard Methods for Examination of Water and Wastewater.

D. When bacteriological test proves water quality to be unacceptable, repeat disinfection treatment process until water meets quality standards for disinfection.

END OF SECTION

SECTION 01 77 00
CLOSEOUT PROCEDURES

PART 1 GENERAL

1.01 SUBMITTALS

A. Informational Submittals:
   1. Submit prior to application for final payment.
      a. Record Documents: As described in Section 01 33 00 SUBMITTAL REQUIREMENTS and as required in General Conditions.
      b. Approved Shop Drawings and Samples: As described in Section 01 33 00 SUBMITTAL REQUIREMENTS, Special bonds, Special Guarantees, and Service Agreements and as required in General Conditions.
      c. Consent of Surety to Final Payment: As required in General Conditions.
      d. Releases or Waivers of Liens and Claims: As required in General Conditions.
      e. Releases from Agreements.
      f. All documentation as required by all Funding Agencies.
      g. Final Application for Payment: Submit in accordance with procedures, requirements stated in Section 01 29 00 PAYMENT PROCEDURES and requirements stated in the General Conditions.
      h. Extra Materials: As required by individual specification sections.

1.02 RECORD DOCUMENTS

A. Quality Assurance:
   1. Furnish qualified and experienced person, whose duty and responsibility shall be to maintain record documents and to ensure compliance with the requirements of the Contract Documents and Funding Agencies.
   2. Accuracy of Records:
      a. Coordinate changes within record documents, making legible and accurate entries on each sheet of Drawings and other documents where such entry is required to show change.
      b. Purpose of Project record documents is to document factual information regarding aspects of the Work, both concealed and visible, to enable future modification of the Work to proceed without lengthy and expensive Site measurement, investigation, and examination.
   3. Make entries within 24 hours after receipt of information that a change in the Work has occurred.
   4. Prior to submitting each request for progress payment, request Construction Manager's review and approval of current status of record documents. Failure to properly maintain, update, and submit record documents may result in a deferral by Construction Manager to recommend whole or any part of Contractor's Application for Payment, either partial or final.

1.03 RELEASES FROM AGREEMENTS (NOT USED)

PART 2 PRODUCTS (NOT USED)

PART 3 EXECUTION

3.01 MAINTENANCE OF RECORD DOCUMENTS

A. General:
   1. Promptly following commencement of Contract Times, secure from Construction Manager at no cost to Contractor, one complete set of Contract Documents. Drawings will be full size.
   2. Label or stamp each record document with title, “RECORD DOCUMENTS,” in neat large, printed letters.
   3. Record information concurrently with construction progress and within 24 hours after receipt of information that change has occurred. Do not cover or conceal Work until required information is recorded.

B. Preservation:
   1. Maintain documents in a clean, dry, legible condition and in good order. Do not use record documents for construction purposes.
   2. Make documents and Samples available at all times for observation by Construction Manager.

C. Making Entries on Drawings:
   1. Clearly describe change by graphic line and note as required. Entries shall be adequately clear to accurately locate and indicate changes on Drawings. Entries shall be dark enough to allow scanned copies.
      a. Color Coding:
         1) Green when showing information deleted from Drawings.
         2) Red when showing information added to Drawings.
         3) Blue and circled in blue to show notes.
   2. Date entries.
   3. Call attention to entry by “cloud” drawn around area or areas affected.
   4. Legibly mark to record actual changes made during construction, including, but not limited to:
      a. Depths of various elements of foundation in relation to finished first floor data if not shown or where depth differs from that shown.
      b. Horizontal and vertical locations of existing and new Underground Facilities and appurtenances, and other underground structures, equipment, or Work. Horizontal and vertical locations of utilities placed at locations different than the coordinates shown on Drawings shall be

surveyed, with revised coordinates to two decimal places, marked on Record Documents. Reference to at least two measurements to permanent surface improvements.

c. Location of internal utilities and appurtenances concealed in the construction referenced to visible and accessible features of the structure.

d. Locate existing facilities, piping, equipment, and items critical to the interface between existing physical conditions or construction and new construction.

e. Changes made by Addenda and Field Orders, Work Change Directive, Change Order, and Construction Manager's written interpretation and clarification using consistent symbols for each and showing appropriate document tracking number. Changes shall also be physically annotated on Drawings, in addition to noting the associated change.

5. Dimensions on Schematic Layouts: Show on Record Drawings, by dimension, the centerline of each run of items such as are described in previous subparagraph above.

   a. Clearly identify the item by accurate note such as "cast iron drain," "galv. water," and the like.

   b. Show, by symbol or note, vertical location of item ("under slab," "in ceiling plenum," "exposed," and the like).

   c. Make identification so descriptive that it may be related reliably to Specifications.

3.02 FINAL CLEANING

A. At completion of the Work or of a part thereof and immediately prior to Contractor's request for certificate of Substantial Completion; or if no certificate is issued, immediately prior to Contractor's notice of completion, clean entire Site or parts thereof, as applicable.

1. Leave the Work and adjacent areas affected in a cleaned condition satisfactory to Owner and Construction Manager.
2. Remove grease, dirt, dust, paint or plaster splatter, stains, labels, fingerprints, and other foreign materials from exposed surfaces.
3. Repair, patch, and touch up marred surfaces to specified finish and match adjacent surfaces.
4. Clean all windows.
5. Clean and wax wood, vinyl, or painted floors.
6. Broom clean exterior paved driveways and parking areas.
7. Hose clean sidewalks, loading areas, and others contiguous with principal structures.
8. Rake clean all other surfaces.
9. Remove snow and ice from access to buildings.

10. Replace air-handling filters and clean ducts, blowers, and coils of ventilation units operated during construction.
11. Leave water courses, gutters, and ditches open and clean.

B. Use only cleaning materials recommended by manufacturer of surfaces to be cleaned.

3.03 SUBSTANTIAL COMPLETION

A. When Contractor considers the entire Work ready for its intended use Contractor shall notify Owner and Construction Manager in writing that the entire Work is substantially complete (except for items specifically listed by Contractor as incomplete) and request that Construction Manager issue a certificate of Substantial Completion.

B. Promptly after Contractor's notification, Owner, Contractor, and Construction Manager shall make an inspection of the Work to determine the status of completion. If Construction Manager does not consider the Work substantially complete, Construction Manager will notify Contractor in writing giving the reasons therefor.

C. If Construction Manager considers the Work substantially complete, Construction Manager will deliver to Owner a tentative certificate of Substantial Completion which shall fix the date of Substantial Completion. There shall be attached to the certificate a tentative list of items to be completed or corrected before final payment. Owner shall have seven days after receipt of the tentative certificate during which to make written objection to Construction Manager as to any provisions of the certificate or attached list. If, after considering such objections, Construction Manager concludes that the Work is not substantially complete, Construction Manager will within 14 days after submission of the tentative certificate to Owner notify Contractor in writing, stating the reasons therefor. If, after consideration of Owner's objections, Construction Manager considers the Work substantially complete, Construction Manager will within said 14 days execute and deliver to Owner and Contractor a definitive certificate of Substantial Completion (with a revised tentative list of items to be completed or corrected) reflecting such changes from the tentative certificate as Construction Manager believes justified after consideration of any objections from Owner.

D. At the time of delivery of the tentative certificate of Substantial Completion, Construction Manager will deliver to Owner and Contractor a written recommendation as to division of responsibilities pending final payment between Owner and Contractor with respect to security, operation, safety, and protection of the Work, maintenance, heat, utilities, insurance, and warranties and guarantees. Unless Owner and Contractor agree otherwise in writing and so inform Construction Manager in writing prior to Construction Manager's issuing the definitive certificate of Substantial Completion, Construction Manager's aforesaid recommendation will be binding on Owner and Contractor until final payment.

3.04 FINAL INSPECTION

A. Upon written notice from Contractor that the entire Work or an agreed portion thereof is complete, Construction Manager will promptly make a final inspection with Owner and Contractor and will notify Contractor in writing of all particulars in which this inspection reveals that the Work is incomplete or defective. Contractor shall immediately take such measures as are necessary to complete such Work or remedy such deficiencies.

END OF SECTION

THIS PAGE INTENTIONALLY LEFT BLANK

SECTION 01 78 23
OPERATION AND MAINTENANCE DATA

PART 1 GENERAL

1.01 SECTION INCLUDES

A. Detailed information for the preparation, submission, and Engineer's review of Operations and Maintenance (O&M) Data, as required by individual specification sections.

1.02 DEFINITIONS

A. Preliminary Data: Initial and subsequent submissions for Engineer's review.

B. Final Data: Engineer-accepted data, submitted as specified herein.

C. Maintenance Operation: As used on Maintenance Summary Form is defined to mean any routine operation required to ensure satisfactory performance and longevity of equipment. Examples of typical maintenance operations are lubrication, belt tensioning, adjustment of pump packing glands, and routine adjustments.

1.03 SEQUENCING AND SCHEDULING

A. Equipment and System Data:

1. Preliminary Data:

a. Do not submit until Shop Drawing for equipment or system has been reviewed and approved by Engineer.

b. Submit prior to shipment date.

2. Final Data: Submit Instructional Manual Formatted data not less than 30 days prior to equipment or system field functional testing.

3. Record Data: Submit final Compilation Formatted and Electronic Media Formatted data prior to Substantial Completion of Project.

B. Materials and Finishes Data:

1. Preliminary Data: Submit at least 15 days prior to request for final inspection**.**

2. Final Data: Submit within 10 days after final inspection.

1.04 DATA FORMAT

A. Prepare preliminary data in the form of an instructional manual. Prepare final data in data compilation format and on electronic media.

B. Instructional Manual Format:

1. Binder: Commercial quality, permanent, three-ring or three-post binders with durable plastic cover.

2. Size: 8-1/2 inches by 11 inches, minimum.

3. Cover:

   a. Identify manual with typed or printed title “OPERATION AND MAINTENANCE DATA” and list:

      1) Project title.

      2) Include name of piece of equipment and equipment tag number.

      3) Designate applicable system, equipment, material, or finish.

      4) Identity of separate structure as applicable.

      5) Identify volume number if more than one volume.

      6) Identity of general subject matter covered in manual. Identity of equipment number and Specification section.

4. Spine:

   a. Project title.

   b. Identify volume number if more than one volume.

5. Title Page:

   a. Contractor name, address, and telephone number.

   b. Subcontractor, Supplier, installer, or maintenance contractor’s name, address, email address and telephone number, as appropriate.

      1) Identify area of responsibility of each.

      2) Provide name and telephone number of local sources of supply for parts and replacement.

6. Table of Contents:

   a. Neatly typewritten and arranged in systematic order with consecutive page numbers.

   b. Identify each product-by-product name and other identifying numbers or symbols as set forth in Contract Documents.

7. Paper: 20-pound minimum, white for typed pages.

8. Text: Manufacturer's printed data, or neatly typewritten.

9. Three-hole punch data for binding and composition; arrange printing so that punched holes do not obliterate data.

10. Material shall be suitable for reproduction, with quality equal to original. Photocopying of material will be acceptable, except for material containing photographs. FAX and thermal copies are not acceptable.

C. Data Compilation Format:

1. Compile all Design Engineer-accepted preliminary O&M data into a hard-copy, hard-bound set.

2. Each set shall consist of the following:

a. Binder: Commercial quality, permanent, three-ring or three-post binders with durable plastic cover.

b. Cover: Identify each volume with typed or printed title "OPERATION AND MAINTENANCE DATA, VOLUME NO. ___ OF ___", and list:

1) Project title.

2) Contractor's name, address, and telephone number.

3) If entire volume covers equipment or system provided by one Supplier include the following:

a) Identity of general subject matter covered in manual.

b) Identity of equipment number and Specification section.

c. Provide each volume with title page and typed table of contents with consecutive page numbers. Place contents of entire set, identified by volume number, in each binder.

d. Table of contents neatly typewritten, arranged in a systematic order:

1) Include list of each product, indexed to content of each volume.

2) Designate system or equipment for which it is intended.

3) Identify each product-by-product name and other identifying numbers or symbols as set forth in Contract Documents.

e. Section Dividers:

1) Heavy, 80-pound cover weight, tabbed with numbered plastic index tabs.

2) Divider Page:

a) For each separate product, or each piece of operating equipment, with typed description of product and major component parts of equipment.

b) List with Each Product:

(1) Name, address, and telephone number of Subcontractor, Supplier, installer, and maintenance contractor, as appropriate.

(2) Identify area of responsibility of each.

(3) Provide local source of supply for parts and replacement.

c) Identity of separate structure as applicable.

f. Assemble and bind material, as much as possible, in same order as specified in the Contract Documents.

D. Electronic Media Format:

1. Portable Document Format (PDF):

a. After all preliminary data has been found to be acceptable to Design Engineer, submit Operation and Maintenance data in PDF format on DVD, flash drive or through on-line transfer. Minimize the number of files in each manual. Files should not be broken up unless the size is greater than 1 GB.

b. Files to be exact duplicates of Design Engineer-accepted preliminary data. Arrange by specification number and name.

c. Files to be processed for optical character recognition, bookmarked, and viewable in most recent version of Adobe Acrobat.

d. Document properties requirements of each file shall be set as follows:

1) Title: Name of the system

2) Author: Manufacturer's name

3) Subject: Equipment Service Manual

4) Keywords: Equipment Tag Number, equipment type

5) Initial View – Navigation Tab: Bookmarks Panel and Page

6) Layout: Single Page

7) Magnification: Fit Page

8) Window Option: Show document title

9) Security: No security

1.05 SUBMITTALS

A. Informational:

1. Data Outline: Submit three copies and electronic copies of a detailed outline of proposed organization and contents of Final Data prior to preparation of Preliminary Data.

2. Preliminary Data:

a. Submit three copies and electronic copies for Design Engineer's review.

b. If data meets conditions of the Contract: Design Engineer will accept manual.

1) One copy will be returned to Contractor.

2) One copy will be forwarded to Resident Project Representative.

3) One copy will be retained in Engineer's file.

4)

c. If data does not meet conditions of the Contract: Resubmit **manual** revised in accordance with Design Engineer's comments.

1) All copies will be returned to Contractor with Engineer's comments (on separate document) for revision.

2) Engineer's comments will be retained in Engineer's file.

3) Resubmit two copies revised in accordance with Engineer's comments.

4)

3. Final Data: Submit two printed copies and an electronic copy in format specified herein.

4. Record data: Submit two printed copies and an electronic copy in format specified herein, incorporating all modifications made during testing and commissioning.

1.06 DATA FOR EQUIPMENT AND SYSTEMS

A. Content for Each Unit (or Common Units) and System:

1. Product Data:
    a. Include only those sheets that are pertinent to specific product.
    b. Clearly annotate each sheet to:
        1) Identify specific product or part installed.
        2) Identify data applicable to installation.
        3) Delete references to inapplicable information.
    c. Function, normal operating characteristics, and limiting conditions.
    d. Performance curves, engineering data, nameplate data, and tests.
    e. Complete nomenclature and commercial number of replaceable parts.
    f. Original manufacturer's parts list, illustrations, detailed assembly drawings showing each part with part numbers and sequentially numbered parts list, and diagrams required for maintenance.
    g. Spare parts ordering instructions.
    h. Where applicable, identify installed spares and other provisions for future work (e.g., reserved panel space, unused components, wiring, terminals).
2. As-installed, color-coded piping diagrams.
3. Charts of valve tag numbers, with the location and function of each valve.
4. Drawings: Supplement product data with Drawings as necessary to clearly illustrate:
    a. Format:
        1) Provide reinforced, punched, binder tab; bind in with text.
        2) Reduced to 8-1/2 inches by 11 inches, or 11 inches by 17 inches folded to 8-1/2 inches by 11 inches.
        3) Where reduction is impractical, fold and place in 8-1/2-inch by 11-inch envelopes bound in text.
        4) Identify Specification section and product on Drawings and envelopes.
    b. Relations of component parts of equipment and systems.
    c. As-built control and flow diagrams.

d. Coordinate drawings with Project record documents to assure correct illustration of completed installation.

5. Instructions and Procedures: Within text, as required to supplement product data.

   a. Format:

      1) Organize in consistent format under separate heading for each different procedure.

      2) Provide logical sequence of instructions for each procedure.

      3) Provide information sheet for Owner's personnel, including:

         a) Proper procedures in event of failure.

         b) Instances that might affect validity of guarantee or Bond.

   b. Installation Instructions: Including alignment, adjusting, calibrating, and checking.

   c. Operating Procedures:

      1) Startup, break-in, routine, and normal operating instructions.

      2) Test procedures and results of factory tests where required.

      3) Regulation, control, stopping, and emergency instructions.

      4) Description of operation sequence by control manufacturer.

      5) Shutdown instructions for both short and extended duration.

      6) Summer and winter operating instructions, as applicable.

      7) Safety precautions.

      8) Special operating instructions.

   d. Maintenance and Overhaul Procedures:

      1) Routine maintenance.

      2) Guide to troubleshooting.

      3) Disassembly, removal, repair, reinstallation, and re-assembly.

6. Guarantee, Bond, and Service Agreement: In accordance with Section 01 77 00, Closeout Procedures.

B. Content for Each Electric or Electronic Item or System:

1. Description of Unit and Component Parts:

    a. Function, normal operating characteristics, and limiting conditions.

    b. Performance curves, engineering data, nameplate data, and tests.

    c. Complete nomenclature and commercial number of replaceable parts.

    d. Interconnection wiring diagrams, including control and lighting systems.

2. Circuit directories of panelboards:

3. Electrical service.

4. Control requirements and interfaces.

5. Communication requirements and interfaces.

6. List of electrical relay settings, and control and alarm contact settings.

7. Electrical interconnection wiring diagram, including as applicable, single-line, three-line, schematic and internal wiring, and external interconnection wiring.

8. As-installed control diagrams by control manufacturer.

9. Operating Procedures:

    a. Routine and normal operating instructions.

    b. Startup and shutdown sequences, normal and emergency.

    c. Safety precautions.

    d. Special operating instructions.

10. Maintenance Procedures:

    a. Routine maintenance.

    b. Guide to troubleshooting.

    c. Adjustment and checking.

    d. List of relay settings, control and alarm contact settings.

11. Manufacturer's printed operating and maintenance instructions.

12. List of original manufacturer's spare parts, manufacturer's current prices, and recommended quantities to be maintained in storage.

C. Maintenance Summary:

1. Compile individual Maintenance Summary for each applicable equipment item, respective unit or system, and for components or sub-units.

2. Format:

a. Use Maintenance Summary Form bound with this section or electronic facsimile of such.

b. Each Maintenance Summary may take as many pages as required.

c. Use only 8-1/2-inch by 11-inch size paper.

d. Complete using typewriter or electronic printing.

e. Provide in electronic media format.

3. Include detailed lubrication instructions and diagrams showing points to be greased or oiled; recommend type, grade, and temperature range of lubricants and frequency of lubrication.

4. Recommended Spare Parts:

a. Data to be consistent with manufacturer's Bill of Materials/Parts List furnished in O&M manuals.

b. "Unit" is the unit of measure for ordering the part.

c. "Quantity" is the number of units recommended.

d. "Unit Cost" is the current purchase price.

1.07 DATA FOR MATERIALS AND FINISHES

A. Content for Architectural Products, Applied Materials, and Finishes:

1. Manufacturer's data, giving full information on products:

a. Catalog number, size, and composition.

b. Color and texture designations.

c. Information required for reordering special-manufactured products.

2. Instructions for Care and Maintenance:

a. Manufacturer's recommendation for types of cleaning agents and methods.

b. Cautions against cleaning agents and methods that are detrimental to product.

c. Recommended schedule for cleaning and maintenance.

B. Content for Moisture Protection and Weather Exposed Products:

1. Manufacturer's data, giving full information on products:

a. Applicable standards.

b. Chemical composition.

c. Details of installation.

2. Instructions for inspection, maintenance, and repair.

1.08 SUPPLEMENT

A. The supplement listed below, following "End of Section", is part of this Specification.

1. Maintenance Summary Form.

PART 2 PRODUCTS (NOT USED)

PART 3 EXECUTION (NOT USED)

END OF SECTION

MAINTENANCE SUMMARY FORM

PROJECT:_____ CONTRACT NO.:_____

1. EQUIPMENT ITEM_____

2. MANUFACTURER _____

a. Website: _____

3. EQUIPMENT/TAG NUMBER(S) _____

4. WEIGHT OF INDIVIDUAL COMPONENTS (OVER 100 POUNDS)_____

5. NAMEPLATE DATA (hp, voltage, speed, etc.) _____

6. MANUFACTURER'S LOCAL REPRESENTATIVE _____

a. Name. _____

b. Telephone No. _____

c. Address. _____

d. Email. _____

7. MAINTENANCE REQUIREMENTS

Maintenance Operation Comments	Frequency	Lubricant (If Applicable)
List briefly each maintenance operation required and refer to specific information in manufacturer's standard maintenance manual, if applicable. (Reference to manufacturer's catalog or sales literature is not acceptable).	List required frequency of each maintenance operation.	Refer by symbol to lubricant required.

8. LUBRICANT LIST

Reference Symbol	Shell	Exxon Mobile	Chevron Texaco	BP Amoco	Or Equal
List symbols used in No. 7 above.	List equivalent lubricants, as distributed by each manufacturer for the specific use recommended.				

9. RECOMMENDED SPARE PARTS FOR OWNER'S INVENTORY.

Part No.	Description	Unit	Quantity	Unit Cost
Note: Identify parts provided by this Contract with two asterisks.				

SECTION 01 88 15
ANCHORAGE AND BRACING

PART 1 GENERAL

1.01 SUMMARY

A. This section covers requirements for anchorage and bracing of equipment, distribution systems, and other nonstructural components required in accordance with the 2019 California Building Code (CBC), for seismic, wind, gravity, soil, and operational loads.

1.02 REFERENCES

A. The following is a list of standards which may be referenced in this section:
   1. American Institute of Steel Construction (AISC) 360, Specification for Structural Steel Buildings.
   2. American Society of Civil Engineers (ASCE): ASCE 7-16, Minimum Design Loads for Buildings and Other Structures.
   3. California Building Commission: 2019 CBC
   4. International Code Council (ICC): International Building Code (IBC).

1.03 DEFINITIONS

A. Authority Having Jurisdiction (AHJ): Permitting building agency; may be a federal, state, local, or other regional department, or individual including building official, fire chief, fire marshal, chief of a fire prevention bureau, labor department, or health department, electrical inspector; or others having statutory authority. AHJ may be Owner when authorized to be self-permitting by governmental permitting agency or when no governmental agency has authority.

1.04 DESIGN AND PERFORMANCE REQUIREMENTS

A. General:
   1. Contractor shall be responsible for designing code required gravity, wind and seismic supports, attachments, braces, and anchors to the structure including concrete pads and foundations for elements of the architectural, mechanical, and electrical systems included in the Work in accordance with this section unless a design is specifically provided within the Contract Documents.
   2. Anchorage and bracing systems shall be designed by a qualified professional civil or structural engineer registered in the State of California**.**
   3. Design anchorage and bracing of architectural, mechanical, and electrical components and systems in accordance with this section, unless a design is specifically provided within Contract Documents or where exempted hereinafter.
   4. Design attachments, braces, and anchors for equipment, components, and distribution systems to structure for gravity, seismic, wind, and operational loading.

5. Design seismic anchorage and bracing for modified existing architectural, mechanical, or electrical systems where code requirements would dictate design for similar new components.
6. Anchor and brace piping and ductwork, whether exempt or not exempt for this section, so that lateral or vertical displacement does not result in damage or failure to essential architectural, mechanical, or electrical equipment.
7. Architectural Components: Includes, but are not limited to, nonstructural walls and elements.
8. Provide supplementary framing where required to transfer anchorage and bracing loads to structure.
9. Adjust equipment pad sizes or provide additional anchorage confinement reinforcing to provide required anchorage capacities.
10. Design anchorage and bracing in Areas 1-5 and pipe coils in Area 6 per Chapter 13 of ASCE 7-16. Provide anchorage and bracing calculations for:
    a. Equipment and components that weigh more than 400 pounds.
    b. Equipment and components that have center of mass located more than 4 feet above adjacent finished floor except items weighing 20 pounds or less or distributed systems weighing 5 pounds or less.
    c. Components without flexible connections between component and associated ductwork, piping and conduit.
    d. All components with I_p>1.
    e. See exceptions for distribution systems in Seismic Design Category – for conduit, cable tray and raceways (ASCE 7-16 Section 13.6.5), duct systems (ASCE 7-16 Section 13.6.6) and piping and tubing systems (ASCE 7-16 Section 13.6.7.3.
11. Design anchorage and bracing for electrical enclosure in Area 6 per the provisions for nonbuilding structures similar to buildings in ASCE 7-16 Chapter 15. Nonstructural components within electrical enclosure to be designed per ASCE 7-16 Chapter 13.
12. Design anchorage and bracing for components in Areas 7 and 8 per ASCE 7-16 Section 15.3.1 for nonbuilding structures supported by other structures.
    a. Design seismic forces for components (nonbuilding structures) shall be determined in accordance with ASCE 7-16 Chapter 13 where R_p and a_p are per Section 13.1.6.
    b. Supporting structure has been designed per ASCE 7-16 Chapter 12.
13. For components exempted from design requirements of this section, provide bolted, welded, or otherwise positively fastened attachments to supporting structure.

B. Design Loads:
1. Gravity: Design anchorage and bracing for self-weight and superimposed loads on components and equipment.
2. Wind: Design anchorage and bracing for wind criteria provided in Section 01 61 00 COMMON PRODUCT REQUIREMENTS. and on General Structural Notes on Drawings for architectural components and exterior and wind-exposed mechanical and electrical equipment. Alternately, manufacturer

certification may be provided for components such as roofing and flashing to verify attachments meet Project-specific design criteria.

3. Operational:
   a. For loading supplied by equipment manufacturer for CBC required load cases.
   b. Loads may include equipment vibration, torque, thermal effects, effects of internal contents (weight and sloshing), water hammer, and other load-inducing conditions.
   c. Locate braces to minimize vibration to or movement of structure.
   d. For vibrating loads, use anchors meeting requirements of Section 05 50 00, METAL FABRICATIONS, for anchors with designated capacities for vibratory loading per manufacturer's ICC-ES report.
4. Hydraulic: Design of anchorage for submerged gates and other mechanical equipment shall include hydrostatic and hydrodynamic loads determined in accordance with Section 15.7 of ASCE 7 16.
5. Seismic:
   a. In accordance with 2019 CBC, Section 1613, and Chapter 13 of ASCE 7-16.
   b. Design anchorage and bracing for design criteria listed on General Structural Notes on Drawings.
   c. Design forces for anchors in concrete or masonry shall be in accordance with ASCE 7, Section 13.4.2.

C. Seismic Design Requirements:
1. The following are exempt from requirements for provision of seismic anchorages and bracing, in addition to those items specifically exempted in ASCE 7, Part 13. 6 for electrical and mechanical equipment:
   a. Temporary or movable equipment.
2. Fire protection sprinkler systems designed and constructed in accordance with NFPA 13 shall be considered to meet requirements of Chapter 13 of ASCE 7.
3. Provide support drawings and calculations for electrical distribution components if any of the following conditions apply:
   a. Conduit diameter is greater than 2.5-inch trade size unless flexible connections are provided.
   b. Exceptions of ASCE 7-16 Section 13.6.5 are not met.
4. Existing components, systems, and equipment in their final condition that are modified by Project requirements and are not exempted by above paragraph require the same anchorage and bracing drawing and calculation submittals as new equipment. Field verify existing conditions.
5. Other seismic design and detailing information identified in ASCE 7, Chapter 13, is required to be provided for new and modified or noted architectural, mechanical and electrical components, systems, or equipment.

1.05 SUBMITTALS

A. Action Submittals:

1. Shop Drawings (each Area to be a separate Submittal):
   a. List of mechanical and electrical equipment requiring Contractor-designed anchorage and bracing, unless specifically exempted.
   b. Manufacturers engineered seismic and non-seismic hardware product data sealed by a civil or structural engineer registered in the State of California.
   c. Attachment assemblies' drawings including seismic attachments; include connection hardware, braces, and anchors or anchor bolts for nonexempt components, equipment, and systems.
   d. List of existing mechanical, and electrical equipment or components to be modified in Project requiring Contractor-designed anchorage and bracing in final retrofitted condition.
   e. Drawings for seismic attachment assemblies include connection hardware, braces, and anchors (or anchor bolts) for modified, nonexempt existing components, equipment, and systems where a combination of new and existing systems or components' final condition would require anchorage or bracing under this Specification for new equipment.
   f. Submittal will be rejected if proposed anchorage method would create excessive stress to supporting member. Revise anchorages and strengthen structural support to eliminate overstressed condition.

B. Informational Submittals (each Area required to be a separate Submittal):
   1. Anchorage and Bracing Calculations: For attachments, braces, and anchorages, include CBC and Project-specific criteria as noted on General Structural Notes on Drawings, in addition to manufacturer's specific criteria used for design; sealed by a civil or structural engineer registered in the State of California.
   2. Manufacturer's hardware installation requirements.

C. Deferred Submittals:
   1. Submit deferred Action Submittals such as Shop Drawings with supporting deferred informational submittals such as calculations no less than 8-weeks in advance of installation of component, equipment or distribution system to be anchored to structure.

1.06 SOURCE QUALITY CONTROL

A. Provide all other specified, regulatory required, or required repair verification inspection and testing that is not listed in Statement of Special Inspections in accordance with Section 01 45 16.13 CONTRACTOR QUALITY CONTROL.

B. Provide Source Quality Control for welding and hot-dip galvanizing of anchors in accordance with Section 05 50 00 METAL FABRICATIONS.

C. Contractor and supplier responsibilities to accommodate Owner-furnished shop fabrication related special inspections and testing are provided in Project's Statement of Special Inspections on Drawings, and Section 01 45 33 SPECIAL INSPECTION, OBSERVATION, AND TESTING.

PART 2 PRODUCTS

2.01 GENERAL

A. Design and construct attachments and supports transferring seismic and non-seismic loads to structure of materials and products suitable for application and in accordance with design criteria shown on Drawings and nationally recognized standards.

B. Provide anchor bolts for anchorage of equipment to concrete in accordance with Section 05 50 00 METAL FABRICATIONS. Provide anchor bolts of the size, minimum embedment, and spacing designated in calculations submitted by Contractor and accepted by the Engineer.

C. Provide post-installed concrete anchors for anchorage of equipment to concrete in accordance with manufacturer's recommendations. Provide post-installed anchors of the type, size, minimum embedment, and spacing designated in calculations submitted by Contractor and accepted by the Engineer.

D. Do not use powder-actuated fasteners or sleeve anchors for seismic attachments and anchorage where resistance to tension loads is required. Do not use expansion anchors, other than undercut anchors, for non-vibration isolated mechanical equipment rated over 10 HP.

PART 3 EXECUTION

3.01 GENERAL

A. Make attachments, bracing, and anchorage in such a manner that component lateral force is transferred to lateral force-resisting system of structure through a complete load path.

B. Design, provide, and install overall seismic anchorage system to provide restraint in all directions, including vertical, for each component or system so anchored.

C. Provide snubbers in each horizontal direction and vertical restraints for components mounted on vibration isolation systems where required to resist overturning.

D. Provide piping anchorage that maintains design flexibility and expansion capabilities at flexible connections and expansion joints.

E. Anchor tall and narrow equipment such as motor control centers and telemetry equipment at base and within 12 inches from top of equipment, unless approved otherwise by Design Engineer.

F. Do not attach mechanical, or electrical components to more than one element of a structure at a single restraint location where such elements may respond differently during a seismic event.

3.02 INSTALLATION

A. Do not install components or their anchorages or restraints prior to review and acceptance by Design Engineer and AHJ.

B. Notify Construction Manager upon completion of installation of seismic restraints in accordance with Section 01 45 33 SPECIAL INSPECTION, OBSERVATION, AND TESTING.

3.03 FIELD QUALITY ASSURANCE AND QUALITY CONTROL

A. In accordance with Section 05 50 00 METAL FABRICATIONS.

B. Owner-Furnished Quality Assurance, in accordance with CBC Chapter 17 requirements, is provided in Statement of Special Inspections Plan on Drawings**.** Contractor responsibilities and related information are included in Section 01 45 33 SPECIAL INSPECTION, OBSERVATION, AND TESTING.

C. Provide any other specified, regulatory required, or required repair verification inspection and testing that is not listed in Statement of Special Inspections.

END OF SECTION

SECTION 01 91 13

GENERAL COMMISSIONING REQUIREMENTS

PART 1 GENERAL

1.01 RELATED DOCUMENTS

A. Drawings and general provisions of the Contract, including General and Supplementary Conditions, Submittals, and other Division 1 Specification Sections, apply to this Section.

1.02 SUMMARY

A. Section covers Facility Commissioning and includes:
   1. Facility Commissioning Team.
   2. Facility Commissioning Meetings.
   3. Construction Checklist Overview.
   4. Controls Verification.
   5. Functional Performance Testing.
   6. Training Development.
   7. Facility Commissioning Plan.

B. Related Sections:
   1. Closeout Procedures: Divisions 1
   2. Commissioning of Electrical Systems: Section 26 08 00 COMMISSIONING OF ELECTRICAL SYSTEMS
   3. All applicable provisions of the remaining divisions also apply to this section.

1.03 DEFINITIONS

A. BOD: Basis of Design. A document, prepared by Engineer, that records concepts, calculations, decisions, and product selections used to meet the Owner's Project Requirements (OPR) and to satisfy applicable regulatory requirements, standards, and guidelines. The document includes both narrative descriptions and lists of individual items that support the design process.

B. Commissioning Plan: A document, prepared by the Contractor that outlines the organization, schedule, allocation of resources, and documentation requirements of the Facility commissioning process.

C. Facility Commissioning Authority (FCA). The Engineer. The FCA assists the Contractor with coordinating facility commissioning activities and witnesses the

activities on behalf of the Owner.

D. OPR: Owner's Project Requirements. A document, prepared by the Engineer that details the functional requirements of a Project and expectations of how it will be used and operated. This document includes Project goals, measurable performance criteria, cost considerations, benchmarks, success criteria, and supporting information.

E. Systems, Assemblies, Equipment, and Components: Where these terms are used together or separately, they shall mean "as-built" systems, assemblies, equipment, and components.

F. Pre-Functional Checklist (PFC): A form used by the commissioning team to verify that appropriate materials and components are on-site, ready for installation, correctly installed, and in compliance with the Owner's Project Requirements

G. Functional Performance Test (FPT): The process of verifying that a material, product, assembly, or system meets defined performance criteria. The methods and conditions under which performance is verified are described in one or more test protocols.

1.04 DESCRIPTION

A. A key component of Commissioning is the verification of the operation of commissioned systems in all modes of operation to ensure the facility is ready for year-round occupancy and intended use.

1.05 SYSTEMS TO BE COMMISSIONED

A. The following systems and their components are the focus of the Commissioning Process due to their complexity and the need to have coordination among the various subcontractors:
   1. Process and Mechanical systems
   2. Electrical Systems, including service, distribution, lighting, and controls, including daylighting controls
   3. Instrumentation and Control systems

PART 2 PRODUCTS (NOT USED)

PART 3 EXECUTION

3.01 COMMISSIONING TEAM

A. The General Contractor and each subcontractor shall designate a single individual to be responsible for coordinating commissioning activities with Owner and FCA.

B. The members of the commissioning team consist of Owner, Contractor, the Mechanical Subcontractors, the Electrical Subcontractor(s) (ES), the other subcontractors, and the Controls Subcontractors (CS).

3.02 RESPONSIBILITIES

A. The Contractor shall provide the FCA with a detailed construction schedule within 30 days of the commencement of work. The Contractor shall also provide the FCA with construction schedule updates throughout the construction period. Schedules shall include all submittals; equipment start-up activities; pipe flushing; Test, and Owner training. The FCA will provide the Contractor with commissioning activities into the overall project schedule.

B. Contractor shall notify FCA 14-days prior to equipment startup, ductwork testing, pipe testing and flushing, water treatment certification, and Authority Having Jurisdiction (AHJ) inspections. All documentation shall be sent to FCA for record.

C. Contractor shall complete pre-functional checklists and installation checklists daily.

D. Contractor shall provide FCA coordinated shop drawings monthly or as requested to verify that all trades are coordinating in a reasonable and logical manner.

E. Contractor shall submit proposed startup procedures for review 14 days prior to startup.

F. Contractor shall submit completed startup reports and completed pre- functional checklists prior to scheduling functional testing.

G. Controls contractor shall submit trending for review to FCA 7 days prior to functional performance testing. Trending duration shall be for 7 days on 30-minute intervals and shall include all points as requested by FCA. Functional testing will not be scheduled prior to FCA and Owner approving trends.

H. FPT (Functional Performance Test) procedures will be developed by the Contractor in coordination with the FCA.

I. Contractor shall be responsible for completing functional performance testing at the end of construction.

3.03 COMMISSIONING MEETINGS

A. All commissioning team members shall attend preconstruction FCA meeting. The meeting will be to discuss the FCA process, scheduled activities, and FCA team responsibilities.

B. Commissioning meetings will be held throughout the duration of construction and will typically follow a scheduled project coordination meeting. Commissioning meetings will be separate from other meetings and will have their own agenda and meeting minutes. The FCA will lead, distribute agendas, and record meeting minutes for FCA meetings. The meetings are not to be redundant to other meetings and will be to discuss quality issues and building commissioning activities.

3.04 FACILITY COMMISSIONING PLAN

A. A detailed commissioning plan containing the OPR, designer's Basis of Design (if available), and a compilation of all test forms will be provided and reviewed with the subcontractors during the pre-construction workshop.

B. The commissioning plan is intended only as a guide for commissioning activities on the project. The specifications are the contract requirements and shall be considered the extent of the subcontractor's responsibilities.

3.05 DOCUMENTATION

A. Contractor shall notify FCA 14-days prior to equipment startup, ductwork testing, pipe testing and flushing, water treatment certification, and AHJ inspections. All documentation shall be sent to FCA for record.

3.06 SUBMITTAL REVIEWS

A. The Engineer and Owner shall review submittals. The intent of this review is to identify long-term issues of submitted equipment and to ensure the original design intent is maintained throughout the design and construction phases.

B. The Contractor shall send submittals to the Construction Manager and FCA. The focus of the review will be:
   1. Verify that the equipment or system meets the Owner's Project Requirements.
   2. Verify that equipment or system includes provisions for access and maintenance.

C. The FCA after the review will return a list of comments to the Contractor.
   1. The FCA will review and return a single comment list to the Contractor.
   2. FCA will send copy of the FCA comments to the Contractor to incorporate.

3.07 CONSTRUCTION CHECKLIST OVERVIEW

A. The intent of the construction checklist is to provide a formalized means to easily track construction progress and to provide individual workers the key criteria for a successful installation.

1. Pre-functional checklists are described in detail below. These are equipment-specific.
2. Checklists for piping, ductwork, cable trays, wiring, etc. are different from the pre-functional checklists. Although they are not formally tracked, they will be used by the FCA during periodic site observations. These checklist items are reminders to the contractors of some common items that have been problematic on other projects.

B. Construction checklists for all pieces of equipment typically follow the same format yet are tailored to the specific equipment being installed.

C. Pre-functional and Construction checklists shall be developed for each individual piece of equipment to track and verify equipment from when they are delivered, installed, and started up. The Contractor is responsible for developing all checklists for each piece of equipment or system and the following:
   1. Instructions and Checklist Procedures.
   2. Checklists with the following sections:
      a. Pre-Installation Checks: Includes several yes/no or short answer questions to document the condition of the equipment prior to installation and several blank columns to compare delivery items such as manufacturer, model, serial no., etc. to the corresponding submitted/approved items.
      b. Installation and Startup: Includes several yes/no or short answer questions to document that the equipment is installed, electrically wired, controlled and started up and balanced according to the specified requirements. A Negative Responses section is included at the end of the checklist to document the reasons for any "no" responses or discrepancies in the various sections. A space is included to document the actions taken to correct the problems resulting in "no" responses.

D. The checklist shall be completed by the individual actually completing the work. Prior to any work, the checklist shall be reviewed by the individual contractor for pertinent information. Any negative responses on the checklist shall be explained and documented at the end of the checklist. The FCA will review each checklist with the respective contractor(s) prior to the installation of the first component of an item (e.g., the first unit heater) to ensure they understand the use of the checklist.

E. All Installation Checklists shall be returned to the supervisor upon completion of the work at the end of each day. The FCA will retrieve completed checklists and retain for documentation, progress will be documented by FCA and distributed to the FCA Team.

F. The completion of the checklist does not eliminate the contractor's responsibility for meeting other requirements in the specifications and drawings.

G. The FCA will periodically verify the accuracy, completeness and tracking of the checklists. If consistent errors are found, the responsible contractor shall re-validate 100 percent of the checklists for the problem equipment or system type.

H. The Checklists are designed to detect and eliminate delivery, installation and startup problems, and problems with miscommunication. This process also serves as a convenient way to document the progress of the work.

3.08 SITE OBSERVATION AND ISSUES LOG

A. The FCA will perform routine site observations during the construction period.

B. The FCA will maintain an Issues Log that will include construction issues, access and maintenance issues, safety issues, or other issues. Each observation is intended to improve the project quality and achieve the OPR.

C. The FCA Issue Logs are not “punch lists” in that they focus on systemic problems. Where an issue is identified, not all of the same components will have been verified by the FCA.

D. Issue Logs shall be responded to within 7 days.

3.09 START-UP

A. Startup reports shall be prepared prior to start-up and submitted to FCA Team for Owner and FCA to review.

B. Startup documentation shall contain a minimum of all startup procedures recommended by manufacturer and shall encompass all accessories and sensor calibration.

C. Completed start-up reports shall be submitted 7-days prior to scheduled functional performance testing. Start-up reports shall be type written on contractor’s letterhead.

3.10 O&M MANUALS

A. The lead subcontractor for the respective system is responsible for the delivery of O&M Manuals and Warranties to the Owner.

B. FCA, Engineer and Owner will review O&M Manuals and Warranties.

C. FCA after the review will return a single comment list to the Contractor.

3.11 CURRENT FACILITIES REQUIREMENTS

A. FCA shall prepare and maintain a current facility requirement (CFR) and operations and maintenance (O&M) plan that contains the information necessary to operate the building efficiently. This information is covered in the OPR, BOD, and functional test scripts, but more information may be taken from specific submittals or equipment operations and maintenance manuals. The plan must include the following:
   1. Sequences of operation for the facility.
   2. Equipment run-time schedules.
   3. Systems narrative describing the mechanical and electrical systems and equipment.
   4. Preventive maintenance plan for equipment described in the systems narrative.
   5. FCA program that includes periodic commissioning requirements, ongoing commissioning tasks, and continuous tasks for critical facilities.

3.12 TRAINING

A. The lead subcontractor for the respective system is responsible for the development of the training material for the system. The lead subcontractor shall utilize the Operations and Maintenance Manual as a basis for instruction. Any coordination of training between different subcontractors is the responsibility of the lead subcontractor.

B. The training agendas and material shall be submitted to the Engineer and the Owner 30 days prior to the originally scheduled system training for review and acceptance for review. The Engineer and the Owner shall provide comments to supplement the training material for operations and maintenance personnel where appropriate. Training Agendas shall include:
   1. Instructor's Name.
   2. Date of training.
   3. Duration.
   4. General purpose of the system.
   5. Use of the O&M manuals.
   6. Review of control drawings and schematics.
   7. Start-up, normal operation, shutdown, unoccupied operation, seasonal changeover, manual operation, controls set-up and programming, troubleshooting, and alarms
   8. Interactions with other systems, adjustments and optimizing methods for energy conservation, relevant health and safety issues

9. Preventative maintenance procedures and schedules. Schedule should be broken out by system and each component requiring maintenance.
10. Special maintenance and replacement sources
11. The trainer shall verify that the training agenda is covered and shall obtain signatures and names of persons attending the training.

C. Owner and Engineer will review training agenda and materials.

D. The Engineer after the review will return a single comment list to the Contractor.

E. Training shall be recorded by the Contractor, as specified in the contract documents, with final 3 copies supplied to Owner in DVD, flash drive or through online transmittal.

F. All training sessions shall be scheduled and coordinated by the General Contractor through Owner.

G. Major component training shall be completed and accepted by Owner prior to substantial completion and occupancy.

3.13 CONTROL SYSTEM VERIFICATION

A. Included in this work will be sample-based verification of instrument calibration, access to components, labeling of devices, clear sequences and shop drawings.

B. The verification of the control system will be accomplished as an on-going task during construction to identify and resolve systemic issues early in the project. This on-going task will involve work that occurs offsite and throughout the construction phase including the closeout phase.

C. The control system operation must be sufficiently operational prior to the commissioning of the system. It is understood that a portion of the final control system startup occurs in conjunction with the commissioning work. The intent of this requirement is for the commissioning work to be productive and not be hampered by a control system that is not sufficiently functional.

D. The control system testing will utilize the control system instrumentation for testing. Therefore, the first portion of the control system testing will be verification of the sensors, inputs and outputs.

E. Point-to-Point Verification: All wiring shall be checked out by the Control Contractor from end to end, point to point, from field to computer screen to ensure correct connection and a system free from wiring defects.

F. FCA verification of sensors will be made using the sampling method; an exhaustive re-test of the control system inputs and outputs will not be conducted by the FCA. Prior to FCA verification, the Control Contractor shall be responsible for complete input/output checkout quality assurance.

1. Sensor and Actuator Calibration, General:
   a. This section is included to emphasize the importance of the Control Contractor calibrating the instrumentation, and to make clear the requirement for same; and that “factory calibration” or “calibration by exception” is not acceptable.
   b. All field-installed instruments, analyzers, , and all actuators (valves) on all equipment shall be calibrated using the methods described below. All test instruments shall have had a certified calibration within the last 12 months. Sensors installed in the unit at the factory with calibration certification provided need not be field calibrated as long as the calibration is still valid.
   c. All procedures used shall be fully documented on the pre- functional checklists or other suitable forms, clearly referencing the procedures followed and written documentation of initial, intermediate and final results.
2. Sensor Calibration Methods:
   a. All Sensors and Transducers. Verify that all sensor and transducer locations are appropriate and away from causes of erratic operation. Verify that sensors and transducers with shielded cable are grounded only at one end.
   b. Sensors without Transmitters. Make a reading with a calibrated test instrument within 6 inches of the site sensor or to be within the specified accuracy level of the instrument. Verify that the sensor is within the specified tolerances. replace sensor.
   c. Sensors with Transmitters. Connect a signal generator. Adjust transmitter zero and span to match the signal generator until the ammeter reads 4 mA. Make a reading with a calibrated test instrument within 6 inches of the site sensor. Verify that the sensor reading is within the specified tolerances. If not, replace sensor and repeat.
   d. Valve and Damper Stroke Setup and Check as follows:
      1) For all valve and damper actuator positions checked, verify the actual position against the control system readout.
      2) Set pumps or fans to normal operating mode (If the system could be affected by this, then shut down the system). Command valve or damper closed, visually verify that valve or damper is closed and adjust output zero signal as required. Command valve or damper open, verify position is full open and adjust output signal as required. Command valve or damper to a few intermediate positions. If actual valve or damper position doesn’t reasonably correspond, replace actuator.

3) Closure for normally closed valves and dampers (spring- loaded only). Disconnect power to the actuator motor, and verify the valve or damper moves to full closed position. If not spring-loaded, conduct verification by disconnecting the signal wire. Restore to normal.
4) Closure for normally open valves and dampers (spring- loaded only). Disconnect power to the actuator motor, and verify the valve or damper moves to full open position. If not spring-loaded, conduct verification by disconnecting the signal wire. Restore to normal.

3.14 FUNCTIONAL PERFORMANCE TESTING

A. The FCA will witness tests performed by the Contractor/subcontractors that are intended to document achievement of the OPR. The specific activities expected include:
   1. The FCA will provide to all commissioning team members, and others as required, the functional performance test plan prior to scheduled testing.
   2. Review of test procedures: the contractor/subcontractors shall review the FPT procedures developed by the FCA. The contractor shall return consolidated comments from all subcontractors within 14 days of receipt from the FCA.
   3. FPT's shall be accomplished prior to submitting the initial request for substantial completion and after all construction checklists have been accepted by the FCA and after acceptance of all startup and performance test reports by the FCA.
   4. Contractor shall assign adequate personnel and tools for the following FPT's and any required retests:
      a. Process equipment and systems – all modes of operation, including emergency, efficiency, performance, and consistency tests.
      b. Electrical – Review of equipment electrical connections to validate power quality within specified tolerances in all modes of operation, including emergency, efficiency, performance, and consistency tests. Review lighting control systems in all modes of operation.
      c. Instrumentation and Controls – all modes of operation shall be tested.

B. Each subcontractor will be responsible, as required, to assist the FCA by witnessing the testing, putting the system in various modes of operation, and fixing problems found during the test.

C. Contractor shall be responsible for functional performance testing at the end of construction.

D. If major problems are discovered during the test, the responsible subcontractors and Contractor shall fix the problem and the test shall be redone. If more than two

functional performance tests are required, the responsible subcontractor will be back-charged for the FCA's time and expenses.

E. Skilled technicians shall be provided by the appropriate Contractor familiar with the system to execute the functional performance testing of the control system and perform functional performance testing of equipment. The Owner reserves the right to reject any technician who is not qualified to perform the required testing. Qualifications of technicians include site-specific expert knowledge relative to tested equipment and adequate documentation and tools to service and operate the systems.

3.15 RECORD DRAWINGS

A. Contractor shall be responsible for providing the FCA coordinated shop drawing submittals to verify that all trades are coordinating in a reasonable and logical manner.

B. Contractor shall be responsible for providing the FCA final, as-built shop drawings.

END OF SECTION

THIS PAGE INTENTIONALLY LEFT BLANK

SECTION 01 91 14

TESTING AND STARTUP

PART 1 GENERAL

1.01 STARTUP

A. The goal of startup is to verify proper performance and operation of the Facility.

B. Testing and startup are complex portions of the Work required for satisfactory completion and require thorough planning and proper execution.

1.02 DEFINITIONS

A. Acceptance Testing: A contractually required, specific and measurable test, often with liquidated damages attached, to demonstrate a system or facility performs to its intended function (e.g. flow amounts, duration and quality criteria are met). A successor activity to Performance Testing. All major defects are resolved at this point.

B. Process Control and Instrumentation System Provider (PCISP): Entity who is responsible for the development and programming of the Facility PCIS.

C. Auxiliary Systems: Subsystems and systems selected by the Owner as critical to the operation and function of the Work. Auxiliary systems are more specifically identified in the Contract Documents.

D. Commissioning:
   1. The disciplined and systematic process of assuring that all components, subsystems and systems of a constructed unit are designed, installed, tested and operated in conformance with the design intent, and functional intent and operational requirements of the Owner.
   2. This includes:
      a. Proof testing of design intent using static check sheets, dynamic check sheets and defined procedures to ensure compliance with design drawings, data sheets and specifications.
      b. Achieving a smooth and safe transition from an inert state to a completely tested, clean, leak tight, operable and safe unit ready for startup and performance testing.

E. Components: Individual items of equipment or portions of the Work that when combined with other components make up subsystems or systems. Components may be minor items such as pressure gauges, or they may be significant items such as pump motors.

F. Contract Documents: Construction Contract, Specifications and Drawings.

G. Facility: The combined equipment and systems co-located to perform a specified function e.g. Central Area Small-Scale Facility (CASSF).

H. Factory Acceptance Testing (FAT): All testing required to be conducted at the fabricator's / manufacturer's / vendor's off-site locations, witnessed or unwitnessed. Includes all such testing, regardless of the specific descriptive title used for said testing in the Contract Documents.

I. Final Completion: Refer to the Contract Requirements and Supplementary Provisions.

J. Functional Testing: A test of a given component, subsystem or system to confirm its operation meets specifications and Contract requirements. Often a prerequisite to Performance and Acceptance Testing.

K. Intermediate Substantial Completion: The time at which the Project's operating facilities or systems are sufficiently complete to receive primary effluent flow from PLWTP to perform startup with other facilities. All functional tests that can be performed with potable water shall be completed and facilities shall be fully operable to allow for the influent flows.

L. Joint Test Group (JTG): Workgroup consisting of personnel from the Engineer, Construction Manager, Owner, Contractor, and Subcontractors whose goal is to facilitate pre-startup and startup of the Facility.

M. Major Equipment Systems: Systems, subsystems, or major equipment components selected by the Owner as critical to the operation and function of the Work. Major equipment systems are more specifically identified in the Contract Documents.

N. Manufacturer's Installation Inspection: Preliminary inspection conducted by Manufacturer or Manufacturer's accepted representative to confirm proper installation of components, systems, and subsystems.

O. Mechanical/Electrical Functional Testing: Testing performed to confirm general performance of mechanical and electrical systems. Hydrostatic and leak testing of pipes is an example. Electrical testing specified in Division 26, Electrical, shall be considered Mechanical/Electrical Functional Testing.

P. Performance Test: A defined test of a system, systems or facility over a period of 7 days, unless otherwise specified, to demonstrate the system or facility is fully operational and meets all specifications, performance objectives and Contract requirements. Performance testing will be done with CASSF influent (blend of primary influent and primary effluent) pumped from the PLWTP, as defined in this Contract Document.

Q. Operational Readiness Test Part 1, See Section 40 91 00 PROCESS CONTROL AND INSTRUMENTATION SYSTEMS

R. Operational Readiness Test Part 2, See Section 40 91 00 PROCESS CONTROL AND INSTRUMENTATION SYSTEMS

S. Process Instrumentation and Control (PIC): Computer-based system whose purpose is to control and supervise the overall Facility operation. See Section 40 91 00 PROCESS CONTROL AND INSTRUMENTATION SYSTEMS.

T. Staging Site Demonstration: Startup phase during which the PCISP performs a FAT to test the proper communication and action of the PCISP-developed software system. This testing will be conducted offsite.

U. Startup: The act of starting or operating a component, subsystem or system and testing its functionality and performance against defined metrics.

V. Subsystems: A group of related equipment that performs a defined function and is an element of a larger system.

W. Substantial Completion: Upon satisfactory completion of the 14-Day Systemwide Facility Acceptance Test. Refer to Contract requirements and Supplementary Provisions.

X. Systems: A group of related components, equipment or subsystems that perform a defined function or set of functions within a facility.

Y. Training: Classroom and equipment area instruction by Manufacturer or Manufacturer accepted representative intended to educate the Owner on the proper operation and maintenance of components, systems, and subsystems.

Z. Unit Process: Portion of the facility that performs a specific process function, such as biological nutrient removal (BNR), membrane bioreactor (MBR), ozonation, biologically active carbon (BAC) filtration, membrane filtration (MF), reverse osmosis (RO), ultraviolet (UV)/advanced oxidation process (AOP), and chemical storage and feed.

AA. Beneficial Use: Utilization of a system, unit process, or facility by the Owner. Refer to Supplemental Special Provisions for further definition and extended warranty requirements for equipment placed into Beneficial Use.

1.03 SUBMITTALS

A. Action Submittals:
   1. Startup Personnel Qualifications: The qualifications submittal for the Startup Manager shall be provided at the Preconstruction Conference.
   2. Startup Management Plan: Submitted within 60 days after Notice to Proceed.
   3. Overall Facility Startup Plan.
   4. Factory Acceptance Test Plans.
   5. Acceptance Test Plans.
   6. Startup Schedule:
      a. Schedule shall be a detailed Oracle Primavera P6 schedule linked to the milestones and key startup activities contained in the Construction Schedule

as specified in Section 01 32 00 CONSTRUCTION PROGRESS DOCUMENTATION.

b. The Startup Schedule shall include each phase of testing of for the systems defined herein.

c. Schedule shall be submitted in both XER and PDF format and updated monthly.

d. The detailed Startup Schedule shall be submitted no later than 6 months prior to the start of ORT Part 1 in the accepted Baseline Schedule, as specified in Section 01 32 00 CONSTRUCTION PROGRESS DOCUMENTATION.

7. Startup Results Submittal:

a. Include the following:

1) Final minutes from all JTG meetings.

2) Results documentation from all Factory Acceptance Testing.

3) Completed test plans (endorsed by Construction Manager and Contractor).

4) Record of all Training:

a) Training requests.

b) Agendas.

c) Sign in sheets.

d) Handouts.

e) Electronic copy of all training presentations.

5) Record of all Manufacturer Services/Inspections.

6) Record of all testing not covered above.

1.04 JOINT TEST GROUP (JTG)

A. Purpose:

1. The purpose of the JTG is to facilitate communication and collaboration between all parties required to successfully complete startup including but not limited to the following:

a. Prepare test plans.

b. Conduct testing.

c. Oversee testing.

d. Assign individual or multiple JTG personnel tasks associated with startup to be completed outside of the JTG workshops.

B. Personnel:

1. The following Owner personnel will participate in the JTG:

a. Engineer.

b. PCISP.

c. Owner's Representatives:

1) Construction representative.

2) Operations representative.
d. Construction Manager.
e. Owner Startup Manager.
f. Others as required.

2. The Contractor shall assign the following personnel to the JTG:
a. Contractor Startup Manager.
b. Electrical Subcontractor Management Representative.
c. BNR/MBR System Management Representative
d. Ozone Supplier Management Representative.
e. MF Supplier Management Representative.
f. RO Suppliers (multiple technologies) Management Representatives.
g. UV/Advanced Oxidation Supplier Management Representative.
h. Other equipment systems Management Representatives.
i. PCISP Representative.

C. The JTG will participate in the following meetings:
1. Startup Preparation Workshops:
a. Status of equipment submittals and startup plan for overall facility.
b. Development of team.
c. Frequency: Every 2 weeks.
d. Duration: 4 hours minimum.
e. Start Date: 4 weeks after Notice to Proceed.
2. Startup Planning Workshops:
a. Preparation of test plans.
b. Review of equipment shop drawings.
c. Frequency: Every week.
d. Duration: 8 hours minimum.
e. Start Date: 6 months before anticipated commencement of functional testing.
3. Factory Acceptance Test Prep Workshops:
a. Preparation of factory test plans.
b. Address scheduling.
c. Frequency: Once per required FAT.
d. Duration: 8 hours minimum.
e. Start Date: 2 months prior to anticipated FAT date.
4. Pre-Startup Execution Workshops:
a. Finalize planning for startup activities.
b. Finalize test plans.
c. Address any supplier/manufacturer issues.
d. Frequency: Every week.
e. Duration: 8 hours minimum.

f. Start Date: 1 month before anticipated commencement of functional testing.

5. Startup Execution Workshops:
   a. Current status of testing.
   b. Identification of specific needs.
   c. Identification and resolution of issues.
   d. Frequency: Daily.
   e. Duration: 4 hours minimum.
   f. Start Date: Commencement of functional testing, through completion of 30-Day Facility Acceptance Testing.

D. Authority:
1. The Construction Manager will be the final authority on all disputes. Construction Manager's authority is not intended to compromise or change the Contractor's rights and responsibilities as described elsewhere in these Contract Documents.
2. The JTG may not independently amend or change the Contract Documents. However, the Contract Documents may be amended or changed according to the Contract Documents, based on JTG recommendations approved by the Construction Manager.

E. Contractor Participation:
1. The Contractor is required to participate in all JTG meetings and shall dedicate the required time and personnel to complete tasks assigned by the JTG. This shall include, but not be limited to the development of all startups and testing plans identified as being required to be led by the Contractor.
2. The Contractor shall include, in his lump sum bid, all costs associated with onsite and offsite testing described in these Specifications including travel, subsistence, lodging, etc.

1.05 ORGANIZATION OF STARTUP PHASES

A. Table 1 below summarizes the various phases of startup:

Table 1: Organization of Startup Phases

Description	Duration	Preceding Constraints	Comments
Submittals	As required to meet testing schedule		
Factory Acceptance Testing	As required to meet testing schedule	Approved submittals required prior to testing.	
Staging Site Demonstration	180 days	Delivery of PCIS components to PCISP staging site. Completion of all FATs.	Done by PCISP.

Table 1: Organization of Startup Phases			
Description	Duration	Preceding Constraints	Comments
Mechanical/Electrical Functional Testing and Equipment Testing	As required to meet testing schedule for individual unit process	Complete all FATs. Complete equipment and piping installation. Approved submittals required prior to testing (including O&Ms).	Includes hydrostatic testing and leakage testing.
PCIS Operational Readiness Test Part 1	As required to meet testing schedule	Manufacturer's installation assistance and inspection. Completion of PCIS Operational Readiness Test Part 1. Completion of staging site demonstration test and loading of application software. Approved submittals required prior to testing (including O&Ms).	
PCIS Operational Readiness Test Part 2	As required to meet testing schedule	Completion of PCIS Operational Readiness Test Part 1. Completion of staging site demonstration test and loading of application software. Approved submittals required prior to testing (including O&Ms).	
Functional and Performance Testing on Unit Processes	As required to meet testing schedule	Completion of PCIS Operational Readiness Test Part 2. Approved submittals required prior to testing (including O&Ms).	
Training	As specified	Completion of all functional and performance testing.	
Facility Commissioning	As required	Completion of Functional and Performance Testing of Unit Processes and Auxiliary Systems, and Training.	

Table 1: Organization of Startup Phases			
Description	Duration	Preceding Constraints	Comments
Facility Acceptance Test	14 days	Completion of commissioning of the unit processes. Manufacturer's Certificate of Proper Installation (CPI). Training. Approved submittals required prior to testing (including O&Ms).	

1.06 SUGGESTED SUB-SYSTEM LEVEL STARTUP SEQUENCE

A. Table 2 below provides a suggested startup sequence. The Contractor is responsible for developing the required details.

B. For all tests, record the readings and findings as the test progress.

C. All the upstream systems shall be completed and in operation for testing of downstream systems.

D. Chemical system filling and dosing shall be tested prior to using them on any of the major process system.

E. Temporary piping may be required for testing some of the systems and the Contractor shall account them.

Table 2: Suggested Sub-System Level Startup Sequence			
Subsystem	Major Items included	Suggested Startup Approach	Remarks
Drain Pump Station	• Drain Pump Station Pumps and Structure	• Ensure that all system components including associated piping, electrical, instrumentation and controls are installed properly, individually tested, and ready for subsystem start up. • Provide a temporary fill connection to the Drain Pump Station and vary the water levels in the tank.	Drain Pump Station and all the site wide drain lines shall be ready for all systems tests to proceed.

Table 2: Suggested Sub-System Level Startup Sequence

Subsystem	Major Items included	Suggested Startup Approach	Remarks
		• Verify that the Drain Pumps start and stop at respective level set points. • Confirm that the instruments are providing required feed back correctly.	
Primary Influent (PI), Primary Effluent (PE), and Blend Tank (BT)	• PI Grinder • PI Pump • PI Strainer • PE Pump • Blend Tank • Blend Tank Mixing Pump	• Ensure that all system components including associated piping, electrical, instrumentation and controls are installed properly, individually tested, and ready for subsystem start up. • Pump PI and PE based on set flow rates to maintain the blend ratio. • Verify that the PI and PE pumps are able to maintain the blend ratio and total flow rate as required for the process. • Verify all instrument feedback, alarms, interlocks, and shutdowns are functioning properly.	• Overflow the blended feed from blend Tank to West Point Loma Interceptor through the drain line and Drain Pump Station.
Biological Nutrient Removal (BNR) / Membrane Bioreactor (MBR) System	• BNR Feed Pump • Self-Cleaning Strainers • BNR System complete with all auxiliary systems • ML Feed Pump	• Ensure that all system components including associated piping, electrical, instrumentation and controls are installed properly, individually tested, and ready for subsystem start up.	• Overflow the MBR Filtrate from MBR Filtrate Tanks to West Point Loma Interceptor through the drain line and Drain

Table 2: Suggested Sub-System Level Startup Sequence

Subsystem	Major Items included	Suggested Startup Approach	Remarks
	• MBR System complete with all auxiliary systems such as Air Scour, CIP, Chemical Systems • MBR Filtrate Tanks and Pathogen Test Tanks	• Pump Blended Feed to BNR through the self-cleaning strainers. • Ensure all auxiliary systems of BNR are on automatic mode and functioning correctly. • Operate ML Feed Pump to feed MBR Tank • Ensure all auxiliary systems of MBR are on automatic mode and functioning correctly. • Complete all modes of MBR operation such as relaxation, back pulse, clean-in-place (CIP) • Verify all instrument feedback, alarms, interlocks, and shutdowns are functioning properly. • Confirm that all process parameters are consistently achieved.	Pump Station.
Ozone System	• PWF Feed Pump • Ozone Generation System • Ozone Contactors	• Ensure that all system components including associated piping, electrical, instrumentation and controls are installed properly, individually tested, and ready for subsystem start up. • Pump MBR Filtrate to Ozone Contactors. • Ensure all auxiliary systems of Ozone System are on automatic mode and functioning correctly.	Overflow Ozone effluent from downstream tank to West Point Loma Interceptor through the drain line and Drain Pump Station.

Table 2: Suggested Sub-System Level Startup Sequence			
Subsystem	Major Items included	Suggested Startup Approach	Remarks
		• Verify all instrument feedback, alarms, interlocks, and shutdowns are functioning properly. • Confirm that all process parameters are consistently achieved.	
BAC System	• BAC Filters • BAC Air Scour Blower • BAC Backwash Pump	• Ensure that all system components including associated piping, electrical, instrumentation and controls are installed properly, individually tested, and ready for subsystem start up. • Feed Ozone Effluent to BAC Filters. • Ensure all auxiliary systems of BAC Filters are on automatic mode and functioning correctly. • Complete all modes of BAC operation such as air scour and backwash. • Verify all instrument feedback, alarms, interlocks, and shutdowns are functioning properly. • Confirm that all process parameters are consistently achieved.	Overflow BAC Filter effluent from downstream tank to West Point Loma Interceptor through the drain line and Drain Pump Station.
MF System	• MF Skid • MF Air Scour Blower • MF Backwash Pump	• Ensure that all system components including associated piping, electrical, instrumentation and	Overflow MF effluent from downstream tank (RO Feed Tank) to West

Table 2: Suggested Sub-System Level Startup Sequence

Subsystem	Major Items included	Suggested Startup Approach	Remarks
	• MF CIP System	controls are installed properly, individually tested, and ready for subsystem start up. • Feed BAC Effluent to MF System. • Ensure all auxiliary systems of MF System are on automatic mode and functioning correctly. • Complete all modes of MF operation such as air scour, backwash, and CIP. • Verify all instrument feedbacks, alarms, interlocks, and shutdowns are functioning properly. • Confirm that all process parameters are consistently achieved.	Point Loma Interceptor through the drain line and Drain Pump Station.
RO System (three different RO System configurations are tested and specific requirements shall be developed in coordination with the system suppliers)	• RO Skid • RO Flush system • RO CIP System	• Ensure that all system components including associated piping, electrical, instrumentation and controls are installed properly, individually tested, and ready for subsystem start up. • Feed MF Filtrate to RO Systems. • Ensure all auxiliary systems of RO System are on automatic mode and functioning correctly. • Complete all modes of RO operation such as RO Flush and RO CIP.	Overflow RO Permeate from downstream tank (RO Flush Tank) to West Point Loma Interceptor through the drain line and Drain Pump Station.

Table 2: Suggested Sub-System Level Startup Sequence			
Subsystem	Major Items included	Suggested Startup Approach	Remarks
		• Verify all instrument feedbacks, alarms, interlocks, and shutdowns are functioning properly. • Confirm that all process parameters are consistently achieved.	
UV/AOP System	• UV Reactors • AOP Feed System	• Ensure that all system components including associated piping, electrical, instrumentation and controls are installed properly, individually tested, and ready for subsystem start up. • Feed RO Permeate to UV Reactors. • Ensure that UV System is on automatic mode and functioning correctly. • Verify all instrument feedbacks, alarms, interlocks, and shutdowns are functioning properly. • Confirm that all process parameters are consistently achieved.	

1.07 WORK RELATED TO THE FACILITY

A. During the period between Intermediate Substantial Completion and Substantial Completion, the Owner will operate the facility and the required signal transfer with PLWTP.

1.08 CONTRACTOR STARTUP PERSONNEL

A. Contractor shall provide personnel, both supervisory and from the applicable trades, who are experienced in startup, testing, and commissioning for the

execution of the work described in these Contract Documents.

B. Startup Manager: Only assigned duties are those specifically related to planning and execution of startup activities in support of the Work. The Startup Manager shall have the necessary experience to fully understand all startup requirements and the authority to dedicate Contractor's resources as required to execute the Work.
   1. The Startup Manager shall have the following minimum qualifications:
      a. Has provided startup services for verifiable water and wastewater facilities and conveyance facilities similar to those included in the Work.
   2. The Contractor shall allocate the costs for the Startup Manager as a monthly allocation starting at the project limited NTP and terminating at Final Completion.
   3. Once the Owner and Construction Manager accept the Startup Manager, the Contractor shall not change the Startup Manager throughout the full period of performance of the Work, beginning after the limited NTP, without the express written permission of Construction Manager and Owner.
   4. The minimum scope of services to be managed and/or executed by the Startup Manager shall include the following tasks:
      a. Formation of an onsite startup team of supervisory staff, including the Contractor's Project Integrator, qualified in each and every element of the startup process required as part of the Work. This staff shall prepare all Contractor-performed startup and testing documentation and direct the associated startup activities, including all required Contractor and Subcontractor personnel required for testing. This requirement is also applicable to all factory testing, whether witnessed by Construction Manager or not.
      b. Complete planning, development, and where required, the preparation of all Startup and Test Plans, testing procedures, schedules, and related prerequisite, and final documentation for startup activities required by the Contract Documents. This requirement is applicable to all required startup and/or testing plans, reports, and procedures, regardless of the specific portion of the Contract Documents where they may be specified or otherwise required.
      c. Overall coordination and scheduling of all startups and testing activities. This shall include the development of detailed startup and testing schedules, integrated with Contractor's CPM schedule. It shall also include all coordination with the Owner and Construction Manager for operation of the system to accommodate test flows and joint testing activities.
      d. Coordination of all manufacturers' startup activities and certification of proper installation and/or function as required by the Contract Documents.
      e. Coordination, direction, and management of the actual day-to-day testing.
      f. Review and certify all test results. Prepare and/or compile all versions of all test reports and related submittals. Prior to being submitted to the Construction Manager, all test reports shall be certified by the Startup Manager that the reports and associated test results comply with the Contract Documents.

g. Coordinate all testing and startup with the Engineer, Construction Manager, and Owner.
h. Integration with the vendor packaged control systems.

C. Project Integrator: Only assigned duties are those specifically required to plan and execute the installation, interconnection, integration, and startup of the various PCIS devices, panels, components, systems, and subsystems required for the Work. The Project Integrator shall have the necessary experience to fully understand all PCIS and related devices, panels, components, systems, and subsystems installation, integration, and startup requirements and the authority to dedicate Contractor's resources as required to execute the Work.
1. The Project Integrator shall have the following minimum qualifications:
a. Has provided PCIS integration services for verifiable wastewater facilities similar to those included in the Work.
b. The Project Integrator shall not be the same person as the System Integrator for the Instrumentation and Control system.
2. The Contractor shall allocate the costs for the Project Integrator as a monthly allocation starting at the project limited NTP and terminating at Final Completion.
3. Once the Owner and the Construction Manager accept the Project Integrator, the Contractor shall not change the Project Integrator throughout the full period of performance of the Work without the express written permission of the Construction Manager and Owner.
4. The minimum scope of services to be managed and/or executed by the Project Integrator shall include the following tasks:
a. Integration of all PCIS components and related devices, panels, components, systems, and subsystems required to be provided as part of the Work, regardless of the actual supplier or prepackage nature of the supply.
b. Integration and coordination of the Process Instrumentation and Control System with all components provided as packaged systems or supplied with individual equipment suppliers.

D. The Startup Manager and the Project Integrator may not be the same person.

1.09 THE STARTUP MANAGEMENT PLAN

A. The Contractor Startup Manager shall conduct a startup coordination workshop and prepare and submit a Startup Management Plan that describes how Contractor will accomplish the minimum scope of services and manage the daily startup activities. The coordination workshop shall, at a minimum, include the Contractor's Startup Manager, Project Integrator, and Project Superintendent. The requirements for Startup requirements for the Work will be reviewed at the workshop. The Startup Management Plan shall be prepared immediately following the workshop and shall include a detailed description, including procedures and examples of how the Startup Team will manage the interface between Contractor's trades, Contractor's management, Contractor's subcontractors, Contractor's PLC programmers, Construction Manager's field team, Owner, and the PCISP

programming team. The workshop shall be conducted within 12 weeks of Notice to Proceed. The draft Startup Management Plan shall be completed and submitted within 4 weeks of the startup coordination workshop. The plan will be reviewed and processed for acceptance in accordance with Section 01 33 00 SUBMITTAL PROCEDURES.

1.10 THE STARTUP AND TEST PLANS

A. The Contractor under the guidance of the JTG will develop specific plans for the testing of all elements of the Facility. These plans shall outline the detailed sequence of activities necessary to confirm the proper operation of every component, system, and subsystem.

B. Test plans will be prepared for each phase of startup where testing is required including, but not limited to the following:
   1. Factory acceptance testing.
   2. Staging site demonstration.
   3. Manufacturer's installation inspection.
   4. Mechanical/electrical functional testing.
   5. Operational Readiness Test Part 1.
   6. Operational Readiness Test Part 2.
   7. Functional and performance testing on the following unit processes shall have individual test plans for each unit process with its auxiliary systems.
      a. PI/PE Feed Pump Systems
      b. BNR/MBR System.
      c. Ozone system.
      d. BAC system.
      e. MF system.
      f. RO system.
      g. UV/AOP system.
   8. Chemical systems. Facility acceptance test.
   9. Pump and other equipment not listed above Performance Testing.

C. Test plans will be developed as described below:
   1. The Overall Startup Plan shall include six main sections arranged as follows:
      a. Overall Startup Plan Summary.
      b. Factory Acceptance Testing.
      c. Operational Readiness Testing.
      d. Functional and Performance Testing.
      e. Systemwide 30-Day Startup Schedule.
   2. The contents and requirements pertaining to each section are described below. It is expected that each section could require multiple volumes, depending on the size and complexity of the Work.
   3. Overall Startup Plan Summary:

a. The Overall Startup Plan Summary is the master startup plan document. It includes a brief summary of all testing and startup activities and provides the basic organization of the startup and testing program. It shall be submitted in advance of any other test plans except for Factory Acceptance Test Plans as described herein.

b. The Overall Startup Plan Summary shall include the following:

1) Introduction with a narrative description of the overall testing and startup program planned for implementation by the Contractor. Tables and flowcharts in addition to those described below should be included to clearly illustrate the Contractor's intent for the testing and startup program.

2) List of major Acceptance Test Plan categories. Factory Acceptance Testing shall be a specific subset for each category. At a minimum, a separate acceptance test plan shall be prepared for the following four categories:

a) All PCIS testing specified in Division 40 of the specifications and including all related testing referring to Division 40 from other specification sections and divisions.

b) All electrical testing specified in Division 26, Electrical, of the specifications and including all related testing referring to Division 26, Electrical, from other specification sections and divisions.

c) All hydrostatic testing of piping and appurtenances, pipelines, aqueducts, valves, water holding structures, pressure vessels, tanks, and any other component, subsystem, or system specified to be hydrostatic, or pressure tested.

d) Unless otherwise indicated in the Contract Documents, all other testing.

c. In addition to the breakdown listed above, the Contractor may propose to further divide, or group, the testing into categories assigned by process area or physical site delineation. However, said division or grouping must be agreed to, in writing, by the Construction Manager prior to the initial submittal of the Overall Startup Plan Summary. The Construction Manager will be the sole judge as to the acceptability of the additional division or grouping of testing proposed by the Contractor.

a) Complete listing of component, subsystem, and system tests within each Test Plan category. Special focus should be placed on a complete listing of tests for all major equipment items and all auxiliary systems identified in the Contract Document. In any case, all components, sub-systems, and systems and their associated testing shall be included in the listing.

b) Complete listing of Factory Acceptance Testing (witnessed and unwitnessed). All specified Factory Acceptance Testing will be required to be successfully completed to achieve Substantial Completion. It may be to the Contractor's benefit to obtain concurrence on the listing of Factory Acceptance Testing early in

the project. In that case, this section would simply be a copy of the material already agreed to, with any updates.

c) Flowchart the full testing program from Factory Acceptance Testing and initial shakedown through Acceptance Testing and ending at Substantial Completion. The flowchart shall demonstrate the precedence, or order, by which the testing will take place. The order of testing shall be such that it is consistent with the requirements of the Contract Documents.

d) Provide a preliminary schedule illustrating the timeline associated with the flowchart described above. This schedule does not need to be CPM based as it will be replaced with schedules developed according to requirements stated below for the Startup Schedule.

4. Factory Acceptance Test Plan:

a. The Factory Test Plan shall be a comprehensive description of the complete test setup, procedures, analyses, and reporting program for each factory test required for the Work. Detailed step by step procedures describing all activities in the test process shall be included for all factory tests, witnessed or unwitnessed. Unwitnessed readiness tests prior to witnessed PIC Factory Acceptance Test are exempt from this requirement. However, all other shop or factory tests, witnessed, or unwitnessed, that require testing to demonstrate compliance with the Contract Documents and require submittal of test results, must have a Factory Acceptance Test Plan accepted by the Engineer and Construction Manager at least 4 weeks prior to the test.

b. At a minimum, the following shall be included for each Factory Acceptance Test Plan:

1) Identification information for the component, subsystem, or system being tested. All applicable tag numbers shall be included.

2) A narrative description of the purpose and goals of the test.

3) Pass/Fail criteria.

4) A listing and copy of all pertinent reference documents (Contract Documents and industry standards or specifications applicable to the testing).

5) Complete description, including drawings, for all test stands and/or test apparatuses.

6) Credentials of test personnel.

7) Descriptions of all test equipment.

8) Descriptions and product information, including calibration certificates, for all test instruments.

9) Step-by-step detailed procedures of how the test will be conducted. The level of detail shall be sufficient for any witness with a rudimentary technical aptitude to be able to follow the steps and develop confidence that the tests were being performed as planned. All steps are significant, and all steps shall be included in the procedures.

10) Copies of the actual data logs and/or data recording forms that will be used for the test.

11) A complete disclosure of all calculation methodologies.
12) Sample computations or analyses with results in the same format as the final report. This item is intended to demonstrate how data collected will be used to generate final results. A sample shall be included for each type of computation required for the test and analysis of results.
13) A detailed outline of the final factory testing report.

c. Each factory test shall be described separately. Factory Acceptance Test Plans are the only portion of the Startup and Test Plans that will be accepted prior to acceptance of the Overall Startup Plan Summary. Also, Factory Acceptance Test Plans will be allowed to be submitted and reviewed individually. However, the Overall Startup Plan Summary is required to summarize the factory testing program and all submittal numbers for individually submitted Factory Acceptance Test Plans shall be accurately accounted for in that document.

d. This section is not intended to supersede the specific requirements for PCIS Factory Acceptance Tests (FATs) described for the Work. However, Factory Acceptance Test Plans shall be provided for the PCIS FATs in accordance with these requirements. In the case of conflict, the specific testing requirements of the FATs in the PCIS specification sections shall prevail. All other Factory Acceptance Testing Plans shall strictly comply with this section unless otherwise approved by the Construction Manager.

D. Contractor shall execute these test plans with the witnessing of the Construction Manager and/or Engineer and/or Owner.

E. For startup and testing purposes, the following designations are made:

1. Main Unit Processes:
   a. PI/PE Feed Pump Systems
   b. BNR/MBR system.
   c. Ozone system.
   d. BAC system.
   e. MF system.
   f. RO system.
   g. UV/advanced oxidation system.
   h. Chemical Facilities, including but not limited to:
      1) Ammonium sulfate system.
      2) CIP systems including citric acid system.
      3) Antiscalant system.
      4) Sodium hydroxide system
      5) Sodium hypochlorite system.
      6) Sodium bisulfite system.
      7) Sulfuric acid system.
      8) Acetic acid system.
   i. PCIS/Control:

1) PCIS with UPS.
2) Instruments.
3) Interconnection and control cables/wiring.
4) Appurtenant communication and interconnection devices and equipment.
5) Communications Systems.

2. Auxiliary Systems:
   a. Main Piping:
      1) Associated main discharge pipe valves and piping out to PLWTP and other facility interfaces
      2) Yard piping.
      3) Appurtenant instruments, devices, valves, and piping.
   b. Miscellaneous Systems (all structures, as applicable):
      1) Potable water.
      2) Non-potable utility water.
      3) Lighting.
      4) Sump pumps.
      5) Miscellaneous instruments and devices (i.e., flood switches).
   c. Corrosion Control: Coating materials.
   d. Water Quality Instrumentation.

F. Contractor shall submit the completed test reports as part of the Startup Results Submittal.

PART 2 PRODUCTS (NOT USED)

PART 3 EXECUTION

3.01 GENERAL STARTUP AND TESTING REQUIREMENTS

A. Contractor is responsible for the complete testing, check out, startup, and commissioning of all elements of the Facility. Verify these activities through daily inspection reports, test records/reports, onsite vendor certifications, specified testing, and by other appropriate means. Startup and Testing Plans and Test Reports shall include specific language to demonstrate that the requirements stated herein are planned, executed, and accomplished. The requirements below are complementary to those indicated elsewhere in the Contract Documents.

B. Engineer and Construction Manager shall be solely responsible for determining the party responsible for conducting any and all corrective actions and for determining the party responsible for any and all delays.

C. Facility Startup Meetings: Schedule, in accordance with requirements of Section 01 31 19 PROJECT MEETINGS to discuss test schedule, test methods, materials, chemicals and liquids required, facilities operations interface, and Owner involvement.

D. Provide temporary valves, gauges, piping, test equipment and other materials and equipment required for testing and startup.

E. Owner will:
   1. Provide water and power required for startup, unless otherwise indicated.

3.02 FACTORY ACCEPTANCE TESTING

A. Contractor shall coordinate the timing and location of all Factory Acceptance Testing (FAT) including, but not limited to the following items:
   1. BNR/MBR Systems
   2. Ozone/Biological Activated Carbon (BAC) system.
   3. MF system.
   4. RO systems.
   5. UV/advanced oxidation system.
   6. Pumps
   7. Any other systems containing PLC's or complex control panels as identified by the Construction Manager.
   8. Plant Control and Instrumentation System

B. The JTG will prepare the test plans for each FAT or review manufacturer standard test plans in accordance with these Contract Documents. The Contractor's Startup Manager shall be the lead representative for the development of these test plans. Test plans shall be submitted at least 60 days prior to the onset of FAT for each equipment.

C. The following Contractor personnel are required to attend all FATs:
   1. Startup Manager.
   2. Project Integrator.
   3. Manufacturer Representative(s).

D. FAT shall be completed, and test reports submitted and accepted by the Construction Manager prior to the respective equipment are shipped from the manufacturer's facility.

3.03 STAGING SITE DEMONSTRATION

A. The PCISP shall provide the required items for the development of the application software programming.

3.04 MANUFACTURER'S INSTALLATION INSPECTION

A. When Contractor has completed installation of components, systems, or subsystems, they shall schedule a manufacturer inspection after the Contractor has completed installation tests such as hydro tests, leak tests and other similar tests. This manufacturer or approved manufacturer's representative shall certify

that the component, system, or subsystem is properly installed and that testing of the component, system, or subsystem may commence.

B. Preparation:
   1. Complete installation before testing.
   2. Furnish qualified manufacturers' representatives, when required by individual Specification sections.
   3. Obtain and submit from equipment manufacturer's representative Manufacturer's Certificate of Proper Installation Form, in accordance with Section 01 43 33 MANUFACTURERS' FIELD SERVICES, when required by individual Specification sections.
   4. Cleaning and Checking:
      a. Prior to beginning functional testing:
         1) Calibrate testing equipment in accordance with manufacturer's instructions.
         2) Inspect and clean equipment, devices, connected piping, and structures to ensure they are free of foreign material.
         3) Lubricate equipment in accordance with manufacturer's instructions.
         4) Turn rotating equipment by hand when possible, to confirm that equipment is not bound.
         5) Open and close valves by hand and operate other devices to check for binding, interference, or improper functioning.
         6) Check power supply to electric-powered equipment for correct voltage.
         7) Adjust clearances and torque.
         8) Test piping for leaks.
   5. Ready-to-test determination will be by Engineer and Construction Manager based at least on the following:
      a. Acceptable Operation and Maintenance Data.
      b. Notification by Contractor of equipment readiness for testing.
      c. Receipt of Manufacturer's Certificate of Proper Installation, if so specified.
      d. Adequate completion of work adjacent to, or interfacing with, equipment to be tested, including Membrane Equipment System.
      e. Availability and acceptability of manufacturer's representative, when specified, to assist in testing of respective equipment.
      f. Satisfactory fulfillment of other specified manufacturer's responsibilities.
      g. Equipment and electrical tagging complete.
      h. Delivery of all spare parts and special tools.

3.05 MECHANICAL/ELECTRICAL FUNCTIONAL TESTING

A. After each mechanical system is completely installed, the Contractor shall confirm proper installation according to these Contract Documents. Mechanical system testing shall include, but not be limited to the following system types:
   1. Piping (buried and exposed).

2. Freestanding tanks.
3. Pumps, Motors, and Drives

B. After the complete installation of electrical systems (or portions thereof), the Contractor shall conduct all testing, including the independent electrical testing, as specified in Division 26, Electrical.

3.06 OPERATIONAL READINESS TEST PART 1

A. This work shall consist of manual verification of controls, verification of instrument calibration, and the completion of all loop checks.

B. The Operational Readiness Test Part 1 shall be performed by the PCIS Integrator to test and document the PCIS, excluding PCISP provided applications software, is ready for operation.

3.07 OPERATIONAL READINESS TEST PART 2

A. The Operational Readiness Test shall be a coordinated effort between the Contractor, PCIS System Integrator, and PCISP to confirm the PCIS, including the applications software is ready for operation. This testing is described in Division 40, Process Interconnections.

3.08 FUNCTIONAL TESTING ON UNIT PROCESSES

A. Functional Testing shall include successful completion of all specified testing and related work required by the Contract Documents. Successful Functional Testing will demonstrate that all portions of the unit processes or auxiliary systems are functional, operational, installed as specified, and perform their intended function. Test plans shall be submitted at least 60 days prior to the onset of the respective tests.

B. Demonstration of the ability of all portions of the facilities to successfully operate, as specified, over their full range of capacity or capability is required as part of Functional Testing. Functional Testing shall include all balancing, adjustments, specified tests (both factory and field), tuning, and startup activities not included in Performance Testing.

C. Functional testing shall be performed using dechlorinated potable water.

D. Functional Testing shall include testing of all specified shutdown conditions, failure conditions, pumping station power fail and restart, bypass conditions, and failure resets. Functional Testing shall include all equipment testing for operating parameters. Functional Testing shall not be considered complete until all testing produces successful results and all documentation of tests and all manufacturer's certifications required by the Contract Documents are submitted and accepted by the Construction Manager. Functional Testing shall be successfully completed prior to conducting and Performance Testing or Facility Commissioning.

E. Equipment Testing shall be conducted as part of Functional Testing.

1. Furnish the services of an experienced and authorized representative of the manufacturer or supplier of each item of equipment indicated in the equipment schedules (excluding manually-operated valves), injectors, tanks, batch-type disc meters, rotameters, and other minor items of equipment specifically exempted by the Engineer or Construction Manager in writing), who shall visit the Site of the Work and inspect, check, adjust if necessary, and approve the equipment installation. In each case, arrange to have the supplier or manufacturer's representative revisit the Site as often as necessary until any and all trouble is corrected, and the equipment installation and operation are satisfactory to the Construction Manager.
2. Contractor shall require that each manufacturer's representative furnish to the Construction Manager a written report addressed to the City certifying that the equipment has been properly installed and lubricated, is in accurate alignment, is free from any undue stress imposed by connecting piping or anchor bolts and has been operated satisfactorily over its full range of capability and under full-load conditions.
3. Contractor shall require that the electrical and/or instrumentation subcontractor and the adjustable speed drive supplier furnish a written and signed report to the Construction Manager certifying that the motor control logic for the equipment items that reside in motor control centers, control panels, control boards, microprocessors, computers, and the like furnished by the electrical and/or instrumentation Subcontractor have been properly tested and calibrated. This shall include motor bump test and rotation test. The report shall certify that the control logic for equipment startup, shutdown, sequencing, resets, interlocks, and emergency shutdown have been tested and is properly operating. The Contractor shall also sign said certification.

3.09 EQUIPMENT PERFORMANCE TESTING

A. Testing specified within specific equipment specifications to verify performance requirements of a piece of equipment.

B. This testing shall be performed by the equipment supplier with support from the Contractor.

C. The method for testing to validate the performance requirements shall be provided in submitted and approved test plan submittals.

3.10 SYSTEM PERFORMANCE TESTING

A. Testing of the defined main unit process systems over the specified period of time to demonstrate that the unit process is fully operational and meets all specifications, performance objectives and Contract requirements.

B. Complete the performance testing of each upstream unit process prior to performance testing of a downstream unit process in order to provide each unit process with the required influent water quality conditions for operation.

C. Submit a performance testing plan that incorporates the sequences and water supplies described in Table 2 of this Section and provide temporary connections as required for the testing operations indicated.

D. Each unit process system shall continuously meet performance requirements specified and shall operate without fault, failure, or defect for a continuous period.
   1. Individual equipment/system failures that are corrected within 24 hours and do not prevent the entire process from continuously satisfying the established operational requirements shall not require the consecutive-day test to be restarted unless the failure recurs.
   2. Restart the consecutive test period for any of the following conditions:
      a. Any failure of the complete unit process system to meet operational requirements.
      b. When malfunctions or deficiencies cause shutdown or partial operation of the unit process system.
      c. Any individual equipment/system failure that meets any of the following conditions:
         1) Requires more than 24 hours to correct.
         2) Recurs within the 24-hour correction period requiring further correction.
      d. Immediately correct defects in material, workmanship, or equipment/system which became evident during Performance Testing.

E. Performance Testing Requirements and Durations.
   1. Conduct tests as specified in this Section and as required in the process startup specification sections for each main unit process system. Unless otherwise approved by the Construction Manager, performance testing will commence after delivery of blended primary influent and primary effluent from PLWTP.
   2. Main Unit Process Tests.
      a. BNR/MBR System.
         1) Duration: 30 continuous days
         2) Unit process test: Section 46 41 40 BNR SYSTEM.
      b. Ozone System.
         1) Duration: 7 continuous days (after acceptable MBR filtrate water quality is demonstrated)
         2) Unit process test: Section 46 31 52 - Ozone/BAC System
      c. BAC System.
         1) Duration: 7 continuous days.
         2) Unit process test: Section 46 31 52 - Ozone/BAC System
         3) Unit testing may be included with Ozone System
      d. MF System.
         1) Duration: 7 continuous days.
         2) Unit process test: Section 46 61 36 – Membrane Filtration System
      e. RO System.
         1) Duration: 7 continuous days.

2) Unit process test: Section 46 63 23.01 through Section 46 63 23.03 – Reverse Osmosis Systems.

f. UV Advanced Oxidation System.

1) Duration: 7 continuous days (after acceptable RO System permeate water quality is demonstrated).

2) Unit process test: Section 46 66 13 – UV Advanced Oxidation System

3. The specified test duration represents the continuous operation of the system. System tests shall be completed in parallel to keep the overall schedule to the minimum.

a. Continuous operation of all elements and components of the system for the specified test duration is not required where identical elements (such as RO trains) are part of the system.

b. Performance testing shall demonstrate that all identical elements (such as RO trains) are capable of operation in parallel and in sequence as required by the specified control strategies.

F. Temporary Facilities.

1. Install temporary piping, valves, hoses, supports and materials as required for testing.

2. A dechlorinated potable water supply shall be made available for temporary use with ancillary systems such as the MF EFM/CIP system.

3.11 FACILITY COMMISSIONING

A. Facility Commissioning Testing:

1. The disciplined and systematic process of assuring that all components, subsystems and systems of a constructed unit are designed, installed, tested and operated in conformance with the design intent, and functional intent and operational requirements of the Owner.

2. Notify Construction Manager, Engineer and Owner in writing at least 10 days prior to scheduled date of test.

3. Commissioning shall not commence until equipment has been accepted by Construction Manager and Engineer as having satisfied performance test requirements specified.

4. Type of fluid, gas, or solid for testing shall be as specified.

5. Unless otherwise indicated, furnish labor, materials, and supplies for conducting the test and taking samples and performance measurements.

6. Prepare Test Reports summarizing test method and results.

7. When, in Construction Manager's and Engineer's opinion, the integrated facility operates as specified and is accepted as to conforming to Contract requirements. Such acceptance will be evidenced by Construction Manager's and Engineer's signature on Facility Commissioning Report.

3.12 TRAINING

A. All components, systems, or subsystems require separate training by the manufacturer.

B. Training for each component, system, or subsystem shall be a minimum of 4 hours if no specific requirements are described in the individual specification sections.

C. All training shall be requested at least 14 days in advance of proposed training date.
   1. Proposed training shall be requested by the Contractor in an acceptable format including the following information as a minimum:
      a. Description of training.
      b. Name and contact information of trainer.
      c. Location of training.
      d. Proposed date.
      e. Alternative dates (if applicable).
      f. Proposed start time.
      g. Proposed duration.
      h. Proposed detailed agenda including topics, times, breaks, etc.

D. All training shall be scheduled through the Construction Manager.

E. If suitable training facilities are not available at the Facility, Contractor shall arrange and pay for training offsite.

3.13 FACILITY ACCEPTANCE TEST

A. The Facility Acceptance Test, commencing immediately upon completion of the performance tests, shall be a 7-day operational run of the completed systems demonstrating that all portions of the facility operate continuously as intended.

B. All aspects of the Work and all Project facilities must be functional and operate in automatic mode 24 hours per day, 7 days per week during the acceptance test at varying flow rates established by the Construction Manager.

C. Unless indicated otherwise, if any item fails or malfunctions during the test, the item shall be repaired, and the test restarted at time zero with no credit given for the operating time before the aforementioned failure or malfunction. Malfunctions meeting all of the following conditions, in the opinion of the Owner/Construction Manager, will not be considered grounds for restarting the test at time zero:
   1. Malfunctions that do not cause any interruption of the continuous operation of any other components, subsystems, systems, and equipment during the acceptance test.
   2. Malfunctions that are corrected without causing or requiring any components, subsystems, systems, and equipment to cease operations during the acceptance.

3. Malfunctions that are corrected properly and permanently, in the opinion of the Owner and Construction Manager, within 4 hours of the time the malfunction is detected (the 4-hour period includes the time required to locate the cause of the malfunction and shall begin upon Contractor's notification from the Construction Manager that a malfunction exists and shall end when the item is corrected, and the system is successfully placed back into operation).

D. Time lost during the test for equipment repairs, wiring corrections, control point settings, or other reasons that are not determined by the Construction Manager to be grounds to restart the test shall be justifiable cause for extending the test duration by an amount of time equal to the time required to repair the problems.

E. Operation of the system for the acceptance test shall be conducted on a schedule or plan of operations developed by the JTG and supported by Contractor as specified. The Contractor shall provide personnel to operate the Work and support said testing activities to be performed jointly with the Construction Manager in accordance with a test plan prepared by the JTG.

F. During the test, furnish the services of authorized representatives of the manufacturers, in addition to those services required in support of other testing, as necessary, to correct faulty equipment operation, calibration, adjustment, or related flaws.

G. Contractor's acceptance test personnel shall include qualified representatives for the electrical and instrumentation crews as indicated for Acceptance Testing.

H. The Contractor's warranty period.

3.14 WITNESSING AND SUPERINTENDENCE

A. The Engineer, Owner, Construction Manager, and others as necessary shall be allowed to witness all testing conducted during any phase of startup.

B. The Contractor shall maintain overall superintendence of the Work during all phases of startup.

C. The Contractor shall promptly and permanently repair damage to any portion of the Work during startup and testing.

D. All repair work shall be performed by the manufacturer or with manufacturer's approved published methods.

E. The Contractor shall perform all scheduled maintenance in strict compliance with manufacturers' published procedures and with products acceptable to manufacturers.

F. Authorized representatives of equipment suppliers or manufacturers shall certify that all corrective actions for all defects, malfunctions, faulty equipment operation, calibration, adjustment, or related flaws are complete and acceptable.

G. The Contractor shall keep on 24-hour local standby and provide all crews, materials, and equipment required to repair, replace adjust, balance, modify and provide other services as may be required to immediately correct all failures or malfunctions of any kind.

END OF SECTION

THIS PAGE INTENTIONALLY LEFT BLANK

SECTION 01 99 90

REFERENCE FORMS

PART 1 FORMS

1.01 DESCRIPTION

A. The forms listed below and included in this section are referenced from other sections of the project manual. Even if the forms are not referenced in other sections, they shall be used where appropriate. For the most part, the forms are self explanatory.

Form No.	Title
01 33 00-A	Submittal Transmittal Form
01 45 20-A	Equipment Test Report Form
01 78 23-A	Operation and Maintenance Transmittal Form
01 78 23-B	Equipment Record Form
01 78 23-C	Equipment Record Form
09 90 00-A	Coating System Inspection Checklist
26 05 00-A	Wire and Cable Resistance Test Data Form
26 05 00-B	Installed Motor Test Data Form
26 05 00-C	Dry Transformer Test Data Form
26 05 00-D	Motor Control Center Test Form
26 05 00-G	Protective Relay Test Form
26 05 00-K	Automatic Transfer Switch Test Form
26 05 00-L	Neutral Grounding Resistor Test
40 61 13-A	Loop Wiring and Insulation Resistance Test Data Form
40 61 13-B	Control Circuit Piping Leak Test Form
40 61 13-C	Controller Calibration Test Data Form
40 61 13-D	Panel Indicator Calibration Test Data Form
40 61 13-E	Recorder Calibration Test Data Form
40 61 13-F	Signal Trip Calibration Test Data Form
40 61 13-G	Field Switch Calibration Test Data Form
40 61 13-H	Transmitter Calibration Test Data Form
40 61 13-I	Miscellaneous Instrument Calibration Test Data Form
40 61 13-J	Individual Loop Test Data Form
40 61 13-K	Loop Commissioning Test Data Form
43 05 11-A	Manufacturer's Installation Certification Form
43 05 11-B	Manufacturer's Instruction Certification Form
43 05 11-C	Unit Responsibility Certification Form
43 05 13-A	Rigid Equipment Mount Installation Inspection Checklist
43 05 21-A	Motor Data Form

01 33 00-A. SUBMITTAL TRANSMITTAL FORM

Submittal Transmittal

Submittal Description:	Submittal No:	Spec Section:

	Routing	Sent	Received
City:	Contractor/CM		
Project:	CM/Engineer		
	Engineer/CM		
Contractor:	CM/Contractor		

We are sending you:
☐ Attached
☐ Under separate cover via _____
☐ Submittals for review and comment
☐ Product data for information only

Remarks: _____

Item	Copies	Date	Section No.	Description	Review action[a]	Reviewer initials	Review comments attached

[a]Note: NET = No exceptions taken; MCN = Make corrections noted; A&R = Amend and resubmit; R = Rejected
Attach additional sheets if necessary.

Contractor

Certify either a or b:

a. ☐ We have verified that the material or equipment contained in this submittal meets all the requirements, including coordination with all related work, specified (no exceptions).

b. ☐ We have verified that the material or equipment contained in this submittal meets all the requirements specified except for the attached deviations.

No.	Deviation

Certified by:

Contractor's Signature:

01 45 20-A. EQUIPMENT TEST REPORT FORM

NOTE: This example equipment test report is provided for the benefit of the Contractor and is not specific to any piece of equipment to be installed as a part of this project. The example is furnished as a means of illustrating the level of detail required for the preparation of equipment test report forms for this project.

City Of Sample

Example Water Treatment Plant

Stage IV Expansion Project

ABC Construction Company, Inc., General Contractor
XYZ Engineering, Inc., Engineer

Equipment Test Report

- Equipment Name: Sludge Pump 2
- Equipment Number: P25202
- Specification Ref: 11390
- Location: East Sedimentation Basin Gallery

	Contractor		Engineer	
	Verified	Date	Verified	Date
A. Preoperational Checklist				
1. Mechanical				
a. Lubrication				
b. Alignment				
c. Anchor bolts				
d. Seal water system operational				
e. Equipment rotates freely				
f. Safety guards				
g. Valves operational				
h. Hopper purge systems operational				
i. Sedimentation tank/hopper clean				
j. O&M manual information complete				
k. Manufacturer's installation certificate complete				
2. Electrical (circuit ring-out and high-pot tests)				
a. Circuits:				
1) Power to MCC 5				
2) Control to HOA				
3) Indicators at MCC:				
a) Red (running)				
b) Green (power)				
c) Amber (auto)				
4) Indicators at local control panel				
b. Wiring labels complete				
c. Nameplates:				
1) MCC				

	Contractor		Engineer	
	Verified	Date	Verified	Date
2) Control station				
3) Control panel				
d. Equipment bumped for rotation				
3. Piping Systems				
a. Cleaned and flushed:				
1) Suction				
2) Discharge				
b. Pressure tests				
c. Temporary piping screens in place				
4. Instrumentation and Controls				
a. Flowmeter FE2502F calibration				
1) Calibration Report No.				
b. Flow recorder FR2502G calibrated against transmitter				
c. VFD speed indicator calibrated against independent reference				
d. Discharge overpressure shutdown switch calibration				
e. Simulate discharge overpressure Shutdown				
B. Functional Tests				
1. Mechanical				
a. Motor operation temperature satisfactory				
b. Pump operating temperature satisfactory				
c. Unusual noise, etc?				
d. Pump operation: 75 gpm/50 psig				
(1) Measurement:				
(a) Flow:				
(b) Pressure:				
(c) Test gage number:				
e. Alignment hot				
f. Dowelled in				
g. Remarks:				
2. Electrical				
a. Local switch function:				
1) Runs in HAND				
2) No control power in OFF				
3) Timer control in AUTO				
b. Overpressure protection switch PS2502C functional in both HAND and AUTO				
c. Overpressure protection switch PS2502C set at 75 psig				
d. PLC 2500 set at 24-hour cycle, 25 min ON				

	Contractor		Engineer	
	Verified	Date	Verified	Date
C. Operational Test				
1. 48-hour continuous test. Pump cycles as specified, indicators functional, controls functional, pump maintains capacity, overpressure protection remains functional, hour meter functional				

RECOMMENDED FOR BENEFICIAL OCCUPANCY:

Engineer	Date

ACCEPTED FOR BENEFICIAL OCCUPANCY

City's Representative	Date

01 78 23-A. OPERATION AND MAINTENANCE TRANSMITTAL FORM

Date:	Submittal No:
To:	Contract No:
	Spec. Section:
	Submittal Description:
Attention:	From:

Checklist	Contractor		Engineer	
	Satisfactory	N/A	Accept	Deficient
1. Table of contents				
2. Equipment record forms				
3. Manufacturer information				
4. Vendor information				
5. Safety precautions				
6. Operator prestart				
7. Start-up, shutdown, and postshutdown procedures				
8. Normal operations				
9. Emergency operations				
10. Operator service requirements				
11. Environmental conditions				
12. Lubrication data				
13. Preventive maintenance plan and schedule				
14. Troubleshooting guides and diagnostic techniques				
15. Wiring diagrams and control diagrams				
16. Maintenance and repair procedures				
17. Removal and replacement instructions				
18. Spare parts and supply list				
19. Corrective maintenance man-hours				
20. Parts identification				
21. Warranty information				
22. Personnel training requirements				
23. Testing equipment and special tool information				

Remarks:

Contractor's Signature :

01 78 23-B. EQUIPMENT RECORD FORM

Equip Descrip		Equip Loc	
Equip No.	Shop Dwg No.	Date Inst	Cost
Mfgr		Mfgr Contact	
Mfgr Address			Phone
Vendor		Vendor Contact	
Vendor Address			Phone

Maintenance Requirements	D	W	M	Q	S	A	Hours

Lubricants: Recommended:

Alternative:

Misc. Notes:

Recommended Spare Parts					Electrical Nameplate Data			
Part No	Quan	Part Name	Cost		Equip			
					Make			
					Serial No.		Id No.	
					Model No.		Frame No.	
					Hp	V	Amp	Hz
					Ph	Rpm	Sf	Duty
					Code	Insl. Cl	Des	Type
					Nema Des	C Amb	Temp Rise	Rating
					Misc.			
					Mechanical Nameplate Data			
					Equip			
					Make			
					Serial No.		Id No.	
					Model No.		Frame No.	
					Hp	Rpm	Cap	Size
					Tdh	Imp Sz	Belt No.	Cfm
					Psi	Assy No.	Case No.	
					Misc			

01 78 23-C. EQUIPMENT RECORD FORM

Equip Descrip		Equip Loc	
Equip No.	Shop Dwg No.	Date Inst	Cost
Mfgr		Mfgr Contact	
Mfgr Address			Phone
Vendor		Vendor Contact	
Vendor Address			Phone

Maintenance Requirements	D	W	M	Q	S	A	Hours

09 90 00-A COATING SYSTEM INSPECTION CHECKLIST

Project Name			
City		Coating System Manufacturer (CSM)	
General Contractor (GC)		Coating System Applicator (CSA)	
Area or Structure		Location within Structure	
Coating System (eg E-1)		Coating Type (eg Epoxy, etc.)	

Coating System Inspection Checklist

Step	Description		Name	Signature	Date
1	Completion of cleaning and substrate decontamination prior to abrasive blast cleaning.	GC QC			
		CSM QC			
		CSA QC			
2	Installation of protective enclosure of structure or area and protection of adjacent surfaces or structures that are not to be coated.	GC QC			
		CSM QC			
		CSA QC			
3	Completion of ambient condition control in structure or building area and acceptance of ventilation methods in structure or Area.	GC QC			
		CSM QC			
		CSA QC			
4	Completion of Surface Preparation for Substrates to Be Coated.	GC QC			
		CSM QC			
		CSA QC			
5	Completion of Primer Application.	GC QC			
		CSM QC			
		CSA QC			
6	Completion of Concrete Repairs If Required and Related Surface Preparation Rework Prior to Coating System Application.	GC QC			
		CSM QC			
		CSA QC			
7	Completion of Concrete Filler/ Surface Application to Concrete.	GC QC			
		CSM QC			
		CSA QC			
		GC QC			
		CSM QC			

Coating System Inspection Checklist

Step	Description		Name	Signature	Date
8	Completion of First Finish Coat Application and of Detail Treatment at Transitions or Terminations.	CSA QC			
9	Completion of Second Finish Coat Application and of Detail Treatment at Transitions and Terminations.	GC QC			
		CSM QC			
		CSA QC			
10	Completion of Full and Proper Cure of Coating System.	GC QC			
		CSM QC			
		CSA QC			
11	Completion of Testing of Cured Coating System including Adhesion, Holiday (Continuity) Testing and Dry Film Thickness.	GC QC			
		CSM QC			
		CSA QC			
12	Completion of Localized Repairs to Coating System Following Testing.	GC QC			
		CSM QC			
		CSA QC			
13	Final Acceptance of Coating System Installation Including Final Clean-Up Complying with Specification Requirements and the CSM's Quality Requirements.	GC QC			
		CSM QC			
		CSA QC			

26 05 00-A. WIRE AND CABLE RESISTANCE TEST DATA FORM

Wire or Cable No.:_____ Temperature, ºF: _____

Location of Test	Insulation resistance, megohms
1.	
2.	
3.	
4.	
5.	
6.	
7.	

.

CERTIFIED _____ Date _____

Contractor's Representative

WITNESSED _____ Date _____

City's Representative

26 05 00-B. INSTALLED MOTOR TEST DATA FORM

Motor Equipment Number: _____ Date of test: _____

Equipment Driven: _____

MCC Location: _____

				Ambient temp	ºF
Resistance:					
Insulation resistance phase-to-ground megohms:					
Phase A		Phase B		Phase C	
Current at Full Load:					
Phase			Current, amps		
Phase			Current, amps		
Phase			Current, amps		
Thermal Overload Device:	Manufacturer/catalog #			Amperes	
Circuit breaker (MCP) setting:					

Motor Nameplate Markings:

Mfr		Mfr Model		Frame		HP	
Volts		Phase		RPM		Service factor**	
Amps		Freq		Ambient temp rating			ºC
Time rating				Design letter**			
	(NEMA 1-10.35)				(NEMA MG-1.16)		
Code letter				Insulation class			

**Required for 3-phase squirrel cage induction motors only.

CERTIFIED _____ Date _____

Contractor's Representative

WITNESSED _____ Date _____

City's Representative

26 05 00-C. DRY TRANSFORMER TEST DATA FORM

(Note: Use Data Form for dry type transformers with voltage rating of 600 Vac or less and sizes to 167 kVA single phase and 500 kVA three phase. Use NETA Test Forms and Test Procedures for higher voltages and larger transformers.)

Equipment Tag No.: _____ Temperature Rating: _____

Description/Location: _____ Feeder size/Source: _____

Primary Voltage: _____ Secondary Voltage: _____ Winding Connection: _____

A. VISUAL INSPECTION

Transformer Inspection	Pass	Fail	Note
1. Nameplate data as specified			
2. Mechanical condition			
a. Free of dents and scratches			
b. Anchored properly			
c. Shipping brackets removed			
d. Spacing from wall per nameplate			
3. Grounding *			
a. Equipment grounding			
b. System grounding			

B. INSULATION-RESISTANCE TESTS:

Perform tests with calibrated megohmeter. Apply 1000 Vdc test voltage for 60 seconds and record readings in megohms at 30-seconds and 60-seconds intervals.

Test Group	Resistance between		30-second reading	60-second reading	Absorption Ratio Index 60-sec. / 30-sec.
Primary Winding to ground	A	GRD			
	B	GRD			
	C	GRD			
Secondary Winding to ground with * N-G Bond removed	a	GRD			
	b	GRD			
	c	GRD			
Primary Winding to Secondary Winding	A	a			
	B	b			
	C	c			

Submit resistance readings to the Engineer immediately after the tests that are less than the manufacturer's recommended value or less than 10-megohms. Record the Absorption Ratio Index values for future reference. Ratio must be 1.0 or greater, with infinity (∞) equal to 1.0.

Contractor Representative Certified: _____ Date _____

City Representative Witnessed:_____ Date _____

26 05 00-D. MOTOR CONTROL CENTER TEST FORM

Equipment No.: _____ Ambient room temperature: _____

Location: _____

A. MECHANICAL CHECK:

All bolted connections either bus to bus or cable to bus shall be torqued to the manufacturer's recommendations.

B. ELECTRICAL TESTS:

1. Measure insulation resistance of each bus section phase to phase and phase to ground for 1 minute using a megohmmeter at 1000 volts.

Test results (megohms)			
Phase		Phase	
A-GRD		A-B	
B-GRD		B-C	
C-GRD		C-A	

2. Set the circuit breaker in the starter unit to comply with the requirements of NEC, Article 430-52 and Table 430-152.

3. Motor overload heater elements shall be sized and installed based on the actual nameplate full load amperes of the motor connected to the starter.

CERTIFIED _____ Date _____

Contractor's Representative

WITNESSED _____ Date _____

City's Representative

26 05 00-G. PROTECTIVE RELAY TEST FORM

Location: _____

Switchgear Breaker No.: _____

Protective Relay Description: _____

The protective relays shall be tested in the following manner:

1. Each protective relay circuit shall have its insulation resistance tested to ground.
2. Perform the following tests on the specified relay setting:
   a. Pickup parameters on each operating element.
   b Timing test shall be performed at three points on the time dial curve.
   c. Pickup target and seal-in units.

The results shall be recorded and signed. A copy shall be given to the Engineer in accordance with paragraph 26 05 00-1.05 Corrosive Areas.

26 05 00-K. AUTOMATIC TRANSFER SWITCH TEST FORM

Equipment Number: _____

Location: _____

Date: _____

1. Perform an insulation resistance test (1000 volts DC for 1 minute):

Phase	A		B		C		
Pole to ground							megohms
Pole to pole	AB		BC		CA		megohms

2. Perform the following operations and initial:
   a. Manual transfer _____
   b. Loss of normal power; _sec delay
   c. Return to normal power; _____sec delay

The results shall be recorded and signed. A copy shall be given to the Engineer in accordance with paragraph 26 05 00-2.06 Product Data.

CERTIFIED _____ Date _____

Contractor's Representative

WITNESSED _____ Date _____

City's Representative

26 05 00-L. NEUTRAL GROUNDING RESISTOR TEST

Equipment No.: _____

Location: _____

The pickup and time delay setting on the ground fault relay shall be set in accordance with Section 26 05 74.

1. The transformer neutral insulation resistance shall be measured with and without the grounding resistor connected to insure no parallel ground paths exist.
2. The protective relay pickup current shall be determined by injecting test current into the current sensor. The pickup current should be within 10 percent of the dial setting. Record the dial setting and actual pickup tie.
3. The relay timing shall be tested by injecting 150 and 300 percent of pickup current into the current sensor. The relay timing shall be in accordance with the manufacturer's published time-current characteristic curves. Record the relay timing at 150 and 300 percent of pickup current.
4. The circuit interrupting device shall be operated by operating the relay.

The results shall be recorded and signed by the Contractor and Engineer. A copy shall be given to the Engineer in accordance with paragraph 26 05 00-2.06 Product Data.

40 61 13-A. LOOP WIRING AND INSULATION RESISTANCE TEST DATA FORM

Loop No.: _____

List all wiring associated with a loop in table below. Make applicable measurements as indicated after disconnecting wiring.

Wire No.	Panel Tie	Field TB	Continuity Resistance[a]		Insulation Resistance[b]			
			Cond./ Cond.	Cond./ Shield	Shield/ Gnd.	Shield/ Cond.	Cond./ Gnd.	Shield/ Shield
A			--	(A/SH)				
B			(A/B)	--				
C			(A/C)	--				
D			(A/D)	--				
etc.								

NOTES:

a. Continuity Test. Connect ohmmeter leads between wires A and B and jumper opposite ends together. Record resistance in table. Repeat procedure between A and C, A and D, etc. Any deviation of ±2 ohms between any reading and the average of a particular run indicates a poor conductor, and corrective action shall be taken before continuing with the loop test.

b. Insulation Test. Connect one end of a 500 volt megger to the panel ground bus and the other sequentially to each completely disconnected wire and shield. Test the insulation resistance and record each reading.

CERTIFIED _____ Date _____

Contractor's Representative

WITNESSED _____ Date _____

City's Representative

40 61 13-B. CONTROL CIRCUIT PIPING LEAK TEST FORM

Loop No.:_____

List tubing associated with loop in table below. Make applicable measurements after isolating any air consuming pilots from circuit.

Tube No.	Tubing Equivalent Length of 1/4-Inch Copper[a]	Test Period (seconds)	Permitted Pressure Drop (psi)[b]	Measured Pressure Drop (psi)
A				
B				
C				
D				
etc.				

NOTES:

a. Convert actual tubing and air motor volume to equivalent 1/4-inch copper tubing.

b. Pressure drop shall not exceed 1 psi per hundred feet 1/4-inch tubing per 5 seconds.

CERTIFIED _____ Date _____

Contractor's Representative

WITNESSED _____ Date _____

City's Representative

40 61 13-C. CONTROLLER CALIBRATION TEST DATA FORM

Tag No. and Description: _____

Make & Model No.: _____ Serial No.: _____

Input: _____ Process Variable (PV) Scale: _____

Output: _____ Output Scale: _____

PV Scale Calibration

% of Range	Input	Expected Reading	Actual Reading	% Deviation
0				
50				
100				
			% Deviation Allowed:	

Connect output to PV for following tests:

Set Point (SP) Indicator Accuracy			Output Meter Accuracy			Controller Accuracy		
SP	PV Reading	Expected % Dev.	Actual Reading	Expected Reading	Actual % Dev.	OUTPUT	OUTPUT	% Dev.
(0%)								
(50%)								
(100%)								
% Deviation Allowed:			% Deviation Allowed:			% Deviation Allowed:		

CERTIFIED _____ Date _____

Contractor's Representative

WITNESSED _____ Date _____

City's Representative

40 61 13-D. PANEL INDICATOR CALIBRATION TEST DATA FORM

Tag No. and Description: _____

Make & Model No.:_____ Serial No.:_____

Input: _____

Scale: _____ Range: _____

PV Scale Calibration

% of Range	Input	Expected Reading	Actual Reading	% Deviation
0				
50				
100				
			% Deviation Allowed:	

CERTIFIED _____ Date _____

Contractor's Representative

WITNESSED _____ Date _____

City's Representative

40 61 13-E. RECORDER CALIBRATION TEST DATA FORM

Tag No. and Description: _____

Make & Model No.: _____ Serial No.: _____

Input: _____ Chart: _____

Scale: _____ Range: _____

% of Range	Input	Expected Reading	Actual Reading	% Deviation
0				
50				
100				
			% Deviation Allowed:	

CERTIFIED _____ Date _____

Contractor's Representative

WITNESSED _____ Date _____

City's Representative

40 61 13-F. SIGNAL TRIP CALIBRATION TEST DATA FORM

Tag No. and Description: _____

Make & Model No.: _____ Serial No.: _____

Input: _____

Scale: _____ Range: _____

Set Point(s): _____

After setting set point(s), run signal input through entire range and calculate deadband.

Set Point	Incr. Input Trip Point	Decr. Input Trip Point	Calc. Deadband	Required Deadband

CERTIFIED _____ Date _____

Contractor's Representative

WITNESSED _____ Date _____

City's Representative

40 61 13-G. FIELD SWITCH CALIBRATION TEST DATA FORM

Tag No. and Description: _____

Make & Model No.: _____ Serial No: _____

Input: _____

Range: _____

Set Point(s): _____

Simulate process variable (flow, pressure, temperature, etc.) and set desired set point(s). Run through entire range of switch and calculate deadband.

Set Point	Incr. Input Trip Point	Decr. Input Trip Point	Calc. Deadband	Required Deadband

CERTIFIED _____ Date _____

Contractor's Representative

WITNESSED _____ Date _____

City's Representative

40 61 13-H. TRANSMITTER CALIBRATION TEST DATA FORM

Tag No. and Description: _____

Make & Model No.: _____ Serial No.: _____

Input: _____

Output: _____

Range: _____ Scale: _____

Simulate process variable (flow, pressure, temperature, etc.) and measure output with appropriate meter.

% of Range	Input	Expected Reading	Actual Reading	% Deviation
0				
50				
100				
			% Deviation Allowed:	

CERTIFIED _____ Date _____

Contractor's Representative

WITNESSED _____ Date _____

City's Representative

40 61 13-I. MISCELLANEOUS INSTRUMENT CALIBRATION TEST DATA FORM

(For instruments not covered by any of the preceding test forms, the Contractor shall create a form containing all necessary information and calibration procedures.)

CERTIFIED _____ Date _____

Contractor's Representative

WITNESSED _____ Date _____

City's Representative

40 61 13-J. INDIVIDUAL LOOP TEST DATA FORM

Loop No.: _____

Description: (Give complete description of loop's function using tag numbers where appropriate.)

P&ID No.: (Attach copy of P&ID.)

a. Wiring tested:

(Attach test form 40 61 13-A)

b. Instrumentation tubing/piping tested:

(Attach test form 40 61 13-B)

c. Instruments calibrated:

(Attach test forms 40 61 13-C through I)

d. List step-by-step procedures for testing loop parameters. Test loop with instruments, including transmitters and control valves, connected and functioning. If it is not possible to produce a real process variable, then a simulated signal may be used with the Engineer's approval.

CERTIFIED _____ Date _____

Contractor's Representative

WITNESSED _____ Date _____

City's Representative

40 61 13-K. LOOP COMMISSIONING TEST DATA FORM

Loop No.: _____

a. Loop tested:

(Attach test form 40 61 13-J)

b. Controlled or connected equipment tests confirmed:

c. Give complete description of loop's interface with process.

d. With associated equipment and process in operation, provide annotated chart trace of loop response to changes in set points for verification of performance. This chart should demonstrate 1/4-amplitude damping as output adjusts to set point change. Show set points, starting and finishing times on chart, as well as any other pertinent data.

Connect 2-pen recorder to process variable (PV) and to controller output. Use 1 inch/second chart speed.

Pen 1 - PV - Connections:

Pen 2 - Output - Connections:

CERTIFIED _____ Date _____

Contractor's Representative

WITNESSED _____ Date _____

City's Representative

43 05 11-A. MANUFACTURER'S INSTALLATION CERTIFICATION FORM

Contract No:	Specification section:
Equipment name:	
Contractor:	
Manufacturer of equipment item:	

The undersigned manufacturer of the equipment item described above hereby certifies that he has checked the installation of the equipment and that the equipment, as specified in the project manual, has been provided in accordance with the manufacturer's recommendations, and that the trial operation of the equipment item has been satisfactory.

Comments:

Manufacturer	Contractor
Signature of Authorized Representative	Signature of Authorized Representative
Date	Date

43 05 11-B. MANUFACTURER'S INSTRUCTION CERTIFICATION FORM

Contract No:	Specification Section:
Equipment name:	
Contractor:	
Manufacturer of equipment item:	

The undersigned manufacturer certifies that a service engineer has instructed the wastewater treatment plant operating personnel in the proper maintenance and operation of the equipment designated herein.

Operations Check List (check appropriate spaces)	
Start-up procedure reviewed	
Shutdown procedure reviewed	
Normal operation procedure reviewed	
Others:	

Maintenance Check List (check appropriate spaces)	
Described normal oil changes (frequency)	
Described special tools required	
Described normal items to be reviewed for wear	
Described preventive maintenance instructions	
Described greasing frequency	
Others:	

Manufacturer	Signature of Contractor Representative Date
Signature of Authorized Representative	
Date	Signature of Authorized Representative Date

43 05 11-C. UNIT RESPONSIBILITY CERTIFICATION FORM

[PROJECT TITLE]

CERTIFICATE OF UNIT RESPONSIBILITY

FOR SPECIFICATION SECTION _____

_____

[SECTION TITLE]

In accordance with Section 43 05 11-1.02 Unit Responsibility of the contract documents, the undersigned manufacturer of driven equipment ("manufacturer") accepts unit responsibility for all components of equipment furnished to the Project under specification Section_____ ,_and for related equipment manufactured under sections_____, _____, and _____ .

We have reviewed the requirements for sections 43 05 11 and 43 23 03 where applicable) and all sections referencing this (these) section(s), including but not limited to drivers, supports for driving and driven equipment and all other specified appurtenances to be furnished to the Project by manufacturer. And, we have further reviewed, and modified as necessary, the requirements for associated variable speed drives and motor control centers. We hereby certify that all specified components are compatible and comprise a functional unit suitable for the specified performance and design requirements whether or not the equipment was furnished by us. We will make no claim nor establish any condition that problems in operation for the product provided under this specification Section _____ are due to incompatibility of any components covered by this Certificate of Unit Responsibility. Nor will we condition or void any warranty for the performance of the product of this specification Section _____ due to incompatibility of any components covered under this Certificate of Unit Responsibility.

Our signature on this Certificate of Unit Responsibility does not obligate us to take responsibility for, nor to warrant the workmanship, quality, or performance of related equipment provided by others under specification sections _____, _____, and _____. Our obligation to warranty all equipment provided by us shall remain unaffected.

Notary Public	Name of Corporation
Commission expiration date	Address
Seal:	By:
	Duly Authorized Official
	Legal Title of Official
	Date

43 05 13-A. RIGID EQUIPMENT MOUNT INSTALLATION CHECKLIST

[CLIENT, PROJECT NAME]

Equipment Tag No.: _____ Date: _____

Grout Product Name and Type: _____

Grouting System Manufacturer: _____

Grouting Application Contractor: _____

General Contractor: _____

Step 1: Verify Equipment Anchor Installation Conformance to Equipment Pad Details		
Name: Contractor Rep.		Date
Name: Engineer		Date
Name: Millwright		Date
Step 2: Completion of Cleaning and Concrete Substrate Preparation Prior to Grouting		
Name: Contractor Rep.		Date
Name: Engineer		Date
Name: Grouting Contractor Rep.		Date
Name: Grout Manufacturer's Technical Rep.		Date
Step 3: Equipment Leveling		
Name: Contractor Rep.		Date
Name: Engineer		Date
Name: Millwright		Date
Step 4: Installation of Protection of Adjacent Surfaces or Structures NOT TO BE GROUTED		
Name: Contractor Rep.		Date
Name: Engineer		Date
Name: Grouting Contractor Rep.		Date
Name: Grout Manufacturer's Technical Rep.		Date
Step 5: Preparation and Construction of Forms and Epoxy Grout Filling Standpipes		
Name: Contractor Rep.		Date
Name: Engineer		Date
Name: Grouting Contractor Rep.		Date
Name: Grout Manufacturer's Technical Rep.		Date
Step 6: Completion of Ambient Condition Control in Structure or Building Area and Acceptance of Ambient Conditions as They Apply to Application and Curing Requirements for the Grouting System		
Name: Contractor Rep.		Date
Name: Engineer		Date
Name: Grouting Contractor Rep.		Date
Name: Grout Manufacturer's Technical Rep.		Date
Step 7: Epoxy Grout Installation		
Name: Contractor Rep.		Date
Name: Engineer		Date
Name: Grouting Contractor Rep.		Date
Name: Grout Manufacturer's Technical Rep.		Date

Step 8: Completion of Full and Proper Cure of Epoxy Grout		
Name: Contractor Rep.		Date
Name: Engineer		Date
Name: Grouting Contractor Rep.		Date
Name: Grout Manufacturer's Technical Rep.		Date
Step 9: Completion of Localized Repair of Grout Voids		
Name: Contractor Rep.		Date
Name: Engineer		Date
Name: Grouting Contractor Rep.		Date
Name: Grout Manufacturer's Technical Rep.		Date
Step 10: Final Acceptance of Grouting System Installation Including Final Clean-Up of the Work Site Complying with All Specification Requirements and the GSM's Quality Requirements		
Name: Contractor Rep.		Date
Name: Engineer		Date
Name: Grouting Contractor Rep.		Date
Name: Grout Manufacturer's Technical Rep.		Date

43 05 21-A. MOTOR DATA FORM

Equipment Name: _____ Equipment No(s): _____

Project Site Location: _____

Nameplate Markings

Mfr:		Mfr Model:		Frame:		Horsepower:	
Volts:		Phase:		RPM:		Service Factor:	
FLA:		LRA:		Frequency:		Amb Temp Rating:	ºC

Time rating:		Design Letter:	
	(NEMA MG1-10.35)		(NEMA MG-1.16)
KVA Code Letter:		Insulation Class:	

The following information is required for explosion-proof motors only:

A. Approved by UL for installation in Class _____, Div _____, Group _____
B. UL frame temperature code ____ (NEC Tables 500-8B)

The following information is required for all motors 1/2 horsepower and larger:

A. Guaranteed minimum efficiency _____

(Section 43 05 21-2.04 Motor Efficiency)

B. Nameplate or nominal efficiency _____

Data Not Necessarily Marked on Nameplate

Type of Enclosure:			Enclosure Material:		
Temp Rise:		ºC (NEMA MG1-12.41,42)			
Space Heater included?	☐ Yes	☐ No	If Yes:	Watts	Volts
Type of motor winding over-temperature protection, if specified:					

Provide information on other motor features specified:

_____

THIS PAGE INTENTIONALLY LEFT BLANK

SECTION 03 11 00
CONCRETE FORMING

PART 1 GENERAL

1.01 DESCRIPTION

A. Formwork requirements for concrete construction.

1.02 QUALITY ASSURANCE

A. References:
1. The references listed below are part of this section. Where a referenced document cites other standards, such standards are included as references under this section as if referenced directly. In the event of conflict, the requirements of this section shall prevail.

Reference	Title
ACI 117	Tolerances for Concrete Construction and Materials
ACI 301	Specifications for Structural Concrete
ACI 318	Building Code Requirements for Structural Concrete
ACI 350	Code Requirements for Environmental Engineering Concrete Structures
ACI 350.5	Specifications for Environmental Concrete Structures
National Institute of Standards - PS1	Construction and Industrial Plywood

B. Design – General:
1. Provide design of formwork, shoring and reshoring systems by the Contractor's Professional Civil Engineer or Structural Engineer currently registered in the State of California.
2. Design, engineering, and construction of formwork, shoring, and reshoring systems is the responsibility of the Contractor.
3. Develop a procedure for removal of shores (and installation of reshores).
4. Structural record calculations, signed and sealed by the Contractor's Engineer, are required to prove that all portions of the structure, in combination with the remaining forming and shoring systems, have sufficient strength to safely support their own weight plus the loads placed thereon.
5. When developing procedures, schedules, and structural calculations; consider the structural system that exists, effects of imposed loads, and the strength of concrete at each stage of construction.

C. Design Criteria:
1. Design formwork in accordance with ACI 301 and ACI 318 for building structures and ACI 350 and 350.5 for environmental structures to provide concrete finishes as specified in Section 03 30 00.

2. Design systems for full height of wet concrete pressure.
3. Design formwork to limit maximum deflection of form facing materials, as reflected in concrete surfaces exposed to view, to 1/240 of span.

1.03 SUBMITTALS

A. Action Submittals:
1. Procedures: Section 01 33 00.
2. Manufacturer's product data with installation instructions:
a. Form materials.
b. Form ties (with waterstops).
c. Form release compound.
d. Void forms.

B. Informational Submittals:
1. Procedures: Section 01 33 00.
2. Letter of certification:
a. Stating that formwork has been designed in accordance with this specification and referenced documents, sealed and stamped by the Contractor's registered design engineer.

PART 2 PRODUCTS

2.01 FORMS

A. Wood Forms:
1. Provide new and unused exterior grade plywood panels manufactured in accordance with American Plywood Association (APA).
a. Forms for concrete surfaces exposed to view: use APA High Density Overlay (HDO) Plyform Class I Exterior 48" X 96" X 3/4".
b. Forms for other concrete surfaces: use APA Douglas Fir B-B Plyform Class I Exterior 48" X 96" X 3/4-inch.
2. When approved, plywood may be reused.

B. Metal Forms:
1. Do not use aluminum. Provide forms free of rust and straight without dents to provide members of uniform thickness.

2.02 FORM TIES

A. Commercially fabricated for use in form construction. Fabricated so that ends or end fasteners can be removed without causing spalling at surfaces of the concrete. Cone on ends shall be 3/4 inch to 1-inch diameter. Provide embedded portion of tie not less than 1 1/2 inch from face of concrete after cone ends have been removed. Provide ties with integral waterstops at water-retaining and below grade structures.

B. Tapered through-bolts may be used when approved. Use 1-inch minimum diameter at the smallest end. Fill tapered tie holes after cleaning to produce watertight construction. Use a mechanical waterstop plug near the center of the wall and fill each side with non-shrink cement grout. Mechanical waterstop plug shall be Greenstreak Group, Inc. “X-Plug”; or equal.

2.03 FORM RELEASE COMPOUND

A. Coat form surfaces in contact with concrete using a non-staining, non-residual, water based, bond-breaking form coating. Use NSF approved form release agents in potable water containment structures.

PART 3 EXECUTION

3.01 PREPARATION

A. Cover surface of forms with form release compound prior to form installation in accordance with manufacturer’s recommendations.

B. Do not permit excess form coating material to stand in puddles on forms or hardened concrete surfaces against which fresh concrete is to be placed.

C. Clean surfaces of forms, reinforcing steel and other embedded items of accumulated mortar, grout, or other foreign materials from previous concreting or construction activities before concrete is placed.

3.02 FORMWORK CONSTRUCTION

A. Form vertical surfaces of cast-in-place concrete including exposed sides of footings. Earth forms may be used where conditions permit.

B. Construct and place forms so that the resulting concrete will be of the shape, lines, dimensions, and appearance indicated on the Drawings. Brace or tie forms together to maintain position and shape under the load of freshly-placed concrete.

C. Tighten forms to prevent leakage.

D. Provide temporary openings (windows) at base of column and wall forms at other points where necessary to facilitate cleaning and observation immediately before concrete is placed.

E. Place a 3/4-inch chamfer strip at corners of formed surfaces that are exposed to view.

F. At construction joints, overlap hardened concrete surface by at least 1 inch. Brace forms against hardened concrete to prevent movement, offsets, or loss of mortar at construction joint and to maintain a true surface. Where possible, locate juncture of built-in-place forms at architectural lines, control joints, or at other inconspicuous lines.

G. Construct wood forms for openings to facilitate loosening. Anchor forms so that movement of any part of the formwork system is prevented during concrete placement.

H. Provide a positive means of adjustment (wedges or jacks) at shores and struts to take up settlement during concrete placement. Brace forms against lateral deflection. Fasten in-place wedges and shims used for final adjustment of forms prior to concrete placement.

I. Place tapered through-bolt form ties with the larger end on the side of the structure in contact with liquid when possible.

3.03 TOLERANCES

A. Install formwork with tolerances in accordance with ACI 117 and the following (the more stringent requirement controls):
   1. Install formwork in accordance with manufacturer's written instructions.
   2. Vertical surface tolerance from plumb; walls, columns, piers, and risers:
      ± 1/2 inch for entire height
      ± 1/4 inch in any 10 feet of height
   3. Vertical surface tolerance from plumb; exposed wall corners, end columns, control-joint grooves, and other exposed to view vertical lines:
      ± 1/2 inch for entire height
      ± 1/4 inch in any 20 feet of height
   4. Horizontal variation from level or from grade; top of slabs, slab soffits, ceilings, and beam soffits, measured before removal of supporting shores:
      ± 3/4 inch for entire length
      ± 3/8 inch for any bay or 20-foot length
      ± 1/4 inch in any 10 feet of length
   5. Horizontal variation from level or from grade; exposed lintels, sills, parapets, horizontal grooves, and other exposed-to-view horizontal lines:
      ± 1/2 inch for entire length
      ± 1/4 inch in any 20 feet of length.
   6. Plan position variation; columns, walls, and partitions:
      ± 3/4 inch for entire length
      ± 3/8 inch for any bay or 20-foot length
   7. Plan location and size; sleeves, floor openings, walls, wall openings, beams, and columns:
      ± 1/2 inch
   8. Cross sectional dimensions; columns and beams and thickness of slabs and walls:
      ± 3/8 inch
   9. Plan dimensions; footings and foundations:
      minus 1/2 inch
      + 2 inches

10. Misplacement or eccentricity; footings and foundations:
    2 percent of footing width in direction of misplacement
    not more than 2 inches
11. Thickness; footings and foundations:
    minus 5 percent
    no limit on the maximum increase except that which may interfere with other construction.
12. Step variance in flight of stairs:
    Rise ± 1/16 inch
    Tread from level ± 1/8 inch

B. Use control points and benchmarks for reference purposes to check tolerances. Establish and maintain reference points in an undisturbed condition until final completion and acceptance of the work.

C. Regardless of tolerances listed, no portion of a structure shall extend beyond the legal boundary of work site.

D. Camber formwork to compensate for anticipated deflections in formwork under wet load of concrete. Adjust camber to maintain above specified tolerances in hardened concrete after forms and shoring are removed.

3.04 REMOVAL OF FORMS

A. Do not impose construction loads or remove shoring from any part of the structure until that portion of the structure in combination with remaining forming and shoring systems has sufficient strength to safely support its weight and loads placed thereon.

B. If forms are loosened and not removed, proceed same day with wet curing operations to soak surfaces of concrete where forms are loosened. When wet curing is not practical or not planned, loosen, remove, and start approved curing procedures on the same day.

C. When required for concrete curing in hot weather, required for repair of surface defects, or when required for finishing at an early age; remove forms as soon as concrete has hardened sufficiently to resist damage from removal operations or lack of support.

D. Remove top forms on sloping surfaces as soon as concrete has attained sufficient stiffness to prevent sagging. Make repairs or finishing treatment on such sloping surfaces immediately after form removal.

E. Remove wood forms for wall openings as soon as this can be accomplished without damage to concrete.

F. Remove formwork from columns, walls, sides of beams, and other parts not supporting weight of concrete as soon as concrete has hardened sufficiently to resist damage from removal.

G. When shores and supports are so arranged such that non-load-carrying form facing material can be removed without loosening or disturbing other shores and supports, facing material may be removed when concrete has sufficiently hardened to resist damage from removal.

H. In all cases, proceed with curing same day as form removal.

I. Where no reshoring is planned, forms and shoring used to support weight of concrete shall be left in place until concrete has attained its specified 28-day compressive strength.

3.05 RESHORING

A. Do not impose construction loads or remove shoring from any part of the structure until that portion of the structure, in combination with remaining forming and shoring systems, has sufficient strength to safely support its weight and loads placed thereon.

B. While reshoring is underway, no superimposed dead or live loads are permitted on the new construction.

C. During reshoring, do not subject concrete in structural members to combined dead and construction loads in excess of loads that the structural members can adequately support.

D. Place reshores as soon as practicable after stripping operations are complete, but in no case later than the end of working day on which stripping occurs.

E. Place reshores to carry their required loads without overstressing.

F. Where a reshoring procedure is planned, supporting formwork may be removed when concrete has reached the concrete strength specified by the formwork engineer's structural calculations and verified by field cured test cylinders or other approved method.

END OF SECTION

SECTION 03 20 00
CONCRETE REINFORCING

PART 1 GENERAL

1.01 DESCRIPTION

A. Section includes: Reinforcing steel for use in reinforced concrete.

1.02 REFERENCES:

A. The references listed below are a part of this section. Where a referenced document contains references to other standards, those documents are included as references under this section as if referenced directly. In the event of conflict between the requirements of this section and those of the listed documents, the requirements of this section shall prevail.

Reference	Title
ACI 117	Specification for Tolerances for Concrete Construction and Materials
ACI 315	Details and Detailing of Concrete Reinforcement
ACI 318	Building Code Requirements For Structural Concrete
ACI 350	Code Requirements for Environmental Engineering Concrete Structures and Commentary
ACI SP-66	ACI Detailing Manual
ASTM A615	Deformed and Plain Carbon-Steel Bars for Concrete Reinforcement
ASTM A1064	Carbon-Steel Wire and Welded Wire Reinforcement, Plain and Deformed, for Concrete
AWS D1.4	Structural Welding Code - Reinforcing Steel
CRSI-PRB	Placing Reinforcing Bars
CRSI-MSP	Manual of Standard Practice
FEDSPEC QQ-W-461H	Wire, Steel, Carbon (Round, Bare, and Coated)

1.03 SUBMITTALS

A. Action Submittals:
1. Procedures: Section 01 33 00.
2. A copy of this specification section with each paragraph check-marked to indicate specification compliance or marked to indicate requested deviations from specification requirements.
3. Check-marks (✓) shall denote full compliance with a paragraph as a whole. Deviations shall be underlined and denoted by a number in the margin to the right of the identified paragraph. The remaining portions of the paragraph not underlined will signify compliance on the part of the Contractor with the specifications. Include a detailed, written justification for each deviation. Failure to include a copy of the marked-up specification sections, along with

justification(s) for any requested deviations to the specification requirements, with the submittal shall be sufficient cause for rejection of the entire submittal with no further consideration.

4. Mill certificates of mill analysis, tensile, and bend tests for all reinforcing.
5. Manufacturer and type of proprietary reinforcing steel splices. Submit a current ICC Report, manufacturer's literature, and research reports in accordance with the San Diego Planning and Development Services Department requirements that contains instructions and recommendations for each type of coupler used.
6. Qualifications of welding operators certified by a listing agency recognized by the City of San Diego.
7. Reinforcing steel shop drawings showing reinforcing steel bar quantities, sizes, spacing, dimensions, configurations, locations, mark numbers, lap splice lengths and locations, concrete cover and reinforcing steel supports. Reinforcing steel shop drawings shall be of sufficient detail to permit installation of reinforcing steel without reference to the contract drawings. Shop drawings shall not be prepared by reproducing the plans and details indicated on the contract drawings but shall consist of completely redrawn plans and details as necessary to indicate complete fabrication and installation of reinforcing steel, including large scale drawings at joints detailing bar placement in congested areas. Placement drawings shall be in accordance with ACI 315. Reinforcing details shall be in accordance with ACI SP-66.

1.04 DELIVERY, STORAGE AND HANDLING

A. Ship reinforcing steel to the jobsite with attached plastic or metal tags having permanent mark numbers which match the shop drawing mark numbers. All reinforcing shall be supported and stored above ground. Use only plastic tags secured to the reinforcing steel bars with nylon or plastic tags for epoxy coated reinforcing steel bars.

PART 2 PRODUCTS

2.01 BAR REINFORCEMENT

A. Reinforcing steel bars shall be deformed billet steel in conformance with ASTM A615, Grade 60.

2.02 WIRE FABRIC

A. Wire fabric shall be welded steel mesh conforming to ASTM A1064.

2.03 WIRE AND PLAIN BARS

A. Wire used as reinforcement and bars used as spiral reinforcement in structures shall be cold drawn steel conforming to ASTM A1064.

2.04 SMOOTH DOWEL BARS

A. Smooth dowel bars shall conform to ASTM A615, Grade 60, with a metal end cap at the greased or sliding end to allow longitudinal movement.

2.05 REINFORCING STEEL MECHANICAL SPLICES

A. Reinforcing steel mechanical splices shall be a positive connecting threaded type mechanical splice system manufactured by Erico, Inc., Dayton Superior, Williams Form Engineering Company, or approved equal. Type 1 mechanical splices shall develop in tension or compression a strength of not less than 125 percent of the ASTM specified minimum yield strength of the reinforcement and shall meet all other ACI 318 requirements. Where splices at the face of wall are shown or approved, form saver-type mechanical couplers may be used. Form-saver couplers shall have integral plates designed to positively connect coupler to formwork. Type 1 mechanical splices are typical except for locations noted below where Type 2 mechanical splices are required.

B. Type 2 mechanical splices shall meet the requirements for a Type 1 mechanical splice, plus develop the ASTM specified tensile strength of the reinforcement. Type 2 mechanical splices shall be provided at locations specifically noted on the design drawings.

2.06 TIE WIRE

A. The wire shall be minimum 16 gage annealed steel conforming to FEDSPEC QQ-W-461H.

2.07 BAR SUPPORTS

A. Bar supports coming into contact with forms shall be CRSI Class 1 plastic protected or Class 2 stainless steel protected and shall be located in accordance with CRSI-MSP and placed in accordance with CRSI-PRB. Plastic coating on legs shall extend at least 0.5-inch upward from form surface.

B. Provide precast concrete blocks, four inches square in plan, with embedded tie wires (wire dobies) as specified by CRSI 1 MSP for footing and slabs on grade. Do not use brick, broken concrete masonry units, spalls, rocks, construction debris, or similar material for supporting reinforcing steel. Precast concrete blocks shall have same or higher compressive strength as specified for concrete in which they are located.

C. Provide stainless steel or plastic protected plain steel supports for other work.

2.08 FABRICATION:

A. Fabricate reinforcing steel bars in accordance with ACI 315 and the following tolerances:
   1. Sheared lengths: +/-1 inch.
   2. Overall dimensions of stirrups, ties, and spirals: +/-1/2 inch.
   3. All other bends: +0 inch, -1/2 inch

4. Minimum diameter of bends of reinforcing steel bars: Per ACI 318.

PART 3 EXECUTION

3.01 PLACEMENT TOLERANCE

A. Reinforcing steel placement tolerance shall conform to the requirements of ACI 117, ACI 318, and the following:
   1. Reinforcing steel bar clear distance to formed surfaces shall be within +/-1/4 inch of specified clearance and minimum spacing between bars shall be a maximum of 1/4 inch less than specified.
   2. Reinforcing steel top bars in slabs and beams shall be placed +/-1/4 inch of specified depth in members 8 inches deep or less and -1/4", +1/2 inch of specified depth in members greater than 8 inches deep.
   3. Reinforcing steel spacing shall be placed within +/- one bar diameter or +/- 1 inch, whichever is greater.
   4. The minimum clear distance between reinforcing steel bars shall be equal to the greater of 1 inch, the reinforcing steel bar diameter or 4/3 the maximum aggregate diameter.
   5. Beam and slab reinforcing steel bars shall be threaded through column vertical reinforcing steel bars without displacing the column reinforcing steel bars and still maintain clear distances for beam and slab reinforcing steel bars.

3.02 CONCRETE COVER

A. Unless specified otherwise on the Drawings, reinforcing steel bar cover shall conform to the following:
   1. Reinforcing steel bar cover shall be 3 inches for concrete cast against earth.
   2. Reinforcing steel bar cover shall be 2 inches for reinforcing steel bars for formed concrete surfaces exposed to earth and weather.
   3. Reinforcing steel bar cover shall be 2 inches for any formed surfaces exposed to or above any liquid.
   4. Reinforcing steel bar cover shall be 1 ½ inches for reinforcing not in the above categories unless noted otherwise on the Drawings.

3.03 SPLICING

A. Reinforcing steel splicing shall conform to the following:
   1. Use Class B splice lengths in accordance with ACI 318 for all reinforcing steel bars unless shown otherwise on the drawings.
   2. Splicing of reinforcing elements noted as "tension tie" members on the Drawings shall be avoided whenever possible. If splices cannot be avoided, the splices shall be made with full mechanical or full welded splice capable of developing at least 125 percent of the specified yield strength of the bar. Splices in adjacent bars shall be staggered at least 30 inches.
   3. For welded wire fabric the splice lap length measured between the outermost cross wires of each fabric sheet shall not be less than one spacing of cross wires

plus 2 inches, nor less than 1.5 times the development length nor less than 6 inches.

4. Splices of reinforcement steel bars not specifically indicated or specified shall be subject to the approval of the Engineer. Mechanical proprietary splice connections may be used when approved by the Engineer or as indicated on the Drawings.
5. Welding of reinforcing steel bars is not allowed unless approved by the Engineer.

3.04 CLEANING

A. Reinforcing steel bars at time of concrete placement shall be free of mud, oil, loose rust, or other materials that may affect or reduce bond. Reinforcing steel bars with rust, mill scale or a combination of both may be accepted without cleaning or brushing provided dimensions and weights including heights of deformation on a cleaned sample are not less than required by applicable ASTM standards.

3.05 PLACEMENT

A. Reinforcing steel bar placement shall conform to the following:
   1. Uncoated reinforcing steel bars shall be supported and fastened together to prevent displacement by construction loads or concrete placement. For concrete placed on ground, furnish concrete block supports or metal bar supports with non-metallic bottom plates. For concrete placed against forms furnish plastic or plastic-coated metal chairs, runners, bolsters, spacers and hangers for the reinforcing steel bar support. Only tips in contact with the forms require a plastic coating.
   2. Where parallel horizontal reinforcement in beams is indicated to be placed in two or more layers, reinforcing steel bars in the upper layers shall be placed directly over the reinforcing steel bars in the bottom layer with the clear distance between each layer to be 2 inches unless otherwise noted on the Drawings. Place spacer reinforcing steel bars at a maximum of 3’-0” on center to maintain the minimum clear spacing between layers.
   3. Extend reinforcement to within 2 inches of formed edges and 3 inches of the concrete perimeter when concrete is placed against earth.
   4. Reinforcing steel bars shall not be bent after embedding in hardened concrete unless approved by the Engineer.
   5. Tack welding or bending reinforcing steel bars by means of heat is prohibited.
   6. Where required by the contract documents, reinforcing steel bars shall be embedded into the hardened concrete utilizing an adhesive anchoring system specifically manufactured for that application. Installation shall be per the manufacturer’s written instructions.
   7. Bars with kinks or with bends not shown shall not be used.
   8. Heating or welding bars shall be performed in accordance with AWS D1.4 and shall only be permitted where specified or approved by the Engineer. Bars shall not be welded at the bend.

3.06 FIELD QUALITY CONTROL

A. Field quality control shall include the following:

1. Notify the City's Representative whenever the specified clearances between the reinforcing steel bars cannot be met. The concrete shall not be placed until the Contractor submits a solution to the congestion problem and it has been approved by the City.
2. The reinforcing steel bars may be moved as necessary to avoid other reinforcing steel bars, conduits or other embedded items provided the tolerance does not exceed that specified in this section. The Engineer's approval of the modified reinforcing steel arrangement is required where the specified tolerance is exceeded. No cutting of the reinforcing steel bars shall be done without written approval of the City.
3. An independent laboratory shall be employed to review and approve Contractor Procedure Qualification Records and Weld Procedure Specifications as well as review manufacturer data on proposed electrodes. A Special Inspector approved by the City of San Diego shall visually inspect each weld for visible defects and conduct non-destructive field testing (radiographic or magnetic particle) on not less than one sample for each 10 welds. If a defective weld is found, the previous 5 welds by the same welder shall also be tested.

END OF SECTION

SECTION 03 30 00
CAST-IN-PLACE CONCRETE

PART 1 GENERAL

1.01 SUMMARY

A. Section includes: Cast-in-place concrete, which consists of providing material, mixing, transporting equipment, and labor for the proportioning, mixing, transporting, placing, consolidating, finishing, curing, and protection of concrete in the structure.

1.02 RELATED SECTIONS

A. This section contains specific references to the following related specification sections. Additional related sections may apply that are not specifically listed below.
   1. Section 03 60 00 Grouting
   2. Section 09 90 00 Protective Coating

1.03 REFERENCES:

A. The references listed below are a part of this section. Where a referenced document contains references to other standards, those documents are included as references under this section as if referenced directly. In the event of conflict between the requirements of this section and those of the listed documents, the requirements of this section shall prevail.

Reference	Title
ACI 117	Tolerances for Concrete Construction and Materials
ACI 211.1	Selecting Proportions for Normal, Heavy Weight and Mass Concrete
ACI 301	Specifications for Structural Concrete
ACI 305.1	Specification for Hot Weather Concreting
ACI 306.1	Standard Specification for Cold Weather Concreting
ACI 214R	Guide to Evaluation of Strength Test Results in Concrete
ACI 318	Building Code Requirements for Structural Concrete
ACI 350	Code Requirements for Environmental Engineering Concrete Structures
ACI 350.1	Tightness Testing of Environmental Engineering Concrete Containment Structures
ACI 503.7	Crack Repair by Epoxy Injection
ASTM C31	Making and Curing Concrete Test Specimens in the Field
ASTM C33	Concrete Aggregates
ASTM C39	Compressive Strength of Cylindrical Concrete Specimens
ASTM C42	Obtaining and Testing Drilled Cores and Sawed Beams of Concrete
ASTM C94	Ready-Mixed Concrete
ASTM C117	Materials Finer Than 75-μm (No. 200) Sieve in Mineral Aggregates by Washing

Reference	Title
ASTM C131	Resistance to Degradation of Small-Size Coarse Aggregate by Abrasion and Impact in the Los Angeles Machine
ASTM C136	Sieve Analysis of Fine and Coarse Aggregates
ASTM C143	Slump of Hydraulic Cement Concrete
ASTM C150	Portland Cement
ASTM C157	Length Change of Hardened Cement Mortar and Concrete
ASTM C172	Sampling Freshly Mixed Concrete
ASTM C192	Making and Curing Concrete Test Specimens in the Laboratory
ASTM C231	Air Content of Freshly Mixed Concrete by the Pressure Method
ASTM C260	Air-Entraining Admixtures for Concrete
ASTM C309	Liquid Membrane-Forming Compounds for Curing Concrete
ASTM C494	Chemical Admixtures for Concrete
ASTM C595	Blended Hydraulic Cements
ASTM C618	Coal Fly Ash and Raw or Calcined Natural Pozzolan for Use in Concrete
ASTM C881	Epoxy-Resin-Base Bonding Systems for Concrete
ASTM C989	Slag Cement for use in Concrete and Mortars
ASTM C1059	Latex Agents for Bonding Fresh to Hardened Concrete
ASTM C1260	Potential Alkali Reactivity of Aggregates (Mortar-Bar Method)
ASTM C1315	Liquid Membrane-Forming Compounds for Curing and Sealing Concrete
ASTM C1567	Potential Alkali-Silica Reactivity of Combinations of Cementitious Materials and Aggregate
ASTM C1602	Mixing Water Used in the Production of Hydraulic Cement Concrete
ASTM D75	Sampling Aggregates
ASTM D2419	Standard Test Method for Sand Equivalent Value of Soils and Fine Aggregate
ASTM E329	Agencies Engaged in Construction Inspection and/or Testing
CRD-C572	U.S. Corps of Engineer's Specifications for Polyvinylchloride Waterstop
CBC	California Building Code

1.04 SUBMITTALS

A. Action Submittals:

1. Procedures: Section 01 33 00.
2. A copy of this specification section with each paragraph check-marked to indicate specification compliance or marked to indicate requested deviations from specification requirements.
3. Check-marks (✓) denote full compliance with a paragraph as a whole. Deviations shall be underlined and denoted by a number in the margin to the right of the identified paragraph. The remaining portions of the paragraph not underlined signify compliance with the specification. Include a detailed, written justification for each deviation.
4. Each proposed mix design showing:
   a. Expected strength at 7 and 28-days

b. Slump, before and after introduction of high-range water-reducing admixture
c. Water/cement ratio
d. Weights and test results of the ingredients
e. Aggregate gradation
f. Test results of mix design prepared by an independent testing laboratory
g. Shrinkage test results for liquid containing structures
h. Other physical properties necessary to review each mix design for conformance with these specifications

5. Mix designs proposed shall be sealed by a Professional Civil Engineer or Structural Engineer registered in the State of California.
6. Product literature and technical data for aggregates, cement, and pozzolan.
7. Product literature, technical data, and dosage of proposed admixtures including, but not limited to, air entraining, water reducing, retarding, shrinkage reducing, crystalline waterproofing, etc.
8. Anticipated average delivery time from batch plant to site. If this time exceeds the limit specified in Part 3, include proposed method to extend set time without deleterious effects on final product. City Representative reserves the right to accept or reject such proposed methods.
9. Lift Drawings: Submit shop drawings for concrete placements on the project before on-site construction begins. The drawings shall be organized by structure and submitted set for the ENGINEER ON RECORD's review. The drawings shall be drawn to scale and show dimensions and placement volumes. Show location of construction joints, scheduled finish, embedments, penetrations, openings, keyways, blockouts, bulkheads, etc. The drawings shall clearly show the placement sequence.
10. Curing program description in sufficient detail to demonstrate that the Subcontractor will provide acceptable strength, finish, and crack control within the completed structure.
11. Product literature and technical data for waterstops, curing and sealing compounds, bonding compounds, surface hardeners, epoxy and chemical grout for crack injection, and retardant.
12. Concrete delivery truck tickets showing the information listed in ASTM C94, section 14.

1.05 QUALITY ASSURANCE

A. Quality Control By the CITY:

1. Special Inspection of concrete work shall be performed by the Special Inspector under contract with the CITY and in conformance with the CBC Chapter 17. Special Inspection of concrete is in addition to, not replacing, other inspections and quality control requirements specified herein. Where sampling and testing specified herein conforms to Special Inspection standards, such sampling and testing need not be duplicated. Note that Special Inspection Standards require testing and sampling to be by a testing agency approved by the City and independent of (not hired by) the Contractor.

2. All structural concrete work shall receive Special Inspection in accordance with CBC Chapter 17. Structural concrete includes elements which resist code-defined loads and whose failure would impact life safety. Non-structural site work concrete does not require Special Inspection. Anchor bolts and anchors installed in hardened concrete require Special Inspection.

B. Quality Control By Contractor:
1. Where required to demonstrate conformance with the specified requirements for cast-in-place concrete, the Contractor shall provide the services of an independent testing laboratory which complies with the requirements of ASTM E329 and C1077. The testing laboratory shall sample and test concrete materials as specified in this section. Costs of testing laboratory services shall be borne by the Contractor.
2. Refer to Section 01453 Sampling, Testing and Fabrication Inspection.

C. Basis For Quality:
1. Cast-in-place concrete shall conform to the requirements of ACI 301, except as modified herein.

PART 2 PRODUCTS

2.01 MATERIALS

A. Cement:
1. Portland cement shall be ASTM C150, Type II or Type V, low alkali, containing less than 0.60 percent alkalis. In addition to standard requirements, cement shall satisfy optional chemical and physical requirements of ASTM C150, Tables 2 and 4, respectively.
2. If low alkali cement is not available, aggregates shall show an expansion of less than 0.1% when tested in accordance with ASTM C1260 or ASTM C1567 concrete mix test results shall be submitted verifying that the aggregates are not reactive per the criteria in this standard. ASTM C1260 and ASTM C1567 results shall be no older than 1 year.
3. Portland-pozzolan cement shall be ASTM C595, Type IP (MS), interground, low alkali.
4. Use cementitious materials that are of the same brand and type and from the same plant of manufacture as the cementitious materials used in the concrete represented by the submitted field test records or used in the trial mixtures. See Change of Materials paragraph below.

B. Ground granulated blast-furnace slag (GGBFS), if used in conjunction with portland cement, shall be per ASTM C989, Grade 100 or Grade 120, limited to 50 percent of the weight of cementitious materials. If GGBFS is combined with pozzolans and/or silica fume, the total weight of GGBFS, pozzolans, and silica fume shall not exceed 50 percent of the weight of cementitious materials.

C. Aggregates:
1. General:

a. Except as modified herein, fine and coarse aggregates shall conform to ASTM C33. Fine and coarse aggregates are regarded as separate ingredients. Aggregates shall be non-reactive and washed before use.
b. Check aggregates for alkali-silica reactive constituents per ASTM C1260. Aggregate shall have less than 0.1% expansion when tested in accordance with ASTM C1260. Aggregates having 0.1% or greater expansion may still be satisfactory provided ASTM C1567 concrete mix test results are submitted and show an expansion of less than 0.1% at 16 days. Test results shall be no older than 1 year.
c. Tests for size and grading of fine and coarse aggregates shall be in accordance with ASTM C136. Combined aggregates shall be well and uniformly graded from coarse to fine sizes to produce a concrete that has optimum workability and consolidation characteristics. Establish the final combined aggregate gradation during mix design.
d. Aggregates used in the project production concrete shall be obtained from the same sources and have the same size ranges as the aggregates used in the concrete represented by the submitted historical data or trial mixtures. See Change of Materials paragraph below.

2. Fine Aggregate:
   a. Fine aggregate shall be hard, dense, durable particles of either sand or crushed stone regularly graded from coarse to fine. Gradation shall conform to ASTM C33. For classes of concrete which will be used in liquid retaining structures, fine aggregate shall not exceed 40 percent by weight of combined aggregate total, except for concrete with coarse aggregate of less than maximum size 1/2 inch.
   b. Variations from the specified gradations in individual tests will be acceptable if the average of three consecutive tests is within the specified limits and the variation is within the permissible variation listed below:

U.S. standard sieve size	Permissible variation in individual tests, percent
30 and coarser	2
50 and finer	0.5

   c. Other tests shall be in accordance with the following specifications:

Test	Test method	Requirements
Amount of material	ASTM C117	3 percent passing No. 200 sieve maximum by weight
Sand equivalent	ASTM D2419	Minimum 70 percent

3. Coarse Aggregate:
   a. Coarse aggregate shall be hard, dense and durable gravel or crushed rock free from injurious amounts of soft and friable particles, alkali, and organic matter. Other deleterious substances shall not exceed the limits listed in ASTM C33, Table 3 for Class Designation 5S. Gradation of each coarse aggregate size specified shall conform to ASTM C33, Table 2.

b. Variations from the specified gradations will be acceptable in individual tests if the average of three consecutive tests is within the specified limits.

D. Pozzolan:
1. Pozzolan shall be Class F fly ash conforming to ASTM C618. Class C fly ash is not allowed. Pozzolan supplied during the life of the project shall have been formed at the same single source. See Change of Materials paragraph below.
2. The pozzolan color shall not substantially alter the resulting concrete from the normal gray color and appearance.
3. Use pozzolan materials that are of the same brand and type and from the same plant of manufacture as the materials used in the concrete represented by the submitted field test records or used in the trial mixtures.

E. Admixtures:
1. General:
   a. Admixtures shall be compatible with the concrete and with each other. Calcium chloride or admixtures containing calcium chloride are not acceptable. Use admixtures in accordance with the manufacturer's recommendations and add separately to the concrete mix. Water reducing retarders and admixtures shall reduce the water required by at least 11 percent for a given concrete consistency and shall comply with the water/cement ratio standards of ACI 211.1. Retarder dosage shall result in set time consistent with requirements specified in Part 3.
2. Water Reducing Admixtures:
   a. Conform to ASTM C494, Type A. Acceptable products include: BASF Corporation “MasterPozzolith Series”; SIKA Chemical Corp. “Plastocrete 161”; Euclid Chemical Co. “Eucon WR 91”; or approved equal.
3. Water Reducing and Retarding Admixtures:
   a. Conform to ASTM C494, Type D. Acceptable products include: BASF “MasterPozzolith 80”; Sika Chemical Corp. “Plastiment”; Euclid Chemical Co. “Eucon Retarder 75”; or approved equal.
4. High Range Water Reducing (Superplasticizing) Admixtures:
   a. Conform to ASTM C494, Type F. Acceptable products include: BASF “MasterGlenium” Series; Sika Chemical Corp. “Viscocrete 2100” or “Viscocrete 2110” (Hot Weather) or “Viscocrete 6100” (Cold Weather); Euclid Chemical Co. “Eucon 37”; W.R. Grace “ADVA 195”; or approved equal.
5. High Range Water Reducing And Retarding Admixtures:
   a. Conform to ASTM C494, Type G. Acceptable products include: W.R. Grace “Daracem 100”; Sika Chemical Corp. “Sikaplast 200”; Euclid Chemical Co. “Eucon 537”; or approved equal.
6. Air Entraining Agent:
   a. Conform to ASTM C260 and produce air entrained concrete as specified in the Mix Proportioning table below. Acceptable products include: Sika Chemical Corp. “AEA-14” or “Sika AIR”; Euclid Chemical Co. “AEA-92”; or approved equal.
7. Shrinkage Reducing Admixture:

a. Select admixture for compatibility with air entrainment admixture and other ingredients in the concrete mix. Acceptable products include: BASF “Tetraguard AS20”; Grace “Eclipse 4500”; or approved equal.

F. Water:

1. For washing aggregate, mixing, and for curing shall be free from oil and deleterious amounts of acids, alkalis, and organic materials; comply with the requirements of ASTM C1602. Additionally, water used for curing shall not contain an amount of impurities sufficient to discolor the concrete.

G. Change of Materials:

1. After each concrete mix design is approved, no changes of any sort or source will be allowed without prior written approval from the Engineer. When brand, type, size, or source of cementitious materials, aggregates, water, ice, or admixtures are proposed to be changed, new field data, data from new trial mixtures, or evidence that indicates that the change will not affect adversely the relevant properties of the concrete shall be submitted for approval by the Engineer before use in concrete.

2.02 CONCRETE CHARACTERISTICS

A. Mix Proportioning:

1. Concrete shall be normal weight concrete composed of cement, pozzolan, admixtures, aggregates, and water; proportioned and mixed to produce a workable, strong, dense, and impermeable concrete. It is acceptable to substitute interground Portland-pozzolan cement conforming to ASTM C595, containing the specified amount of pozzolan in lieu of Portland cement and pozzolan. Water-cementitious material (w/cm) ratio is based on the combined contents of cement and pozzolan.
2. Provide concrete mix designs in accordance with the following guidelines:

Concrete class	Minimum[a] 28-day compressive strength, psi	ASTM coarse aggregate size	Maximum water-cementitious materials (w/cm) ratio	Minimum cementitious materials content (pounds/CY)	Pozzolan, percent by weight of cementitious materials[d]	Slump range[f] (inches)
A	4000[b]	467	0.42	515	20-35	3-5
B	3000	57 or 67	0.45	560	15-20	3-5
C-1	4500	57 or 67	0.40	560	15-20	3-5
C-2	5000	57 or 67	0.42	560	15-20	3-5
D-2	4500	8	0.40	600	15-20	3-5
E[c]	2000	57	--	-	15-20	4-8
F	500[e]	-	--		15-20	4-8
G	5,000	57 or 67	0.40	560	15-20	3-5

[a] *Determine compressive strength at the end of 28 days based on test cylinders made and tested in accordance with ASTM C39.*

[b] *Compressive strength of Class A concrete may be determined at 56 days.*

[c] *Concrete encasement for electrical conduit shall contain 3 pounds of red oxide per sack of cement.*

[d] *Pozzolan use is optional for all concrete class.*

[e] *Minimum 28-day compressive strength shall be 500 psi and maximum 28-day compressive strength shall be 1,000 psi.*

[f] *Slump before addition of high range water reducing admixture (superplasticizer). Maximum slump after addition of high range water reducing admixture shall be 8".*

B. Use:

1. Provide concrete by class for the uses listed below.

Concrete class	Type of use
A	Concrete greater than 36 inches thick
B	Non-structural concrete (sidewalks, curbs, pavers, etc.)
C-1	Typical cast-in-place structural concrete
C-2	Precast concrete
E[a]	Pipe bedding and encasement, electrical conduit encasement (duct banks) and concrete fill
F	Encasement of reinforcement extension for future construction
G	Piles

[a] *Contractor's option to use the same concrete mix for pipe encasement as the concrete slab above.*

C. Control Tests:

1. General:
   a. Select and adjust proportions of ingredients in accordance with ACI 211.1. Verification of mix characteristics for submittal may be achieved using either the Trial Mix Design method or Field Experience Data method. Do not place concrete prior to submittal and acceptance of proposed mix.
2. Trial Mix Design:
   a. Mixes verified by this method shall have the samples produced for testing, manufactured at the batch plant which will supply concrete to the project, using materials proposed for the Work and material combinations listed above. Testing, data, and reporting shall conform to ACI 318 and the following:
      1) Required compressive strength used as the basis for selecting concrete proportions (f'cr) shall be the specified concrete strength (f'c) + 1000 psi for specified concrete strengths less than 3,000 psi and f'c + 1200 psi for specified concrete strengths between 3000 psi and 5000 psi.
      2) Make at least three different trial mixtures for each class of concrete qualified by the Trial Mix Design. Each trial mixture shall have a different w/cm ratio or different cementitious materials content that will produce a range of compressive strengths encompassing f'cr.
      3) Design trial mixtures to produce a slump within ¾ inch of the maximum specified and an air content within 0.5 percent of the maximum specified.

4) For each w/cm ratio or cementitious materials content, cast and cure at least twelve standard test cylinders in accordance with ASTM C192. Four cylinders from each batch tested at age 7-days, 14-days, and 28-days or as required to comply with ACI 318.
5) From results of the cylinder tests, plot a curve showing the relationship between w/cm ratio and compressive strength.
6) From the curve of w/cm ratio versus compressive strength, select the w/cm ratio that will produce f'cr. This is the maximum w/cm ratio to be used unless a lower w/cm ratio is specified above.

3. Field Experience Data:
   a. When sufficient test data for a particular mix design is available which is identical or substantially similar to that proposed for use, Contractor may substitute use of this data in lieu of a trial mix design. Field data, reports, and analysis shall conform to ACI 318, except as modified herein.
      1) Historical mix design proportions for which data are submitted may vary from the specified mix within the following limits:
         a) f'c as specified or up to 500 psi above
         b) w/cm ratio as specified or lower
         c) pozzolan content within 5 percent of that specified
         d) maximum coarse aggregate size may not vary smaller, but gradation of coarse aggregate may vary
         e) slump after introduction of admixtures +0/-1 inch.
   b. Use of historical Field Experience Data does not allow modification of the project mix specifications herein without review and acceptance by the Engineer.
4. Shrinkage:
   a. Liquid containing structures using Class C-1 concrete mix are intended to be watertight. Provide test results for Class C-1 concrete mix meeting the following requirement: drying shrinkage limit of 0.038 percent in the laboratory at 35-days (7-days moist cure and 28-days drying) as tested in accordance with ASTM C157 and the following modifications:
      1) Wet cure specimens for a period of 7-days (including the period of time the specimens are in the mold). Wet cure may be achieved either through storage in a moist cabinet or room in accordance with ASTM C 511, or through storage in lime saturated water.
      2) Slump of concrete for testing shall match job requirements and need not be limited to restrictions as stated in ASTM C 157 section 8.4.
      3) Report results in accordance with ASTM C 157 at 0, 7, 14 & 28-days of drying.
   b. Concrete shall not be placed in the field prior to acceptance of the concrete mix. To meet the drying shrinkage limit, it is recommended that a shrinkage reducing admixture be considered for use in concrete for liquid containing structures.

2.03 WATERSTOPS

A. Polyvinyl Chloride (PVC):
   1. Manufacture PVC waterstops from virgin polyvinyl chloride conforming to the Corps of Engineers Specification No. CRD-C572. Use 6-inch flat center/ribbed sides/0.375-inch-thick less waterstops in construction joints. Acceptable products include: Greenstreak Group, Inc. “Model 679”; Vinylex Waterstops and Accessories “Model R638”; or approved equal. Use 9-inch center-bulb/ribbed sides/0.375-inch-thick waterstops in expansion joints. Acceptable products include: Greenstreak Group, Inc. “Model 696”; Vinylex Waterstops and Accessories Model “RLB938”; or approved equal.
   2. Use molded crosses, tees, and other shapes for changes of direction, intersections, and transitions as recommended by the manufacturer.

B. Expanding (Hydrophilic) Waterstops:
   1. Expanding waterstops shall be bentonite-free and made from unvulcanized rubber. Acceptable products include: Adeka Corporation “Ultra Seal MC-2010MN”; Greenstreak Group, Inc. “Hydrotite CJ-1020-2K”; or approved equal. These are allowable for use only where indicated on the drawings or accepted in writing by the Engineer. Provide adhesive approved by the waterstop manufacturer plus concrete nails and fender washers to secure waterstop material in-place during concrete placement. The waterstop MUST be placed between two mats or curtains of steel reinforcement.
   2. For limited cover applications or where only one mat or curtain of reinforcement is present, use Adeka Corporation “Ultra Seal KBA-1510FP” or approved equal.

2.04 SEALANTS AND JOINT FILLERS (NOT USED)

2.05 BONDING COMPOUNDS

A. Epoxy resin bonding compounds for use in wet areas shall conform to ASTM C881 Types IV or V, Class A, B, or C depending on temperature at use. Acceptable products include: BASF “MasterEmaco ADH 327RS” or “MasterEmaco ADH 1490”; Sika Chemical Corporation “Sikadur 32”; or approved equal.

B. Non-epoxy bonding compounds for use in dry areas for non-structural bonding or as noted on the drawings shall conform to ASTM C1059 Type II. Acceptable products include: Edoco “Burke Acrylic Bondcrete”; ChemMasters “Cretelox”; or approved equal.

C. Apply bonding compounds in accordance with the manufacturer’s instructions.

2.06 EPOXY FOR STRUCTURAL CRACK INJECTION

A. Use a two-component, moisture insensitive, high modulus, injection grade, 100 percent solids, epoxy-resin blend. Consistency as required to achieve complete penetration into cracks. Material shall conform to ASTM C881 Type 1 Grade 1. Acceptable products include: Sika Corporation “Sikadur 52”; Adhesives Technology Corporation “Crackbond SLV302”; or approved equal.

B. Use epoxy injection for structural crack repairs except as noted below for non-structural cracks in liquid-containing concrete structures. The Engineer shall determine whether a crack is classified as structural or non-structural.

2.07 CHEMICAL GROUT FOR CRACK INJECTION

A. Use hydrophobic polyurethane grout at the Engineer's discretion as an alternative for sealing non-structural cracks in concrete structures intended to be watertight. Acceptable products include: DeNeef Construction Chemicals "Hydro Active Cut" and “Flex SLV PURe” or Sika Corporation “SikaFix HH Plus” and “SikaFix HH LV”; or approved equal.

2.08 RETARDANT

A. Retardant for exposing aggregate for unformed surfaces in construction joints shall be Sika Corporation “Rugasol-S”; W.R. Grace “Top-Cast”; or approved equal.

B. Apply retardant in accordance with manufacturer’s instructions sufficient to assure a minimum penetration of 1/4 inch.

2.09 SURFACE HARDENER

A. Moderate Duty Hardener:
   1. Use a premixed, non-colored, and non-metallic hardener. Acceptable products include: BASF “MasterTop 100”; or approved equal.
   2. Apply hardener in accordance with manufacturer’s instructions, in an amount of at least 0.75 pounds per square foot for commercial, light duty traffic and 1.25 pounds per square foot for heavy duty traffic and process spaces. Product and/or application procedure shall be coordinated with air content of concrete being placed.

B. Heavy Duty Hardener:
   1. Use an emery aggregate dry shake applied during slab finishing. Acceptable products include: L&M Construction Chemicals “Emeryplate FF”; or approved equal.
   2. Apply in accordance with manufacturer’s recommendations at a minimum rate of 1.5 pounds per square foot; adjust for the specific floor traffic and use anticipated. Product and/or application procedure shall be coordinated with air content of concrete being placed.

2.10 CURING AND SEALING COMPOUNDS

A. Acceptable products include: BASF “MasterKure CC 250SB”; Dayton Superior “Cure & Seal 25% J22UV”; or approved equal, conforming to ASTM C309 and ASTM C1315. Acceptable products for the Product Water Storage Tank include: Atlas Tech Products “Atlas Quantum-Cure 61”; or approved equal certified to conform to NSF/ANSI Standard 61.

B. Compound shall contain fugitive dye and be applied in at least two coats at right angles to one another in accordance with the manufacturer's instructions.

C. Curing and sealing compound shall be certified compliant with final finish system if applicable.

PART 3 EXECUTION

3.01 GENERAL

A. Use only truck-mixed, ready-mixed concrete conforming to ASTM C94. Proportion materials by weighing.

B. Introduce pozzolan into the mixer with cement and other components of the concrete mix; do not introduce pozzolan into a wet mixer ahead of other materials or with mixing water.

C. Introduce water at the time of charging the mixer; additional water may be introduced within 45 minutes from charging the mixer, provided the specified w/c ratio and slump is not exceeded and the maximum total water per the approved mix design is not exceeded.

D. Arrange with the testing laboratory for inspection as required to comply with these specifications.

E. Deliver concrete to the site and complete discharge within 90 minutes after introduction of water to the mixture. Extension of allowable time beyond this limit requires a Contractor proposed remedial action plan to be reviewed and accepted by the CITY REPRESENTATIVE.

3.02 BATCHING:

A. Concrete produced on site is not allowed.

3.03 CONVEYING AND PLACING CONCRETE

A. Convey concrete from the mixer to the forms in accordance with ACI 301. Remove concrete that has segregated in conveying from the site of the work.

B. Placing Concrete:
   1. General:
      a. Place concrete in accordance with ACI 301. Do not permit concrete to drop freely more than 4-ft.
   2. Placing Concrete By Pumping:
      a. Concrete placed by pumping is at Contractor's discretion and shall not be the cause to change or relax specified mix design characteristics. Concrete shall possess the specified characteristics at the point of placement.
      b. Measure slump at the hose discharge, except as follows: Initial slump testing in each placement shall occur at both the pumping unit inlet hopper and hose

discharge. Slump loss in pumping, measured between the inlet hopper and the hose discharge, shall not exceed 1 inch. After these criteria have been satisfied, slump may be measured at the inlet hopper with allowable slump increased by the earlier measured difference, not to exceed 1 inch.

c. Before starting each pumping operation, prime the pump and line with a cement slurry to lubricate the system. Waste cement slurry outside the forms. Equip hose tip with a safety chain for recovery in case of hose blowout during pumping. Hose or accessories shall not remain in the freshly placed concrete.

3. Placing Concrete In Hot Weather:
   a. In temperatures above 80 degrees F, place concrete in accordance with ACI 305.1.
4. Placing Concrete In Cold Weather:
   a. In temperatures below 45 degrees F, place concrete in accordance with ACI 306.1.

3.04 CONSOLIDATING CONCRETE:

A. Consolidate concrete in accordance with ACI 301. If evidence of inadequate consolidation is observed, concrete placement will be suspended until Contractor provides a revised plan to achieve proper consolidation.

3.05 CURING AND SEALING

A. General:
   1. Cure concrete using water, a clear membrane curing compound containing fugitive dye, or by a combination of both methods. Coordinate repairs or treatment of concrete surfaces so that interruption of curing will not be necessary.
   2. Maintain concrete surface temperature between 50 degrees F and 80 degrees F for at least 5 days. Cure concrete in hot weather (above 80 degrees F) in accordance with ACI 305.1. Cure concrete in cold weather (below 45 degrees F) in accordance with ACI 306.1.

B. Water Curing:
   1. Keep concrete continuously wet for a minimum of 10-days after placement. Absorptive mats or fabric may be used to retain moisture during the curing period.
   2. Use water curing in hot weather for liquid containment structures. Cover forms and keep moist. Loosen forms as soon as possible without damage to the concrete, and make provisions for curing water to run down inside them. During form removal, take care to provide continuously wet cover to newly exposed surfaces.

C. Curing Compound:
   1. When curing compound is allowed, apply it as soon as the concrete has set sufficiently so as not to be marred by the application or apply it immediately following form removal for vertical and other formed surfaces. Preparation of surfaces, application procedures, and installation precautions shall follow

manufacturer's instructions. For liquid containing structures, apply curing compound at twice the manufacturer's recommended dosage rate, applied in two coats perpendicular to each other.

2. Do not use curing compound on concrete surfaces to be coated, waterproofed, moisture-proofed, tiled, roofed, or where other coverings are to be bonded. In these cases, use water curing unless the curing compound is first removed or is compatible with the final finish covering.

3.06 PROTECTION

A. Protect concrete from injurious action by sun, rain, flowing water, frost, and mechanical means.

B. Loading green concrete is not permitted. Green concrete is defined as concrete with less than 100 percent of the specified strength.

C. Backfill shall not be placed against concrete walls until the concrete has reached the specified strength, connecting slabs and beams have been cast and have also reached the specified strength.

3.07 CONSTRUCTION JOINTS

A. General:

1. Place concrete in each unit of construction continuously. Before new concrete is placed on or against concrete which has set, retighten forms and clean foreign matter from the surface of the set concrete. Provide waterstops as specified.

B. Construction:

1. Form construction joints by producing a rough surface of exposed aggregates using a surface retardant; include joints between the slab and topping concrete. The limit of the treated surfaces shall be 1 inch away from the joint edges. Within 24 hours after placing, remove retarded surface mortar either by high pressure water jetting or stiff brushing or combination of both so as to expose coarse aggregate. A rough surface of exposed aggregate may also be produced by sandblasting followed by high pressure water jetting. Sandblasting, if used, shall remove ¼ inch of laitance film and expose coarse aggregate to ensure adequate bond and watertightness at the construction joints.

C. Locations:

1. Provide construction joint locations as follows:
   a. Where shown on Drawings. If no construction joints specifically shown, they shall be provided based on the limitations included in this section.
   b. Cast walls exceeding 50 feet in length in panels not to exceed 30 feet in length. Cast adjoining panels only after 5-days have elapsed. Joints are not allowed within the lesser of 10 feet or 25 percent of the wall length from a corner unless specifically detailed thus on the drawings.
   c. Locate joints in beams or girders at or near the quarter point between supports.

d. Make joints in the members of a floor system at or near the quarter point of the span.

e. Make joints in walls and columns at the underside of floors, slabs, beams or girders and at the tops of footings or floor slabs.

f. Cast slab panels in checkerboard patterns not to exceed 40 feet in length and not to exceed 1600 square feet in area, with maximum 1 ½ to 1 ratio of side lengths. Minimum lapsed time between placing adjacent panels shall be 3-days. The requirements for size of slab panel is waived if joints are located on the Drawings. Mat/elevated foundations are not subject to these requirements.

2. Vertical construction joints shall have edges grooved or beveled at faces exposed to view including interior faces of basins and tanks. Seal grooves subjected to wetting or weather with joint sealant.

3. Continue reinforcing steel and welded wire reinforcement through construction joints. Beams, girders, and floor slabs shall not be constructed over columns or walls until at least one day has elapsed to allow for initial shrinkage in the column or wall. No joint will be allowed between a slab and a beam or girder unless otherwise shown. Joints shall be perpendicular to the main reinforcement. Provide waterstops in construction joints as specified.

3.08 INSERTS AND EMBEDMENTS

A. Inserts:

1. Where pipes, castings, or conduits are to pass through structures, position in forms before placing concrete; or where shown on Drawings or approved by the CITY REPRESENTATIVE, provide openings in the concrete for subsequent insertion of such pipes, castings, or conduits. Provided waterstops and a slight flare in the form to facilitate grouting and permit the escape of entrained air during grouting.

2. Provide additional reinforcement around openings. Use non-shrink grout to infill around inserts.

3. Place horizontal conduits and pipes, in slabs and beams, between the top and bottom layers of reinforcement. Spacing and size limitations shall conform to ACI 318.

4. Conduits and pipes shall not run directly beneath a column or base plate or directly above a pile.

5. Position conduit, pipe, dowels, and other ferrous items such that there will be a minimum of 2-inches clearance between said item and concrete reinforcement. Welding inserts to reinforcement is not permitted.

6. The outside diameter of conduit or pipe shall not exceed one-fourth the slab or beam thickness.

B. Embedments:

1. Gate frames, gate thimbles, special castings, channels, grating frames, or other miscellaneous metal parts to be embedded in concrete shall be secured in the forms prior to concrete placement.

2. Embed anchor bolts and inserts in concrete as shown. Provide inserts, anchors, or other bolts necessary for the attachment of piping, valves, metal parts, and equipment.
3. Provide nailing blocks, plugs, strips, and the like necessary for the attachment of trim, finish, and similar work. Voids in sleeves, inserts, and anchor slots shall be filled temporarily with readily removable material to prevent entry of concrete. Do not use continuous anchor slots or strips in concrete intended to be watertight.
4. Position operators or sleeves for gate or valve stems to clear reinforcing steel, conduit, and other embedments, and to align accurately with equipment.

3.09 EXPANSION JOINTS

A. Expansion joints shall be as shown. Do not extend reinforcement or other embedded metal items through expansion joints. Provide waterstops where indicated.

3.10 WATERSTOPS

A. Waterstops shall conform to ACI 301. Tie waterstops in position prior to placement of concrete to prevent movement and deformation.

B. Provide waterstops in construction and expansion joints as follows:
   1. Joints in parts of structures exposed to ground or water on one side and occupied by non-submerged equipment or by personnel on the other.
   2. Wall and slab joints of tanks and channels subject to water pressure.
   3. Waterstops shall be provided for the full height of the walls.
   4. Provide at other locations shown on the Drawings.

C. Field splices shall be at straight sections using heat fused welded, butt splices only. Lapping of splices or joining by means other than heat fused welding is not allowed.

D. Install hydrophilic waterstops according to manufacturer's recommendations. Surfaces of concrete shall be prepared level/plumb and to the smoothness required by manufacturer. Grind surface as necessary. Provide bonding adhesive and concrete nails with fender washers to hold waterstop in position during concrete placement.

3.11 MODIFICATION OF EXISTING CONCRETE

A. General:
   1. Verify structural dimensions related to or controlled by previously constructed or existing structures prior to concrete work.

B. Cutting or Coring Concrete:
   1. Saw cut concrete to a depth of 1 inch to form straight outlines of concrete areas to be removed. Where reinforcement is exposed due to saw cutting or core drilling and no new material is to be placed on the cut surface, provide a protective epoxy coating to the entire cut surface.

2. Wet surfaces of oversized openings to saturated surface dry condition and brush with a cement paste scrub coat prior to placement of infilled concrete to the required opening size.
3. Grind existing joint edges to create a chamfer matching those used on adjacent construction.
4. Investigate concrete to be drilled, cored, or sawcut to determine location of reinforcing steel. Locate penetrations to clear existing reinforcing steel. Where not possible to avoid reinforcing steel, consult the Engineer as to acceptability of cutting reinforcing steel and provide new reinforcing systems as directed.
5. Locating methods include chipping to expose reinforcing steel, ground penetrating radar, X-ray, or magnetic flux devices. Locating of existing reinforcing shall be by the Contractor.

C. Joining New Concrete To Existing:
1. Existing concrete surfaces to be joined with new concrete shall be cleaned and roughened by abrasive blasting, bush hammering, or other method to achieve ¼-inch amplitude surface. Remove existing metalwork, embeds, or other interfering items. Wet surface to saturated surface dry condition and brush with cement scrub coat prior to placement of new concrete.

D. Post-Installed Anchors and Dowels:
1. Use non-destructive methods for locating reinforcement prior to drilling operations. For anchor and dowel locations that interfere with reinforcement, attempt to relocate to avoid drilling through the reinforcement if possible.
2. For situations that do not allow relocation, cutting of reinforcement for installation is subject to the following:
   a. Prior to drilling through reinforcement, the Contractor shall consult the CityEngineer.
   b. Drill holes with a hammer drill and carbide bit (core drilled holes are not allowed), followed by brushing and air-cleaning with oil-free compressed air.
   c. Holes drilled through reinforcement must be in compliance with adhesive anchor assumptions for roughened hole surface typical of a hammer drill and carbide bit. No smooth hole surfaces are allowed.
   d. Do not cut slab rebar within 24 inches of a supporting wall, column, or an opening in the slab. Do not cut elevated slab rebar in Areas 7 and 8 within 10 feet of a supporting pile.
   e. No cutting of rebar is allowed in the middle third of slab spans for anchors with diameters equal to or greater than 3/4 inch.
   f. Maximum of two rebar may be cut in any 10-foot width of slab where permitted.
   g. Maximum of two rebar may be cut within any 10-foot width of concrete wall.
3. For anchors that cannot be moved and that conflict with the above requirements, consult Engineer for direction. It is not acceptable to cut reinforcement in beams, columns, precast members, or stairs.

4. Use a pre-manufactured, self-mixing, injectable, two-component, epoxy adhesive, as per Section 03 15 10. Follow manufacturer's recommendations and ICC Evaluation Report for installation.

E. Waterstops:
1. Where a waterstop between new and existing concrete is required, install either a hydrophilic waterstop or a retrofit waterstop as indicated.

3.12 FORMED SURFACE FINISHES

A. Repair Of Surface Defects:
1. Repair surface defects, including tie holes, minor honeycombing, or otherwise defective concrete in accordance with ACI 301. Clean areas to be repaired. Cut and chip out honeycombed or otherwise defective areas to solid concrete, to a depth of at least 1-inch. If defective area includes exposed reinforcing steel, correct by removing concrete a minimum of 1-inch beyond the reinforcing. Make edges of the cut perpendicular to the surface of the concrete in a neat rectangular pattern.
2. Joints shall be grooved to a radius or bevel of ¾-inch depth.
3. Finish patches on exposed surfaces to match and blend with adjoining work. Cure patches as specified for the concrete. Protect finished surfaces from stains and abrasions.

B. Formed Surface Finishes:
1. Finish A - Grout Rubbed Finish:
   a. After repair of surface defects, apply a grout rubbed finish in accordance with ACI 301 except that all form fins and other protrusions shall be completely removed. Lightly sandblast surfaces prior to sacking. Sandblasting shall occur after the specified curing period.
   b. Add a PVA bonding compound to the mix water used in sacking mortar; as recommended by the manufacturer.
   c. Provide Finish A at interior surfaces of equipment rooms, galleries, tunnels, operations areas, exposed channels and tanks from 1 foot below minimum water surfaces and up, and at permanently exposed vertical and sloped surfaces such as pipe chases.
   d. Do not provide Finish A at concrete surfaces receiving a coating.
2. Finish B - Smooth Surface Finish:
   a. Initial surface preparation is the same as Finish A; repair surface defects and remove all form fins.
   b. Provide Finish B at surfaces to be coated. See Section 09 90 00 for additional concrete surface preparation, including filling of bug holes, and coating requirements.
3. Finish C - Rough Form Finish:
   a. Repair surface defects and imperfections greater than 3/8 inch in any dimension. Remove form fins and protrusions down to less than 3/8-inch projection.

b. Provide Finish C or smoother, for interior surfaces of wet wells, tanks, and channels; from 1 foot below, minimum water surface and down.
c. Also apply Finish C to unoccupied interior areas not otherwise specified.

4. Finish D – Unfinished Surface:
   a. Repair surface defects and otherwise leave the surfaces as they come from the forms, except plug the holes and repair or remove defects greater than 1/2 inch in any dimension.

3.13 SLAB FINISHES

A. General:
   1. The finishes specified herein include surface finishes, treatments and toppings for floors and slabs. Do not use dry cement on new concrete surfaces to absorb excess moisture. Round edges to a radius of 1/2 inch.
   2. Slope slabs/mat foundations 0.5% minimum to drain.
   3. Slope slabs to drain uniformly within a space. Unless otherwise specified, slope shall be a minimum of 1/8 inch per foot toward nearest drain. Restrict use of floor drains with only locally depressed slabs to locations specifically noted.
   4. Immediately after final finish is applied, the surface shall be cured and protected as specified in Curing, Sealing, and Protection paragraphs above.
   5. Where finish is not specified, floor slabs shall receive a Steel Trowel Finish.

B. Float Finish:
   1. Perform floating with a hand or power-driven float in accordance with ACI 301. Begin floating when the bleed water sheen has disappeared and the surface has stiffened sufficiently. Float as required to meet tolerance requirements of ACI 117 for a conventional surface.
   2. Floating shall close cracks and checks plus compact and smooth the surface. Refloat the slab to a uniform texture.
   3. Apply float finish to surfaces of channels, tank bottom slabs, tops of footings, and surfaces to receive insulation or roofing.

C. Steel Trowel Finish:
   1. Float the concrete surface as indicated above and then trowel in accordance with ACI 301.
   2. Provide Steel Trowel Finish on floors and walking surfaces unless specified otherwise.
   3. Surface Hardener shall be troweled into the finished surface where shown on the Drawings.

D. Broom Finish:
   1. Float the concrete surface as indicated above, then immediately give the concrete a coarse transverse scored texture by drawing a broom or burlap belt across the surface in accordance with ACI 301.
   2. Provide a Broom Finish for walks, top of tank walls, slabs-on-grade exposed to atmosphere, and where otherwise indicated.

3.14 TOPPING CONCRETE

A. Subfloor Finish:
   1. Slabs to receive a topping concrete or topping grout shall be float finished to required elevations. Immediately following the final finishing, either:
      a. treat slab with a retardant and abrasive blast to create expose aggregate with ¼ inch amplitude, or
      b. create the ¼ inch amplitude roughened surface by raking the freshly floated surface using a standard garden rake.
   2. Immediately after finishing, proceed with required curing and protection of the slab as stated above.

B. Topping Concrete or Grout:
   1. Remove dirt, laitance, and loose aggregate. Keep cleaned base slab saturated surface dry for a period of 24 hours prior to the application of topping. Remove excess water.
   2. Apply and scrub a neat cement grout into the surface of the base slab using a stiff broom. The cement grout shall not be allowed to dry and shall be spread within 15 minutes ahead of the topping placement.
   3. The topping shall then be placed, compacted, and floated. Test surface with a straight edge to detect and correct high and low spots to a tolerance of 1/8 inch in 10 feet.
   4. Incorporate float finish, surface hardener, steel trowel finish, etc. as specified.

3.15 RELATED SURFACES

A. Finishing of Unformed Surfaces:
   1. Adjacent Unformed Surfaces:
      a. Tops of walls, buttresses, horizontal offsets, and similar unformed surfaces occurring adjacent to formed surfaces shall be struck smooth after concrete is placed and shall be Float Finished to a texture reasonably consistent with that of the adjacent formed surface.
      b. Continue final treatment of formed surface uniformly across the top of the unformed surface.
   2. Pavements and Sidewalks:
      a. The surface of the concrete shall be screened to grade and sloped to drain. After screening, the surface shall be Float Finished followed by a Broom Finish.
      b. Round edges and expansion joints to a radius of 1/2 inch. Control joints shall be grooved or sawcut to a minimum depth of 1/4 the slab thickness.

3.16 FIELD SAMPLING AND TESTS

A. General:
   1. Field sampling and tests shall be performed by an independent testing laboratory. Samples of aggregates and concrete will be obtained at such times to

represent the quality of the materials and work throughout the project.

2. The laboratory shall provide necessary labor, materials and facilities for sampling aggregate and for casting, handling, and initially storing the concrete samples at the work site.
3. The minimum number of samples and tests are specified in Testing paragraph below.

B. Sampling:
1. Aggregates:
   a. General:
      1) Sample fine and coarse aggregates in accordance with ASTM D75 not less than 30 days prior to the use of such aggregates in the work.
      2) Take samples at the discharge gates of the bins feeding the weigh hopper. Repeat sampling when the source of material is changed or when unacceptable deficiencies or variations from the specified requirements of materials are found.
      3) Aggregate samples shall be tagged and their sources identified.
   b. Coarse Aggregate:
      1) Take a sample weighing between 50 and 60 pounds after the batch plant is brought up to full operation.
      2) Take samples to obtain a uniform cross section, accurately representing the materials on the belt or in the bins for sieve analysis.
   c. Fine Aggregate:
      1) Take samples as specified for coarse aggregate.
      2) Take samples of sand when the sand is moist for sieve analysis and specific gravity tests.
2. Concrete:
   a. Take samples of plastic concrete in accordance with ASTM C172.
   b. Take samples at the hopper of mixing equipment or transit mix truck, except as noted in the Placing Concrete by Pumping subparagraph of the Conveying and Placing article above.

C. Testing:
1. Aggregate:
   a. A minimum of one test of coarse aggregate per 400 cubic yards of concrete used and a minimum of one test of fine aggregate per 200 cubic yards of concrete used shall be made to confirm continuing conformance with specifications for gradation, cleanliness and sand equivalent.
   b. A minimum of one test per day of each aggregate is required.
   c. Repeat of the entire concrete mix design test program is required before source changes will be accepted.
2. Concrete:
   a. Strength Tests:

1) The strengths specified for the design mix shall be verified by the independent testing laboratory during placement of the concrete. Verification shall be accomplished by testing standard cylinders of concrete samples taken at the job site. Cylinders shall be 4 by 8 inch or 6 x 12 inch.
2) Concrete samples shall represent the concrete placed in the forms. One set of six standard 6 x 12-inch (or nine 4 x 8 inch) cylinders shall be cast of each class of concrete for each 100 cubic yards or less, or for each 5,000 square feet of wall surface area placed per day. Provide additional cylinders when an error in batching is suspected. Each set of cylinders are cast from material taken from a single load of concrete.
3) Casting, handling and curing of cylinders shall be in accordance with ASTM C31. For the first 24 hours after casting, keep cylinders moist in a storage box constructed and located so that its interior air temperature will be between 60 and 80 degrees F. At the end of 24 hours, the testing laboratory will transport the cylinders to their laboratory.
4) Testing of specimens for compressive strength shall be in accordance with ASTM C39. Each test shall consist of two 6 x 12-inch (or three 4 x 8 inch) test cylinders from each group of six (or nine) specimens. Test at the end of 7 days and at the end of 28 days. The remaining cylinders shall be tested at the end of 56 days if the 28-day strength reports below specification.
5) A strength test shall consist of the average strength of two 6 x 12 inch (or three 4 x 8). If one cylinder shows evidence of low strength due to improper sampling, casting, handling, or curing, the result of the remaining cylinders may be used if approved by the City Representative.
6) The average of any three consecutive 28-day strength test results of the cylinders representing each class of concrete for each structure shall be equal to or greater than the specified strength. Not more than 10 percent of the individual strength test results shall have values less than the specified 28-day strength for the total job concrete. No individual strength test result shall be less than the specified strength by more than 500 pounds per square inch.
7) Provide certified reports of the test results directly to the City and the Engineer. Test reports shall include sufficient information to identify the mix used, the stationing or location of the concrete placement, and the quantity placed. Slump, water/cement ratio, air content, temperature of concrete, and ambient temperature shall be noted.
8) The 28-day strength test results shall be evaluated in accordance with ACI 214R. Quality control charts showing field test results shall be included with the test results for each class of concrete in each major structure. Charts shall be prepared in accordance with ACI 214R. Quality control charts shall be maintained throughout the entire project and shall be available for the City's inspection at any time.
9) If the 28-day test results fall below the specified compressive strength for the class of concrete required for any portion of the work, adjustment in the proportions, water content, or both, shall be made as necessary at the

Contractor's expense. Report changes and adjustments in writing to the City.

10) If compressive test results indicate concrete in place may not meet structural requirements, tests shall be made to determine if the structure or portion thereof is structurally sound. Tests may include, but not be limited to, cores in accordance with ASTM C42 and any other analyses or load tests acceptable to the Engineer. Costs of such tests and/or analysis shall be borne by the Contractor.

b. Tests for Consistency of Concrete:
   1) Measure slump in accordance with ASTM C143. Take samples for slump determination from concrete during placement. Tests shall be made at the beginning of concrete placement operation, whenever test cylinders are cast, and at subsequent intervals to ensure that the specification requirements are met.
   2) For pumped concrete, measure slump in accordance with the Placing Concrete by Pumping subparagraph of the Conveying and Placing article above.
   3) When high range water reducer is added at the site, slump tests shall be taken before and after addition of the admixture.

c. Tests for Temperature and Air Content:
   1) Temperature tests shall be made at frequent intervals during hot or cold weather conditions until satisfactory temperature control is established. Perform temperature tests whenever test cylinders are cast.
   2) Measure air content in accordance with ASTM C231 whenever test cylinders are cast. For pumped concrete, measure air content in accordance with the Placing Concrete by Pumping subparagraph of the Conveying and Placing article above.

D. Final Laboratory Report:
   1. The testing laboratory shall provide a final report at the completion of all concreting. This report shall summarize the findings concerning concrete used in the project and provide totals of concrete used by class and structure.
   2. Include final quality control charts for compressive strength tests for classes of concrete specified in each major structure. Also include the concrete batch plant's coefficient of variation and standard deviation results for each class of concrete.

3.17 REPAIR OF DAMAGED AND CRACKED CONCRETE:

A. Acceptance Of Concrete:
   1. Completed cast-in-place concrete work shall conform to the applicable requirements of ACI 301 and the Contract Documents. Concrete work that fails to meet these requirements shall be repaired, as approved by the Engineer, to bring the concrete into compliance. Repair methods shall be in accordance with ACI standards, including ACI 503.7, and are subject to the approval of the Engineer.
   2. Concrete that cannot be brought into compliance by approved repair methods will be rejected. Remove and replace rejected concrete work.

3. The cost of repairs and replacement of defective concrete shall be borne by the Contractor.

B. Repair Methods:
1. Damaged/defective concrete or concrete with crack widths exceeding 0.004 inches at liquid-containing and conveying structures or crack widths exceeding 0.006 inches for other structures shall be repaired by one of the following methods (only the Engineer may determine that a defect or crack does not require repair):
   a. Perform watertightness testing and repair as needed to meet leakage criteria in this specification even when liquid-containing and conveying structures meet the crack width criteria defined above.
   b. Damaged or defective concrete includes surface defects, honeycomb, rock pockets, indentations greater than 3/16 inch, spalls, chips, air bubbles greater than 1/2-inch diameter, pinholes, bugholes, embedded debris, lift lines, sand lines, bleed lines, leakage from form joints, fins, projections, form popouts, texture irregularities, and stains or other color variation that cannot be removed by cleaning.
      1) Damaged or defective concrete is repaired according to procedures outlined above under finish requirements, Repair of Surface Defects. Crack Repair Method 1:
   c. Fill the joint or crack by drilling holes to the affected area (following the product manufacturer's details), install injection ports, and force epoxy or chemical grout (expanding urethane) into the joint under pressure.
   d. Material type and repair procedures shall be approved by Engineer.
   e. After injection and curing; ports, sealing mix, and surface shall be cleaned and worked to match the adjacent specified finish.
2. Crack Repair Method 2:
   a. Fill cracks with low viscosity epoxy, applied by pouring/flooding crack zone until cracks are filled. Prepare surface, install, and cure according to manufacturer's recommendations.
   b. At a minimum, prepare surface to be clean and dry with no visible detrimental material in cracks to be filled. Conform to temperature limitations of epoxy. Clean and refinish to match adjacent surfaces.
3. Crack Repair Method 3:
   a. Cut a bevel groove 3/8 to 1/2 inch in width and depth, use backer rod or tape, and fill with sealant in accordance with manufacturer's instructions.
   b. This repair method is only used where approved by the Engineer.
   c. Groove and sealant shall be applied on wet or hydrostatic pressure side of surface.

C. Repair Method Use:
1. Repair Method 1: For cracks in walls, surfaces sloped 1:1 or greater, beams, columns, structural slabs, overhead surfaces, and liquid retaining surfaces. Need for repair depends upon crack width, location, and leakage.

2. Epoxy grout is used for repair of structural cracks and chemical grout (expanding urethane) for repair of non-structural cracks at liquid-containing structures. The Engineer shall determine whether a crack is classified as structural or non-structural.
3. Repair Method 2: Utilized in lieu of Method 1 for slabs when approved by City. Final finish shall match adjacent surfaces.
4. Repair Method 3: Limited to dry-surface slabs, walls subject to less than three feet of liquid pressure, or as approved by the Engineer. Repair Method 3 is not an equivalent repair method to Repair Methods 1 or 2, which shall be considered the standards.

3.18 WATERTIGHTNESS TESTING AND REPAIR

A. Liquid Containing Concrete Tanks And Channels:
   1. Watertightness testing shall comply with ACI 350.1 and the following requirements:
   2. Concrete tanks, basins, reservoirs and channels which have walls or slabs subjected to hydrostatic pressure shall be tested for watertightness. The tests shall be made after the structure is complete and the concrete has achieved its specified 28-day strength.
   3. Filling of the tank for watertightness testing shall not exceed a rate of 4 feet/hour. Fill with water to the maximum operating water surface. Keep water at this level for at least 72 hours prior to start of test. Testing includes visual inspection of the dry sides of all walls (where visible), wall base construction joint at top of the slab, and the soffit of elevated slabs for evidence of leakage. Damp spots, leakage, or seepage revealed by the test, including those caused by shrinkage of concrete, honeycombed areas, construction joints, or other sources shall be repaired by Repair Method 1 (see Repair Methods paragraph in the Repair of Damaged Concrete and Cracking article above).
   4. Damp spots are defined as areas from which water that can be picked up on dry hand and smeared across the dry concrete surface.
   5. Re-test tanks or channels which have been repaired to check the suitability of repairs.
   6. Provide water required for testing and re-testing and dispose of in an approved manner.

      After repair of visual leakage, liquid containing or conveying concrete structures supported on soil must also meet maximum leakage criteria into the soil through their base slab or mat foundation as follows:

Structure Type	Tightness Criterion
Containment structures fully lined prior to hydrostatic test	No measurable loss
Rectangular basins and tanks	0.050 percent per day

Note: All damp spots and/or leakage through walls, wall-to-slab joints, and elevated slabs shall first be repaired as described above. Leakage into soil equal to or less than the values shown in the table above is permitted only through base slabs on soil or mat foundations.

7. Record volume loss by measuring the vertical distance from the water surface to a fixed point on the tank above the water surface. Account for evaporation from open surfaces.
8. If the drop-in water surface during the 24-hour test period exceeds the values given in the table above, exclusive of evaporation, the leakage is considered excessive and shall be remedied.

3.19 CLEANUP

A. Upon completion of the work and prior to final inspection, clean all concrete surfaces as follows: Sweep with a broom to remove loose dirt, then mop and/or flush with clean water. Scrub by hand or machine as required to remove and blend stains or discolored areas.

B. Clean floors that have curing and sealing compound as stated above, followed by the final application of curing and sealing compound.

END OF SECTION

SECTION 03 30 50
CAST-IN-DRILLED-HOLE PILES

PART 1 GENERAL

1.01 DESCRIPTION

A. This section covers requirements for the contract item Cast-in-Drilled-Hole Piles. Piles are 36 inch diameter placed in the work as shown. This work includes:
   1. Drilling holes for new piles and backfill with native soil to original grade providing casing as required for stability of the hole.
   2. Furnishing and installing steel reinforcement and concrete in the holes for the development of cast-in-drilled-hole (CIDH) piles. Also includes steel reinforcement above CIDH, connecting CIDH to pile cap or structural slab.

B. Concrete and steel reinforcement included in the work for cast-in-drilled-hole (CIDH) piles shall conform to Section 03 20 00 – CONCRETE REINFORCING and Section 03 30 00 – CAST-IN-PLACE CONCRETE.

1.02 RELATED SECTIONS

A. Supplementary General Conditions, General Conditions, Division 1 sections, and Drawings apply to this section. This section may require direct correlation with the following sections of the contract:
   1. Section 03 20 00 – Concrete Reinforcing.
   2. Section 03 30 00 – Cast-in-Place Concrete.

1.03 REFERENCED

A. The references listed below are a part of this section. Where a referenced document contains references to other standards, those documents are included as references under this section as if referenced directly. In the event of conflict between the requirements of this section and those of the listed documents, the requirements of this section shall prevail.

Reference	Title
ACI 315R	Manual of Engineering and Placing Drawings for Reinforced Concrete Structures

1.04 SUBMITTALS

A. The Contractor shall submit the following:
   1. Work Site Access:
      a. A copy of this specification section with each paragraph check-marked to indicate specification compliance or marked to indicate requested deviations from specification requirements.
   2. Working Drawings:

a. Proposed method of drilling pile holes. Include weight and height of drilling equipment.
b. Complete bending diagrams, placing lists, and placing drawings for reinforcement in concrete piles. Detailing shall comply with ACI 315.
c. Placing drawings shall show bars in their correct positions.
d. Placing drawings shall include information necessary for complete fabrication and placing of reinforcing steel, bar supports, splices, dowels, ties, and temporary support steel.
e. Proposed method of placing concrete.

PART 2 PRODUCTS

2.01 MATERIALS

A. Concrete: Concrete shall be in conformance with Section 03 30 00 – CAST-IN-PLACE CONCRETE.

B. Steel Reinforcement: Steel reinforcement shall be in conformance with Section 03 20 00 – CONCRETE REINFORCING.

PART 3 EXECUTION

3.01 INDICATOR PILES

A. The Contractor shall demonstrate the adequacy of the methods and equipment to be employed for excavating shafts by successfully constructing method test shafts. A minimum of three test shafts shall be constructed. The method test shafts shall include drilling, reinforcing steel, thread bars, and concrete placement.

B. Method test shafts shall be positioned away from the drilled shafts in the location indicated or where approved by the Engineer in writing. Method test shafts shall be drilled to the maximum depth of any drilled shaft indicated.

C. Failure to demonstrate the adequacy of methods and equipment shall be sufficient reason for the Engineer to require alterations in equipment and methods by the Contractor to eliminate unsatisfactory results.

D. Once approval has been given to construct drilled shafts, no change will be permitted in the methods or equipment used to construct the satisfactory method test shaft without the written approval of the Engineer.

3.02 LOAD TESTS

A. Requirements:

1. The Contractor shall perform compression load tests, tension load tests and lateral load tests as required to determine whether or not the shafts can carry and withstand the imposed loads. Tests shall be performed on the method test

shafts. Except for shafts required for testing, additional shaft construction will not be permitted until the load tests are completed.

2. The Contractor shall provide all equipment and apparatus as required to conduct the tests.
3. The Contractor shall install, remove, relocate, and reinstall weights and components as necessary to perform and complete the tests.
4. Tests can be conducted as soon as practicable after the concrete in each drilled shaft has attained the specified 28-day compressive strength, but not until at least 10 days have elapsed after placing the concrete.

B. Compression Load Tests: Tests shall be performed in accordance with ASTM D1143. Method of load test shall follow “Quick Load Test Method for Individual Piles” as specified in ASTM D1143, Section 5.6. The maximum test load shall be at least twice the design load as prescribed by the Engineer. Apply the load in increments equal to 10 percent of the maximum test load, with a constant time interval between increments of 5 minutes. Maintain the maximum test load for not less than 15 minutes unless the shaft has failed as determined by the Engineer. Remove the test load in increments equal to 25 percent of the maximum test load, with a constant time interval between increments of 5 minutes.

C. Tension Load Tests: Tests shall be performed in accordance with ASTM D3689. Method of load test shall follow “Quick Load Test Method for Individual Piles” as specified in ASTM D3689, Section 7.7. The maximum test load shall be at least twice the design load as prescribed by the Engineer. Apply the load in increments equal to 10 percent of the maximum test load, with a constant time interval between increments of 5 minutes. Maintain the maximum test load for not less than 15 minutes unless the shaft has failed as determined by the Engineer. Remove the test load in increments equal to 25 percent of the maximum test load, with a constant time interval between increments of 5 minutes.

D. Lateral Load Tests: Tests shall be performed in accordance with ASTM D3966. Method of load test shall follow “Standard Loading Procedures” as specified in ASTM D3966, Section 6.1.

3.03 DRILLING HOLES

A. Notify the Engineer and Project Geologist at least 48 hours before placing drilling equipment at the site and before starting drilling operations. Unless inspection is waived in each specific case, drill holes only in the presence of the Soils Engineer.

B. The axis of the hole shall not deviate from plumb more than 1-1/2 inches per 10 feet of length.

C. Use caution during drilling to prevent disturbing the foundation material surrounding the pile. Equipment or methods used for excavating holes shall not cause scouring or caving of the hole. The drilled surfaces shall be kept rough and uneven for interlocking of concrete to the foundation surface.

D. After drilling begins, construct the pile expeditiously in order to prevent deterioration of the surrounding foundation material from air slaking or from the presence of water.

1. Remove deteriorated foundation material, including material that has softened, swollen or degraded, from the sides and the bottom of the hole.

E. Steel Casing: Where necessary to prevent caving of the hole, install temporary steel casing and place tight in the hole.

1. Temporary casing shall be watertight and of sufficient strength to withstand the loads from installation, removal, lateral concrete pressures and earth pressures.

2. In a dewatered hole, maintain the concrete in the casing at a level at least 5 feet above the bottom of the casing or at a level above the bottom of the casing adequate to prevent displacement of the concrete by material from outside the casing, whichever is greater.

3. Remove the casing while concrete is being placed.

3.04 WATER REMOVAL

A. Prior to placing concrete, remove any water that has infiltrated the hole. Do not allow fluvial or drainage water to enter the hole.

B. If necessary to control water, install temporary steel casings and place tight in the hole. Install and remove casing as specified in Paragraph 3.01 E.

3.05 PLACING STEEL REINFORCEMENT

A. Remove any loose sand, gravel, dirt, and drill cuttings before placing reinforcement or concrete.

B. Place reinforcement and secure symmetrically about the axis of the pile. Block reinforcement securely, to clear the sides of the hole.

3.06 PLACING CONCRETE

A. After placing reinforcement and prior to placing concrete, if caving occurs or deteriorated foundation material accumulates on the bottom of the hole, as determined by the Soils Engineer, remove reinforcement and clean bottom of hole.

B. Notify the Engineer at least 24 hours before start of concrete placement. Unless inspection is waived in each specific case, place concrete only in the presence of the Soils Engineer.

C. Deliver and place concrete within a maximum of 90 minutes from batching.

D. CIDH piles shall be constructed so that the excavation methods and the concrete placement procedures shall provide for placing the concrete against undisturbed material in a dry or dewatered hole. Concrete shall be dense and homogeneous, and the methods used to place the concrete shall prevent segregation. Concrete placed in steel shells, dry drilled holes, or dewatered drilled holes shall not be permitted to fall from a height greater than 8 feet without the use of adjustable length

pipes or tubes unless the flow of concrete is directed into the center of the hole using a hopper and not allowed to strike the reinforcement, reinforcement bracing and other objects in the hole.

E. Vibrate concrete in the upper 15 feet of pile.

F. After placing concrete, the temporarily exposed surfaces of the CIDH piles shall be cured to prevent cracking.

3.07 DISPOSAL

A. Remove drill cuttings and other waste materials from the work site as the Contractor's property.

B. Maximum use shall be made of usable excavated drilling material for compacted backfill and common fill in accordance with Section 31 23 00 - EXCAVATION AND FILL.

END OF SECTION

THIS PAGE INTENTIONALLY LEFT BLANK

SECTION 03 60 00
GROUTING

PART 1 GENERAL

1.01 DESCRIPTION

A. Section includes: Grout for column base plates, other structural supports, equipment bases, reinforcing bar dowels if noted on drawings, surface repair, grout toppings, patching of fresh concrete, and uses other than masonry. Adhesive anchor bolt grouting is specified in Section 05 05 20 – ANCHOR BOLTS.

1.02 RELATED SECTIONS

A. This section contains specific references to the following related sections. Additional related sections may apply that are not specifically listed below.
   1. Section 03 30 00 - Cast In Place Concrete
   2. Section 05 05 20 - Anchor Bolts

1.03 REFERENCES:

A. The references listed below are a part of this section. Where a referenced document contains references to other standards, those documents are included as references under this section as if referenced directly. In the event of conflict between the requirements of this section and those of the listed documents, the requirements of this section shall prevail.

Reference	Title
ASTM C109	Test Method for Compressive Strength of Hydraulic Cement Mortars (Using 2 inch or 50 mm Cube Specimens)
ASTM C230	Flow Table for Use in Tests of Hydraulic Cement
ASTM C307	Standard Test Method for Tensile Strength of Chemical-Resistant Mortar, Grouts, and Monolithic Surfacings
ASTM C939	Test Method for Flow of Grout for Preplaced-Aggregate Concrete (Flow Cone Method)
ASTM C531	Standard Test Method for Linear Shrinkage and Coefficient of Thermal Expansion of Chemical-Resistant Mortars, Grouts, Monolithic Surfacings, and Polymer Concretes
ASTM C579	Standard Test Methods for Compressive Strength of Chemical-Resistant Mortars, Grouts, Monolithic Surfacings and Polymer Concretes
ASTM C882	Standard Test Method for Bond Strength of Epoxy-Resin Systems Used with Concrete by Slant Shear
ASTM C942	Standard Test Method for Compressive Strength of Grouts for Preplaced-Aggregate Concrete in the Laboratory
ASTM C1107	Packaged Dry, Hydraulic-Cement Grout (Non-shrink)

Reference	Title
ASTM C1181	Standard Test Methods for Compressive Creep of Chemical-Resistant Polymer Machinery Grouts
ASTM E329	Agencies Engaged in Construction Inspection, Testing, or Special Inspection
COE CRD-C611	Flow of Grout for Preplaced Aggregate Concrete
COE CRD-C621	Non-shrink Grout
CBC	California Building Code

1.04 SUBMITTALS

A. Action Submittals:
   1. Procedure: Section 01 33 00 – SUBMITTAL PROCEDURES:
   2. A copy of this specification section with each paragraph check-marked to indicate specification compliance or marked to indicate requested deviations from specification requirements.
   3. Check-marks (✓) shall denote full compliance with a paragraph as a whole. Deviations shall be underlined and denoted by a number in the margin to the right of the identified paragraph. The remaining portions of the paragraph not underlined will signify compliance on the part of the Contractor with the specifications. Include a detailed, written justification for each deviation. Failure to include a copy of the marked-up specification sections, along with justification(s) for any requested deviations to the specification requirements, with the submittal shall be sufficient cause for rejection of the entire submittal with no further consideration.
   4. Complete product literature, including mixing, handling and placement instructions for the following: Cementitious non-shrink grout, epoxy grout, adhesive for reinforcing bar dowel grouting, concrete repair mortar, and prepackaged cement grout products to be used on the project.
   5. Mix design for cement grout that is not prepackaged, including product data for aggregates and cement in accordance with Section 03 30 00 – CAST-IN-PLACE-CONCRETE.
   6. Current ICC Evaluation Service reports for adhesives used for reinforcing dowels.
   7. Installer certification in accordance with ACI/CRSI Adhesive Anchor Installer Certification Program for installers of horizontal or upwardly inclined reinforcing bar dowels grouted using adhesive.
   8. Certified test results verifying the compressive strength, shrinkage and expansion requirements specified herein.

1.05 QUALITY ASSURANCE

A. Quality Control by City:
   1. The City will provide the services of a qualified Special Inspector in accordance with Section 01 45 33 – SPECIAL INSPECTIONS, OBSERVATIONS, AND

TESTING.

2. Adhesive anchors installed in horizontal or upwardly inclined orientations to resist sustained tension loads shall be continuously inspected during installation by a Special Inspector.
   a. The Special Inspector shall furnish a report to the Engineer, City's Representative and Building Official that the work covered by the report has been performed and that the materials used and the installation procedures used conform with the approved Project Manual and the Manufacturer's Printed Installation Instructions (MPII).

B. Quality Control by Contractor:
   1. Provide the services of an independent testing laboratory which complies with the requirements of ASTM E329 if a product other than those listed below is proposed and test data is not available from the supplier to demonstrate equivalence to the specified grout. The testing laboratory shall sample and test the proposed grout materials. Costs of testing laboratory services shall be borne by the Contractor.

C. Certifications:
   1. Installer certification shall be in accordance with ACI/CRSI Adhesive Anchor Installer Certification Program for installers of horizontal or upwardly inclined reinforcing bar dowels grouted using adhesive.

D. Compression test specimens will be taken during construction from the first placement of each type of grout and at intervals thereafter as selected by the Engineer to insure continued compliance with these Specifications.
   1. Compression tests and fabrication of specimens for epoxy grout will be performed as specified in ASTM C579, Method B, at intervals during construction as selected by the Engineer. A set of three specimens will be made for testing at seven days and any other time period as appropriate.
   2. Compression tests and fabrication of specimens for cement grout and non-shrink grout will be performed as specified in ASTM C109 at intervals during construction as selected by the Engineer. A set of three specimens will be made for testing at seven days, 28 days and any additional time period as appropriate.

E. Manufacturer Qualifications:
   1. Manufacturer shall have verifiable experience in producing products substantially similar to that required and shall be able to submit documentation of satisfactory installations.
   2. When required, provide services of manufacturer's full-time employee, factory-trained in handling, use, and installing the products required, with verifiable experience in field applications of the products required.

PART 2 PRODUCTS

2.01 CEMENTITIOUS NON-SHRINK GROUT

A. The grout material shall be an approved ready to use mixture requiring only water for

use at the job site. The 2-inch cubes shall have a minimum compressive strength of 3,000 psi at 7 days and 7,000 psi at 28 days.

B. Cementitious non-shrink non-metallic aggregate grout shall be:
   1. BASF, Masterflow 928
   2. Euclid Chemical Company, Hi-Flow Grout
   3. Five Star Products, Inc., Five Star Grout
   4. Sika Corporation, SikaGrout 212
   5. Approved Equal

C. Non-shrink grout shall conform to CRD-C 621 and ASTM C1107, Grade B or C when tested at a maximum fluid consistency of 30 seconds per ASTM C939 at temperature extremes of 45 degrees Fahrenheit and 90 degrees Fahrenheit and an extended working time of 15 minutes.

D. Fluid grout shall pass through the flow cone, with continuous flow, one hour after mixing.

2.02 EPOXY GROUT FOR EQUIPMENT MOUNTING:

A. Epoxy grout shall be a pourable, non-shrink, 100-percent solids system.

B. Epoxy grout for equipment mounting shall be a non-cementitious, resin based, multi-component formulation. Epoxy grout shall be flowable, with shrinkage minimized to achieve minimum 98% effective bearing area. Epoxy grout shall be:
   1. BASF, Masterflow 648
   2. Euclid Chemical Company, E3-G
   3. Sika Corporation, Sikadur 42
   4. Approved Equal.

C. The following properties shall be attained with the minimum quantity of aggregate allowed by epoxy grout manufacturer.
   1. Length change after hardening shall be less than 0.0006-inch per inch and coefficient of thermal expansion shall be less than 0.00003-inch per inch per degree F when tested in accordance with ASTM C531.
   2. Compressive creep at one year shall be less than 0.001-inch per inch when tested under a 400-psi constant load at 140 degrees F in accordance with ASTM C1181.
   3. Minimum seven-day compressive strength shall be 14,000 psi when tested in accordance with ASTM C579
   4. Grout shall be capable of maintaining at least a flowable consistency for minimum of 30 minutes at 70 degrees F.
   5. Shear bond strength to portland cement concrete shall be greater than shear strength of concrete when tested in accordance with ASTM C882/C882M.

2.03 ADHESIVE FOR GROUTING REINFORCING BAR DOWELS

A. Adhesive for setting dowels in concrete shall be an injectable two-component epoxy adhesive. Adhesive shall be approved for the intended use per the product ICC Report. Adhesive shall be:
   1. Hilti, HIT-RE 500 v3
   2. Simpson Strong Tie, SET XP
   3. Approved Equal (equivalent product must have ICC approval for use in cracked concrete in areas with high seismic risk).

2.04 CONCRETE REPAIR MORTAR

A. Horizontal Applications: Repair mortars shall be:
   1. BASF, MasterEmaco S 466CI
   2. Sika Corporation, SikaTop 111 Plus
   3. Approved Equal

B. Vertical and Overhead Applications: Repair mortars shall be:
   1. BASF, MasterEmaco 1500HCR Vertical Overhead
   2. Sika Corporation, SikaTop 123 Plus
   3. Approved Equal

2.05 CEMENT GROUT

A. Cement grout shall be comprised of cement, fine aggregate, coarse aggregate, water, and admixtures proportioned and mixed in accordance with this Section.
   1. Minimum Compressive Strength: 4,500 psi at 28 days.
   2. Maximum Water Cement Ratio: 0.42 by weight.
   3. Coarse Aggregate: ASTM C33/C33M, No. 8 size.
   4. Fine Aggregate: ASTM C33/C33M, approximately 60 percent by weight of total aggregate.
   5. Air Content: Five percent (plus or minus one percent).
   6. Minimum Cement Content: 564 pounds per cubic yard.
   7. Slump for grout fill shall be adjusted to match placing and finishing conditions, and shall not exceed four inches.

PART 3 EXECUTION

3.01 EXAMINATION

A. Examine and accept existing conditions before beginning work.

3.02 CEMENTITIOUS NON-SHRINK GROUT

A. Non-shrink, cementitious, nonmetallic aggregate grout shall be used for column base plates, structural bearing plates, and all locations where the general term “non-shrink

grout" is indicated on the Drawings. Use of this grout to support the bearing surfaces of machinery shall be as specified in Section 43 05 13 or as detailed on the Drawings for specific locations or pieces of equipment. If guidance is not provided in locations noted above, use of non-shrink grout for equipment mounting shall be limited to equipment less than 25 horsepower or 1,000 pounds. Grout shall be placed and cured in accordance with the manufacturer's instructions.

B. Non-shrink cementitious grout shall not be used as a surface patch or topping. Non-shrink cementitious grout must be used in confined applications only.

3.03 EPOXY GROUT FOR EQUIPMENT MOUNTING

A. Prepare concrete surfaces of equipment pads as indicated in details on the Drawings and as required by the epoxy grout manufacturer. Epoxy grout for equipment mounting shall be placed and cured in accordance with the requirements of Section 43 05 13 – RIGID EQUIPMENT MOUNTING, details on the Drawings, and in conformance with manufacturer's recommendations.

3.04 ADHESIVE FOR GROUTING REINFORCING BAR DOWELS

A. Follow manufacturer's instructions.

3.05 CONCRETE REPAIR MORTAR

A. Concrete repair materials and procedures shall be submitted for review to the City's Representative and shall be accepted prior to commencement of the repair work.

B. Follow all manufacturer's instructions, including those for minimum and maximum application thickness, surface preparation and curing. Add aggregate as required per manufacturer's recommendations. Any deviations from the manufacturer's instructions shall be submitted for review to the City's Representative and shall be accepted prior to commencement of the work.

3.06 CEMENT GROUT

A. Cement grout shall be used for grout toppings less than four inches thick and for patching of fresh concrete.

B. Grouting shall comply with temperature and weather limitations in Section 03 30 00, CAST-IN-PLACE CONCRETE.

C. Cure grout in accordance with grout manufacturer's instructions for prepackaged grout and Section 03 30 00, CAST-IN-PLACE CONCRETE, for non-prepackaged cement grout.

END OF SECTION

SECTION 05 05 14
HOT-DIP GALVANIZING

PART 1 GENERAL

1.01 DESCRIPTION

A. Section includes: Hot-dip galvanizing of steel materials.

1.02 RELATED SECTIONS

A. This section contains specific references to the following related sections. Additional related sections may apply that are not specifically listed below.
   1. Section 09 90 00 - Protective Coating

1.03 REFERENCES:

A. The references listed below are a part of this section. Where a referenced document contains references to other standards, those documents are included as references under this section as if referenced directly. In the event of conflict between the requirements of this section and those of the listed documents, the requirements of this section shall prevail.

Reference	Title
ASTM A123	Zinc (Hot-Dip Galvanized) Coatings on Iron and Steel Products
ASTM A143	Safeguarding Against Embrittlement of Hot-Dip Galvanized Structural Steel Products and Procedure for Detecting Embrittlement
ASTM A153	Zinc Coating (Hot-Dip) on Iron and Steel Hardware
ASTM A384	Safeguarding Against Warpage and Distortion During Hot-Dip Galvanizing of Steel Assemblies
ASTM A385	Providing High-Quality Zinc Coatings (Hot-Dip)
ASTM A780	Repair of Damaged and Uncoated Areas of Hot-Dip Galvanized Coatings
ASTM B6	Zinc
ASTM D6386	Preparation of Zinc (Hot-Dip Galvanized) Coated Iron and Steel Product and Hardware Surfaces for Painting
ASTM E536	Test Methods for Chemical Analysis of Zinc and Zinc Alloys
DOD-P-21035A	Paint, High Zinc Dust Content, Galvanizing Repair

1.04 SUBMITTALS

A. Action Submittals
   1. Procedure: Section 01 33 00 – SUBMITTAL PROCEDURES.
   2. A copy of this specification section with each paragraph check-marked to indicate specification compliance or marked to indicate requested deviations from

specification requirements.

3. Check-marks (✓) shall denote full compliance with a paragraph as a whole. Deviations shall be underlined and denoted by a number in the margin to the right of the identified paragraph. The remaining portions of the paragraph not underlined will signify compliance on the part of the Contractor with the specifications. Include a detailed, written justification for each deviation. Failure to include a copy of the marked-up specification sections, along with justification(s) for any requested deviations to the specification requirements, with the submittal shall be sufficient cause for rejection of the entire submittal with no further consideration.
4. Coating applicator's Certificate of Compliance that the hot-dip galvanized coating meets or exceeds the specified requirements of ASTM A123 or A153, as applicable.

1.05 QUALITY ASSURANCE

A. Hot-dip galvanized coating applicator shall be a member of the American Galvanizing Association.

PART 2 PRODUCTS

2.01 MATERIALS

A. Zinc used for galvanizing shall conform to ASTM B6, and shall be at least equal to the grade designated as Prime Western.

B. Maximum amount of aluminum added to a galvanizing bath shall not exceed 0.01 percent.

C. Hot-Dip Galvanized Coating: Conform to ASTM A123 and A153, as applicable.

D. Repair: Zinc dust-zinc oxide coating conforming to DOD-P-21035A and containing 95 percent zinc in the dry film. Acceptable product is ZRC Cold Galvanizing Compound by ZRC Worldwide, or approved equal.

2.02 FABRICATION REQUIREMENTS

A. Fabrication practices for products to be galvanized: In accordance with applicable portions of ASTM A143, A384 and A385. Avoid fabrication techniques that could cause steel distortion or embrittlement.

B. Coordinate with steel detailer to provide vent and drain holes of sufficient size and quantity to achieve specified galvanized coating.

PART 3 EXECUTION

3.01 PREPARATION

A. Casting surfaces to be galvanized shall be sand blasted or ground smooth. When a smooth cast is required, castings shall be tumbled and all high spots ground flush.

Castings shall be normalized to prevent cracking. Malleable iron shall be safeguarded against embrittlement by pre-annealing.

B. Steel work shall be precleaned utilizing a caustic bath, acid pickle and flux or shall be blast cleaned and fluxed to obtain an acceptable surface for quality hot dip galvanizing.

3.02 APPLICATION

A. Steel Members, Fabrications, and Assemblies: Hot-dip galvanize after fabrication in accordance with ASTM A123.

B. Steel Bolts, Screws, Nuts, Washers and Hardware Components: Hot-dip galvanize in accordance with ASTM A153.

3.03 COATING REQUIREMENTS

A. Hot-dip Coating Thickness: Conform to ASTM A123 or ASTM A153, as applicable.

3.04 TESTING

A. Chemical analysis for impurities in the bath shall be made in conformity with ASTM E536.

B. Test Requirements and Methods: In accordance with ASTM A123 or ASTMA153, as applicable.

3.05 GALVANIZED SURFACES TO BE PAINTED

A. Where galvanized surfaces are specified to be painted in Section 09 90 00 or elsewhere in the Project Manual, conform to ASTM D6386.

3.06 REPAIR OF DEFECTIVE GALVANIZED COATING

A. Where zinc coating has been damaged after installation, clean substrate surface and repair with zinc dust-zinc oxide coating in accordance with ASTM A780. Apply zinc dust-zinc oxide coating in accordance with manufacturer's recommendation. Apply multiple coats to achieve a minimum film thickness of 8 mils.

B. Remove items not physically damaged, but which have insufficient or deteriorating zinc coatings, and items damaged in shipment or prior to installation, from the project site for repair by the hot-dip zinc coating method.

END OF SECTION

THIS PAGE INTENTIONALLY LEFT BLANK

SECTION 05 05 20
ANCHOR BOLTS

PART 1 GENERAL

1.01 SUMMARY

A. Section includes: Bolts and all-thread rods used to attach structural elements and equipment to concrete and concrete masonry. Included are cast-in-place and post-installed anchors (adhesive systems and wedge type expansion anchors), nuts and washers.

B. Cast-in-place and post-installed anchors shall be Type 304/316 stainless steel unless noted otherwise.

1.02 RELATED SECTIONS

A. This section contains specific references to the following related sections. Additional related sections may apply that are not specifically listed below.
   1. Section 01 88 15 - Anchorage and Bracing
   2. Section 03 30 00 - Cast-In-Place Concrete
   3. Section 03 60 00 - Grouting
   4. Section 43 05 13 - Rigid Equipment Mounts

1.03 REFERENCES

A. The references listed below are a part of this section. Where a referenced document contains references to other standards, those documents are included as references under this section as if referenced directly. In the event of conflict between the requirements of this section and those of the listed documents, the requirements of this section shall prevail.

Reference	Title
ACI 318	Building Code Requirements for Structural Concrete
ASTM A193	Alloy-Steel and Stainless Steel Bolting for High Temperature or High Pressure Service and Other Special Purpose Applications
ASTM A194	Carbon and Alloy Steel Nuts for Bolts for High Pressure or High Temperature Service, or Both
ASTM A320	Alloy-Steel and Stainless Steel Bolting for Low-Temperature Service
ASTM A563	Carbon and Alloy Steel Nuts
ASTM F593	Stainless Steel Bolts, Hex Cap Screws, and Studs
ASTM F594	Stainless Steel Nuts
ASTM F844	Washers, Steel, Plain (Flat), Unhardened for General Use
ASTM F1554	Anchor Bolts, Steel, 36, 55, 105-ksi Yield Strength
CBC	California Building Code with local amendments

1.04 SUBMITTALS

A. Action Submittals

1. Procedures: Section 01 33 00 – SUBMITTAL PROCEDURES.
2. A copy of this specification section with each paragraph check-marked to indicate specification compliance or marked to indicate requested deviations from specification requirements.
3. Check-marks (✓) shall denote full compliance with a paragraph as a whole. Deviations shall be underlined and denoted by a number in the margin to the right of the identified paragraph. The remaining portions of the paragraph not underlined will signify compliance on the part of the Contractor with the specifications. Include a detailed, written justification for each deviation. Failure to include a copy of the marked-up specification sections, along with justification(s) for any requested deviations to the specification requirements, with the submittal shall be sufficient cause for rejection of the entire submittal with no further consideration.
4. Anchor bolt placement plans.
5. Anchor bolt, nut, and washer material information, including material certifications.
6. Record copy of design calculations and details showing the required diameter, length, embedment, edge distance, confinement, anchor reinforcement, anchor bolt sleeves, connection redesign, and other conditions, stamped and signed by a Professional Civil Engineer or Structural Engineer currently registered in the state of California. Calculations shall comply with the provisions of ACI 318-14, Chapter 17. Base anchor capacity determination on cracked concrete condition and compressive strength of new concrete per Section 03 30 00. Assume compressive strength of existing concrete is 4,000 psi unless otherwise noted.
7. Submit record copy of proof loading test results within five days after test.
8. Product Data:
   a. ICC Evaluation Service Reports and research reports in accordance with the San Diego Planning and Development Services Department requirements for post-installed adhesive type anchors and expansion (wedge type) anchors when allowed. Products shall be ICC approved for use in cracked concrete in high seismic areas (Seismic Design Category D, E and F).
   b. Product data indicating load capacity charts/calculations.
   c. Chemical resistance.
   d. Temperature limitations.
   e. Manufacturers written installation instructions.
9. Installer certification for horizontal or upwardly inclined adhesive anchors in accordance with ACI/CRSI Adhesive Anchor Installer Certification Program.

1.05 QUALITY ASSURANCE

A. Quality Assurance By City:

1. Special inspection of anchor bolts shall be performed by the Special Inspector under contract with the City and in accordance with the CBC, Chapter 17.

2. A five percent sample of installed post-installed anchors shall be proof-loaded by an independent laboratory contracted by the Contractor. The quantity of samples and locations shall be coordinated with the City.
3. Adhesive anchors installed in horizontal or upwardly inclined orientations to resist sustained tension loads shall be continuously inspected during installation by a Special Inspector.
4. The Special Inspector shall furnish a report to the Engineer, City, and Building Official that the work covered by the report has been performed and that the materials used and the installation procedures used conform with the approved Project Manual and the Manufacturer's Printed Installation Instructions (MPII).

B. Certifications:
1. Installer certification shall be in accordance with ACI/CRSI Adhesive Anchor Installer Certification Program for installers of horizontal or upwardly inclined adhesive anchors.

PART 2 PRODUCTS

2.01 GENERAL

A. Anchor bolt holes in equipment support frames shall not exceed the bolt diameters by more than 1/4 inch. Anchor bolt holes that exceed bolt diameters by more than 1/16-inch shall be covered by plate washers as specified on Drawings. Minimum anchor bolt diameter shall be 1/2 inch, or 3/8 inch for small bore pipe supports. Anchor bolts for equipment mounting and vibration isolation systems shall be provided as specified in Sections 43 05 13 and 43 05 18, respectively.

B. Tapered washers shall be provided where mating surface is not square with the nut.

C. Anchor bolts shall be cast-in-place anchors unless post-installed anchors are specified or shown on the Drawings. Substitution of post-installed anchors will not be permitted unless specifically requested by the Contractor and approved by the Engineer.

2.02 PERFORMANCE/DESIGN CRITERIA

A. Anchor bolts for equipment shall be designed by the equipment manufacturer to include equipment operational loads combined with seismic and wind forces when applicable. Design criteria provided in Section 01 88 15.

B. Design anchor bolts for support and bracing of non-structural components and non-building structures for loading specified in Section 01 88 15.

2.03 MATERIALS

A. Anchor bolt materials shall be as specified in the following table:

Material	Specification
Stainless Steel Anchor Bolts	ASTM A193 or A320, Type 316

Material	Specification
Stainless Steel Threaded Rods	ASTM F593, Type 316
Stainless Steel Nuts	ASTM A194 Heavy Hex Nuts, Type 316 ASTM F594 Heavy Hex Nuts at Adhesive Anchors, Type 316 ASTM A194 Heavy Hex Nuts Grade 8S (Nitronic 60) at equipment anchorage only
Stainless Steel Washers	Type 316 to match bolt material
Carbon Steel Anchor Bolts	ASTM F1554, Grade 36, Hot Dip Galvanized
High-Strength Carbon Steel Anchor Bolts	ASTM F1554, Grades 55 and 105, Weldable per Supplementary Requirement S1, Hot Dip Galvanized
Carbon Steel Nuts and Washers	ASTM A563 and F844, Heavy Hex, Hot-Dip Galvanized
Concrete Adhesive Anchors	Hilti “HIT-RE 500v3”, Simpson Strong-Tie “SET-XP”, or approved equal, with Type 316 Stainless Steel threaded rods
Concrete Expansion (wedge) Anchors *	Hilti “KWIK BOLT TZ”, or approved equal, Type 316 Stainless Steel

**Post installed anchors shall always be an adhesive type anchor system except where noted otherwise or when Contractor makes a request for a specific application and Engineer approves.*

2.04 STAINLESS STEEL FASTENER LUBRICANT (ANTI-SEIZING)

A. Anti-seizing Lubricant for Stainless Steel Threaded Connections:
   1. Suitable for potable water supply.
   2. Formulated to resist washout.
   3. Acceptable manufacturers are Bostik, Saf-T-Eze, or approved equal.

2.05 ANCHOR BOLT SLEEVES

A. Provide anchor bolt sleeves as shown on design drawings and as required by equipment manufacturer’s design.
   1. Provide high density polyethylene plastic sleeves of single unit construction with deformed sidewalls such that the concrete and grout lock in place.
   2. The top of the sleeve shall be self-threading to provide adjustment of the threaded anchor bolt projection.
   3. Acceptable manufacturers are Contec, Wilson, or approved equal.

PART 3 EXECUTION

3.01 GENERAL

A. Anchor bolts shall be cast-in-place anchors unless post-installed anchors are specified or shown on the Drawings.

B. Grouting of anchor bolts using plastic sleeves with non-shrink or epoxy grout, where specified, shall be in accordance with Section 03 60 00.

C. The threaded end of anchor bolts and all-thread rods shall be long enough to project through the entire depth of the nut plus 2 turns and if too long, shall be cut off at ½-inch beyond top of nut.

3.02 CAST-IN-PLACE ANCHOR BOLTS

A. Anchor bolts to be embedded in concrete shall be placed accurately and held in correct position using templates while the concrete is placed.

B. After anchor bolts have been embedded, their threads shall be protected by grease and the nuts run on.

3.03 ADHESIVE ANCHOR BOLTS

A. Note that adhesive anchors shall not be substituted for cast-in-place anchor bolts unless the adhesive anchors have been specified or shown on the Drawings, or approval has been obtained from the Engineer that substitution of adhesive anchors is acceptable for the specific use and location. Use of adhesive anchors shall be subject to the following conditions:
   1. Limit to locations where intermittent or continuous exposure to the following is extremely unlikely:
      a. Acid concentrations higher than 10 percent
      b. Chlorine gas
      c. Machine or diesel oils
   2. Limit to applications where exposure to the following is extremely unlikely:
      a. Fire
      b. Concrete or rod temperature above 120 degrees F
   3. Overhead applications (such as pipe supports) shall not be allowed unless approved by the Engineer and installation is by an Installer specially certified for overhead applications.
   4. Approval from Engineer for specific application and from supplier of equipment to be anchored, if applicable.
   5. Anchor diameter and material shall be per Contract Documents or equipment manufacturer's specifications. Anchor shall be threaded or deformed the full length of embedment and shall be free of rust, scale, grease, and oils.
   6. Embedment depth shall be as specified or as required by the equipment manufacturer.
   7. Follow the anchor system manufacturer's installation instructions.
   8. Holes shall have rough surfaces created by using a hammer drill with carbide bit. Core drilled holes are not allowed.
   9. Holes shall be blown clean with oil-free compressed air and be free of dust or standing water prior to installation or follow cleaning requirements of the adhesive manufacturer. Follow additional requirements of the adhesive manufacturer.

10. Concrete and air temperature shall be compatible with curing requirements of adhesives per adhesive manufacturer's instructions. Anchors shall not be placed in concrete when the temperature is below 25 degrees F.
11. Anchors shall be left undisturbed and unloaded for full adhesive curing period, which is based on temperature of the concrete.

3.04 EXPANSION ANCHORS

A. Expansion (wedge type) anchors shall not be substituted for cast-in-place anchor bolts or adhesive anchors unless approved by the Engineer for a specific application. Use of expansion anchors shall be subject to conditions 4 through 9 as specified above for adhesive anchors. Expansion anchors shall not be used in a submerged condition or in mounting of equipment subject to vibration or cyclic motion.

3.05 REINFORCING STEEL CONFLICTS WITH POST-INSTALLED ANCHOR INSTALLATION

A. Locate and avoid all reinforcement prior to drilling into concrete.

B. When reinforcing steel is encountered in the drill path, slant drill to clear obstruction and provide beveled washer to match angle of anchor. Drill shall not be slanted more than 10 degrees.

C. Where slanting the drill does not resolve the conflict, notify the City and resolve the conflict to the satisfaction of the City in consultation with the Engineer.

D. Abandoned post-installed anchor holes shall be cleaned and filled with non-shrink grout and struck off flush with adjacent surface.

E. The costs of determining and executing the resolution shall be borne by the Contractor. The determination and execution of the resolution shall not result in additional cost to the City.

F. In order to avoid or resolve a conflict, locate embedded reinforcing steel using non-destructive methods and/or redesign the attachment.
   1. Redesign shall be done by the Contractor's Professional Civil Engineer or Structural Engineer currently registered in the state of California.
   2. Calculations and details for redesign shall be submitted.

END OF SECTION

SECTION 05 50 00
METAL FABRICATIONS

PART 1 GENERAL

1.01 SUMMARY

A. Section includes:
1. Custom fabricated metal items and certain manufactured units not otherwise indicated to be provided under work of other specification sections.
2. Seat angle frames
3. Iron castings
4. U-channel concrete inserts
5. Cover plates and frames
6. Pipe sleeves
7. Bollards
8. Stair handrails and guards
9. Ladders
10. Miscellaneous metal fabrications not covered elsewhere such as embed plates and welded heads studs.

1.02 RELATED SECTIONS

A. This section contains specific references to the following related sections. Additional related sections may apply that are not specifically listed below.
1. Section 01 88 15 - ANCHORAGE AND BRACING
2. Section 05 05 14 - HOT-DIP ZINC COATING
3. Section 05 05 20 - ANCHOR BOLTS
4. Section 09 90 00 - PROTECTIVE COATING

1.03 REFERENCES

The references listed below are a part of this section. Where a referenced document contains references to other standards, those documents are included as references under this section as if referenced directly. In the event of conflict between the requirements of this section and those of the listed documents, the requirements of this section shall prevail.

Reference	Title
Aluminum Design Manual	The Aluminum Association, Aluminum Design Manual with Specifications and Guidelines for Aluminum Structures
AISC 303	Code of Standard Practice for Steel Buildings and Bridges
AISC 360	Specification for Structural Steel Buildings

Reference	Title
AISC Steel Construction Manual	American Institute of Steel Construction, Manual of Steel Construction
ANSI A14.3	Standard for Ladders - Fixed - Safety Requirements
ASTM A36	Carbon Structural Steel
ASTM A48	Gray-Iron Castings
ASTM A53	Pipe, Steel, Black and Hot-Dipped, Zinc-Coated, Welded and Seamless
ASTM A108	Steel Bar, Carbon and Alloy, Cold-Finished
ASTM A123	Zinc (Hot Dip Galvanized) Coatings on Iron and Steel Products
ASTM A153	Zinc Coating (Hot-Dip) on Iron and Steel Hardware
ASTM A193	Alloy-Steel and Stainless Steel Bolting for High Temperature or High Pressure Service and Other Special Purpose Applications
ASTM A194	Carbon and Alloy Steel Nuts for Bolts for High Pressure or High Temperature Service, or Both
ASTM A240	Chromium and Chromium Nickel Stainless Steel Plate, Sheet, and Strip for Pressure Vessels and for General Applications
ASTM A276	Stainless Steel Bars and Shapes
ASTM A283	Low and Intermediate Tensile Strength Carbon Steel Plates
ASTM A307	Carbon Steel Bolts, Studs, and Threaded Rod 60000 psi Tensile Strength
ASTM A312	Seamless, Welded, and Heavily Cold Worked Austenitic Stainless Steel Pipes
ASTM A320	Alloy-Steel Bolting Materials for Low Temperature Service
ASTM A325	Structural Bolts, Steel, Heat Treated 120/105 ksi Minimum Tensile Strength
ASTM A380	Standard Practice for Cleaning, Descaling, and Passivation of Stainless Steel Parts, Equipment, and Systems
ASTM A384	Standard Practice for Safeguarding Against Warpage and Distortion During Hot-Dip Galvanizing of Steel Assemblies
ASTM A489	Carbon Steel Lifting Eyes
ASTM A500	Cold-Formed Welded and Seamless Carbon Steel Structural Tubing in Rounds and Shapes
ASTM A554	Welded Stainless Steel Mechanical Tubing
ASTM A563	Carbon and Alloy Steel Nuts
ASTM A572	High-Strength Low-Alloy Columbium-Vanadium Structural Steel
ASTM A653	Steel Sheet, Zinc Coated (Galvanized) or Zinc Iron Alloy Coated (Galvannealed) by the Hot Dip Process
ASTM A780	Repair of Damaged and Uncoated Areas of Hot Dip Galvanized Coatings
ASTM A786	Hot-Rolled Carbon, Low-Alloy, High-Strength Low-Alloy, and Alloy Steel Floor Plates
ASTM A793	Rolled Floor Plate, Stainless Steel
ASTM A924	Steel Sheet, Metallic-Coated by Hot-Dip Process

Reference	Title
ASTM A992	Structural Steel Shapes
ASTM A1011	Steel, Sheet and Strip, Hot-Rolled, Carbon, Structural, High-Strength Low-Alloy, High-Strength Low-Alloy with Improved Formability, and Ultra-High Strength
ASTM B209	Aluminum and Aluminum-Alloy Sheet and Plate
ASTM B210	Aluminum and Aluminum-Alloy Drawn Seamless Tubes
ASTM B211	Aluminum and Aluminum-Alloy Rolled or Cold Finished Bar, Rod, and Wire
ASTM B221	Aluminum and Aluminum-Alloy Extruded Bars, Rods, Wire, Profiles, and Tubes
ASTM B241	Aluminum and Aluminum-Alloy Seamless Pipe and Seamless Extruded Tube
ASTM B308	Aluminum-Alloy 6061-T6 Standard Structural Profiles
ASTM B429	Aluminum-Alloy Extruded Structural Pipe and Tube
ASTM B632	Aluminum-Alloy Rolled Tread Plate
ASTM D1056	Flexible Cellular Materials - Sponge or Expanded Rubber
ASTM F436	Hardened Steel Washers
ASTM F468	Nonferrous Bolts, Hex Cap Screws, Socket Head Cap Screws and Studs for General Use
ASTM F593	Stainless Steel Bolts, Hex Cap Screws, and Studs
ASTM F594	Stainless Steel Nuts
AWS D1.1	Structural Welding Code - Steel
AWS D1.2	Structural Welding Code - Aluminum
AWS D1.6	Structural Welding Code - Stainless Steel
SSPC SP5	White Metal Blast Cleaning
CBC	California Building Code

1.04 DEFINITIONS

A. Galvanize: Hot-dip galvanize per ASTM A123 or ASTM A153, per Section 05 05 14.

1.05 SUBMITTALS

A. Action Submittals:
   1. Procedures: Section 01 33 00.
   2. A copy of this specification section with each paragraph check-marked to indicate specification compliance or marked to indicate requested deviations from specification requirements.
   3. Check-marks (✓) shall denote full compliance with a paragraph as a whole. Deviations shall be underlined and denoted by a number in the margin to the right of the identified paragraph. The remaining portions of the paragraph not underlined will signify compliance on the part of the Contractor with the specifications. Include a detailed, written justification for each deviation. Failure to include a copy of the marked-up specification sections, along with justification(s) for any requested deviations to the specification requirements, with

the submittal shall be sufficient cause for rejection of the entire submittal with no further consideration

4. Manufacturer's product data.
5. Detailed Shop Drawings:
   a. Fabrication drawings showing layouts, connections to structural system, and anchoring details.
   b. Erection and installation drawings indicating thickness, type, grade, class of metal, coating system and dimensions.
   c. Construction details, reinforcement, anchorage, and installation with relation to the building construction.
6. Weld Procedure Specifications, Procedure Qualification Records, manufacturer electrode information, and welder certificates and qualifications.
7. U-Channel Concrete Inserts: Manufacturer's product description and allowable load tables.
8. Passivation method for stainless steel fabrications.

1.06 QUALITY ASSURANCE

A. Qualifications
   1. Fabricator shall have verifiable experience in fabrication of metal specified.

B. Certificates
   1. Certified welding procedures and welding operators in accordance with AWS. Welding operator certificates shall be current.

C. The use of salvaged, reprocessed or scrap materials will not be permitted.

D. Shop Assembly: Items in the shop shall be preassembled to the greatest extent possible, so as to minimize field splicing and assembly of units. Units shall be disassembled only to the extent necessary for shipping and handling limitations. Units shall be clearly marked for reassembly and coordinated installation.

1.07 DELIVERY, STORAGE AND HANDLING

A. Avoid damage during delivery and handling of fabrications.

B. Store off the ground on skids or other supports to keep items free of dirt and other foreign debris and to protect against corrosion.

PART 2 PRODUCTS

2.01 MATERIALS

Materials for miscellaneous metalwork are specified in the following table.

Material	Specification
Steel	

Material	Specification
Sheets, plates and shapes (except W shapes)	ASTM A36
W shapes	ASTM A992
Pipe	ASTM A53, Grade B
Square/rectangular tubing	ASTM A500, Grade B
Headed Anchor Studs	ASTM A108
Carbon steel bolts	ASTM A307, Grade A
High strength bolts	ASTM A325 (Type 1)
Nuts	ASTM A563
Washers	ASTM F436
Stainless Steel	
Sheet and Plates	ASTM A240, Type 316 or 316L
Shapes, bars, and similar items	ASTM A276, Type 316 or 316L
Pipe	ASTM A312, Type 316 or 316L
Headed Anchor Studs	ASTM A276, Type 316L
Bolts	ASTM F593, Type 316
Nuts	ASTM F594, Type 316
Aluminum	
Sheets and plates	ASTM B209, Type 6061-T6
Bars, flats and similar items	ASTM B211 or B221, Type 6061-T6
Shapes	ASTM B308, Type 6061-T6
Round tubing and pipe	ASTM B241, Type 6061-T6
Square and rectangular tubing	ASTM B221, Type 6063-T52
Pipe	ASTM B211 or B241, Type 6061-T6
Bolts, Stainless Steel	ASTM F593, Type 316
Nuts, Stainless Steel	ASTM F594, Type 316
Checker Plate	
Steel	ASTM A786
Stainless steel	ASTM A793, Type 304
Aluminum	ASTM B632, Type 6061-T6
Other steel items	
Iron castings	ASTM A48
Eyebolts	ASTM A489
Threaded rods	ASTM A36

2.02 FABRICATION

A. General:
   1. Conform to AISC or Aluminum Association standards as applicable. Where Code defined loads apply, also conform to CBC requirements.
   2. Shop and field welding shall conform to the requirements of AISC, the Aluminum Design Manual, and applicable AWS procedures and specifications as required by the material being welded.
   3. Grind exposed joints flush and smooth with adjacent finish surface. Make exposed joints butt, tight, flush, and hairline. Remove burrs and weld splatter. Ease exposed edges to small uniform radius.
   4. Holes shall be punched 1/16 inch larger than the nominal size of the bolts, unless otherwise specified. Whenever needed, because of the thickness of the metal, holes shall be subpunched and reamed or shall be drilled.
   5. Fabrication, including cutting, drilling, punching, threading and tapping required for fabrications or adjacent work, shall be performed prior to galvanizing.

B. Seat Angle Frames:
   1. Provide recessed seat angle frames for grating and floor plates. Miter corners to ensure accurate fit. Match depth of recess with grating or floor plate thickness. Anchor frames in concrete with headed studs. Steel angle support frames shall be stainless steel, ASTM A276, Type 316, unless indicated otherwise.

C. Iron Castings:
   1. Castings shall be as specified on the Drawings. Castings weighing less than 100 pounds shall be galvanized after machining. Castings weighing greater than 100 pounds shall be galvanized where specified.

D. U-Channel Concrete Inserts:
   1. U-Channel Concrete Inserts shall be galvanized conforming to attachment hardware and materials attached. Channels shall be 1 5/8-inch-wide by 1 3/8-inch-deep with a minimum thickness of 0.105 inches. Channels shall be open-bottom with curved or lipped flange edges to engage standard nuts and connection hardware. Load rating shall meet or exceed a 2,000-pound point load at 12 inch minimum spacing. Provide standard accessories and hardware per manufacturers recommendations.

E. Cover Plates and Frames:
   1. Fabricate aluminum cover plates weighing not more than 80 pounds per cover with a raised pattern nonslip top surface conforming to ASTM B632. Reinforce to sustain a live load of 100 pounds per square foot (foot traffic only) or as indicated on the Drawings. Frames shall be stainless steel angles and plates, with stainless steel headed anchors welded to frame for anchoring to concrete. Miter and weld corners and butt joint straight runs. Provide flush drop handles for removal. Remove sharp edges and burrs from cover plates and exposed edges of frames. Weld connections and grind top surface smooth. Provide 1/8-inch clearance at edges.

F. Pipe Sleeves:
   1. Unless otherwise indicated on the Drawings, fabricate pipe sleeves from schedule 40 steel pipe with 3/16-inch-thick by 3 inches wide seep ring continuously seal welded to the outside of the pipe. Galvanize after fabrication in accordance with ASTM A123.

G. Bollards:
   1. Provide minimum 6 inch galvanized standard weight steel pipe or as indicated on the Drawings. Pipe to be in accordance with ASTM A53. Anchor posts in concrete and fill solidly with concrete of a minimum compressive strength of 2500 psi. Coat galvanized pipe above grade in accordance with Section 09 90 00. Top coat cover color shall be safety yellow.

H. Other Miscellaneous Steel Metalwork:
   1. Other miscellaneous steel metalwork including embedded and non-embedded steel metalwork, hangers and inserts shall be as specified or shown on the Drawings, and shall be galvanized after fabrication unless otherwise noted.

2.03 FINISHES

A. Galvanizing:
   1. Galvanize items specified to be zinc-coated, after fabrication where practicable. Galvanizing in accordance with ASTM A123, ASTM A153, ASTM A653 or ASTM A924, Z275 G90, as applicable. Galvanize anchor bolts, grating fasteners, washers, and parts or devices necessary for proper installation, unless indicated otherwise.
   2. Repair damaged Zinc-Coated surfaces with galvanizing repair method and paint conforming to ASTM A780 or by application of stick or thick paste material specifically designed for repair of galvanizing, as approved by the City.
   3. Safeguard against warpage and distortion during galvanizing of steel in accordance with ASTM A384. Straighten items after galvanizing so that they are straight, free of racking and distortion.

B. Shop Painting:
   1. Prepare and coat surfaces in accordance with Section 09 90 00.
   2. Steel to be embedded in concrete shall be free of dirt and grease.

C. Aluminum Surfaces:
   1. Surface condition aluminum before finishes are applied. Remove roll marks, scratches, rolled-in scratches, kinks, stains, pits, orange peel, die marks, structural streaks, and other defects which will affect uniform appearance of finished surfaces.
   2. Aluminum finishes for unexposed sheet, plate and extrusions may have mill finish as fabricated.
   3. Provide other aluminum items with a standard mill finish.
   4. Provide a coating thickness not less than that specified for protection.

5. Provide decorative type finishes for items used in interior occupied locations or architectural type finish for items used in exterior locations.
6. Provide a polished satin finish on items to be anodized.

D. Stainless Steel Passivation:
1. Stainless steel to be cleaned, descaled, and passivated after fabrication in accordance with ASTM A380. Passivate to remove iron compounds from the surface of the stainless steel.

PART 3 EXECUTION

3.01 EXAMINATION

A. Verify measurements at the site. Include field dimensions in shop drawings.

B. Examine and accept existing conditions before beginning work.

3.02 PREPARATION

A. Make provisions for erection loads with temporary bracing. Keep work in alignment.

B. Supply items required to be cast into concrete with setting templates.

3.03 INSTALLATION

A. Install items plumb, level and square, accurately fitted, and free from distortion or defects. Install rigid, substantial, and neat in appearance.

B. Allow for erection loads and provide temporary bracing to maintain true alignment until completion of erection and installation of permanent attachments.

C. Fieldwork shall be limited on galvanized items. Areas damaged by fieldwork shall be repaired per requirements in 3.04.A.

D. Protect encased or embedded dissimilar metals (both metals must be encased or embedded) from galvanic corrosion by means of pressure tapes, coatings or isolators.

E. Place metalwork to be embedded in concrete accurately and hold in correct position while the concrete is placed or, if indicated, form recesses or blockouts in the concrete. Thoroughly clean the surfaces of metalwork in contact with or embedded in concrete.

F. Seat angles, supports and guides: Set seat angles for grating and supports for floor plates so that they maintain the grating and floor plates flush with the floor.

G. Pipe Sleeves: Provide where pipes pass through concrete or masonry. Holes drilled with a rotary drill may be provided in lieu of sleeves in existing walls. Provide a center flange for water stoppage on sleeves in exterior or water bearing walls.

Provide a rubber caulking sealant or a modular mechanical unit to form a watertight seal in the annular space between pipes and sleeves.

H. U-Channel Concrete Inserts: Provide as indicated for pipe supports and where otherwise specified or shown on Drawings.

I. Fastening to Construction-In-Place: Provide anchorage devices and fasteners where necessary for fastening fabricated items to construction-in-place. Design anchorage devices in accordance with Section 01 73 24. Anchor bolts to be in accordance with Section 05 05 20.

J. Set steel stair baseplates on wedges, or shims. After stairs have been positioned and aligned, tighten anchor bolts. Do not remove wedges or shims, but if protruding, cut off flush with edge of bearing plate before packing with grout.

K. Railing: Adjust railing systems before anchoring to ensure matching alignment at abutting joints. Space posts at spacing required by design loads and as limited on Drawings. Plumb posts in each direction.

3.04 REPAIR/RESTORATION

A. Galvanized:
   1. Maximum area to be repaired shall not be more than 1/2 of 1 percent of the surface area or 36 sq. in. per ton of piece weight, whichever is less. Damage in excess of this requirement shall be repaired by stripping and recoating entire piece.
   2. Clean damaged areas to SSPC-SP5. Repair with zinc-rich paint in accordance with the manufacturer's instructions and with ASTM A780, Annex A2. Minimum thickness requirements shall be in accordance with ASTM A123.
   3. Use zinc-rich repair paint. Acceptable manufacturers:
      a. LPS, Cold Galvanize
      b. ZRC Worldwide, ZRC Galvilite
      c. Or approved equal

B. Painted:
   1. After installation, clean and touch up damaged areas with the same materials used for the shop coat.

3.05 FIELD QUALITY CONTROL

A. Electrolytic Protection:
   1. Protect dissimilar metals from galvanic corrosion by means of pressure tapes, coatings, or isolators. Aluminum in contact with concrete or grout shall be protected with a heavy coat of bituminous paint.

B. Stainless Steel:
   1. During handling and installation, take necessary precautions to prevent carbon impregnation of stainless steel members.

2. After installation, visually inspect stainless steel surfaces for evidence of iron rust, oil, paint, and other forms of contamination.
3. Remove contamination in accordance with requirements of ASTM A380.
4. Brushes used to remove foreign substances shall utilize only stainless steel or nonmetallic bristles.

END OF SECTION

SECTION 06 05 73
WOOD TREATMENT

PART 1 GENERAL

1.01 SUMMARY

A. This Section includes:
   1. Wood Treatment.
   2. Natural Decay and Insect Resistant Wood.

B. Related Sections:
   1. Section 06 10 00 – Rough Carpentry

1.02 SUBMITTALS

A. Product data. No product data is required.

B. Letter of Certification for Pressure Treatment: Submit Certification from treating plant stating chemicals and process used and net amount of preservatives retained are in conformance with specified standards.

PART 2 PRODUCTS

2.01 MATERIALS

A. Preservative Pressure Treatment:
   1. Toxicity/IEQ: Products containing chromium will not be permitted. Products containing arsenic will not be permitted.
   2. Waterborne Wood Preservatives:
      a. Wood products, where indicated, shall be treated with waterborne wood preservatives listed in Section 4 of AWPA Standards U1, excluding those which contain arsenic and/or chromium.
      b. Pressure treatment of wood products, where indicated, shall conform to the requirements of AWPA Standards U1 and T1.
      c. Retention of preservatives as prescribed in AWPA Standard U1 for the following Use Categories (material conforming to a higher AWPA Use Category may be specified): Use UC4A

B. Natural Decay and Insect Resistant Wood:
   1. Resource Management: Provide sustainably harvested; certified or labeled in accordance with FSC, SFI or CSA guidelines. Naturally Durable Wood is the heartwood of the following species with the exception that an occasional piece with corner sapwood is permitted if 90 percent or more of the width of each side on which it occurs is heartwood. Acceptable species include:
      a. Decay resistant. Redwood, South American ipe, bald cypress, cedar, black locust and black walnut.

b. Termite resistant. Redwood and Eastern red cedar.

PART 3 EXECUTION

3.01 SITE ENVIRONMENTAL PROCEDURES

A. As specified in Division 01 and Section 06 10 00 – ROUGH CARPENTRY.

END OF SECTION

SECTION 06 10 00
ROUGH CARPENTRY

PART 1 GENERAL

1.01 SUMMARY

A. Section includes:
   1. Framing with dimension lumber. No engineered wood projects are to be used.
   2. Wood furring, grounds, nailers, and blocking.

1.02 RELATED SECTIONS

A. Section 06 05 73 - Wood Treatment

1.03 SUBMITTALS

A. Product data. No product date is required.

PART 2 PRODUCTS

2.01 MATERIALS

A. Lumber:
   1. Resource Management:
      a. Virgin Lumber: Lumber fabricated from old growth timber is not permitted. Provide sustainably harvested; certified or labeled in accordance with FSC. SFI or CSA guidelines.

2.02 ACCESSORIES

A. Fasteners:
   1. Recycled Content: Fabricated from 100 percent re-melted steel.

PART 3 EXECUTION

3.01 INSTALLATION

A. Install as indicated and in accordance with the National Association of Home Builders (NAHB) Advanced Framing Techniques: Optimum Value Engineering.

3.02 SITE ENVIRONMENTAL PROCEDURES

A. Waste Management: As specified in Section 01 74 19 – CONSTRUCTION WASTE MANAGEMENT AND DISPOSAL and as follows:
   1. Select lumber sizes to minimize waste; reuse scrap lumber to the greatest extent possible. Clearly separate scrap lumber for use on site as accessory components, including: shims, bracing, and blocking.

2. Do not leave any wood, shavings, sawdust, etc. on the ground or buried in fill. Prevent saw dust and wood shavings from entering the storm drainage system.
3. Do not burn scrap lumber that has been pressure treated.
   a. Do not send lumber treated with pentachlorophenol, CCA, or ACA to co-generation facilities or “waste-to-energy” facilities.

END OF SECTION

SECTION 06 74 13
FIBERGLASS REINFORCED GRATINGS

PART 1 GENERAL

1.01 SUMMARY

A. Section includes: Fiberglass-reinforced plastic (FRP) grating, stair treads, hold down attachments and supports.

B. FRP grating and stair treads shall be molded type grating unless noted otherwise.

1.02 REFERENCES

A. The references listed below are a part of this section. Where a referenced document contains references to other standards, those documents are included as references under this section as if referenced directly. In the event of conflict between the requirements of this section and those of the listed documents, the requirements of this section shall prevail.

Reference	Title
ASTM A276	Stainless Steel Bars and Shapes
ASTM D635	Test Method for Rate of Burning and/or Extent and Time of Burning of Plastics in a Horizontal Position
ASTM E84	Test Method for Surface Burning Characteristics of Building Materials
ASTM F593	Stainless Steel Bolts, Hex Cap Screws, and Studs
ISO 9001	Quality Management Systems
CBC	California Building Code

1.03 SUBMITTALS

A. Action Submittals:
   1. Procedures: Section 01 33 00.
   2. A copy of this specification section with each paragraph check-marked to indicate specification compliance or marked to indicate requested deviations from specification requirements.
   3. Check-marks (ü) shall denote full compliance with a paragraph as a whole. Deviations shall be underlined and denoted by a number in the margin to the right of the identified paragraph. The remaining portions of the paragraph not underlined will signify compliance on the part of the Contractor with the specifications. Include a detailed, written justification for each deviation. Failure to include a copy of the marked-up specification sections, along with justification(s) for any requested deviations to the specification requirements, with the submittal shall be sufficient cause for rejection of the entire submittal with no further consideration.
   4. Fabrication and erection drawings and schedules of all materials included under this Section prepared and sealed by a Professional Civil Engineer or Structural

Engineer registered in the state of California. Include plans, elevations, and details, including connection details. Show anchorage and accessory items. Shop Drawings shall indicate location of planned field cut-outs in grating. Sample: Each type of grating.

5. Product data information and catalog cuts showing materials and allowable loads, spans, and deflections; include manufacturer's specifications
6. Design calculations of the grating and grating supports, prepared and sealed by a Professional Civil Engineer or Structural Engineer registered in the state of California.

1.04 QUALITY ASSURANCE

A. Qualifications: Items to be provided under this section shall be furnished only by manufacturers having verifiable experience in the design and manufacture of fiberglass reinforced grating.

B. Certifications:
   1. Manufacturer shall be certified to the ISO 9001 standard.
   2. Manufacturer shall provide proof of certification from at least two other quality assurance programs for its facilities or products (DNV, ABS, USCG, and AARR).

PART 2 PRODUCTS

2.01 MANUFACTURERS

A. Candidate manufacturers are listed below. The manufacturer's standard product may require modification to conform to specified requirements.
   1. American Grating, LLC
   2. Fibergrate Composite Structures Inc.
   3. Seasafe, Inc.
   4. Strongwell Corp.
   5. Or approved equal

2.02 PERFORMANCE/DESIGN CRITERIA

A. Design FRP grating and stair treads in accordance with the following:
   1. Unless otherwise indicated, design live loads for FRP grating shall 100 psf minimum.
   2. Maximum deflection shall be the quotient of the grating span divided by 180 or 1/4 inch, whichever is less.
   3. Stair treads shall be designed for 100 psf uniform load or concentrated load of 300 pounds on area of 4 square inches located in center of tread, whichever produces greater stress.
   4. The minimum thickness of FRP grating shall be 1 1/2 inches.
   5. Grating sheet sizes shall be compatible with the support spans shown on the Drawings and shall require a minimum of field cutting.

6. Corrosion Resistance:
   a. Exterior surfaces of grating shall have a synthetic surfacing veil.
   b. FRP grating shall be suitable for continuous service under the following conditions:

Service	Concentration by Weight (percent)	Maximum Temperature (degrees F)
Sodium Hydroxide	25	100
Sodium Hypochlorite	12.5	100
Ammonium Sulfate	38-40	100
Sulfuric Acid	93	100
Scale Inhibitor (Vitec 4000 or equal)	10-30	100
Citric Acid	50	100
Sodium Bisulfite	38	100
Acetic Acid	56	100

2.03 MATERIALS

A. Molded Type Grating:
   1. Open-molded fiberglass grating made in one piece by interweaving continuous, thoroughly wetted, glass strand with vinyl ester resin with UV inhibitor additives. Polyester resin shall not be used.
   2. Square mesh, 1 1/2 inch maximum spacing for 1 1/2 inch thick grating; 2 inch maximum spacing for 2 inch thick grating.
   3. Stair treads shall be minimum 1 1/2 inch by 6 inch grid, with anti-slip grit top and integral abrasive bull nosing.
   4. Cut ends, holes and abrasions of FRP shapes shall be sealed with resin to prevent moisture wicking.
   5. Load bars in both directions with equal stiffness.
   6. Color shall be selected by City from manufacturer's standard palette.
   7. Meet self-extinguishing requirements of ASTM D635.
   8. Fire Rating: Flame spread of 25 or less as measured by ASTM E84.
   9. Skid-Resistant Surface: Grit adhesively bonded, manufacturer's standard.

B. FRP Embedment Angles: Fiberglass reinforced plastic with slate-gray, vinyl ester, fire-retardant resin. Size FRP embed angle as required for the thickness of grating.

C. Hold Down Clips: ASTM A276 Type 316 stainless steel.

D. Bolts and Connectors: Corrosion resistant FRP or ASTM F593 Type 316 stainless steel. Size and strength to meet IBC requirements.

E. Pedestal Support System:
   1. Provide a pedestal support system suitable for supporting square mesh pattern grating where shown or indicated on the Drawings.

2. Fabricate pedestal support system from vinyl ester resin components for maximum corrosion resistance. System shall consist of bases, tops, and pedestals joining the bases and tops with threaded rods for adjustability.
3. Compression-mold bases and tops. Provide tops with molded-in fittings to fit square mesh grating for maximum rigidity and molded-in internal threads to receive one-inch diameter threaded rods for adjustability. Configure tops to join adjacent grating sections together laterally.
4. Pedestal legs shall be FRP round-tube manufactured using the pultrusion process. Adjustability shall be achieved with vinyl ester all-thread component that threads into pedestal top fitting.
5. Provide lateral bracing between pedestal legs where grating is not laterally anchored to the main structure in each direction. Provide lateral bracing between openings in grating system that exceed six feet in width. Provide intermediate bracing of pedestal legs where required except that intermediate lateral bracing is required for pedestal legs longer than 3.5 feet.
6. Provide Type 316 stainless steel hold-down clips to fasten the grating to the support pedestals.

2.04 ASSEMBLY/FABRICATION

A. Measurements: Grating supplied shall meet the dimensional requirements and tolerances as shown or specified. Provide and/or verify measurements in field for work fabricated to fit field conditions as required by grating manufacturer. When field dimensions are not required, determine correct size and locations of required holes or cutouts from field dimensions before grating fabrication.

B. Layout: Each grating section shall be readily removable (no single piece shall weigh more than 80 pounds), except where indicated on the Drawings. Manufacturer to provide openings and holes where located on the Drawings. Grating openings that fit around protrusions (pipes, cables, machinery, etc.) shall be discontinuous at approximately the centerline of opening so that each section of grating is readily removable.

C. Sealing: Shop fabricated grating cuts shall be coated with vinyl ester resin to provide maximum corrosion resistance. Field fabricated grating cuts shall be coated similarly in accordance with the manufacturer's instructions.

D. Hardware: Hold down clips shall be provided and spaced at maximum of four feet apart with a minimum of four per piece of grating, or as recommended by the manufacturer.

PART 3 EXECUTION

3.01 EXAMINATION

A. Examine and accept existing conditions before beginning work.

3.02 INSTALLATION

A. Provide FRP grating with hold-down attachments, end panel attachments, and appurtenances to make the work complete and operable.

B. Provide adequate quantities of resin sealing kits comprised of pre-measured quantities of thixotropic resin and catalyst, mixing containers, chip brushes, and stirring sticks.

C. Seal field cut holes, edges, and abrasions.

D. Install plumb or level, rigid and neat, as applicable.

E. Install each grating section such that it is easily removable.

F. Install each grating section in accordance with manufacturer's assembly drawings.

G. Follow manufacturer's instructions when cutting or drilling fiberglass products or using resin products; provide adequate ventilation.

H. Clearance (Grating to Vertical Surfaces): 1/4 inch (±1/8-inch tolerance).

I. Pedestal Support System:
   1. Assemble and erect pedestal support system in accordance with manufacturer's erection drawings and instructions. Verify that plumbness, level, and alignment are within manufacturer's tolerances.
   2. Provide Type 316 stainless steel adhesive anchors in accordance with Section 05 05 20, ANCHOR BOLTS, for braced-leg systems. Anchor size and number as recommended by pedestal support manufacturer but shall not be less than two 3/8-inch diameter anchors per base.
   3. Miss-fitting of grating and support system that cannot be corrected by minor field adjustments or that require major changes in member configuration shall be immediately reported to Engineer and manufacturer. Corrective measures shall be approved by manufacturer and Engineer.

END OF SECTION

THIS PAGE INTENTIONALLY LEFT BLANK

SECTION 09 90 00
PROTECTIVE COATING

PART 1 GENERAL

1.01 SUMMARY

A. The WORK of this Section includes the protective coating of all indicated surfaces including surface preparation, pretreatment, coating application, touch-up, protection of surfaces not to be coated, cleanup, and all appurtenant work.

B. Definitions
   1. The term paint, coatings, or finishes as used herein, shall include surface treatments, emulsions, enamels, paints, epoxy resins, and all other protective coatings, except galvanizing or anodizing, whether used as a pretreatment, primer, intermediate coat, or finish coat.
   2. The terms ADFT or DFT shall mean minimum dry film thickness, without any negative tolerance.

C. The following surfaces shall not be protective coated hereunder unless indicated.
   1. Concrete except in chemical(s) containment areas
   2. Stainless steel
   3. Machined surfaces
   4. Grease fittings
   5. Glass
   6. Equipment nameplates
   7. Platform gratings, stair treads and door thresholds.
   8. Aluminum except in contact with concrete.

D. The coating system schedules summarize the surfaces to be coated, the required surface preparation, and the coating systems to be applied. Coating notes on the drawings are used to show exceptions to the schedules, to show or extend the limits of coating systems, or to clarify or show details for application of the coating systems.

1.02 RELATED SECTIONS

A. The WORK of the following Sections applies to the WORK of this Section. Other Sections of the Specifications, not referenced below, shall also apply to the extent required for proper performance of this WORK.

1.03 CODES

A. The WORK of this Section shall comply with the current editions of the following codes as adopted by the City of San Diego Municipal Code:
   1. California Building Code

1.04 SPECIFICATIONS AND STANDARDS

A. Except as otherwise indicated, the current editions of the following apply to the WORK of this Section:

1. References herein to "SSPC Specifications" DI "SSPC" shall mean the published standards of the Steel Structures Painting Council, 40 24th Street, 6th Floor, Pittsburgh, PA 15222.
2. References herein to "NACE" shall mean the published standards of the National Association of Corrosion Engineers, P.O. Box 281340, Houston, TX 77218-8340.
3. Commercial Standards

ASME A13.1	Scheme for Identification of Piping Systems
AWWA C105	Polyethylene Encasement for Ductile Iron Piping
AWWA C203	Coal Tar Protective Coatings and Linings for Steel Water Pipelines - Enamel and Tape - Hot Applied
AWWA C209	Cold Applied Tape Coatings for the Exterior of Special Sections, Connections, and Fittings for Steel Water Pipelines
AWWA D102	Painting Steel Water—Storage Tanks

4. Federal Specifications

TT-P-28	Paint, Aluminum, Heat Resisting (1200'F)
DOD-P-23236	Military Specification, Paint Coating Systems, Steel Ship Tank, Fuel and Saltwater Ballast

1.05 SHOP DRAWINGS AND SAMPLES

A. The following shall be submitted in compliance with Section 01 30 00 unless indicated otherwise.

B. Submittals shall include the following information and be submitted at least 30 days prior to protective coating work.

1. Coating Materials List: The Contractor shall provide a coating materials list which indicates the manufacturer and the coating number, keyed to the coating systems herein, prior to or at the time of submittal of samples.
2. Paint Manufacturer's Catalogue: For each paint system to be used the Contractor shall submit manufacturer's catalogue containing the following data
   a. Paint Manufacturers data sheet for each product used, Including statements on the suitability of the material for the intended use.
   b. Technical and performance information that demonstrates compliance with the system performance and material requirements.
   c. Manufacturer's Instructions and recommendations on surface preparation, thinning, mixing, handling, applying and proper storage.
   d. Colors available for each product (where applicable).
   e. Compatibility of shop and field applied coatings (where applicable).
   f. Material safety data sheet for each product used.

C. Samples
   1. Samples of all paint, finishes, and other coating materials shall be submitted on 8 ½-inch by 11-inch sheet metal. Each sample shall be completely coated over its entire surface with one protective coating material, type, and color.
   2. Two sets of color samples to match each color selected by the Construction Manager from the Manufacturers standard color sheets. If custom mixed colors are indicated, the color samples shall be made using color formulations prepared to match the color samples furnished by the Construction Manager. The color formula shall be shown on the back of each color sample.
   3. Qualifications of Painting Subcontractor
      a. Copy of a valid State of California license as required for the application of coatings.
      b. References which show that the painting subcontractor has demonstrated successful experience with the indicated coating systems in the recent past. Provide the name, address and telephone number of the owner of each installation. The Contractor shall obtain the references from the subcontractor and submit them to the Construction Manager.

1.06 SERVICES OF MANUFACTURER

A. For submerged and severe service coating systems, the Contractor shall require the paint manufacturer to furnish the following services:
   1. The manufacturer's representative shall furnish at least 6 hours of on-site instruction in the proper surface preparation, use, mixing, application and curing of the coating systems.
   2. The manufacturer's representative shall personally observe the start of surface preparation, mixing, and application of the coating materials.
   3. The manufacturer's representative shall provide technical support to resolve field problems associated with manufacturer's products furnished under this Contract or the application thereof.
   4. The manufacturer shall certify that these services have been furnished, and the Contractor shall submit the certification within 7 days of completion of each paint system.

1.07 INSPECTION AND TESTING

A. General: The Contractor shall give the Construction Manager a minimum of 3 days' advance notice of the start of any field surface preparation work or coating application work, and a minimum of 7 days' advance notice of the start of any shop surface preparation work.

B. All such work shall be performed only in the presence of the Construction Manager, unless the Construction Manager has granted prior approval to perform such work in its absence.

C. Inspection by the Construction Manager, or the waiver of inspection of any particular portion of the work, shall not relieve the Contractor of its responsibility to perform the work in accordance with these Specifications.

D. Scaffolding shall be erected and moved to locations where requested by the Construction Manager to facilitate Inspection. Additional illumination shall be furnished to cover all areas to be inspected.

E. Inspection Devices: The Contractor shall furnish, until final acceptance of such coatings, inspection devices in good working condition for the detection of holidays and measurement of dry-film thicknesses of protective coatings. Dry-film thickness gauges shall be made available for the Construction Manager's use at all times while coating is being done, until final acceptance of such coatings. The Contractor shall furnish the services of a trained operator of the holiday detection devices until the final acceptance of such coatings. Holiday detection devices shall be operated only in the presence of the Construction Manager.

F. Holiday Testing: The Contractor shall holiday test all coated ferrous surfaces inside the grit hoppers, or other surfaces which will be submerged in water or other liquids, or surfaces which are enclosed in a vapor space in such structures and surfaces coated with any of the submerged and severe service coating systems. Areas which contain holidays shall be marked and repaired or recoated in accordance with the coating manufacturer's printed instructions and then detested. In addition to the above the Construction Manager may test any surfaces for any number of times at no additional cost to Contractor. All defects so found shall be corrected by the Contractor at no additional cost to the Owner.

1. Coatings with Thickness Exceeding 20 Mils: For surfaces having a total dry film coating thickness exceeding 20 mils: pulse-type holiday detector such as Tinker & Rasor Model AP-W, D.E. Steams Co. Model 14/20, or approved equal shall be used. The unit shall be adjusted to operate at the voltage required to cause a spark jump across an air gap equal to twice the indicated coating thickness.
2. Coatings with Thickness of 20 Mils or Less: For surfaces having a total dry film coating thickness of 20 mils or less: Tinker & Rasor Model MI non— destructive type holiday detector, K—D Bird Dog, or approved equal shall be used. The unit shall operate at less than 75—volts. For thicknesses between 10 and 20 mils, a non-sudsing type wetting agent, such as Kodak Photo Flo, or approved equal, shall be added to the water prior to wetting the detector sponge.

G. Film Thickness Testing: On ferrous metals, the dry film coating thickness shall be measured in accordance with the SSPC "Paint Application Specification No. 2" using a magnetic type dry film thickness gauge such as Mikrotest model FM, Elcometer model 111/1EZ, or approved equal. Each coat shall be tested for the correct thickness. No measurements shall be made until at least 8 hours after application of the coating. On non-ferrous metals and other substrates, the coating thicknesses shall be measured at the time of application using a wet film gauge.

H. Surface Preparation: Evaluation of blast cleaned surface preparation work will be based upon comparison of the blasted surfaces with the standard samples available from the NACE, using NACE standard TM-01-70 and TM-01-75.

1.08 PRODUCT DELIVERY, STORAGE AND HANDLING

A. Coating materials shall be sealed in containers that plainly show the designated name, formula or specification number, batch number, color, date of manufacture, manufacturer's directions, and name of manufacturer, all of which shall be plainly legible at the time of use.

B. Paint materials shall be carefully stored in a manner that will prevent damage and in an area that is protected from deleterious elements.

PART 2 PRODUCTS

2.01 GENERAL

A. Suitability: The Contractor shall use suitable coating materials as recommended by Manufacturer for the intended service.

B. Compatibility: In any coating system only compatible materials from a single manufacturer shall be used in the work. Particular attention shall be directed to compatibility of primers and finish coats. If necessary, a barrier coat shall be applied between existing prime coat and subsequent field coats to ensure compatibility.

C. Colors: All colors and shades of colors of all coats of paint shall be as Indicated or selected by the Construction Manager. Each coat shall be of a slightly different shade, to facilitate Inspection Df surface coverage of each coat. Finish colors shall be custom mixed to match color samples furnished by the Construction Manager.

D. Protective coating materials shall be standard products produced by recognized manufacturers who are regularly engaged in production of such materials for essentially identical service conditions. Where requested, the Contractor shall provide the name of at least one successfully performing application of the proposed manufacturers products in a project of comparable size and complexity constructed in the recent past.

E. Substitute or ”Or Approved Equal” Products

1. To establish equality under Section 01 61 00 COMMON PRODUCT REQUIREMENTS, the Contractor shall provide satisfactory documentation from the firm manufacturing the proposed substitute or "or- approved equal" material that said material meets the requirements and is equivalent or better than the listed materials in the following properties:
   a. Quality
   b. Durability
   c. Resistance to abrasion and physical damage
   d. Life expectancy
   e. Ability to recoat in future
   f. Solids content by volume
   g. Dry film thickness per coat

h. Compatibility with other coatings
i. Suitability for the intended service
j. Resistance to chemical attack
k. Temperature limitations In service and during application
l. Type and quality of recommended undercoats and topcoats
m. Ease of application
n. Ease of repairing damaged areas
o. Stability of colors

F. The cost of all testing and analyzing proposed substitute materials that may be required by the Construction Manager shall be paid by the Contractor at no additional cost to the Owner. If the proposed substitution requires changes in the contract work, the Contractor shall bear all such costs involved and the costs of allied trades affected by the substitution at no additional cost to the Owner.

2.02 INDUSTRIAL COATING SYSTEMS

A. Material Sources: Each of the following manufacturers is capable of supplying many of the industrial coating materials indicated herein. Where manufacturers and paint numbers are listed, it 1s to show the type and quality of coatings that are required. Proposed substitute materials shall be considered as indicated above. All industrial coating materials shall be materials that have a record of satisfactory performance in industrial plants, manufacturing facilities, water, and wastewater treatment plants.
   1. Ameron
   2. Carboline Coatings Company
   3. Inorganic Coatings, Inc.
   4. International (Courtaulds)
   5. Tnemec Company
   6. Or approved equal

B. System 1 - Alkyd Enamel: High quality, gloss or semi-gloss, medium long oil alkyd finish shall have a minimum solids content of 49 percent by volume. Primer shall be as recommended by manufacturer.
   1. Prime coat (DFT = 3 mils) Amercoat 5105, Tnemec 4 55, or approved equal.
   2. Finish coats (two or more, DFT = 3 mils), Amercoat 5401 HSA, or 5405, Tnemec 2H, or approved equal.
   3. Total system DFT = 6 mils.

C. System 2 - (Not Used)

D. System 3 - (Not Used)

E. System 4 - Aliphatic Polyurethane: Two component aliphatic acrylic polyurethane coating material shall provide superior color and gloss retention, resistance to splash from acid and alkaline chemicals, resistance to chemical fumes and severe

weathering and with a minimum solids content of 58 percent by volume. Primer shall be a rust inhibitive two component epoxy coating with a minimum solids content of 68 percent by volume.

1. Prime coat (DFT = 4 mils), Amercoat 385, Carboline 893, Tnemec 69, or approved equal.
2. Finish coat (one or more, DFT = 3 mils), Amershield, Carboline 134 HS, Tnemec 74, or approved equal.
3. Total system DFT = 7 mils.
4. More than one finish coat shall be applied as necessary to produce a finish with uniform color and texture.

F. System 5 - Inorganic Zinc/Polyurethane: The inorganic zinc primer shall be a water or solvent based, self-curing, zinc silicate 2-component inorganic coating which contains at least 85 percent of metallic zinc by weight in the dried film, and as recommended by the coating manufacturer as a primer for this system. The Intermediate coat shall be a high build two component epoxy with a solids content of at least 70 percent by volume. Finish coats shall be a 2-component aliphatic acrylic or polyester polyurethane coating material that provides superior color and gloss retention, resistance to chemical fumes and severe weathering, and a minimum solids content of 58 percent by volume.

1. Prime coat (DFT = 2 mil), Ameron Dimetcote 21—5 or 21—9, Inorganic Coatings 531, or approved equal.
2. Intermediate coat (DFT = 4 mils), Ameron 385, Inorganic Coatings P24, or approved equal.
3. Finish coats (one or more, DFT = 3 mils), Ameron Amershield, Inorganic Coatings 64, or approved equal.
4. Total system DFT = 10 mils.
5. Intermediate coat shall be applied in excess of 4 mils DFT or in more than one coat as necessary to completely cover the inorganic zinc primer and prevent application babbling of the polyurethane finish coat.
6. More than one finish coat shall be applied as necessary to produce a finish with uniform color and texture.
7. If the inorganic zinc primer is used as a pre-construction or shop applied primer, all damaged and uncoated areas shall be spot abrasive blasted and coated after construction using the indicate material.

G. System 6 - Inorganic Zinc, Water Based: Water based, self-curing, ethyl silicate shall be a two component inorganic coating material that contains at least 85 percent of metallic zinc by weight in the dried film,

1. Prime coat and finish coat (One, DFT = 3 mils), Ameron Dimetcote 21-5, Inorganic Coatings 531, or approved equal.
2. Total system DFT = 3 mils.

H. System 7 - Acrylic Latex: Single component, water based acrylic latex with a fungicide additive shall have a minimum solids content of 35 percent by volume. Prime coat shall be as recommended by manufacturer. The coating material shall be available in the ANSI safety colors.

1. Prime coat (DFT = 2 mils), as recommended by manufacturer.
2. Finish coats (2 or more, DFT = 6 mils), Ameron Amercoat 220, Carboline 3359, Tnemec 6, or approved equal.
3. Total system DFT = 8 mils.

I. System 8 - Epoxy Equipment: Two component, rust inhibitive polyamide cured epoxy coating material shall provide a recoatable finish that is available in a wide selection of colors. The coating material shall have a minimum solids content of 66 percent by volume and be resistant to service conditions of condensing moisture, splash and spillage of lubricating oils, and frequent washdown and cleaning

1. Prime coat DFT = 3 mils, Ameron 385, Tnemec 69, or approved equal.
2. Prime coat, where shop applied. (DFT — 3 mils), universal primer, Ameron 185 HS, Tnemec 50-330 or 161, or approved equal.
3. Finish coat (2 or more, DFT =6 mils), Ameron 385, Tnemec 69, or approved equal.
4. Total system DFT = 6 mils.

J. System 9 - (Not Used)

K. System 10 - (Not Used)

L. System 11 - Aliphatic Polyurethane, Concrete: Two component aliphatic polyester polyurethane coating material shall provide superior color and gloss retention, resistance to splash from acid and alkaline chemicals, and resistance to chemical fumes and severe weathering, and with a minimum solids content of 65 percent by volume. Filler- sealed compound shall be a two component epoxy material used to provide a smooth surface for the epoxy intermediate coat. The filler sealer shall be applied to primarily vertical concrete surface and worked into the concrete surface with a wide blade putty knife or squeegee to fill all bug holes and other imperfections to provide a void free substrate. The Intermediate coat shall be a high-build epoxy coating with a minimum solids content of 68 percent by volume.

Wall System:

1. Filler Surfaces (DFT=1/16"), Ameron Nu-Klad 105A followed by Nu—Klad 114, Tnemec 218 Mortar Clad, or approved equal.
2. Intermediate coat (DFT = 4 mils), Ameron Amerlock 400, Tnemec V69 Epoxoline II, or approved equal.
3. Finish coats (2 or more, DFT = 5 mils), Ameron Amershield, Tnemec 297 Enviro—Glaze or approved equal.

Floor System:

1. Prime Coat (DFT = 4 mils) Ameron Amerlock 400, Tnemec V69 Epoxoline II, or approved equal.
2. Finish coats (2 or more, DFT = 5 mils, Ameron Amershield, Tnemec 297 Enviro Glaze or approved equal.

For slip resistance, broadcast 30/50 mesh silica into wet prime coat.

M. System 12 - Aliphatic Polyurethane, Fiber Glass: Two component aliphatic polyurethane coating material shall provide superior color and gloss retention, resistance to splash from acid and alkaline chemicals, and resistance to chemical fumes and severe weathering. A primer, fie coat, or mist coat shall be used as recommended by the manufacturer.
   1. Prime coat (Tie coat), Ameron Amercoat 385, Tnemec 66, or approved equal.
   2. Finish coats (2 or more, DFT = 3 mlls), Ameron Amershield, Tnemec 74, or approved equal.

N. System 13 – (Not Used)

2.03 SUBMERGED AND SEVERE SERVICE COATING SYSTEMS

A. Materials Sources: The manufacturers' products listed in this paragraph are materials which satisfy the material descriptions of this paragraph and have a documented successful record for long term submerged or severe service conditions. Proposed substitute products shall be considered as indicated above.

B. System 100 — Amine Cured Epoxy: High build, amine cured, straight epoxy resin shall have a solids content of at least 80 percent by volume and shall be suitable for long term immersion service in potable water and wastewater. For potable water service, the coating material shall be listed by the NSF International as in compliance with NSF Standard 61B Drinking Water System Components B Health Effects.
   1. Prime coat and finish coats (3 or more, DFT = 16 mils), Amercoat 395, Tnemec 139, or approved equal.
   2. For coating of valves and non-submerged equipment, DFT = 12 mils.

C. System 101 - (Not Used)

D. System 102 - (Not Used)

E. System 103 - (Not Used)

F. System 104 - (Not Used)

G. System 105 - (Not Used)

H. System 106 - (Not Used)

I. System 107 - (Not Used)

J. System 108 - (Not Used)

K. System 109 - (Not Used)

L. System 110 - (Not Used)

M. System 111 - (Not Used)

N. System 112 - Vinyl Ester, Concrete: Vinyl ester resin coating material with an inert flake pigment suitable for immersion service in 30 percent hydrochloric acid and 30 percent sulfuric acid solutions. The filler-sealer shal1 be a 100 percent solids amine-cured epoxy or vinyl ester material with silica and Inert fillers. The filler-sealer is applied to the entire concrete surface. A 100 percent solids epoxy or vinyl ester surfacer shall be used to fill holes and patch the concrete surface after abrasive blasting.
   1. Prime coat (filler-sealer), applied in two coats using a squeegee to achieve a smooth void-free surface, Plasite 9028 MI, or approved equal.
   2. Finish coats (two or more, DFT = 40 mils), Plasite 4100, or approved equal.

2.04 SPECIAL COATING SYSTEMS

A. System 200 – (Not Used)

B. System 201 - Rich Portland Cement Mortar: Rich Portland cement mortar coating shall have a minimum thickness of 1/8 inch, followed by enclosure in an 8 mil thick polyethylene sheet with all joints and edges lapped and sealed with tape.

C. System 202 – (Not Used)

D. System 203 - Epoxy Surfacing: Two-component epoxy floor surfacing shall be formulated to resist many acids, alkalis, and solvents. Material shall be resistant to liquid alum, sodium hydroxide, and 50 percent sulfuric acid. Products shall be as follows, or approved equal:
   1. Prime coat Nu-Klad 105; finish coat Nu-Klad 110 (1/4-inch thick), or approved equal.

E. System 204 - (Not Used)

F. System 205 - (Not Used)

G. System 206 - (Not Used)

H. System 207 - (Not Used)

I. System 208 - Aluminum Metal Isolation: Two coats of a high build polyamide epoxy painting, such as Tnemec 66, or approved equal (8 mils). Total thickness of system DFT — 8.0 mils.

J. System 209 - (Not Used)

K. System 210 - (Not Used)

L. System 211 - (Not Used)

M. System 212 - (Not Used)

N. System 213 – (Not Used)

PART 3 EXECUTION

3.01 WORKMANSHIP

A. Skilled craftsmen and experienced supervision shall be used on all WORK.

B. Coating shall be done in a workmanlike manner so as to produce an even film of uniform thickness. Edges, corners, crevices, and joints shall receive special attention to insure thorough cleaning and an adequate thickness of coating material. The finished surfaces shall be free from runs, drops, ridges, waves, laps, brush marks, and variations in color, texture, and finish. The hiding shall be so complete that the addition of another coat would not increase the hiding. Special attention shall be given to ensure that edges, corners, crevices, welds, and similar areas receive a film thickness equivalent to adjacent areas, and installations shall be protected by the use of drop cloths or other precautionary measures.

C. All damage to surface resulting from the WORK shall be cleaned, repaired, and refinished to original condition.

3.02 STORAGE, MIXING, AND THINNING OF MATERIALS

A. Manufacturer's Recommendations: Unless otherwise indicated, the coating manufacturer's printed recommendations and instructions for thinning, mixing, handling, applying, and protecting its coating materials, for preparation of surfaces for coating, and for all other procedures relative to coating shall be strictly observed.

B. All protective coating materials shall be used within the manufacturer's recommended shelf 1ife.

C. Storage and Mixing: Coating materials shall be stored under the conditions recommended by the Material Safety Data Sheets, and shall be thoroughly stirred, strained, and kept at a uniform consistency during application. Coatings of different manufacturers shall not be mixed together.

3.03 PREPARATION FOR COATING

A. General: All surfaces to receive protective coatings shall be cleaned as indicated prior to application of coatings. The Contractor shall examine all surfaces to be coated and shall correct all surface defects before application of any coating material. All marred or abraded spots on shop primed and on factory-finished surfaces shall receive touch up restoration prior to any coating application. Surfaces to be coated shall be dry and free of visible dust.

B. Protection of Surfaces Not to be Coated: Surfaces which are not to receive protective coatings shall be protected during surface preparation, cleaning, and coating operations.

C. All hardware, lighting fixtures, switch plates, machined surfaces, couplings, shafts, bearings, nameplates on machinery, and other surfaces not to be painted shall be

removed, masked or otherwise protected. Drop clothe shall be provided to prevent coating materials from falling on or marring adjacent surfaces. The working parts of all mechanical and electrical equipment shall be protected from damage during surface preparation and coating operations. Openings in motors shall be masked to prevent entry of coating or other materials.

D. Care shall be exercised not to damage adjacent work during blast cleaning operations. Spray painting shall be conducted under carefully controlled conditions. The Contractor shall be fully responsible for and shall promptly repair any and all damage to adjacent work or adjoining property occurring from blast cleaning or coating operations.

E. Protection of Painted Surfaces: Cleaning and coating shall be scheduled so that dust and other contaminants from the cleaning process will not fall on wet, newly-coated surfaces.

3.04 SURFACE PREPARATION STANDARDS

A. The following referenced surface preparation specifications of the Steel Structures Painting Council shall form a part of this specification:
   1. Solvent Cleaning (SSPC—SPI): Removal of oil, grease, soil, salts, and other soluble contaminants by cleaning with solvent, vapor, alkali, emulsion, or steam.
   2. Hand Tool Cleaning (SSPC-SP2): Removal of loose rust, loose mill scale, loose paint, and other loose detrimental foreign matter, by hand chipping, scraping, sanding, and wire brushing.
   3. Power Tool Cleaning (SSPC SP3): Removal of loose rust, loose mill scale, loose paint, and other loose detrimental foreign matter, by power tool chipping, descaling, sanding, wire brushing, and grinding.
   4. White Metal Blast Cleaning (SSPC-SPS): Removal of all visible rust, oil, grease, soil, dust, mill scale, paint, oxides, corrosion products and foreign matter by blast cleaning.
   5. Commercial Blast Cleaning (SSPC-SP6): Removal of all visible oil, grease, soil, dust, mill scale, rust, paint, oxides, corrosion products, and other foreign matter, except that staining shall be limited to no more than 33 percent of each square inch of surface area.
   6. Brush-Off Blast Cleaning (SSPC-SP7): Removal of all visible oil, grease, soil, dust, loose mill scale, loose rust, and loose paint. Tightly adherent mill scale, rust and paint which cannot be removed by a dull putty knife may remain.
   7. Near—White Blast Cleaning (SSPC—SPl0): Removal of all visible oil, grease, soil, dust, mill scale, rust, paint, oxides, corrosion products, and other foreign matter, except that staining shall be limited to no more than 5 percent of each square inch of surface area.

3.05 METAL SURFACE PREPARATION (UNGALVANIZED)

A. The minimum abrasive blasting surface preparation shall be as specified in the coating system schedules included at the end of this Section. Where there in a

conflict between these specifications and the coating manufacturer's printed recommendations for the intended service, the more stringent degree of cleaning shall apply.

B. Workmanship for metal surface preparation shall be in conformance with the current SSPC Standards and this Section. Blast cleaned surfaces shall match the standard samples available from the National Association of Corrosion Engineers, NACE Standard TM-01—70 — Visual Standard for Surfaces of New Steel Air Blast Cleaned with Sand Abrasive and TM-01—75 - Visual Standard for Surfaces of New Steel Centrifugally Blast Cleaned with Steel Grits.

C. Oil, grease, welding fluxes and other surface contaminants shall be removed by solvent cleaning per SSPC—SPI prior to blast cleaning.

D. All sharp edges shall be rounded or chamfered and all burrs, and surface defects and weld splatter shall be ground smooth prior to blast cleaning.

E. The type and size of abrasive shall be selected to produce a surface profile that meets the manufacturer's recommendation for the specific coating and service conditions. Abrasive shall not be used unless approved by the Construction Manager.
   1. Submerged and Severe Service
      a. Automated blasting systems shall not be used for surfaces that will be in submerged service but are acceptable for severe service.
      b. Abrasives for submerged and severe service coatings shall be clean, hard, sharp cutting crushed: no metallic abrasives shall be used.
   2. Other Services
      a. Either automated or manual methods of blasting may be used.
      b. Abrasives shall be clean, oil-free metallic abrasives, composed of at least 50 percent grit.

F. The Contractor shall comply with the applicable federal, state, and local air pollution control regulations for blast cleaning.

G. Compressed air for air blast cleaning shall be supplied at adequate pressure from well-maintained compressors equipped with oil/moisture separators which remove at least 95 percent of the contaminants.

H. Surfaces shall be cleaned of all dust and residual particles of the cleaning operation by dry air blast cleaning, vacuuming or another approved method prior to painting.

I. Enclosed areas and other areas where dust setting 1s a problem shall be vacuum cleaned and wiped with a tack cloth.

J. Damaged or defective coating shall be removed by the specified blast cleaning to meet the clean surface requirements before recoating.

K. If the specified abrasive blast cleaning will damage adjacent work, the area to be cleaned is less than 100 square feet, and the coated surface will not be submerged in service, then SSPC-SP2, or SSPC-SP3 may be used

L. Shop applied coatings of unknown composition shall be completely removed before the specified coatings are applied. Valves, castings, ductile or cast iron pipe, and fabricated pipe or equipment shall be examined for the presence of shop—applied temporary coatings. Temporary coatings shall be completely removed by solvent cleaning per SSPC-SPI before the abrasive blast cleaning work has been started.

M. Shop primed equipment shall be solvent cleaned in the field before finish coats are applied.

3.06 SURFACE PREPARATION FOR GALVANIZED FERROUS METAL

A. Galvanized ferrous metal shall be alkaline cleaned per SSPC-SPI to remove oil, grease, and other contaminants detrimental to adhesion of the protective coating system to be used, followed by brush-off blast cleaning per SSPC-SP7.

B. Pretreatment coatings of surfaces shall be in accordance with the printed recommendations of the coating manufacturer.

3.07 SURFACE PREPARATION OF FERROUS SURFACES WITH EXISTING COATINGS, EXCLUDING STEEL RESERVOIR INTERIORS

A. General: All grease, oil, heavy chalk, dirt, or other contaminants shall be removed by solvent or detergent cleaning prior to abrasive blast cleaning, The generic type of the existing coatings shall be determined by laboratory testing.

B. Abrasive Blast Cleaning: The Contractor shall provide the degree of cleaning specified in the coating system schedule for the entire surface to be coated. If the degree of cleaning is not specified in the schedule, deteriorated coatings shall be removed by abrasive blast cleaning to SSPC-SP6, Commercial Blast Cleaning. Areas of tightly adhering coatings shall be cleaned to SSPC-SP7, Brush—off Blast Cleaning, with the remaining thickness of existing coating not to exceed 3 mils.

C. Incompatible Coatings: If coatings to be applied are not compatible with existing coatings the Contractor shall apply intermediate coatings per the paint manufacturer's recommendation for the specified coating system or shall completely remove the existing coating prior to abrasive blast cleaning. A small trial application shall be conducted for compatibility prior to painting large areas.

D. Unknown Coatings: Coatings of unknown composition shall be completely removed prior to application of new coatings.

E. Water Abrasive or Wet Abrasive Blast Cleaning: Where indicated or where job site conditions do not permit dry abrasive blasting for industrial coating systems due to dust or air pollution considerations, water abrasive blasting or wet abrasive blasting may be used. In both methods, paint-compatible corrosion inhibitors shall be used,

and coating application shall begin as soon as the surfaces are dry. Water abrasive blasting shall be done using high pressure water with sand injection. In both methods, the equipment used shall be commercially produced equipment with a successful service record. Wet blasting methods shall not be used for submerged and severe service coating systems unless indicated.

3.08 CONCRETE AND CONCRETE BLOCK MASONRY SURFACE PREPARATION

A. Surface preparation shall not begin until at least 30 days after the concrete or masonry has been placed.

B. All oil, grease, and form release and curing compounds shall be removed by detergent cleaning per SSPC-SPI before abrasive blast cleaning.

C. Concrete, concrete block masonry surfaces and deteriorated concrete surfaces to be coated shall be abrasive blast cleaned to remove existing coatings, laitance, deteriorated concrete, and to toughen the surface equivalent to the surface of the No. 80 grit flint sandpaper.

D. If acid etching is required by the coating application instructions, the treatment shall be made after abrasive blasting. After etching, rinse surfaces with water and test the pH. The pH shall be between neutral and 8.

E. Surfaces shall be clean and as recommended by the coating manufacturer before coating is started.

F. Unless required for proper adhesion, surfaces shall be dry prior to coating. The presence of moisture shall be determined with a moisture detection device such as Delmhorst Model DB, or approved equal.

3.09 PLASTIC, FIBER GLASS, AND NONFERROUS METALS SURFACE PREPARATION

A. Plastic and fiber glass surfaces shall be sanded or brush off blast cleaned prior to solvent cleaning with a chemical compatible with the coating system primer.

B. Non-ferrous metal surfaces shall be solvent cleaned SSPC-SP 1 followed by sanding or brush off blast cleaning SSPC-SP7.

C. All surfaces shall be clean and dry prior to coating application.

3.10 ARCHITECTURAL CONCRETE BLOCK MASONRY SURFACE PREPARATION

A. The mortar surfaces shall be cured at least 14 days before surface preparation work is started.

B. Dust, dirt, grease, and other foreign matter shall be removed prior to abrasive blasting.

C. The majority surfaces shall be prepared in accordance with the material manufacturer's printed instructions.

3.11 SHOP COATING REQUIREMENTS

A. Unless indicated otherwise, items of equipment, or parts of equipment which are not submerged in service, shall be shop primed and then finish coated in the field after installation with the indicated or approved color. The methods, materials, application equipment and all other details of shop painting shall comply with this Section. If the shop primer requires top-coating within a specified period of time, the equipment shall be finish coated in the shop and then touch-up painted after installation.

B. All items of equipment, or parts and surfaces of equipment which are submerged or inside an enclosed hydraulic structure when in service, with the exception of pumps and valves, shall have all surface preparation and coating work performed in the field.

C. For certain pieces of equipment, it may be undesirable or impractical to apply finish coatings in the field. Such equipment may include engine generator sets, equipment such as electrical control panels, switchgear or main control boards, submerged parts of pumps, ferrous metal passages in valves, or other items where it is not possible to obtain the specified quality in the field. Such equipment shall be primed, and finish coated in the shop and touched up in the field with the identical material after installation. The Contractor shall require the manufacturer of each such piece of equipment to certify as part of its shop drawings that the surface preparation is in accordance with these specifications. Submit the coating material data sheet with the shop drawings for the equipment.

D. For certain small pieces of equipment, the manufacturer may have a standard coating system which is suitable for the intended service conditions. In such cases, the final determination of suitability will be made during review of the shop drawing submittals. Equipment of this type generally includes only indoor equipment such as Instruments, small compressors, and chemical metering pumps.

E. Shop painted surfaces shall be protected during shipment and handling by suitable provisions Including padding, blocking, and the use of canvas or nylon slings. Primed surfaces shall not be exposed to the weather for more than 2 months before top—coated, or less time if recommended by the coating manufacturer.

F. Damage to shop-applied coatings shall be repaired in accordance with this Section and the coating manufacturer's printed Instructions.

G. The Contractor shall make certain that the shop primers and field topcoats are compatible and meet the requirements of this Section. Copies of applicable coating manufacturer's data sheets shall be submitted with equipment shop drawings.

3.12 APPLICATION OF COATINGS

A. The application of protective coatings to steel substrates shall be in accordance with "Paint Application Specification No. 1, (SSPC-PA1)," Steel Structures Painting Council.

B. Cleaned surfaces and all coats *hall be Inspected prior to each succeeding coat. The Contractor shall schedule such Inspection with the Construction Manager in advance.

C. Blast cleaned ferrous metal surfaces shall be painted before any rusting or other deterioration of the surface occurs. Blast cleaning shall be limited to only those surfaces that can be coated in the same working day.

D. Coatings shall be applied in accordance with the manufacturer's instructions and recommendations, and this Section, whichever has the most stringent requirements.

E. Special attention shall be given to edges, angles, weld seams, flanges, nuts and bolts, and other places where insufficient film thicknesses are likely to be present. Use stripe painting for these areas.

F. Special attention shall be given to materials which will be joined so closely that proper surface preparation and application are not possible. Such contact surfaces shall be coated prior to assembly or installation.

G. Finish coats, including touch-up and damage repair coats shall be applied in a manner which will present a uniform texture and color matched appearance.

H. Coatings shall not be applied under the following conditions:
   1. Temperature exceeding the manufacturer's recommended maximum and minimum allowable.
   2. Dust or smoke laden atmosphere.
   3. Damp or humid weather.
   4. When the substrate or air temperature is less than 5 degrees F above the dewpoint.
   5. When air temperature is expected to drop below 40 degrees F or less than 5 degrees F above the dewpoint within 8 hours after application of coating.
   6. When wind conditions are not calm.

I. Dewpoint shall be determined by use of a sling psychrometer in conjunction with U.S. Dept. of Commerce, Weather Bureau psychometric tables.

J. Steel piping shall be abrasive blast cleaned and primed before installation.

K. The finish coat on all work shall be applied after all concrete, masonry, and equipment installation is complete and the work areas are clean and dust free.

3.13 CURING OF COATINGS

A. The Contractor shall maintain curing conditions in accordance with the conditions recommended by the coating material manufacturer or by this Section, whichever is the more stringent, prior to placing the completed coating system into service.

B. In the case of enclosed areas, forced air ventilation, using heated air, if necessary, may be required until the coatings have fully cured.

3.14 (NOT USED)

3.15 IDENTIFICATION OF PIPING

A. Identification of piping shall be in accordance with Section 40 05 45 – Piping system Identification.

B. Every valve or connection, where it may be possible for a worker to be exposed to a hazardous substance, shall be labeled per General Industry Safety Orders, Article 112 and 5194.

C. All unburied pipe in structures and in chemical pipe trenches shall be color code painted.

D. Colors shall be as selected by the Construction Manager, or as indicated.

3.16 COATING SYSTEM SCHEDULES - FERROUS METALS

A. Coating System Schedule, Ferrous Metal - Not Galvanized:

	Item	Surface Preparation	System No.
FM 1	All surfaces indoors and outdoors, exposed or covered, except those included below.	Near white metal blast cleaning SSPC SP10	(5) Inorganic zinc/ polyurethane
FM-2	Not Used		
FM-3	Surfaces of equipment and ferrous surfaces submerged or intermittently submerged in water, including all surfaces lower than 2 feet above high water level and all surfaces inside enclosed hydraulic structures and vents (excluding shop-coated valves, couplings, pumps).	White metal blast cleaning SSPC SP5	(100) Amine-cured epoxy
FM-4	Surfaces exposed to high temperature (between 150 and 600 degrees F).	Near white metal blast cleaning SSPC- SP10	(6) Inorganic zinc, water based
FM 5	Not Used		
FM 6	Not Used		
FM 7	Not Used		
FM 8	Not Used		
FM-9	Not Used		

	Item	Surface Preparation	System No.
FM-10	All ferrous surfaces of slide gates.	White metal blast cleaning SSPC-SP5	(100) Amine-cured epoxy
FM 11	Buried surfaces that are not indicated to be coated elsewhere	White metal blast cleaning SSPC-SP5	(100) Amine-cured epoxy
FM-12	Not Used		
FM-13	Not Used		
FM-14	Structural steel, miscellaneous metalwork, and supports for prefabricated buildings (unless galvanized)	Commercial blast cleaning SSPC-SP5	(5) Inorganic zinc/ polyurethane
FM-15	Not Used.		
FM 16	Surfaces of indoor equipment, not submerged.	Commercial blast cleaning SSPC-SP5	(8) Epoxy, equipment
FM 17	Not Used		
FM 18	Buried pipe couplings, valves, fittings, and flanged joints (where piping is plastic).	Removal of dirt, grease, oil	(201) Rich Portland cement mortar
FM-19	Not Used		
FM-20	Not Used		

B. Coating System Schedule, Ferrous Metal - Galvanized: Pretreatment coatings, barrier coatings, or washes shall be applied as recommended by the coating manufacturer. All galvanized surfaces except for the following items shall be coated unless coating is required by other Sections: (1) Floor gratings and frames, (2) Handrails, (3) Stair treads.

	Item	Surface Preparation	System No.
FMG-1	All exposed surfaces indoors and outdoors, except those included below.	Solvent cleaning SSPC—SP1	(4) Aliphatic polyurethane
FMG-2	Not Used		
FMG 3	Not Used		
FMG-4	Buried miscellaneous surfaces, couplings, valves, and flanged joints.	Removal of dirt grease, oil	(201) Rich Portland cement
FMG-5	Indoor sheet metal flashings, exposed ducts.	Solvent cleaning SSPC SP1	(1) Alkyd enamel
FMG-6	Surfaces buried or submerged in water or wastewater, including all surfaces lower than two feet above high water level and all	Solvent cleaning SSPC-SP1 followed by brush-off grade blast cleaning SSPC SP7	(100) Amine-cured epoxy

	Item	Surface Preparation	System No.
	surfaces inside enclosed hydraulic structures and vents.		
FMG-7	Not Used		

3.17 COATING SYSTEM SCHEDULE, NON-FERROUS METAL, PLASTIC, AND FIBERGLASS

A. Where Isolated non-ferrous parts are associated with equipment or piping, the Contractor shall use the coating system for the adjacent connected surfaces. Do not coat handrails, gratings, frames or hatches. Only primers recommended by the coating manufacturer shall be used.

	Item	Surface Preparation	System No.
NFM 1	All exposed surfaces, indoors and outdoors, except those included below.	Solvent cleaned SSPC SP1	(4) Aliphatic polyurethane
NFM—2	Not Used		
NFM-3	Aluminum surfaces in contact with concrete, or with any other metal except galvanized ferrous metal.	Solvent cleaned SSPC-SP1	(208) Aluminum metal isolation
NFM 4	Polyvinyl chloride plastic (PVC) piping, indoors and outdoors, or in structures, not submerged.	Solvent cleaned SSPC SP1	(7) Acrylic latex
NFM-5	Fiberglass surfaces.	Per Paragraph 3.8	(12) Aliphatic polyurethane-fiberglass
NFM-6	Not Used		
NFM-7	Not Used		

3.18 COATING SYSTEM SCHEDULE - CONCRETE

	Item	Surface Preparation	System No.
C1	All surfaces indoors and outdoors, where indicated on Drawings	Per Paragraph 3.8	(11) Aliphatic polyurethane, concrete
C-2	Warning stripes at stair tread nosings: 2 inch wide contrasting color stripe, located within 1 inch of each nosing	Per paragraph 3.8	(11) Aliphatic polyurethane, concrete contrasting color

	Item	Surface Preparation	System No.
C-3	Floor slab, interior of containment walls, tank and pump pads within containment, and chemical fill area exposed to chemicals, irrespective of whether shown on the Drawings or not.	Per Paragraph 3.8	(203) Epoxy surfacing
C-4	Wall, floors, exposure to chemical splash, washdown, as indicated.	Per Paragraph 3.8	(11) Aliphatic polyurethane concrete
C-5	Interior surfaces of catch basins and sewer, manholes including bottom, and metal appurtenances, for manholes indicated.	Per Paragraph 3.8	(112) Vinyl ester, concrete
C-6	Not Used		
C-7	Not Used		

END OF SECTION

THIS PAGE INTENTIONALLY LEFT BLANK

SECTION 10 14 00
SIGNAGE

PART 1 GENERAL

1.01 DESCRIPTION

A. This section specifies informational and accident prevention signs.

1.02 OPERATING AND DESIGN REQUIREMENTS

A. General:
1. Accident prevention signs shall conform as to design with OSHA Section 1910.145 of Subpart J, Part 1910, Chapter XVII, Title 29 of the Code of Federal Regulations. Exit signs shall conform with Section 1910.37(g) of the OSHA Safety and Health Standard for General Industry, Article 10, Section 10.113 of the Uniform Fire Code, and where applicable with local fire regulations.
2. In addition to the signs identified on the schedule in Part 3 of this section, the following shall be provided:
   a. Exit signs shall be provided in accordance with Lighting Fixture Schedule on the Electrical Drawings.
   b. "Caution Automatic Equipment May Start at Any Time" signs shall be provided in accordance with Section 43 05 11, Paragraph 2.07.

B. Design Requirements:
1. Type:
   a. The sign type shall be as follows:

Type	Message
A	NO SMOKING
B	FIRE EXTINGUISHER
C	CAUTION - AUTHORIZED PERSONNEL ONLY
D	NOTICE – MAXIMUM FLOOR LOAD 200 PSF LIVE LOAD
E	THINK – SAFETY FIRST
F	“ROOM OR FACILITY NAMES”
G	WARNING - EAR PROTECTION REQUIRED IN THIS AREA
H	ACCESSIBLE AREA
I	FIRST AID
J	As directed by the City

PART 2 PRODUCTS

2.01 GENERAL

A. Sign lettering shall be single stroke and shall contrast in color with the background. For those messages for which there are international symbols, the international

symbols shall be used. Chain mounted signs shall have lettering on both sides.

2.02 MATERIALS

A. Signs shall be 0.100-inch thick fiberglass with embedded fadeproof legends.

PART 3 EXECUTION

3.01 GENERAL

A. Signs shall be distributed as follows:

Location	Number	Size, inch x inch	Message	Mount
Electrical Equipment Enclosure	1	8 x 6	F	Outside of Enclosure
Electrical Equipment Enclosure – Electrical Room	1	8 x 6	F	Outside of Enclosure, near Electrical Room Door
Electrical Equipment Enclosure – Control Room	1	8 x 6	F	Outside of Enclosure, near Control Room Door
Area 1: Primary Influent Pump System	1	8 x 6	F	Near PI System – Post Mounted
Area 2: Primary Effluent Pump System	1	8 x 6	F	Near PE System – Post Mounted
Area 3: Blend Tank and BNR Feed System	1	8 x 6	F	In Area 3 – Post Mounted
Area 4: BNR System	1	8 x 6	F	In Area 4 – Post Mounted or on BNR Tank
Area 5: MBR System	1	8 x 6	F	In Area 5 – Post Mounted or on MBR Tank
Area 7: Purified Water Facility	1	8 x 6	F	In Area 7 – Post Mounted
Area 8: Chemical Facility	1	8 x 6	F	In Area 8 – Post Mounted
General	150	14 x 10	As directed, J	As directed by City – mostly Post Mounted

END OF SECTION

SECTION 13 34 19
CANOPY SYSTEMS

PART 1 GENERAL

1.01 SUMMARY

A. Section includes design, supply, and installation of four non-combustible fabric type canopies as listed below. All canopies are in Area 7/8. See drawings for exact dimensions:
   1. Area 7 – Canopy 1: approximately 25’-0” long x 20’-0” wide with a 12’-0” eave height (minimum height at the lowest point).
   2. Area 7 – Canopy 2: approximately 34’-0” long x 30’-0” wide with a 12’-0” eave height (minimum height at the lowest point).
   3. Area 7 – Canopy 3: approximately 15’-2” long x 15’-2” wide with a 12’-0” eave height (minimum height at the lowest point).
   4. Area 8 – Canopy 4: approximately 34’--0” long x 18’-0” wide with a 12’-0” eave height (minimum height at the lowest point).
   5. See Drawings for proposed extents of the canopies.

B. The canopy supplier’s (Supplier) scope of work shall include, but not limited to, coordination with Contractor on the location and size of canopies, the structural design, supply, fabrication, and installation of the following items:
   1. The architectural membrane per this specification.
   2. Cables and end fittings.
   3. Perimeter, catenary, and sectionalized aluminum clamping system.
   4. Structural steel, including masts, trusses, struts, beams, and / or weldments.
   5. Fasteners and gasketing.

C. The architectural membrane used in these structures shall be polytetrafluoroethylene (“PTFE”, such as Teflon® coated woven fiberglass). All references to “membrane” in this section, without exception, and whether singular, plural, capitalized or not, are to such architectural membrane.

D. The canopies shall be installed on a structural reinforced concrete slab at least 2’-0” thick placed essentially at ground level. The canopy manufacturer shall coordinate any additional requirements of localized footing with the Contractor.

E. All canopy structures shall be supported on four columns at four corners of the canopy without any braces on all four sides. Exact locations shall be coordinated with the equipment installed on the concrete pad.

F. Submit stamped and signed drawings and calculations as required for Building Permit application.

1.02 RELATED SECTIONS

A. This section contains specific references to the following related sections. Additional related sections may apply that are not specifically listed below.
   1. Section 01 61 00 COMMON PRODUCT REQUIREMENTS
   2. Section 01 88 15 ANCHORAGE AND BRACING
   3. Section 03 30 00 CAST-IN-PLACE CONCRETE
   4. Section 05 05 14 HOT-DIP GALVANIZING
   5. Section 05 05 20 ANCHOR BOLTS
   6. Section 05 50 00 METAL FABRICATIONS
   7. Section 09 90 00 PROTECTIVE COATING

1.03 REFERENCES

A. The references listed below are a part of this section. Where a referenced document contains references to other standards, those documents are included as references under this section as if referenced directly. In the event of conflict between the requirements of this section and those of the listed documents, the requirements of this section shall prevail.

Reference	Title
AIS	International Accreditation Services
AISC 303	Code of Standard Practice for Steel Buildings and Bridges
AISC 341	Seismic Provisions for Structural Steel Buildings
AISC 360	Specification for Structural Steel Buildings
AISC Steel Construction Manual	American Institute of Steel Construction, Manual of Steel Construction
AISC Design Guide 3	Serviceability Design Considerations for Steel Buildings
AISI S100	Design of Cold-Formed Steel Structural Members
ACI 318	Building Code Requirements for Structural Concrete
AWS D1.1	Structural Welding Code – Steel
AWS D1.3	Structural Welding Code – Sheet Steel
AISE 13	Design and Construction of Mill Buildings
ASCE 7	Minimum Design Loads for Buildings and Other Structures
ASCE 19	Structural Applications of Steel Cables for Buildings
ASTM A36	Carbon Structural Steel
ASTM A48	Gray-Iron Castings
ASTM A108	Steel Bar, Carbon, and Alloy, Cold-Finished
ASTM A123	Zinc (Hot Dip Galvanized) Coatings on Iron and Steel Products
ASTM A307	Carbon Steel Bolts, Studs, and Threaded Rod 60000 psi Tensile Strength
ASTM A325	Structural Bolts, Steel, Heat Treated 120/105 ksi Minimum Tensile Strength
ASTM A475	Zinc-Coated Steel Wire Strand

Reference	Title
ASTM A490	Structural Bolts, Alloy Steel, Heat Treated, 150 ksi Minimum Tensile Strength
ASTM A500	Cold-Formed Welded and Seamless Carbon Steel Structural Tubing in Rounds and Shapes
ASTM A529	High-Strength Carbon-Manganese Steel of Structural Quality
ASTM A563	Carbon and Alloy Steel Nuts
ASTM A572	High-Strength Low-Alloy Columbium-Vanadium Structural Steel
ASTM A653	Steel Sheet, Zinc Coated (Galvanized) or Zinc Iron Alloy Coated (Galvannealed) by the Hot Dip Process
ASTM A792	Standard Specification for Steel Sheet, 55 % Aluminum-Zinc Alloy-Coated by the Hot-Dip Process
ASTM A992	Structural Steel Shapes
ASTM A1011	Steel, Sheet, and Strip, Hot-Rolled, Carbon, Structural, High-Strength Low-Alloy, High-Strength Low-Alloy with Improved Formability, and Ultra-High Strength
ASTM A1039	Steel, Sheet, Hot Rolled, Carbon, Commercial, Structural, and High-Strength Low-Alloy, Produced by Twin-Roll Casting Process
ASTM B209	Aluminum and Aluminum-Alloy Sheet and Plate
ASTM C553	Mineral Fiber Blanket Thermal Insulation for Commercial and Industrial Applications
ASTM D1117	Testing of Non-Woven Fabrics
ASTM D2244	Calculation of Color Tolerances and Color Differences from Instrumentally Measured Color Coordinates
ASTM D4214	Test Methods for Evaluating the Degree of Chalking of Exterior Paint Films
ASTM E96	Test Methods for Water Vapor Transmission of Materials
ASTM E108	Spread-of Flame Testing: Class 1A Rating
ASTM E283	Test Method for Determining the Rate of Air Leakage Through Exterior Windows, Curtain Walls, and Doors Under Specified Pressure Differences Across the Specimen
ASTM E331	Test Method for Water Penetration of Exterior Windows, Skylights, Doors, and Curtain Walls by Uniform Static Air Pressure Difference
ASTM E1592	Test Method for Structural Performance of Sheet Metal Roof and Siding Systems by Uniform Static Air Pressure Difference
ASTM E1646	Test Method for Water Penetration of Exterior Metal Roof Panel Systems by Uniform Static Air Pressure Difference
ASTM E1680	Test Method for Rate of Air Leakage Through Exterior Metal Roof Panel Systems
ASTM E2140	Test Method for Water Penetration of Metal Roof Panel Systems by Static Water Pressure Head
ASTM F436	Hardened Steel Washers
ASTM F468	Nonferrous Bolts, Hex Cap Screws, Socket Head Cap Screws and Studs for General Use

Reference	Title
ASTM F1145	Turnbuckles, Swaged, Welded, Forged
ASTM F1554	Anchor Bolts, Steel, 36, 55, and 105-ksi Yield Strength
AWS D1.1	Structural Welding Code
IAS AC472	Accreditation Criteria for Inspection Programs for Manufacturers of Metal Building Systems
CBC	California Building Code
MBMA	Metal Building Manufacturer's Association
NFPA 701	Standard Methods of Fire Tests for Flame Propagation of Textiles and Films
Cal/OSHA	The Division of Occupational Safety and Health of California

1.04 SUBMITTALS

A. Action Submittals

1. Procedures: Section 01 33 00 SUBMITTAL PROCEDURES.
2. A copy of this specification section with each paragraph check-marked to indicate specification compliance or marked to indicate requested deviations from specification requirements.
3. Checkmarks (ü) shall denote full compliance with a paragraph as a whole. Deviations shall be underlined and denoted by a number in the margin to the right of the identified paragraph. The remaining portions of the paragraph not underlined will signify compliance on the part of the Contractor with the specifications. Include a detailed, written justification for each deviation. Failure to include a copy of the marked-up specification sections, along with justification(s) for any requested deviations to the specification requirements, with the submittal shall be sufficient cause for rejection of the entire submittal with no further consideration.
4. Canopy Design and Drawings:
   a. Drawings, prepared and sealed by a Professional Civil Engineer or Structural Engineer registered in the state of California. Drawings shall include the following:
      1) Plans, elevations, sections, and details.
      2) Anchorage details
   b. Design calculations of the canopies, prepared and sealed by a Professional Civil Engineer or Structural Engineer registered in the state of California.
   c. Letter of Design Certification prepared and sealed by a Professional Civil Engineer or Structural Engineer registered in the state of California confirming responsibility for the design and attesting that the design prepared meets the performance criteria required by the Contract Documents, the requirements of governing authorities having jurisdiction at the Site and conforms to prevailing standards of practice. Letter of Design Certification shall include the following:
      1) Design Loads including dead load, deflection, wind loads/speeds and exposure, design spectral response accelerations at short and 1-second periods (S_{DS} & S_{D1}), seismic importance factor (I_e), response modification factor (R), seismic response coefficient (C_s), and auxiliary loads, such as loading superimposed on the system by erection equipment.

5. Anchor Bolt Design and Drawings:
   a. Drawings that include anchor bolt location plans, anchor bolt size, material, orientation, and column base plate details and base attachments where required.
   b. Anchor bolt calculations prepared and sealed by a Professional Civil Engineer or Structural Engineer registered in the state of California. Drawings shall include the unfactored building column loads imposed on foundations. Unfactored column loads are to be separately shown for dead load, live load, wind, and seismic load.
6. Erection drawings showing roof framing, tensioned cables, transverse cross sections, covering and trim details, and accessory installation details to clearly indicate proper assembly of the canopy components.
7. Product Data: Manufacturer's product information, specifications, and installation instructions for canopy components, and accessories.
8. Color charts showing full range of colors, textures, and patterns available.
9. Samples: Two of each of the following samples will be used as basis for evaluating quality of finished roof and wall systems and selection of colors.
   a. 24” x 24” canopy roofing fabric.
10. Quality Control Submittals:
    a. Certification that the Supplier has verifiable experience in the manufacture of similar canopies.
    b. Certification that the Canopy Erector has verifiable experience in the erection of similar canopies.

1.05 QUALITY ASSURANCE

A. Qualifications:
   1. Manufacturer Qualifications:
      a. The manufacturer shall have verifiable experience in the manufacture of similar canopies with non-combustible fabric material.
      b. The manufacturer shall have verifiable experience in the successful fabrication of permanent, custom tensile membrane structures.
      c. The manufacturer shall demonstrate that it has a fabrication facility of adequate capacity and staff experienced in the fabrication of PTFE-coated woven fiberglass tensile membrane structures.
   2. Erector Qualifications:
      a. Erector shall have verifiable experience in the erection of similar canopies.
      b. Erector shall be familiar with Manufacturer’s canopy systems, standard and/or custom concepts.
      c. Erection shall be performed by qualified erector using proper tools and equipment in accordance with manufacturer’s recommendations.
   3. Workman Qualifications:
      a. The erector shall provide at least one person who shall be present at all times during execution of the canopy work and who shall be thoroughly familiar with the canopy concept and the requirements, and who shall direct all work performed.

b. Workers employed by the erector shall be skilled in performing tasks related to the canopies.
c. Certified welding procedures and welding operators in accordance with AWS, where welding is involved.

4. Source Limitations: Obtain all the canopy components from single source from single manufacturer.
5. The Supplier shall use an ISA Approved Fabrication facility. Approval certificate shall be submitted up on request.

1.06 DELIVERY, STORAGE AND HANDLING

A. The canopy manufacturer and their installation contractor are responsible for the delivery, storage, and handling of materials.

B. Materials shall be delivered in a dry and undamaged condition and stored out of contact with the ground. Materials other than structural members shall be covered with weather tight covering and kept dry. Storage accommodations for roof and wall covering shall provide good air circulation and protection from surface staining.

PART 2 PRODUCTS

2.01 MANUFACTURERS

A. Candidate manufacturers are listed below. The manufacturer's standard product may require modification to conform to specified requirements:
   1. USA Shade
   2. Aztec Tents or
   3. Or approved equal

2.02 PERFORMANCE/DESIGN CRITERIA

A. General:
   1. Design of steel systems, members and components shall be in accordance with the Design Codes shown below.
   2. Workmanship, detailing of connections, fabrication and erection shall conform to the AISC Manual of Steel Construction.

B. Design Codes:
   1. The following standard codes have applications at this site for:

Design	Code
Buildings/Structures:	2019 California Building Code and ASCE 7-16
Structural steel:	AISC 360-10 and AISC 341-10
Cold formed steel:	AISI S100, Latest Edition
Welding:	AWS Welding Codes, Latest Edition
Occupational health and safety requirements:	OSHA

C. Design Loads:

1. Dead Loads:
   a. Dead loads used in the calculations shall be the weight of canopy system construction, such as framing, accessories, and covering materials.
2. Wind Loads:

Code:	2019 CBC & ASCE 7-16
Risk Category:	III (CBC Table 1604.5)
Basic Wind Speed (Ultimate, 3-second gust) for Risk Category Shown Above:	105 mph
Exposure:	D
Internal Pressure Coefficient G_{CPI}	+/- 0.18 (ASCE Table 25.13-1)
Topographic Factor (K_{zt})	1.0 (ASCE 26.8)
Gust Effect Factor G	0.85 (ASCE 26.11)

Note:

1. *Design to withstand the wind loads off the ocean.*

3. Seismic Loads:

Code:	2019 CBC ASCE 7-16
Risk Category:	III
0.2 Sec. Mapped Spectral Response, S_S:	1.228 g
1.0 Sec. Mapped Spectral Response, S_1:	0.423g
Site Class:	C
0.2 Sec. Design Spectral Response, S_{DS}:	0.982 g
1.0 Sec. Design Spectral Response, S_{D1}:	0.423 g
Importance Factor (I_e):	1.25
Site Coefficients	Fa = 1.200 g (ASCE Table 11.4.4) Fv = 1.500 g (ASCE Table 11.4.8)
Component Importance Factor (I_p):	1.0, except I_p=1.5 for components identified in Section 13.1.3 of ASCE 7
Seismic Design Category	D

4. Live Loads:

Slabs / Foundations	100 psf
Canopy	5 psf

D. Fire Performance:

1. Burning Characteristics (ASTM E84)

Flame Spread	5 Max.
Smoke Generation	20 Max.

2. Fire Resistance of Roof Coverings (ASTM E108)

Burning Brand	Class A

3. Incombustibility of Substrates (ASTM E136)

Substrate Noncombustible	Pass

4. Flame Resistance (NFPA 701 Small Scale, UL 94)

Flame Out	1 sec. after
Char Length	0.25-inch max.

E. Load Combinations:
   1. Design canopy systems to withstand the load combinations as specified in the governing building code.

F. Design Considerations:
   1. Minimum roof slope: 2 inch per foot or as shown on Drawings.
   2. Design structures and components for the following climatic conditions.
      b. Climatic Conditions:

Maximum design temperature:	120	degrees Fahrenheit
Minimum design temperature:	40	degrees Fahrenheit

   3. The canopy will be installed at a location close to an ocean and will be exposed to marine atmosphere continuously. All metals shall be galvanized steel or stainless steel.

G. Deflections:
   1. Calculations for building deflections shall be performed using only the bare frame method.
   2. Primary Framing:
      c. Horizontal Drift: H/80, not to exceed 2 1/2 inches, where H is the eave height of the building.
      d. Vertical Deflection: Per IBC limits.

H. Primary Framing and Anchor Bolts:
   1. Anchor bolt design, size and arrangements shall be coordinated between the canopy manufacturer and the foundation design as shown on the Drawings. Anchor bolt arrangements shall meet the minimum bolt spacing requirements per AISC codes. Anchor bolt design shall meet the requirements of ACI 318 Anchoring to Concrete chapter.

2.03 MATERIALS

A. Material specifications:

Material	Specification
Primary Framing Steel	
Mill-Rolled Structural Sections	ASTM A36, ASTM A572 Grade 50, or ASTM A992 as applicable
Built Up Sections	ASTM A572, ASTM A529, or ASTM A1011
Structural Bolts	
Steel	ASTM A325 or ASTM A490 or equal
Galvanized Steel	ASTM A325 (Type 1)
Anchor Bolts	
Galvanized	ASTM F1554, Hot Dip Galvanized
Stainless Steel	ASTM A193, Type 316, or A320, Type 316
Roof Panels	Architectural membrane as described subsequently

B. See Specification Sections 05 05 14, 05 05 20, and 05 50 00 for additional metal material information.

2.04 ARCHITECTURAL MEMBRANE

A. General: The membrane used for the canopies shall be polytetrafluoroethylene (“PTFE”, such as Teflon®) coated woven fiberglass. All references to “membrane” in this section, without exception, and whether singular, plural, or capitalized or not, are to such architectural membrane.

B. The membrane shall meet the following general requirements:
   1. Source Quality Control: The primary materials shall be obtained from a single manufacturer. Secondary materials shall be those recommended by the primary manufacturer.
   2. Physical Characteristics: The following indicates a range of physical property types for PTFE architectural membranes. The determination of specific characteristics and selection of a membrane shall be derived from analysis and calculations carried out by the Professional Engineer for this project.

a. Coated Fabric Weight (oz/sq. yd) (ASTM 4851)	24-45.5 nom.
b. Thickness (mils) (ASTM 4851)	18 – 36 nom.
c. Strip Tensile (lbs./in., avg.)	
1) Dry, Warp (ASTM 4851)	520 min. – 975 min.
2) Dry, Fill (ASTM 4851)	380 min. – 900 min.
d. Tensile after Flexfold (lbs/in.., avg.)	
1) Dry, Warp (ASTM 4851)	375 min. – 760 min.
2) Dry, Fill (ASTM 4851)	350 min. – 735 min.
e. Trapezoidal Tear (lbs. avg.)	
1) Warp (ASTM 4851)	35 min. – 95 min. avg.

2) Fill (ASTM 4851)	35 min. – 120 min. avg.
f. Solar Transmission (%) (ASTM 424)	7 – 22 nom.
g. Solar Reflectance (%) (ASTM 424)	70 – 75 nom.

C. Materials
1. Base Fabric: The yarns used shall be of the highest commercial quality, essentially free of broken fibers and fully suitable for coating. The fabric shall be woven with uniform tension and crimp in the warp and fill yarns and free of defects deleterious to the coating process.
2. Fluorocarbon Coatings: The coating materials shall be fluorocarbon resins formulated specifically for architectural applications. These materials shall be applied to form a weatherized barrier between the fiberglass yarns and the environment. The bulk of the coating shall be formulated dispersions of PTFE fluoropolymer resin and additives to enhance abrasion and tear resistance, impart pigmentation or modify solar transmission. The additives shall not constitute more than 20 percent by weight of the total coating or 25 percent by weight of any individual layer. The surface shall be totally a fluoroethylenepropylene ("FEP") resin to facilitate heat welding.
3. After weaving, the base fabric shall be cleaned and primed to achieve optimum mechanical properties of the coated membrane. The coating, described above, shall be virtually free of mud cracks and pinholes. The coating shall be applied evenly to both sides of the fabric and the FEP fluorocarbon resin topcoat shall be of sufficient thickness to permit proper heat fusion of joints with the recommended die pressure and temperature.

2.05 CABLE AND END FITTINGS

A. Materials
1. All structural wire rope cables shall conform to the latest revision of ASTM A 603.
2. All structural strand cables shall conform to the latest revision of ASTM A 586.
3. All cables shall be coated to "Class A" zinc coating throughout.
4. All cables in contact with the membrane shall be white PVC coated. All other cables may be galvanized only.

B. Fabrication
1. Cable fabricator shall provide effective quality control over all fabrication activities. Inspection of the place of fabrication may occur at any time to verify proper quality control. This inspection does not relieve the fabricator from meeting the requirements of this specification.
2. Cables that are designated to be pre-stretched shall be pre-stretched per ASTM A 603 for wire rope and ASTM A 586 for structural strand. Cables of the same type shall have the same modulus of elasticity.
3. All cables shall be manufactured to the following length tolerances at 70° Fahrenheit:
   a. Length < 70 feet ¼ inch

b. Length 70 to 270 feet 0.03% of length
c. Length > 270 feet 1 inch

4. Cables shall have a continuous longitudinal paint stripe (1/8 inch wide max.) along their top surface unless noted otherwise.
5. Index markings shown shall be a circumferential paint stripe (1/8 inch wide max.).
6. All cables and end fittings shall be delivered clean and dry.
7. All swaged and speltered fittings shall be designed and attached to develop the full breaking strength of the cable. Thimble end fittings shall develop a minimum of 90 percent of the cable breaking strength.
8. Swaged end fittings, pins, nuts, and washers shall be electro-galvanized. Any damage to the zinc coating shall be cleaned and painted with gray zinc-rich paint per ASTM A 780.
9. Speltered end fittings shall be hot dip galvanized per ASTM A 153. Any damage to the zinc coating shall be cleaned and painted with a gray zinc-rich paint per ASTM A 780.

2.06 ALUMINUM CLAMPING SYSTEM

A. Materials
1. All structural aluminum clamping systems shall be ASTM alloy 6061-T6.
2. Bent Plates shall be formed from ASTM B 221-08 alloy 6061 and then heat-treated to T6.
3. All structural “U straps” shall be ASTM B 221-08 Aluminum Alloy 6063, heat-treated to T5.
4. All structural aluminum clamping shall have the following finish:
   a. Polyester thermosetting powder coating with a tri-glycidyl di-isocyanurate (i.e. TGDI) curing agent/hardener per American Architectural Manufacturers Association (AAMA) 603 to a thickness of 3 mils, white in color or

   b. Clear anodized per MIL-A 8625C, Type 2, Class 1.
5. Structural sheet aluminum shall be ASTM B 209 alloy 5052-H32.
6. Non-structural sheet aluminum shall be ASTM B 209 alloy 1100 series.

B. Fabrication
1. Aluminum fabricator shall provide effective quality control over all fabrication activities. Inspection of the place of fabrication may occur any time to verify proper quality control. This inspection does not relieve the fabricator from meeting requirements of this specification.
2. Fabricated aluminum shall have no sharp edges.
3. Stamp all parts with the appropriate mark number.
4. All fabricated aluminum shall be free of oil, grease, and machining chips.
5. Tolerances shall be as follows:
   a. Cross sectional dimensions +/- 10%, 0.03 in. max.
   b. Bolt hold locations +/- 1/32 in.

c. Overall length +/- 1/16 in.

6. All welded joints shall conform to AWS D1.2.

2.07 STRUCTURAL STEEL

B. General: The structural steel fabrication shall comply with the latest revision of all applicable codes, standards and regulations including the following:
   1. ASTM (as referenced)
   2. AISC: "Specifications for the Design, Fabrication and Erection of Structural Steel for Buildings" and "Code of Standard Practice for Steel Buildings and Bridges"
   3. SSPC: "Steel Structures Painting Manual, Volumes 1 and 2"
   4. Research Council on Riveted and Bolted Structural Joints: "Specification for Structural Joints Using ASTM A 325 or A 490 Bolts"
   5. AWS D1.1 and AWS A2.4

C. In the event of conflict between pertinent codes and regulations and the requirements of the reference standards or these specifications, the provisions of the more stringent shall govern.

D. Submittals
   1. General: Submit the following under provisions of Section 01 33 00 – SUBMITTAL PROCEDURES.
   2. Shop Drawings:
      a. The structural steel fabricator shall submit shop drawings to the Supplier for approval.
      b. The drawings shall show all shop and erection details including cuts, copes, connection holes, threaded fasteners, bolts, stands and spacing, etc.
      c. The drawings shall show all welds, both shop and field, by the currently recommended symbols of the AWS.
      d. A welding procedure must be submitted to the Supplier for approval of welds that are not pre-qualified.
      e. Shop drawings shall be carefully checked before being submitted for approval and shall be submitted in the order in which they are needed for the executive of the work, well in advance and not all at one time. Submitted drawings shall show all structural steel required for the work, whether or not indicated on the drawings.
      f. The fabricator shall not fabricate any material until after receipt of approved shop drawings.
      g. The fabricator shall immediately make all corrections to his drawings as required by the Supplier and shall keep a satisfactory history of all changes by separately numbered and dated revision block on a convenient portion of each drawing affected.
      h. Certification of material conformance that includes chemical and physical

properties for all structural elements shall be submitted to the Supplier.

E. Materials
1. Structural steel for plates and bars shall conform to the requirements of ASTM A 36 or ASTM A 572, Grade 50, unless noted otherwise.
2. Structural pipe shall conform to ASTM A 53, Types E or S, Grade B.
3. Structural tubing shall conform to ASTM A 50, Grade B or C.
4. Structural bolts
   a. High strength bolts: ASTM A 325, unless noted
   b. Common bolts and nuts: ASTM A 307
   c. Threaded rods: ASTM A 36, unless noted
5. Other materials: All other materials, not specifically described but required for a complete and proper installation of structural steel, shall be provided and shall be new, free from rust, first quality of their respective kinds, and subject to the approval of the Supplier.

F. Accessories
1. Base Plates and Anchor Bolts
   a. Base plates supported on concrete, whether shop attached or shipped loose, shall be furnished, and set on shims or leveling plates. Grouting shall be by the General Contractor.
   b. Anchor bolt locations shall be furnished by the Supplier and used by the General Contractor to set the bolts. The General Contractor shall carefully check the setting of the bolts to their proper position prior to pouring of concrete. Anchor bolts, provided by the General Contractor, shall have two (2) nuts and washers. Damaged threads shall be repaired or be cut to permit full tightening of nuts.

G. Fabrication
1. Workmanship: All members when finished shall be true and free of twists, bends, and open joints between the component parts. Members shall be thoroughly straightened in the shop by methods that will not injure them, before being worked on in any way.
   a. Properly mark materials, and match-mark when directed by the Supplier, for field assembly.
2. Connections:
   a. Connections shall be as indicated on the drawings. When details are not shown, the connections shall conform to the requirements of the AISC.
   b. Provide high-strength threaded fasteners for all structural steel bolted connections, unless noted otherwise.
   c. Combination of bolts and welds in the same connection are not permitted, unless otherwise detailed.
   d. Welded Connections

1) Definitions: All terms herein relating to the welds, welding and oxygen cutting shall be construed in accordance with the latest revision of "Standard Definitions of Welding Terms and Master Chart of Welding Processes" of the AWS.
2) Operators: only operators who have been previously qualified by tests, as prescribed in AWS D1.1 to perform the type of work required shall make Welds.
3) Welding equipment shall be of sufficient capacity and maintained in good working condition, capable of adjustment in full range of current settings. Welding cables shall be adequate size for the currents involved and ground methods shall be such as to insure proper machine operation.
4) No welding shall begin until joint elements are clamped in proper alignment and adjusted to dimensions shown on the drawings and allowance for any weld shrinkage that is expected. No members are to be spliced without prior approval.
5) All welding shall be done in accordance with the reference specifications, with the following modifications and additions:
   a) All field welding shall be done by manual shielded metal-arc welding.
   b) All groove welds shall have complete penetration, unless otherwise specified on the drawings.
   c) The minimum preheat and inter-pass temperature requirements shall be as required per AWS D1.1.
6) Welding Sequence: Heavy sections and those having a high degree of restraint must be welded in a sequence with the proper preheat and post-weld heat treatment such that no permanent distortion occurs. Submit a welding sequence for approval for these types of connections.
7) Oxygen Cutting: Manual oxygen cutting shall be done only with a mechanically guided torch. Alternatively, an unguided torch may be used provided the cut is not within ½ inch of the finished dimension and the final removal is completed by chipping or grinding to produce a surface quality equal to that of the base metal edges. The use of oxygen-cut holes for bolted connections will under no circumstances be permitted and violation of this clause will be sufficient cause for the rejection of any pieces in which oxygen-cut holes exist.

3. Tolerances: All tolerances shall be as per the AISC "Code of Standard Practice for Steel Buildings and Bridges".
4. Paint System, Three-Part:
   a. Source Quality Control: Primary materials shall be obtained from a single manufacturer. Second materials shall be those recommended by the primary manufacturer.
   b. Surface Preparation and Base Coat

1) The surface shall be commercial blast cleaned in conformance with SSPC-SP10, after all fabrication operations such as machining and welding are completed. There shall be no more than an eight hour time lapse between the surface preparation and the application of the primate coat.
2) The base coat shall be Sherman Williams inorganic zinc rich coating (zinc clad II ethyl silicate). Color gray-green or approved equal and shall conform to SSPC- Paint 20.
3) The primer shall be mixed and applied in accordance with the manufacturer's instructions and shall meet the requirements of SSPC Paint Specification No. 20. The minimum thickness shall be 2.0 to 4.0 mils dft.

c. Intermediate Coat
   1) The intermediate coat shall be Sherman Williams Macropoxy 646 fast cure epoxy color Mil white or light blue or approved equal and shall conform to SSPC Paint Specification 22.
   2) The surface preparation is to conform to SSPC-SP10/NANCE 2.
   3) The intermediate coat shall be applied in accordance with the manufacturer's instructions. The minimum thickness shall be 4.0 – 6.0 mils dft.
d. Finish Coat
   1) The finish coat shall be Sherman Williams Hi-Solid Polyurethane (semi-gloss), or approved equal, and shall conform to SSPC – Paint number 36, Level 3.
   2) The finish coat shall be mixed and applied in accordance with the manufacturer's instructions and the minimum thickness shall be 3.0 to 4.0 mils dft.
e. Three-Part System Thickness: The minimum system thickness shall be 10.0 mils dft.
f. Color: The paint color shall be as selected by the Architect.
g. Finish Quality: The dry paint shall be uniform and continuous with no voids or puddles and shall not be broken by scratches or nicks. Although the Supplier's Quality Assurance personnel may witness the painting operation, this does not relieve the Painting Supplier of the responsibility for meeting the quality and workmanship requirements of these specifications.
h. Care and Handling: The painting Supplier shall make every reasonable effort to ensure that the painted steel is thoroughly dry and that it is handled carefully to prevent damage to the paint and to reduce field repairs. Nylon slings should be used when handling the painted steel.
i. Certification: The painting Supplier shall be required to certify the paint manufacturer's name, paint identification, conformance with manufacturer's written instructions, and the paint dry mil thickness.

H. Source Quality Control:
   1. Testing
      a. An independent testing laboratory approved by the City of San Diego shall perform testing and inspection of the structural steel and welding. All welds shall be tested by visual, dye penetrant, magnetic particle methods in accordance with instructions from the Supplier.
      b. The Supplier and the testing laboratory inspector shall be permitted to inspect the work in the shop or field throughout fabrication and erection.
      c. The inspector shall check for workmanship of steel, both in the shop and field, and check general compliance with the contract documents and steel shop drawings. The inspector shall record types and locations of all defects found in the work and measures required and performed to correct such defects.
      d. The steel fabricator shall make all repairs to defective work to the satisfaction of the inspector and at no additional cost to the Supplier.
      e. The inspector shall submit reports of his inspection and test findings to the Supplier. He shall record all defects found with the subsequent repair operations and submit reports to the Supplier.
      f. The work of the independent inspector shall in no way relieve the steel fabricator of his responsibility to comply with all requirements of the contract documents.

I. Product Handling and Protection: Use all means necessary to protect structural steel before, during, and after installation, and to protect the installed work and materials of all other trades.

J. Rejection and Replacement:
   1. In the event of damage to the steel, immediately make all repairs and replacements necessary to the approval of, and at no additional cost, to the Supplier.
   2. Any materials or welding rejected through inspection either in the shop, mill, or field must be promptly replaced to the satisfaction of, and at no additional cost to, the Supplier.

2.08 FASTENERS

A. General: Provide fasteners used to secure clamp systems to curbs and cables, assemblage of clamp systems, and other fasteners as required to complete the work specified herein.

B. Materials:
   1. All work shall comply with the latest edition of ASTM standards and American Iron and Steel Institute (AISI), as referenced herein.
   2. Fasteners used in membrane clamping systems shall be stainless steel. Bolts

and studs shall conform to ASTM F 593, Type 304. Nuts shall conform to ASTM F 594, Type 316. Washers shall be plain, narrow, and conform to AISI Type 18-8.

3. All clamping systems subjected to relative movement between clamping and curb shall receive a split-ring lock washer conforming to AISI Type 18-8.
4. Unless otherwise specified on the drawings, all other bolts and nuts shall conform to ASTM A 307-76B, zinc plated to conform to ASTM B 633 Class FE/ZN 8 type III.

PART 3 – EXECUTION

3.01 ERECTION OF MEMBRANE ASSEMBLIES

A. Prior to installation of the membrane assemblies, the Supplier shall meet with the Contractor to review the erection procedure and scheduling. The Supplier shall coordinate all work with other trades.

B. No trade shall have access to, or work from the membrane, unless authorized by the Supplier in writing.

C. Erection of structural steel
   1. The Supplier shall employ a competent foreman to supervise all work of steel erection. This foreman shall be present at all times during the Supplier's scope of work.

   2. All precautions shall be taken to ensure an accurately located and completely safe and stable structure at all times. Adequate guy cables shall be used throughout the work and all erection bolts shall be drawn up tight.
   3. All steel shall be accurately aligned before permanent connections are made.
   4. Temporary bracing shall be left in place as long as may be required for safety. The bracing shall be located so it does not interfere with the erection for the tensile membrane structure and can be removed as required during construction.
      a. The structure is to be self-supporting and stable after the structure is fully completed. It is the Supplier's sole responsibility to determine the erection procedure and sequence and to ensure the safety of the structure and its component parts during erection. This includes the addition of whatever temporary bracing, guy wire or tie-downs that may be necessary. Such materials shall be removed by the Supplier and remain his/her property after completion of the property.
   5. Erection tolerances shall be specified in the AISC "Code of Standard Practice for Steel Buildings and Bridges", unless otherwise noted.

3.02 CLEANING

A. Protect work from damage and deterioration during installation.

B. Upon completion of tensile membrane structure installation:
   1. The Supplier shall clean all surfaces of the system's components in conformance with the membrane manufacturer's recommendations.
   2. Inspect the system and repair membrane panels that become damaged. Repairs shall be executed in such a way that they are visually acceptable.

C. Steel Cleaning:
   1. Cleaning and touchup of steel finishes, field welds, bolted connections and abraded areas shall be completed per the manufacturer's field repair recommendations.

3.03 FINISHES

A. Coating of Primary Framing and Secondary Members:
   1. Primary structural steel framing shall be galvanized per ASTM A123. Field touch-up shall be with Galvicon 1-4853 by Southern Coatings or approved equal.
   2. Prior to galvanizing, steel shall be cleaned of loose rust, loose mill scale, dirt, and other foreign material.

3.04 EXAMINATION

A. Examine and accept existing conditions before beginning work.

B. Check lines and elevations of concrete bearing surfaces.

C. Confirm locations of anchor bolts and similar devices before metal building erection proceeds.

D. Report discrepancies immediately to the City. Do not proceed with erection until corrections have been made, or until compensating adjustments to the steelwork have been agreed upon.

3.05 PREPARATION

A. Prior to performing work of this section, verify that work of other trades, as applicable, is complete for commencement of installation.

B. Obtain manufacturer's written instructions before commencing erection or installation.

3.06 ERECTION

A. Erect the work in accordance with Specifications, Drawings, and manufacturer's directions.

B. Conform to configurations and connections indicated on reviewed and accepted shop and erection drawings.

C. Accurately position and assemble structural framing to lines and members of framing system prior to permanent fastening.

D. Erector shall not make any field modifications to any structural member except as authorized and/or specified by manufacturer in writing, with a copy to the City.

E. Approved Field Modification: Perform in a manner not to impair appearance, weather tightness, or structural quality of material or structure.

3.07 REPAIR/RESTORATION

A. Replace damaged components that cannot be repaired by finish touch-up or similar minor repair.

B. Touch-up coatings: Immediately after erection, clean field welds, bolted connections, and areas where coating is abraded. Apply coating to exposed areas using same material as used for shop coating.

C. Replace or restore the following to original condition:
   1. Surface finishes damaged prior to or during erection.
   2. Components where material and workmanship does not meet specified requirements.

D. Minor Scratches, Dents, And Holes: Repair and paint with similar enamel of thickness and color to match original coating.

3.08 FIELD QUALITY CONTROL

A. Manufacturer's Field Services: Supplier's Representative shall be present at jobsite for installation assistance, inspection, and certification of installation.

B. The City's Special Inspector will inspect and indicate if work is in conformance with specifications. This inspection will include products, erection, welding, grouting and similar construction. The Inspector will verify that the work has been performed in accordance with AISC and this specification.

C. Maximum deviations from plumb, level, and alignment are not to exceed AISC specifications, and tolerances specified in this section.

D. Defective Work: Promptly remove and replace materials and fabricated components that do not comply. Furnish, perform, and install to specified requirements.

END OF SECTION

THIS PAGE INTENTIONALLY LEFT BLANK

SECTION 13 34 23.25

PRE-FABRICATED ELECTRICAL EQUIPMENT ENCLOSURE

PART 1 GENERAL

1.01 DESCRIPTION

A. Scope:

1. Design, construction, performance requirements, inspection, testing, documentation, and shipping requirements for a new prefabricated Electrical Equipment Enclosure (EEE). The EEE shall be environmentally controlled and shall consist of a coordinated grouping of electrical power and control equipment as indicated on drawings. Any data sheets, drawings, or any other related documents accompanying this Specification should be considered a part of this Specification.
2. Furnish, install, interconnect and test the equipment and materials specified herein, as well as any equipment specified in any related documents. The EEE manufacturer shall be responsible to procure, install, and commission all electrical equipment shown on the drawings.
   a. Control panels shown in the CONTROL ROOM are to be provided by others and field installed by the Contractor.
   b. Contractor shall coordinate control panels with the system integrator in Division 40 and provide information to the EEE manufacturer as required.
3. To ensure that all similar equipment under the Contract are procured from the same manufacturer, the Contractor shall coordinate with the EEE manufacturers and other suppliers that are required to be installed in the EEE to the EEE manufacturer's facility for installation and testing after equipment / system level testing at the respective manufacturer's facility. The Contractor shall be responsible for coordinating the schedule and logistics for delivery of the of items that are planned for installation within the EEE with the respective equipment/system manufacturers and EEE manufacturer. All costs associated with the transportation, storage and final testing shall be part of the Contract.
4. The EEE manufacturer is responsible for the following:
   a. Procurement of all equipment.
   b. Prepare, submit, and get submittals for EEE approved by the Engineer through the Contractor.
   c. Coordinate schedule through the Contractor to receive the approved submittals and equipment/systems for items that are supplied by others are shipped to EEE manufacturer in a timely manner.
   d. Receipt, Storage, installation, and final testing of items supplied by others that are planned for installation within the EEE. Contractor shall be responsible for coordination between EEE manufacturer and other manufacturers/suppliers.
   e. Fabrication of EEE.
   f. Testing and commissioning prior to shipping the EEE to the site.

g. Delivery and installation of EEE on site.

B. Assist in field testing of EEE.

C. Site conditions are shown on Drawings. These conditions shall be considered when sizing and designing the EEE.

D. Structure:
1. Fabricated metal enclosure designed to be moved and installed as a single unit.

E. Location And Orientation:
1. The enclosure supplied under this specification shall be sited with the doors oriented as shown on the drawings.

1.02 QUALITY ASSURANCE

A. References:
1. This section contains references to the following documents. They are a part of this section as specified and modified. Where a referenced document contains references to other standards, those documents are included as references under this section as if referenced directly. In the event of conflict between the requirements of this section and those of the listed documents, the requirements of this section shall prevail.
2. Unless otherwise specified, references to documents shall mean the documents in effect at the time of Advertisement for Bids or Invitation to Bid (or on the effective date of the Agreement if there were no Bids). If referenced documents have been discontinued by the issuing organization, references to those documents shall mean the replacement documents issued or otherwise identified by that organization or, if there are no replacement documents, the last version of the document before it was discontinued. Where document dates are given in the following listing, references to those documents shall mean the specific document version associated with that date, regardless of whether the document has been superseded by a version with a later date, discontinued or replaced.

Reference	Title
ACI 214	Evaluation of Strength Test Results of Concrete
ACI 301	Structural Concrete for Buildings
ACI 305R	Hot Weather Concreting
ACI 318	Building Code Requirements for Structural Concrete
ACI 347	Concrete Formwork
ASTM A615/A615M EV B	Deformed and Plain Billet Steel Bars for Concrete Reinforcement
ASTM C31	Making and Curing Concrete Test Specimens in the Field
ASTM C33	Concrete Aggregates
ASTM C39	Compressive Strength of Cylindrical Concrete Specimens

Reference	Title
ASTM C40	Organic Impurities in Fine Aggregate for Concrete
CRD-C572	Corps of Engineers Specifications for Polyvinylchloride Waterstop
IBC	International Building Code

1.03 DESIGN CRITERIA

A. Members shall be designed in accordance with International Building Code (IBC) to withstand dead load and design loads due to pressure and suction of wind calculated in accordance with an applicable 105 mph wind zone and for seismic design requirements per Section 01 88 15.

B. Minimum design live loads in pounds per square foot are:
   1. Roof - 40 per square foot
   2. Floor - 250 per square foot

C. Exterior wall and roof system shall be designed to withstand imposed loads and shall be water tight. Assemble to permit movement of components without buckling, failure of joint seals, undue stress on fasteners or other detrimental effects, when subjected to temperature ranges of 32 to 110 degrees F.

D. Enclosures shall be designed to house mechanical and electrical equipment as indicated on the drawings. Contractor to provide structural members as required to support weights and to provide seismic bracing for mechanical equipment, ductwork, pipes, and electrical conduit.

E. Coordinate equipment within the enclosure with spacing requirements shown on the electrical drawings for equipment clearance and block-outs for electrical conduits.

1.04 SUBMITTALS

A. The following information shall be submitted in accordance with Section 01 33 00:
   1. A copy of this Specification Section, with addendum updates included, and all referenced and applicable Sections, with addendum updates included, with each paragraph check-marked to indicate Specification compliance or marked to indicate requested deviations from Specification requirements. Checkmarks (□) shall denote full compliance with a paragraph as a whole. If deviations from the Specifications are indicated, and therefore requested by the Contractor, each deviation shall be underlined and denoted by a number in the margin to the right of the identified paragraph, referenced to a detailed written explanation of the reasons for requesting the deviation. The Construction Manager shall be the final authority for determining acceptability of requested deviations. The remaining portions of the paragraph not underlined will signify compliance on the part of the Contractor with the Specifications. Failure to include a copy of the marked-up Specification Sections, along with justification(s) for any requested deviations to

the Specification requirements, with the submittal shall be sufficient cause for rejection of the entire submittal with no further consideration.

2. Structural:
   a. Enclosure structure plans, general notes, and details. Include building elevations, all foundation anchorage details and proposed modifications to details shown on Drawings. Materials and Details: Show materials, details of components (including doors and other accessories), finishes, fastenings, methods of joining, sealants, anchor bolts, and baseplate details including sizes and dimensions, size and location of structural members, openings, and stairs and landing details.
3. Structural Calculations:
   a. Structural calculations stamped by a civil or structural engineer registered in the State of California and in compliance with design criteria and loads shown on Drawings. Design and installation of the equipment enclosure and appurtenances furnished under this Contract shall comply with Specification section 01 88 15 , ANCHORAGE AND BRACING .
   b. Anchorage and bracing calculations. Include confirmation that the foundation drawings are compatible with prefabricated building.
4. Electrical Drawings including the following:
   a. Building electrical plan, showing conduit, cable tray, subfloor wireway, and any other means of wiring transit. Drawings shall also include conduit fill.
   b. Building services wiring diagrams.
   c. Grounding system plan.
   d. Interconnection wiring diagrams.
   e. Panelboard schedules.
   f. Lighting plans and lighting control diagrams.
5. HVAC complete information, including the following:
   a. Calculations showing the amount of cooling required in the electrical equipment enclosure. Calculations must include the ambient temperature, the indoor design temperature (see value specified elsewhere in this specification section), the list of heat loads with corresponding values in Btu/hr, recommendation on number and size of air conditioning unit(s), power required for each unit (number of motors and corresponding full load amps FLA, (horsepower, voltage, phase, Hz), etc.
   b. Shop Drawings:
      1) HVAC drawings; showing location of HVAC equipment; drains (including pipe size); filters; ductwork (supply and return), if applicable; registers with amount of air being supplied/returned in cfm (cubic feet per minute), if applicable; all electrical schematics, wiring and control diagrams for all components being supplied; etc.
      2) HVAC catalog cut sheets indicating make, model, dimensions, weight of the equipment, complete performance data of each unit (cooling performance at design operating conditions), minimum operating efficiency (EER).

c. HVAC operating and maintenance manual
d. HVAC controls

6. Manufacturer's installation instructions, including site preparation.

B. Submittal Review Meetings: Contractor shall arrange for minimum two submittal review meetings with the Owner, Construction Manager, Engineer, local Project Manager and the Factory Engineer. The first meeting shall be held before the design and submittal of the EEE. The second meeting shall be held after the Contractor has received the Owner/Engineer's review comment(s) of the first submittal.

PART 2 PRODUCTS

2.01 MANUFACTURERS

A. The Owner and Construction Manager believe the following candidate manufacturers are capable of producing equipment and/or products that will satisfy the requirements of this Section. This statement, however, shall not be construed as an endorsement of a particular manufacturer's products, nor shall it be construed that named manufacturers' standard equipment or products will comply with the requirements of this Section. Candidate manufacturers includes: Eaton, Myers Power Products, Powell Industries, Scheider Electric, Rockwell, or approved equal.

2.02 GENERAL

A. The prefabricated building shall be designed and constructed for outdoor use under wind and seismic load conditions per the CBC guidelines for the Job Site. Refer to General Structural notes on Drawings for design criteria. The prefabricated building shall be elevated to be protected from flooding.

B. The building and all components mounted thereon shall be designed for, braced, and anchored sufficiently for transportation to the Job Site.

C. The skid shall be of all welded, seamless construction utilizing ASTM A36 structural steel members, sized and arranged for proper strength, and able to withstand the stress and loads which will result when lifting the complete factory fabricated and equipped assemblies.

1. Deflection shall be L/240. The building shall be suitable for installation on a concrete pad or on piers.
2. The skid shall be equipped with four (4) stainless steel ground pads located at opposite corners of the skid for connecting the building grounding system to the plant ground grid.

D. Provide cutouts in the floor where required for conduit entry into the equipment. The cutouts shall be provided with surface mounted one-fourth (1/4) inch smooth steel cover plates.

E. Provide framed wall cutouts and blank-off plates where required for conduit entry into the enclosure.

F. All equipment frames and ground buses shall be bonded with 4/0 AWG (minimum) green insulated copper ground cable to a ¼" x 2" copper bus bar inside the building.

2.03 ENCLOSURE

A. Enclosure size shall be as shown on the Drawings. Divide room(s) with door(s) as shown on the drawings.

B. Enclosure roof, walls, and floor shall be constructed of 5,000 psi minimum reinforced concrete. Enclosure roof slope shall be a minimum of 1-inch to the rear or side of the enclosure as controlled by the shortest distance. Enclosure exterior and interior, doors, and frames shall be painted as specified in Section 09 90 00.

C. Provide landings and stairs for the enclosure. The stairs shall be built in compliance with the CBC code and contract drawings.

D. The walls, roof and floor shall be fully insulated to meet the requirements of the California Energy Code.

2.04 HVAC

A. Provide a complete HVAC system, sized and provided by the Supplier, designed to maintain an ambient temperature within the building of between fifty-five (55) degrees F winter and eighty-five (85) degrees F summer at minimum and maximum design temperature conditions.

B. Provide thermostat control for each room.

C. HVAC system shall meet CA Title 24 requirements.

2.05 FIRE PROTECTION

A. Provide fire protection equipemnet required per fire code. As a minimum, a total of three portable 5 lb ABC Dry powder fir extinguishers – two (2) in the Electrical Room and one (1) in the Control Room. Install the fire extinguishers on the walls using wall brackets.

2.06 CONTROL ROOM FURNITURE

A. Main Control Room Consoles: The control console in the Control Room shall be custom fabricated for this project and shall include all casework in the control room. The Control Room Console shall be custom designed to accommodate two workstations, three flat-screen LED 21-inch monitors, two under-counter keyboards, under-counter storage cupboards and other equipment and furniture specifics as detailed in the contract drawings. A total of three matching, adjustable, office style chairs with casters shall be furnished with the consoles (2 for the control room). Consoles, storage cabinet and casework shall be the product of same supplier. Consoles shall be freestanding desk type consoles and shall conform to the following:

1. Consoles shall consist of a steel and aluminum framework assembled in modular sections. All console access doors shall be lockable.
2. All electronics shall be supported by extruded aluminum, which conforms to EIA 19” rack mounting standards.
3. All work surfaces shall be approximately 28” above floor level.
4. All work surfaces shall be finished in a high-pressure laminate on an 11/16” 45 pound core.
5. Consoles shall be furnished complete with telephone blank panel kits, keyboard drawers (in quantities indicated on the network drawings) and diffused task lighting.
6. All cable interconnections between console mounted devices shall use flexible cables with plug connectors. Cable lengths shall be of sufficient length to enable the withdrawal of equipment from the console without the need to disconnect plugs. All data and power cabling shall be routed within the console’s integral wireways.
7. Louvered openings shall be provided at the bottom of each console section to permit adequate ventilation. A ventilation fan shall be provided for every section designated to house a workstation (current and future).
8. The Contractor shall submit manufacturer samples of standard console finishes and colors for review. Final console color, finish and proposed layout (as developed by the manufacturer) shall be submitted to the Engineer and City of San Diego for approval prior to fabrication.
9. Other casework in control room shall match the consoles in color, finish and material as per City of San Diego’s final selection.
10. Consoles shall be as manufactured by Evans Consoles. The Control Room Control Console shall be the reduced-depth Identity Series; the Workstation Room console shall be the reduced-depth Strategy Series (with front access to processors). Proposed console arrangement designs, as assembled by the manufacturer, shall be submitted to the Engineer and City of San Diego for review prior to final procurement approval.

2.07 ELECTRICAL DISTRIBUTION EQUIPMENT

A. Requirements of the specification sections apply to the electrical systems associated with the prefabricated EEE.

B. Provide electrical distribution equipment as shown on the Drawings in accordance with Div 26 electrical equipment, HVAC and other building loads.

C. General: In accordance with Section 26 05 00, COMMON WORK RESULTS FOR ELECTRICAL.

D. Wiring: In accordance with Section 26 05 19, LOW-VOLTAGE ELECTRIALC POWER CONDUCTORS AND CABLES.

E. Grounding and Bonding: In accordance with Section 26 05 26, GROUNDING AND BONDING FOR ELECTRICAL SYSTEMS.

F. Conduits and Boxes: In accordance with Section 26 05 33, RACEWAYS AND BOXES FOR ELECTRICAL SYSTEMS.

G. Miscallenous electrical equipment: In accordance with Section 26 09 16, ELECTRICAL CONTROLS AND RELAYS.

H. Transformers in accordance with Section 26 22 00, LOW-VOLTAGE TRANSFORMERS.

I. Panelboards in accordance with Section 26 24 16, PANELBOARDS.

J. MCC in accordance with Section 26 24 19, MOTOR CONTROL CENTERS.

K. Wiring devices in accordance with Section 26 27 26, WIRING DEVICES.

L. VFD in in accordance with Section 26 29 23, VARIABLE FREQUENCY MOTOR CONTROLLERS.

M. Convenience Receptacles:
   1. Interior:
      a. Provide receptacles where shown on drawing. Mount at forty-eight (48) inches above floor elevation.
   2. Exterior:
      a. Provide GFCI receptacles where shown on drawing. Mount at forty-eight (48) inches above floor elevation.

N. Light Switches:
   1. Provide two/three-way dimmable light switches adjacent to the doorways to control interior lights.

O. Lighting:
   1. As shown on contract drawing and in accordance with Section 26 51 19, LED LIGHTING.
   2. Interior Lighting:
      a. Provide ceiling-mounted linear LED luminaires to provide a maintained average illuminance of not less than fourty (40) foot-candles measured at three (3) feet above the floor of the enclosure. Use an overall light loss factor of 0.85 for lighting calculations.
      b. Provide emergency battery ballasts in the luminaires as shown on the Drawings.
   3. Exterior Lighting:
      a. Provide wall-mounted full-cutoff LED luminaires to provide a maintained average illuminance of not less than five (5) foot-candles over an area within

six (6) feet of each of the doorways. Use an overall light loss factor of 0.85 for lighting calculations.

4. Use the electronic programmable time switch and photocell to control the exterior lights.
5. Lighting system system shall meet CA Title 24 requirements.

PART 3 EXECUTION

3.01 INSTALLATION OF ACCESSORIES

A. Doors, windows, and associated frames shall be installed in accordance with the manufacturer's recommendations and penetrations sealed watertight.

B. Floor penetrations for electrical conduit that enter from Electrical Enclosure from below the slab into the electrical equipment panels and cabinets shall be sealed after installation to prevent moisture, animals, and insects from entering.

C. Install equipment in accordance with manufacturer’s instructions and recommendations.

D. Secure equipment to mounting pads with anchor bolts.

E. Install equipment plumb and in longitudinal alignment with pad or wall.

F. Verify foundation layout compatibility with manufacturers submitted drawings prior to foundation construction.

3.02 COORDINATION

A. Coordinate floor slab conduit penetration and installation with installation Contractor. Provide block-outs as directed by installation Contractor based upon electrical equipment component layout as shown, as required by code, or as required by the site conditions.

3.03 FINISHES

A. Enclosure exterior, the doors and frames, and the HVAC equipment shall be coated in accordance with the requirements of Section 09 90 00. HVAC equipment coils shall have Heresite coating to protect from corrosive environment.

3.04 TESTING

A. HVAC equipment and electrical equipment furnished with the electrical enclosure shall be tested in accordance with requirements of Section 01 91 14.

END OF SECTION

THIS PAGE INTENTIONALLY LEFT BLANK

SECTION 26 05 00
COMMON WORK RESULTS FOR ELECTRICAL

PART 1 GENERAL

1.01 DESCRIPTION

A. Scope:
   1. This section specifies general requirements for electrical work. Detailed requirements for specific electrical items are specified in other sections but are subject to the general requirements of this section.
   2. The electrical drawings and schedules included in this project manual are functional in nature and do not specify exact locations of equipment or equipment terminations.

B. Definitions:
   1. Elementary or Schematic Diagram:
      a. A schematic (elementary) diagram shows, by means of graphic symbols, the electrical connections and functions of a specific circuit arrangement. The schematic diagram facilitates tracing the circuit and its functions without regard to the actual physical size, shape, or location of the component devices or parts.
   2. One-Line Diagram:
      a. A one-line diagram shows by means of single lines and graphical symbols the course of an electrical circuit or system of circuits and the components, devices or parts used therein. Physical relationships are usually disregarded.
   3. Block Diagram:
      a. A block diagram is a diagram of a system, instrument, computer, or program in which selected portions are represented by annotated boxes and interconnecting lines.
   4. Wiring Diagram or Connection System:
      a. A wiring or connection diagram includes all of the devices in a system and shows their physical relationship to each other including terminals and interconnecting wiring in an assembly. This diagram shall be (a) in a form showing interconnecting wiring only by terminal designation (wireless diagram), or (b) a panel layout diagram showing the physical location of devices plus the elementary diagram.
   5. Interconnection Diagram:
      a. Interconnection diagrams shall show all external connections between terminals of equipment and outside points, such as motors and auxiliary devices. References shall be shown to all connection diagrams which interface to the interconnection diagrams. Interconnection diagrams shall be of the continuous line type. Bundled wires shall be shown as a single line with the direction of entry/exit of the individual wires clearly shown. Wireless diagrams and wire lists are not acceptable.

1) Each wire identification as actually installed shall be shown. The wire identification for each end of the same wire shall be identical. All devices and equipment shall be identified. Terminal blocks shall be shown as actually installed and identified in the equipment complete with individual terminal identification.
2) All jumpers, shielding and grounding termination details not shown on the equipment connection diagrams shall be shown on the interconnection diagrams. Wires or jumpers shown on the equipment connection diagrams shall not be shown again on the interconnection diagram. Signal and DC circuit polarities and wire pairs shall be shown. Spare wires and cables shall be shown.

6. Arrangement, Layout, Or Outline Drawings:
   a. An arrangement, layout, or outline drawing is one which shows the physical space and mounting requirements of a piece of equipment. It may also indicate ventilation requirements and space provided for connections or the location to which connections are to be made.

1.02 QUALITY ASSURANCE

A. References:
1. This section contains references to the following documents. They are a part of this section as specified and modified. Where a referenced document contains references to other standards, those documents are included as references under this section as if referenced directly. In the event of conflict between the requirements of this section and those of the listed documents, the requirements of this section shall prevail.
2. Unless otherwise specified, references to documents shall mean the documents in effect at the time of Advertisement for Bids or Invitation to Bid (or on the effective date of the Agreement if there were no Bids). If referenced documents have been discontinued by the issuing organization, references to those documents shall mean the replacement documents issued or otherwise identified by that organization or, if there are no replacement documents, the last version of the document before it was discontinued. Where document dates are given in the following listing, references to those documents shall mean the specific document version associated with that date, regardless of whether the document has been superseded by a version with a later date, discontinued or replaced.

Reference	Title
Title 8, Subchapter 5	California Code of Regulations, Electrical Safety Orders
Title 24, Part 3	California Electrical Code, latest adopted edition
Title 24, Part 6	California Energy Code, latest adopted edition

3. Commercial Standards:
   a. All material, equipment, and construction, installation, and testing procedures shall conform to applicable standards of NEMA, ANSI, and IEEE except where modified or supplemented by these Specifications. All equipment and

materials shall be in accordance with the applicable requirements of the California Code of Regulations (CCR), Title 8.

B. Identification of Listed Products:
   1. List electrical equipment and materials for the purpose for which they are to be used, by an independent testing laboratory. Three such organizations are Underwriters Laboratories (UL), Canadian Standards Association (CSA), and Electrical Testing Laboratories (ETL). Independent testing laboratory shall be acceptable to the inspection authority having jurisdiction.
   2. When a product is not available with a testing laboratory listing for the purpose for which it is to serve, the product may be required by the inspection authority, to undergo inspection at the manufacturer's place of assembly. All costs and expenses incurred for such inspections shall be included in the original contract price.

C. Factory Tests:
   1. Where specified in the individual product specification section, perform factory tests at the place of fabrication and performed on completion of manufacture or assembly. Include the costs of factory tests in the contract price.

1.03 SUBMITTALS

A. Provide submittals in accordance with Section 01 33 00 and the following: The following submittals shall be provided in accordance with Section 01 33 00:
   1. A copy of this specification section, with addendum updates included, and all referenced and applicable sections, with addendum updates included, with each paragraph check-marked to indicate specification compliance or marked to indicate requested deviations from specification requirements.
   2. Check marks (□) shall denote full compliance with a paragraph as a whole. If deviations from the specifications are indicated, and therefore requested by the Contractor, each deviation shall be underlined and denoted by a number in the margin to the right of the identified paragraph, referenced to a detailed written explanation of the reasons for requesting the deviation.
   3. The Engineer shall be the final authority for determining acceptability of requested deviations. The remaining portions of the paragraph not underlined will signify compliance on the part of the Contractor with the specifications.
   4. Failure to include a copy of the marked-up specification sections, along with justification(s) for any requested deviations to the specification requirements, with the submittal shall be sufficient cause for rejection of the entire submittal with no further consideration.
   5. Catalog cuts of equipment, devices, and materials requested by the individual specification sections. Catalog information shall include technical specifications and application information, including ratings, range, weight, accuracy, etc. Non-applicable items on catalog cuts shall be crossed out.
   6. Interconnection diagram: The Contractor shall prepare interconnection diagrams depicting all cable requirements together with their actual terminations as specified in paragraph 1.01 Definitions.

7. Conduit layout drawings indicating size, location, and support, for all conduits other than single runs of 1-inch diameter or less cast in concrete construction.
   a. Conduit layout drawings shall illustrate a system which conforms to the requirements of paragraph 3.01 Conduits in Concrete Construction.
   b. For layouts that do not conform to paragraph 3.01 Conduits in Concrete Construction, provide engineering design and calculations signed and sealed by a Professional Engineer registered in the state of the project.
   c. Engineering design and calculations shall demonstrate that the proposed layout does not impair or significantly reduce the design structural strength.

1.04 PROJECT/SITE CONDITIONS

A. General: Unless otherwise specified, size and derate equipment and materials for the ambient conditions specified in Section 01 11 80, but not less than an ambient temperature of 40 degrees C at an elevation ranging from sea level to 3000 feet without exceeding the manufacturer's stated tolerances.

B. Corrosive Areas:
   1. All outdoor areas

C. Hazardous (Classified) Areas:
   1. The following areas are designated as hazardous (classified) in accordance with the NEC:

Area	Hazardous Classification
None	None

D. Enclosure Material and Rating
   1. Table A specifies the electrical enclosure material and rating for the location and application.

TABLE A	
Location	Electrical Enclosure Material and NEMA Rating
Indoor: Architecturally Finished Area	NEMA 1: Mild steel
Indoor: Electrical/Control Room	NEMA 1: Mild steel
Indoor: Process Areas	NEMA 4X: Stainless Steel
Indoor: Corrosive Area	NEMA 4X: Stainless Steel
Outdoor: Corrosive Area	NEMA 4X: Stainless Steel
Outdoor: Non-Corrosive Areas	NEMA 4X: Stainless Steel
Corrosive Area (Hypochlorite)	NEMA 4X: Fiberglass
Corrosive Area (Polymer)	NEMA 4X: Stainless Steel
Hazardous Area: Class I Division 2	NEMA 4X: Stainless Steel
Hazardous Area: Class I Division 1	NEMA 7: Galvanized Malleable Iron or Aluminum

E. Support Material and Rating
   1. Table B specifies the support material for mounting and supporting equipment and rating for the location and application.

Table B

Location	Framing Channel	Threaded Rod, Hardware, & Fittings
Indoor, Architecturally finished Area	Steel, HDG	Steel, HDG
Indoor, Electrical Room	Steel, HDG	Steel, HDG
Indoor, Process Areas	Stainless Steel	Stainless Steel
Corrosive Area (hypochlorite area)	Fiberglass	Fiberglass
Corrosive Area (polymer area)	Stainless Steel	Stainless Steel
Indoor, Corrosive Area (general)	Stainless Steel	Stainless Steel
Outdoor, Corrosive Area (general)	Stainless Steel	Stainless Steel

HDG = Hot Dip Galvanized Finish; PVC = PVC Coated

F. Seismic: Design and install electrical equipment, supports, and anchorage in accordance with the seismic design requirements specified in Section 01 88 15.

1.05 STORAGE OF MATERIALS AND EQUIPMENT

A. Store materials and equipment as specified in Section 01 61 00. Seal indoor designated equipment and materials with plastic wrap and store.

PART 2 PRODUCTS

2.01 EQUIPMENT AND MATERIALS

A. General: Provide equipment and materials new and free from defects. Provide all material and equipment of the same or a similar type from the same manufacturer throughout the work. Use standard production materials wherever possible.

B. Equipment Finish: Unless otherwise specified, manufacturer will paint electrical equipment as specified in Section 09 90 00.

C. Galvanizing: Where specified, provide galvanizing in accordance with Section 05 05 14.

2.02 NAMEPLATES

A. Nameplates shall be made from laminated phenolic plastic.
   1. Nominal size: 3/4 inch high by 2 inches long.
   2. Black backgrounds with 3/16-inch white letters.
   3. Fastened using self-tapping stainless steel screws. Nameplate adhesives will not be permitted on the outside of enclosures.

4. Abbreviations shall be submitted to the Construction Manager prior to manufacture because of space limitations.

2.03 PRODUCT DATA

A. The following information and product data specified under individual specification sections shall be provided in accordance with Section 01 33 00.
   1. Applicable operation and maintenance information on an item-by-item basis in accordance with Section 01 78 23. Provide operation and maintenance information at the time of equipment, device, or material site delivery, or at a certain stage of project completion as required by Section 01 78 23, whichever is the earlier. Reduce full-size drawings to 11 x 17 inches.
   2. Provide test results for motors and electrical systems on the forms specified in Section 26 08 00. Maintain a file of the original test. Prior to acceptance of work, provide the resulting file to the Construction Manager.
   3. Description of functional checkout procedures specified under paragraph 3.02 Pre-Functional Test Checkout provided 45 days prior to performing functional checkout tests.
   4. Record documents specified in Section 01 77 00 and paragraph 3.03.

PART 3 EXECUTION

3.01 GENERAL

A. Construction:
   1. The work under Division 26 shall be performed in accordance with these specifications.
   2. Refer to the National Electrical Contractors Association's (NECA) National Electrical Installation Standards (NEIS) for Standard Practices for Good Workmanship in Electrical Contracting (NECA-1) as a minimum baseline of quality and workmanship for installing electrical products and systems that defines what is meant by "neat and workmanlike" as required by the National Electrical Code Section 110-12. Specified requirements supersede NECA practices.
   3. Electrical layout drawings are diagrammatic, unless otherwise detailed or dimensioned. The Contractor shall coordinate the location of electrical material or equipment with the work.
   4. Major electrical openings may compromise the structural integrity of the slab and wall elements. Major electrical openings are defined as openings or penetrations greater than two times the wall thickness in any dimension, and include duct bank transitions into a building through structural elements. Major electrical openings shall be constructed according to standard details on the drawings, up to an opening dimension of three feet. For opening dimensions greater than three feet, construct walls and slabs as specifically detailed on the drawings for that case. Major electrical openings proposed by the Contractor shall be submitted to the Structural Engineer of Record for the project for review.
   5. Minor changes in location of electrical material or equipment made prior to installation shall be made at no cost to the Owner.

6. Project will be plan checked, permitted, and inspected according to latest adopted edition of the City of Los Angeles Electrical Code and California Electrical Code.

B. Housekeeping:
1. Protect electrical equipment from dust, water and damage. Wipe motor control centers, switchgear, and buses free of dust and dirt, keep dry, and vacuum on the inside within 30 days of acceptance of the work.
2. Before final acceptance, the touch up any scratches on equipment as specified in Section 09 90 00.
3. Protect electrical equipment temporarily exposed to weather, debris, liquids, or damage during construction as specified in Section 01 61 00.

C. Electrical Equipment Labeling:
1. Provide electrical equipment with field marked signs and labeling to warn qualified persons of the potential electric arc flash hazards per NEC Article 110.16 Flash Protection.
2. Provide electrical equipment with NFPA 70E labels installed stating the results of the Arc Flash analysis specified in Section 26 05 74 Short Circuit and Protective Device Coordination Study Report.
3. Provide electrical distribution equipment and utilization equipment with field labels to identify the power source and the load as specified. Refer to NEC Article 110.22 for Identification of Disconnecting Means installation criteria. Specific information is required such as the equipment tag number and equipment description of both the power source and the load equipment.

D. Motor Connections: Verify that the motors are purchased with the correct size motor termination boxes for the circuit content specified as shown on the power single line diagrams or submit custom fabrication drawing indicating proposed motor termination box material, size, gasket, termination kit, grounding terminal, motor lead connection method, and motor terminal box connection/support system. Verify the motor termination box location prior to raceway rough-in.

3.02 TESTING

A. Provide testing in accordance with Section 26 08 00.

3.03 RECORD DOCUMENTS

A. Contract documents shall be maintained and annotated by the Contractor during construction, including the record drawings specified in Section 01 77 00.

END OF SECTION

THIS PAGE INTENTIONALLY LEFT BLANK

SECTION 26 05 19
LOW-VOLTAGE ELECTRICAL POWER CONDUCTORS AND CABLES

PART 1 GENERAL

1.01 DESCRIPTION

A. This section specifies stranded copper cables, conductors, and wire rated 600 volts insulation used for power; lighting, analog, digital, or pulse signals and control circuits.

B. This section specifies shielded multiconductor cable from VFD to motor.

1.02 REFERENCES

A. This section contains references to the following documents. They are a part of this section. In case of conflict between the requirements of this section and those of the listed documents, the requirements of this section shall prevail.

B. Unless otherwise specified, references to document shall mean the documents in effect at the time of Advertisement for bids or Invitation to Bid (or on the effective date of the Agreement if there were no Bids). If referenced documents have been discontinued by the issuing organization, references to those documents shall mean the replacement documents issued or otherwise identified by that organization or, if there are no replacement documents, the last version of the document before it was discontinued. Where document dates are given in the following listing, references to those documents shall mean the specific document version associated with that date, whether or not the document has been superseded by a version with a later date, discontinued or replaced.

Reference	Title
ASTM B3	Soft or Annealed Copper Wire
ASTM B8	Concentric-Lay-Stranded Copper Conductors, Hard, Medium-Hard, or Soft
ASTM B33	Tinned Soft or Annealed Copper Wire for Electrical Purposes
ICEA S-68-516	Ethylene-Propylene-Rubber-Insulated Wire
NEMA WC7	Cross-Linked-Thermosetting Insulated Wire and Cable for the Transmission and Distribution of Electric Energy
NFPA 70	National Electric Code (NEC)
UL 44	Rubber-Insulated Wires and Cables
UL 83	Thermoplastic-Insulated Wires and Cables

1.03 SUBMITTALS

A. The following information shall be provided in accordance with Section 01 33 00.
   1. Submittals specified in Section 26 05 00.
   2. Complete catalog cuts for all conductors, wire, and cable.

PART 2 PRODUCTS

2.01 GENERAL

A. Unscheduled Conductors and Cables:
   1. Where not specified on the Drawings, conductors and cables shall be sized in accordance with the National Electrical Code for the particular equipment served with the minimum size as specified herein. Unscheduled conductor with insulation shall be provided in accordance with the following:
      a. CABLESPEC "MEPR/CPE" multi-conductor power and control cable
      b. CABLESPEC “XHHW” for single conductors
      c. CABLESPEC “THWN” for indoor lighting and receptacles

B. Cable Specification Sheets (CABLESPEC): General requirements for conductors and cables specified in this Section are listed on CABLESPEC sheets in paragraph 3.06.

2.02 COLOR CODING

A. Control Conductors:
   1. Single-conductor control conductors shall have the following colors for the indicated voltage:

Control Conductor	120V
Power (AC)	Black
Control (AC)	Red
Neutral	White
Ground	Green
Foreign Voltage (DC)	Blue/White
Foreign Voltage (AC)	Yellow
Power (DC)	Blue
Control (DC)	Violet

B. Power Conductors:
   1. Power conductors shall have the following colors for the indicated voltage:

Power Conductor	480V	208/120V
Phase A	Brown	Black
Phase B	Orange	Red
Phase C	Yellow	Blue
Ground	Green	Green
Neutral	Gray	White

C. Cables may be black with colored 3/4-inch vinyl plastic tape applied at each cable termination and in pull boxes, handholes and manholes. Tape shall be wrapped with 25 percent overlay to provide 3 inches minimum coverage.

D. Signal Conductors: Signal cable conductors shall be color coded black and white for pairs or black, white, and red for triads. Each conductor and each group of conductors shall be numbered.

2.03 POWER AND CONTROL CONDUCTORS AND CABLE, 600 VOLT

A. Single Conductor: Provide stranded conductors for all cable or wires. Provide minimum conductor size of 12 AWG for power and lighting circuits and minimum conductor size of 14 AWG for control circuits.

B. Multiconductor Cable: Provide multiconductor power cable and multiconductor control cable where identified on the drawings. Provide multi-conductor cable designations as per the drawings Provide stranded conductors for all cable or wires.

2.04 SIGNAL CABLES

A. General:
   1. Factory cable between manufactured instrument system components shall be provided in compliance with the instrument manufacturer's recommendations.
   2. Signal cable shall be provided for instrument signal transmission. Single instrument cable (SIC) and multiple-circuit instrument cable (MIC) shall be provided in accordance with the following examples:
      a. CABLESPEC “SIC”:
         1) Cable designation:
            a) 1PR#16 STP shielded twisted pair
         2) Cable designation:
            a) 1TR#16 STT shielded twisted triad
      b. CABLESPEC “MIC":
         1) Cable designation example:
            a) 4PR#16 STP with individual shields for each of the four pair and an overall shield and jacket for the multiconductor instrument cable.

B. Communication, Paging, and Security System Cables: Voice communication, paging, and security system cables shall be specified in their respective specification sections.

2.05 PORTABLE CORD

A. Portable cord shall be provided in accordance with CABLESPEC "CORD," unless otherwise specified. Cords shall contain an equipment grounding conductor.

2.06 SPLICING AND TERMINATING MATERIALS

A. Connectors shall be tool applied compression type of correct size and UL listed for the

specific application. Connectors shall be tin-plated high conductivity copper. Wire nuts for a splice is prohibited.

B. Signal and control conductors shall be connected to terminal blocks and field devices and instruments shall be terminated with conductor terminals as specified in 2.10.

C. Connectors for wire sizes No. 8 AWG and larger shall be compression tool installed one-hole lugs up to size No. 3/0 AWG, and two-hole or four-hole lugs for size No. 4/0 and larger. Mechanical clamp, dimple, screw-type connectors are not acceptable. In-line splices and taps shall be used only by written consent of the Construction Manager.

D. Power conductor splices shall be compression type, made with a compression tool die approved for the purpose, as made by Thomas and Betts Corp., or equal. Splices shall be covered with electrical products designed for the application, insulated, and covered with a heat-shrinkable sleeve or boot, as specified elsewhere.

E. Motor connection kits shall consist of heat-shrinkable, polymeric insulating material over the connection area and high dielectric strength mastic to seal the ends against ingress of moisture and contamination. Motor connections may use the Tyco Electronics removable boot product line.

F. Motor connection kits shall accommodate a range of cable sizes for both in-line and stub-type configurations. Connection kits shall be independent of cable manufacturer's tolerances. Refer to the electric motor specification Section 43 05 21.

2.07 CORD GRIPS

A. Cord grips shall be provided where indicated on the Drawings to attach flexible cord to equipment enclosures. Cord grips shall consist of a threaded aluminum body and compression nut with a neoprene bushing and stainless steel wire mesh for strain relief. Cord grip shall provide a watertight seal at enclosure interface and sized to accommodate the flexible cord.

2.08 CONDUCTOR NUMBERING

A. Conductor Numbers:
   1. Identify conductors with numbers at both ends. Conductor tag numbers are the equipment number followed by a dash followed by the conductor number specified on the control diagram. Example:
      a. Equipment Tag number = 1900 - L1 where:
      b. 1900 = cable number
      c. L1 = conductor number
   2. Conductors in parallel or in series between equipment have the same conductor number. Neutral conductors s have the same conductor number. Wherever possible, the conductor number is the same as the equipment terminal to which it connects.

3. Where factory-wired equipment has terminal numbers different than the conductor numbers shown on the control diagrams:
   a. Show both on the interconnection diagram
   b. Include a copy of the interconnection diagram inside of the equipment cabinet.

2.09 WIRE MARKERS

A. Identify each power and control conductor at each terminal to which it is connected. Provide identification sleeves for conductors size No. 10 AWG or smaller. Use locking tab type cable markers for conductors No. 8 AWG and larger. Provide white plastic tabs with conductor identification number permanently embossed.

B. Identify conductors in accordance with paragraph 2.08 Conductor Numbering. Adhesive strips are not acceptable.

C. Machine print the letters and numbers that identify each wire on sleeves with permanent black ink with figures 1/8 inch high. Provide yellow or white tubing for sleeves sized to fit the conductor insulation. Shrink the sleeves with hot air after installation to fit the conductor.

2.10 TERMINAL BLOCKS

A. Unless otherwise specified, terminal blocks shall be panhead strap screw type. Terminals shall be provided with integral marking strips that permanently identify with the connecting wire numbers as shown on the drawings:
   1. Terminal blocks for P-circuits (power 208-600 volts)
      a. Rated not less than the conductor current rating
      b. Rated less than 600 volts AC.
   2. Terminal blocks for C-circuits and S-circuits:
      a. Rated not less than 20 amperes
      b. Rated less than 600 volts AC.
   3. Terminals shall be tin-plated.
   4. Insulating material shall be nylon.

PART 3 EXECUTION

3.01 GENERAL

A. Conductors shall be identified at each connection terminal, in pull boxes, manholes, handholes and at splice points. The identification marking system shall comply with Section 26 05 00.

B. Pulling wire and cable into conduit or trays shall be completed without damaging or putting undue stress on the insulation or jacket. Manufacture recommended and UL Listed pulling compounds are acceptable lubricants for pulling wire and cable. Grease is not acceptable.

C. Raceway construction shall be complete, cleaned, and protected from the weather

before cable is installed. Where wire or cable exits a raceway, a wire or cable support shall be provided.

D. Provide tin-plated bus bar. Scratch-brush the contact areas and tin plate the connection where flat bus bar connections are made with un-plated bar. Bolts shall be torqued to the bus manufacturer's recommendations.

3.02 600 VOLT CONDUCTOR AND CABLE

A. Conductors in panels and electrical equipment shall be bundled and laced at intervals not greater than 6 inches, spread into trees and connected to their respective terminals. Lacing shall be made up with plastic cable ties. Cable ties shall be tensioned and cut off by using a tool specifically designed for the purpose such as a Panduit GS2B. Other methods of cutting cable ties are unacceptable.

B. Conductors crossing hinges shall be bundled into groups not exceeding 10 to 15 conductors and protected using nylon spiral flexible covers to protect conductors. Provide oversized plastic panel wiring duct within panels and panelboards.

C. Slack shall be provided in junction and pull boxes, handholes and manholes. Slack shall be sufficient to allow cables or conductors to be routed along the walls. Amount of slack shall be equal to largest dimension of the enclosure. Provide dedicated electrical wireways and insulated cable holders mounted on unistrut in manholes and handholes.

D. Raceway fill limitations shall be as defined by NEC and the following:
   1. Lighting and receptacle circuits may be in the same conduit in accordance with de-rating requirements of the NEC. Lighting and receptacle circuits shall not be in conduits with power or control conductors. Signal conductors shall be in separate conduits from power and control conductors. Motor feeder circuits shall be in separate conduits including small fan circuit unless combination fan-light fixture.
   2. Power conductors derived from uninterruptible power supply systems shall not be installed in raceways with conductors of other systems. Install in separate raceways.
   3. Slices and terminations are subject to inspection by the Construction Manager prior to and after insulating.
   4. Motor terminations at 460-volt motors shall be made by bolt-connecting the lugged connectors.
   5. Splices and tees, where approved by the Construction Manager, shall be made with tubular compression connectors and insulated as specified for motor terminations within above ground water tight boxes.
   6. Terminations at solenoid valves, 120 volt motors, and other devices furnished with pigtail leads shall be made using self-insulating tubular compression connectors within the termination box.
   7. Terminations at valve and gate motor actuators shall be made directly into the actuator where possible. Power termination shall be made in the actuator power disconnect. Control and signal cable may be routed to a termination box near the

actuator on 20-ampere rated terminal strips with label identification for the control and signal conductors. Single wire control conductors and analog cable (SIC or MIC) then installed in flexible conduit to the actuator control and signal termination compartments.

8. Install and route multi-conductor as shown on the drawings. Submit installation and routing layouts of multi -conductor cables branching out to multiple field destinations to the Engineer for pre-approval. If approved, terminate on terminals in a terminal box located adjacent to the first field device served, or in the common junction boxlocated at the equipment as depicted on the motor feed standard detail Drawings. Make final connection to field devices with single conductors.

3.03 SIGNAL CABLE

A. Provide terminal blocks at instrument cable junctions within dedicated terminal boxes provided by the installer. Signal circuits shall be run without splices between instruments, terminal boxes, or panels.

B. Circuits shall not be made using conductors from different pairs or triads. Triads shall be used wherever 3-wire circuits are required.

C. Shields are not acceptable as a signal path, except for circuits operating at radio frequencies utilizing coaxial cables. Common ground return conductors for two or more circuits are not acceptable.

D. Unless otherwise specified, shields shall be bonded to the signal ground bus at the control panel only and isolated from ground at the field instrument or analyzer and at other locations. Shields or drain wires for spare circuits shall not be grounded at either end of the cable run. Terminals shall be provided for running signal leads and shield drain wires through junction boxes.

E. Spare circuits and the shield drain wire shall be terminated on terminal blocks at both ends of the cable run and be electrically continuous through terminal boxes.

F. Where instrument cable splicing is required, provide an instrument stand with terminal box rated for the area and environment and mounted approximately 3 feet above grade for instrument cable splices with the circuits and individual conductors provided with nameplate as specified in Section 26 05 00.

G. Cable for paging, security, voice communication, and telephone systems shall be installed and terminated in compliance with the manufacturers and the Utilities recommendations.

3.04 PORTABLE CORD

A. Portable power cords feeding permanent equipment, such as pendant cords feeding motors for pumps, cranes, hoists, and portable items shall have a wire mesh cord grip of flexible stainless steel wire to relieve the tension from the cable termination. Connection of portable cords to permanent wiring shall be accomplished with dedicated boxes and terminals blocks.

3.05 TESTING

A. Test conductors, wire, and cable in accordance with Section 26 08 00.

3.06 CABLE SPECIFICATION SHEETS (CABLESPEC)

A. General:
   1. Conductor, wire, and cable types for different locations, service conditions and raceway systems are specified on individual cable specification sheets. Scheduled and unscheduled conductors, wires, and cables shall be installed in accordance with the CABLESPEC Sheets.

B. CABLESPEC Sheets:
   1. The following CABLESPEC sheets are included in this section:

Type	Volt	Product	Purpose
DC1	600	4-PAIR, 23-AWG SHIELDED JACKETED PREMISE WIRE	DATA COMMUNICATION FAST ETHERNET: 100 BASE T CABLE, VIDEO, CCTV
DC2	30	RS-485: 24-AWG, JACKETED PREMISE WIRE	DATA COMMUNICATION REMOTE I/O CABLE
MIC	600	SP-OS: MULTIPLE PAIRS PR#16SH WITH OVERALL SHIELD AND JACKET	INSTRUMENT CABLE
SIC	600	P-OS: 1PR#16 STP or 1TR#16 STT	INSTRUMENT CABLE
THWN	600	PVC INSULATED WITH NYLON JACKET BUILDING GRADE CONDUCTOR	LIGHTS & RECEPTACLES
XHHW	600	XLP INSULATED INDUSTRIAL GRADE CONDUCTOR	POWER & CONTROL
CORD	600	HEAVY DUTY CABLE: SJOOW	PORTABLE ITEMS
TCX	300	THERMOCOUPLE EXTENSION CABLE	MATCH THERMOCOUPLE MATERIAL
COAX		RADIO FREQUENCY CO-AXIAL CABLE	DATA COMMUNICATIONS

3.07 CABLE SPECIFICATION SHEETS (CABLESPEC) – DC1

A. Cable System Identification:
   1. DC1

B. Description:
   1. Premise Cable: TIA/EIA-568-C.2 Category 6 Shielded and Bonded Twisted Pair; 4 pairs, #23 AWG Cable, overall 100% coverage aluminum foil shield

C. Voltage:
   1. 600 V RMS

D. Conductor Material:
   1. Solid Bare copper

E. Insulation Material:
   1. FRPO - Flame Retardant Polyolefin / FEP-Fluorinated Ethylene Propylene; Color Coded conductor insulation

F. Jacket:
   1. LS PVC - Low Smoke Polyvinyl Chloride with ripcord
      Trade Name Example: Flamarrest Sequential Footage
      Marking: every two feet Jacket Color: Blue

G. Manufacturer(s):
   1. Cooper Industries – Belden 7953T; or equal.

H. Execution:
   1. Applications:
      a. Gigabit Ethernet Data Communications LAN, CCTV Fixed. Component or Composite Video, Digital Video, RS-422,
   2. Installation:
      a. Install in accordance with associated equipment manufacturer's instruction.
   3. Testing:
      a. Test in accordance with paragraph 3.05.

3.08 CABLE SPECIFICATION SHEETS (CABLESPEC) – DC2

A. Cable System Identification:
   1. DC2

B. Description:
   1. Shielded Data Communication Cable; Remote I/O Cable: RS-485 #22 or #24 AWG Copper.

C. Voltage:
   1. 30 V RMS

D. Conductor Material:
   1. Tinned copper

E. Insulation:
   1. Polyethylene; Trade Name Example: Datalene

F. Jacket:
   1. PVC or CPE
   2. Color: Chrome

G. Manufacturer(s):

1. Cooper Industries-Belden YM-29560 or equal

H. Execution:
1. Application:
a. DCU or PLC to Remote I/O - Data Communications Cable.
2. Installation:
a. Install in accordance with associated equipment manufacturers instruction.
3. Testing:
a. Test in accordance with paragraph 3.05.

3.09 CABLE SPECIFICATION SHEETS (CABLESPEC) – MIC

A. Cable System Identification:
1. MIC

B. Description:
1. Multiple twisted, shielded pairs, 16 AWG, with overall shield instrumentation cable; Number of pairs as shown; UL listed, Cable Tray rated.

C. Voltage:
1. 600 volts

D. Conductor Material:
1. Bare annealed copper; Class-B stranded per ASTM B-8

E. Insulation:
1. 15 mil, Polyvinyl Chloride (PVC) with 4 mil nylon, 90 degree C temperature rated Color Code per ICEA Method-1: Pairs- Black and White with one conductor in each pair printed alpha-numerically for identification

F. Lay:
1. Twisted on a 2-inch lay

G. Shield:
1. 100 percent, 1.35 mil aluminum/polyester or mylar tape with 7-strand tinned copper drain wire

H. Overall Shield:
1. 2.35 mil aluminum-Mylar tape with 7-strand tinned copper drain wire

I. Jacket:
1. Flame-retardant, moisture and sunlight resistant 45 mil Polyvinyl Chloride (PVC)

J. Flame Resistance:
1. UL 1277 and UL 1581 vertical tray flame test

K. Manufacturer(s):
   1. Okonite, Okoseal-N type SP-OS (Shielded Pairs with Overall Shield); or Cooper Industries-Belden equal; or General Cable equal

L. Execution:
   1. Installation:
      a. Install in accordance with paragraph 3.03.
   2. Testing:
      a. Test in accordance with paragraph 3.05.

3.10 CABLE SPECIFICATION SHEETS (CABLESPEC) – SIC

A. Cable System Identification:
   1. SIC

B. Description:
   1. Single twisted, shielded pair or triad, 16 AWG, instrumentation and signal cable; UL listed; Cable Tray rated

C. Voltage:
   1. 600 volts

D. Conductor Material: Bare annealed copper; stranded per ASTM B8

E. Insulation:
   1. 15 mil, Polyvinyl Chloride (PVC) with 4 mil nylon, 90 degree C temperature rated; Color Code per ICEA Method-1: Pairs-Black and White with one conductor in each pair printed alpha-numerically for identification

F. Lay:
   1. Twisted on a 2-inch lay

G. Shield:
   1. 100 percent, 1.35 mil aluminum-Mylar tape with a 7-strand tinned copper drain wire

H. Jacket:
   1. 45 mil Polyvinyl Chloride (PVC)

I. Flame Resistance:
   1. UL 1277

J. Manufacturer(s):
   1. Okonite, Okoseal-N Type P-OS (Pair(s) Overall Shield) and Type TOS (Triad(s) Overall Shield); or Cooper Industries-Belden equal; or General Cable equal

K. Execution:

1. Use:
   a. Analog signal cable and RTD device Triad extension cable.
2. Installation:
   a. Install in accordance with paragraph 3.03.
3. Testing:
   a. Test in accordance with paragraph 3.05.

3.11 CABLE SPECIFICATION SHEETS (CABLESPEC) – THWN

A. Cable System Identification:
   1. THWN

B. Description:
   1. Single conductor lighting and receptacle.

C. Voltage:
   1. 600 volts

D. Conductor Material:
   1. Bare annealed copper; stranded per ASTM B8

E. Insulation:
   1. THWN/THHN, 90 degree C dry, 75 degree C wet,Polyvinyl Chloride (PVC) per UL 83.

F. Jacket:
   1. Nylon

G. Flame Resistance:
   1. UL 83

H. Manufacturer(s):
   1. Okonite, Okoseal-N, series 116-67-XXXX; or equal.

I. Uses Permitted:
   1. Lighting and receptacle circuits

J. Execution:
   1. Installation:
      a. Install in accordance with paragraph 3.02.
   2. Testing:
      a. Test in accordance with Section 26 05 00-3.02 and Section 26 08 00.

3.12 CABLE SPECIFICATION SHEETS (CABLESPEC) – XHHW

A. Cable System Identification:
   1. XHHW

B. Description:
   1. Industrial grade single conductor
   2. Sizes: 14 AWG through 750 kcmil as shown

C. Voltage:
   1. 600 volts

D. Conductor Material:
   1. Bare annealed copper; stranded per ASTM B8

E. Insulation:
   1. NEC Type XHHW-2; 90 degree C dry and C wet;
   2. Cross-Linked Polyethylene (XLP) per ICEA S-66-524 and UL-44;
   3. Color in sizes 14, 12 and 10 AWG: Black, Green, Yellow, White, Orange, Brown, Red, Blue

F. Jacket:
   1. None

G. Flame Resistance:
   1. UL 83

H. Manufacturer(s):
   1. Okonite, X-Olene; Cablec, Durasheath XLP; or equal.

I. Uses Permitted:
   1. Power, control, lighting and receptacle circuits.

J. Execution:
   1. Installation:
      a. Install in accordance with paragraph 3.02.
   2. Testing:
      a. Test in accordance with Section 26 05 00-3.02 and Section 26 08 00.

3.13 CABLE SPECIFICATION SHEETS (CABLESPEC) – CORD

A. Cable System Identification:
   1. CORD

B. Description:

1. Industrial Grade Flexible Portable Cord: Synthetic Rubber Insulation with Oil-Resistant Thermoset Jacket construction:
   a. Type SOOW for 600 Volt circuits; Type SJOOW for 300 Volt circuits

C. Voltage:
   1. 600 V RMS where shown or where unspecified: Type SOOW

D. Conductor Material:
   1. Flexible rope stranded annealed copper per ASTM B189 and B33.

E. Insulation:
   1. Ethylene propylene (EPR) per ICEA S-68-516 and rated for continuous operation at 90 degrees C.
   2. Green used for ground only
   3. Color:
      a. 2/C Black and White; 3/C Black, White, and Green; 4/C Black, White, Red and Green; 5/C Black, White, Red, Green, and Orange

F. Jacket:
   1. Heavy-duty Neoprene per ICEA S-68-516. Color: Yellow

G. Manufacturer(s):
   1. Okonite: Okocord; American Insulated Wire Cord equal; or Engineer accepted equal.

H. Execution:
   1. Installation:
      a. Install in accordance with paragraph 3.02.
   2. Testing:
      a. Test in accordance with paragraph 3.05.

3.14 CABLE SPECIFICATION SHEETS (CABLESPEC) – TCX

A. Cable System Identification:
   1. TCX

B. Description:
   1. Thermocouple Cable Extension:
      a. Type PLTC cable approved for cable tray installation; Per NEC Article 725.

C. Voltage:
   1. 300 volts

D. Conductor Material:
   1. Solid alloy, consistent with the type of thermocouple material specified.

E. Insulation:
   1. 15 mil, 90 degree C, flame-retardant polyvinylchloride (PVC) with 4 mil nylon cover.

F. Lay:
   1. Twisted on 2-inch lay.

G. Shield:
   1. 100 percent, 1.35 mil aluminum-Mylar tape.

H. Jacket:
   1. 45 mil nylon jacket.

I. Manufacturer(s):
   1. Okonite, P-OS type PLTC; or equal

J. Execution:
   1. Installation:
      a. Install in accordance with manufacturers instructions.
   2. Testing:
      a. Test in accordance with paragraph 3.05.

3.15 CABLE SPECIFICATION SHEETS (CABLESPEC) – COAX

A. Cable System Identification:
   1. COAX

B. Description:
   1. Premise Cable: Indoor Riser and Plenum with FRPE Jacket Outdoor /Watertight:
      a. Ductbanks Systems with PE Jacket Low Loss Flexible Communication Coaxial Cable

C. Voltage:
   1. 300 V; Voltage Withstand: 3000 Volts DC;

D. Conductor Material:
   1. Solid 18 AWG;
   2. Nominal Impedance: 50-ohm;
   3. Nominal Capacitance: 20 Pico-Farad per foot;
   4. Bend Radius: 2 inches

E. Insulation Material:
   1. Foam Polyethylene (PE) or Tetrafluoroethylene (TFE) UL Flame Test:
      a. NFPA-262 NEC Type Specification: CMP

F. Jacket:
   1. Polyethylene (PE), Fire Retardant Polyethylene (FRPE) or Fluorinated Ethylene Propylene (FEP)

G. Manufacturer(s):
   1. Times Microwave System: LMR-500;
   2. Belden Number 83242: 50-ohm Coax -- RG Type 142 B/U; or
   3. Engineer accepted equal.

H. Execution:
   1. Applications:
      a. Giga-Hertz Data Communications, CCTV Fixed.
      b. Component or Composite Video, Digital Video
   2. Installation:
      a. Install in accordance with associated equipment manufacturer's instruction. Provide male, female, TNC Male, UHF Male, straight, bulkhead, right-angle etc connectors, fittings, with crimp tools, dies, strip tools, deburr tools and cutting tools as required for the installation.
   3. Testing:
      a. Test in accordance with paragraph 3.05.

END OF SECTION

SECTION 26 05 26

GROUNDING AND BONDING FOR ELECTRICAL SYSTEMS

PART 1 GENERAL

1.01 DESCRIPTION

A. This section specifies the system for grounding electrical distribution and utilization equipment, including but not limited to cabinets, motor frames, manholes, instrumentation, metal surfaces of process/mechanical equipment that contain energized electrical components, metal structures and buildings, outdoor metal enclosures, fences and gates.

B. The Equipment Grounding Conductor shall ground or bond equipment, structures, or equipment frames to the Grounding Electrode System as defined in the National Electrical Code Article 250 and addressed herein.

C. The minimum size of the Equipment Grounding Conductors installed with the circuit conductors shall be per the National Electrical Code Table 250.122. The circuit grounding conductor size routed with a feeder or branch circuit conductors is as shown on the drawings.

1.02 REFERENCES

A. This section contains references to the following documents. They are a part of this section as specified and modified. Where a referenced document contains references to other standards, those documents are included as references under this section as if referenced directly. In the event of conflict between the requirements of this section and those of the listed documents, the requirements of this section shall prevail.

B. Unless otherwise specified, references to documents shall mean the documents in effect at the time of Advertisement for Bids or Invitation to Bid (or on the effective date of the Agreement if there were no Bids). If referenced documents have been discontinued by the issuing organization, references to those documents shall mean the replacement documents issued or otherwise identified by that organization or, if there are no replacement documents, the last version of the document before it was discontinued. Where document dates are given in the following listing, references to those documents shall mean the specific document version associated with that date, regardless of whether the document has been superseded by a version with a later date, discontinued or replaced.

Reference	Title
IEEE 81	Guide for Measuring Earth Resistivity, Ground Impedance, and Earth Surface Potentials of a Ground System
IEEE Std 81.2-1991	Guide to Measurement of Impedance and Safety Characteristics of Large, Extended or Interconnected Grounding Systems
NETA - ATS	InterNational Electrical Testing Association Inc. - Acceptance Testing Specifications
NFPA 70	National Electric Code (NEC) Article 250

1.03 SUBMITTALS

A. The following information shall be submitted for review in accordance with Section 01 33 00:

B. Product Literature: Marked product literature for ground rods, test wells, and equipment ground plate.

PART 2 PRODUCTS

2.01 GROUND CONDUCTORS

A. The System Ground Conductor shall be soft-drawn, bare annealed copper, concentric stranded, as specified. The minimum sizes shall be as follows, where American Wire Gage (AWG) conductor sizes are not shown or specified:

1. 5 and 15 kV switchgear	2/0 or 4/0 AWG
2. 5 kV motor starters	2/0 or 4/0 AWG
3. 15 kV-5 kV transformers	2/0 or 4/0 AWG
4. 5 kV-480V transformers	2/0 or 4/0 AWG
5. 480V switchgear	2/0 or 4/0 AWG
6. 480V switchboards	2/0 or 4/0 AWG
7. 480V MCC and	2/0 or 4/0 AWG
8. Cable tray	2/0 or 4/0 AWG
9. Large motors 250 hp & >	2/0 or 4/0 AWG
10. Ground Ring	4/0 AWG
11. Lighting & Power panels	2 AWG
12. Exposed metal cabinets	2 AWG
13. Electrical equipment	2 AWG
14. Buildings and enclosure	2 AWG
15. Fences and gates	2 AWG
16. Motors 25 hp to less than 250 hp	2 AWG
17. Motors 1 hp to less than 25 hp	6 AWG

2.02 GROUND RODS

A. Ground rods shall be copper covered steel, 3/4-inch diameter and 10-feet long. Rods shall have threaded type removable caps so that extension rods of same diameter and length may be added where necessary.

2.03 COMPRESSION CONNECTORS

A. Compression connections shall be irreversible, cast copper as manufactured by Thomas and Betts, or equal.

2.04 BOLTED CONNECTORS

A. Bolted connectors shall be Burndy, O. Z. Gedney, or equal.

2.05 WELDED CONNECTORS

A. Exothermic welding products shall be Erico's Cadweld Plus system with a remotely operated battery powered electronic ignition device and moisture resistant weld metal cup for the required mold, or equal.

2.06 TEST WELLS

A. Provide concrete test well with cover and connect the ground grid extension using a removable connector.

2.07 EQUIPMENT GROUND BARS

A. Copper equipment ground bars shall be Erico Eritech EGB Series or equal, sized as required for the installation.

2.08 GROUND ELECTRODE GROUNDING BARS

A. Ground electrode grounding bars shall be 1/4-inch thick copper electro-tin plating, Erico Eritech EGBA Series CC Pattern, Burndy Type BBB or equal. Minimum length shall be 12 inches.

B. Insulators (Stand Off) material shall be halogen-free, fiberglass-reinforced thermal set unsaturated polyester molded compound with indoor rating of 600 volts.

C. Brackets shall be 1/8-inch thick, Type 304 stainless steel.

D. Fasteners shall be 3/8-inch Type 304 stainless steel.

2.09 EQUIPMENT GROUND PLATE

A. Equipment ground plate shall be two-hole copper flush mounted grounding plate, Erico Cadweld, Burndy YGF Series, or equal.

2.10 PRODUCT DATA

A. Ground resistance readings specified in Part 3 below shall be provided in accordance with Section 01 33 00.

PART 3 EXECUTION

3.01 GENERAL

A. Grounding system shall be provided in compliance with the NFPA 70 National Electrical Code (NEC). Grounding conductor shall not be used as a system neutral.

B. Embedded and buried ground connections shall be made by compression connectors utilizing diamond or hexagon dies and a hand compression tool for wire sizes 2 AWG and smaller and a hydraulic pump and compression head for wire sizes 2/0 AWG and larger. Alternate method allowed: exothermic welding using a remote igniter device.

C. Tools and dies shall be approved for this purpose; dimple compressions are not acceptable. Compression connections shall be prepared in accordance with the manufacturer's instructions. Compression-type lugs shall be used in accordance with manufacturer's recommendations. Exposed ground connections to equipment shall be made by bolted clamps unless otherwise specified. No solder material shall be used in any part of the ground circuits.

D. Embedded ground conductors and fittings shall be securely attached to concrete reinforcing steel with tie wires and prevented from displacement during concrete placement.

E. Notify the Construction Manager two hours prior to backfilling, as each part of the grounding system installed below finished grade is complete and ready for inspection. Non-compliance shall affect the payment schedule for this work.

F. Grounding conductors extended beyond concrete surfaces for equipment connection shall be extended a sufficient length to reach the final connection point without splicing. Provide grounding fittings, pads, or plates as shown in the electrical details. Minimum grounding conductor extension shall be 3-feet.

G. Grounding conductors which project from a concrete surface shall be located as close as possible to a corner of the equipment pad, protected by rigid conduit bonded to the grounding conductors, or terminated in a flush grounding plate.

H. Exposed grounding conductors shall be supported by noncorrosive metallic hardware at 4-foot intervals or less. Grounding conductors for shown and future equipment shall be terminated using an equipment grounding plate.

I. Ground conductors entering electrical enclosures shall be bonded to a single ground bus or terminal strip in the enclosure and to metallic raceways within or terminating at the enclosure. Direct ground connections to enclosure chassis or back plate are not acceptable. Prior to making ground connections or bonds, the metal surface at the point of connection shall be cleaned.

J. Lightning arresters shall be directly connected to the ground grid system using lightning industry braided copper conductors, sized as specified.

K. Metallic sheaths or shields of shielded power cable shall be terminated by a copper ground bus provided with cable connection for connection to the grounding system.

3.02 RACEWAY GROUND

A. All service, feeder and branch circuit raceways shall contain a green insulated ground conductor sized per applicable NFPA 70 National Electrical Code (NEC) tables:

1. T250.66 - Grounding Electrode Conductor for Alternating - Current Systems or

2. T250.122 - Minimum Size Equipment Grounding Conductors for Grounding Raceways and Equipment.

B. Metallic conduits terminating at concentric knock-outs or reducing washers shall be bonded using insulated grounding bushings. Grounding bushings shall be connected to the grounding system using conductors sized in compliance with NEC.

C. Cable trays shall have 2/0 or 4/0 bare copper ground conductor run on the outside of each tray or tray group of tiered cable tray. Conductor shall be connected to each section or fitting using an approved ground-clamp and supported at 5 foot intervals.

3.03 EQUIPMENT AND ENCLOSURE BONDING

A. Electrical distribution and utilization equipment enclosure ground bus, motor frames, manholes, metal structures and buildings, outdoor metal enclosures, fences and gates shall be bonded to the grounding system with conductor sizes as specified.

B. Connect the conductor to the metal enclosure using a UL listed connector, where the enclosure does not contain an internal ground bus

C. Non-electrical equipment with metallic enclosures, that are located outdoors and without a cover or a shade, shall be connected to the grounding system.

3.04 ISOLATED GROUNDING

A. An isolated ground system shall be installed where required by an equipment manufacturer. The isolated ground conductor shall have green insulation with a yellow stripe and shall be run in the same raceway as the power and neutral conductors. The isolated ground bus shall be kept isolated from neutral and grounding buses.

B. Where specifically directed by the Engineer and required by an equipment manufacturer, the Contractor shall provide an additional isolated ground conductor from the service or separately derived system to an isolated ground bus bar at each associated distribution point.

3.05 SERVICE AND SEPARATELY DERIVED SYSTEM BONDING

A. A neutral bonding jumper shall be installed in only one location for each service or separately derived system. The bonding jumper shall be located at the service source or the first immediate distribution point downstream from the source. The neutral and ground buses shall be kept isolated from each other accept where the bonding jumper is installed.

3.06 GROUNDING SYSTEM TESTS

A. The Contractor shall test the facility grounding system and the building grounding system to determine the ground resistance. The grounding test shall be IEEE Standard 81 using the NETA Fall-of-Potential procedure. A plot of ground resistance readings for each isolated ground rod, ground mat, or ground bus shall be

submitted on 8-1/2 x 11 inch size graph paper. Point-to-point resistance measurements are not acceptable.

B. The current reference rod shall be driven at least 100 feet from the ground rod or grid under test or as recommended by IEEE Standard 81. The measurements shall be made at 10-foot intervals beginning 25 feet from the test electrode and ending 75 feet from it, in direct line between the ground rod or center of grid and the current reference electrode.

C. A grounding system that shows greater than 2 ohm resistance for the flat portion of the plotted data shall be considered inadequately grounded.

D. The Contractor shall add additional parallel connected ground rods and/or deeper driven rods until the ground resistance measurements meet the 2 ohm requirement. Additional ground rods will be paid for as extra work where the required numbers exceed that specified when authorized and approved by the Construction Manager.

E. Use of salts, water, or compounds to attain the specified ground resistance is not acceptable.

END OF SECTION

SECTION 26 05 33
RACEWAYS AND BOXES FOR ELECTRICAL SYSTEMS

PART 1 GENERAL

1.01 SCOPE

A. This section covers the furnishing and installation of electrical conduits, wireways, pull boxes, manholes, handholes, cable trays, fittings and supports.

B. Raceways shall be provided for lighting, receptacles, power, control, instrumentation, signaling and grounding systems.

1.02 REFERENCES

A. This section contains references to the following documents. They are a part of this section as specified and modified. Where a referenced document contains references to other standards, those documents are included as references under this section as if referenced directly. In the event of conflict between the requirements of this section and those of the listed documents, the requirements of this section shall prevail.

B. Unless otherwise specified, references to documents shall mean the documents in effect at the time of Advertisement for Bids or Invitation to Bid (or on the effective date of the Agreement if there were no Bids). If referenced documents have been discontinued by the issuing organization, references to those documents shall mean the replacement documents issued or otherwise identified by that organization or, if there are no replacement documents, the last version of the document before it was discontinued. Where document dates are given in the following listing, references to those documents shall mean the specific document version associated with that date, regardless of whether the document has been superseded by a version with a later date, discontinued or replaced.

Reference	Title
ANSI C80.1	Rigid Steel Conduit-Zinc Coated
ANSI C80.3	Electrical Metallic Tubing-Zinc Coated
ASTM F512	Smooth-Wall Polyvinylchloride Conduit and Fittings for Underground Installation
FEDSPEC WW-C-581E	Conduit, Metal, Rigid and Intermediate; and Coupling, Elbow, and Nipple, Electrical Conduit; Zinc Coated
FEDSPEC W-C-1094A	Conduit and Conduit Fittings, Plastic, Rigid
JIC EMP-1	Electrical Standards for Mass Production Equipment
NEMA ICS 6	Industrial Control and Systems Enclosures
NEMA TC2	Electrical Plastic Tubing (EPT) and Conduit (EPC 40 and EPC 80)
NEMA TC6	PVC and ABS Plastic Utilities Duct for Underground Installation
NEMA VE1	Cable Tray Systems
NEMA 250	Enclosures for Electrical Equipment (1000 volts maximum)

Reference	Title
NFPA 70	National Electrical Code (NEC)
NFPA 79	Electrical Standards for Industrial Machinery
CBC	California Building Code
LAEC	City of Los Angeles Electrical Code
UL 1	Flexible Metal Electrical Conduit
UL 6	Rigid Metal Electrical Conduit
UL 360	Liquid Tight Flexible Electrical Conduit
UL 514	Nonmetallic Outlet Boxes, Flush-Device Boxes and Covers
UL 651	Rigid Nonmetal Electrical Conduit
UL 797	Electrical Metallic Tubing
UL 870	Wireways, Auxiliary Gutters, and Associated Fittings
UL 884	Underfloor Raceways and Fittings
UL 886	Outlet Boxes and Fittings for Hazardous (Classified) Locations

1.03 SUBMITTALS

A. The following information shall be provided in accordance with Section 01 33 00:

B. Products:
   1. Manufacturer's descriptive literature for materials.
   2. Certification that Contractor has been trained to work on PVC-coated conduit systems.

C. Underground Conduit Raceway System:
   1. The Contractor shall provide detailed layout drawings or sketches for the underground conduit raceway systems. Make take-offs of the circuits and underground raceways required between electrical power and control equipment, process equipment, instrumentation, area lighting, receptacles, heat tracing, and eye-wash stations to assure all circuit are included prior to system construction.
   2. Drawings shall show plan view routing, pullboxes and manholes, consideration of other underground systems and structures, approximate system cover depths and widths, and section views showing sizes of conduits and circuits. Submit the underground conduit raceway systems drawings or sketches.

D. Cable pulling calculations shall be submitted to the Engineer for all MV cable runs.
   1. Training certifications for each person who will be installing PVC-coated conduit and fittings in accordance with paragraph entitled “Quality Assurance” of this Specifications section.

PART 2 PRODUCTS

2.01 RACEWAYS AND FITTINGS

A. General requirements for raceway materials specified in this section are listed in the RACESPECS sheets at the end of this section. The type of raceways and raceway fittings to be used for any given area and application shall conform to the requirements in this section.

2.02 BOXES, GUTTERS, TERMINAL CABINETS, MANHOLES, AND HANDHOLES

A. Materials and classifications of equipment and material is specified in Section 26 05 00

B. Pull Boxes And Wiring Gutters: Indoor boxes and enclosures larger than FD boxes shall be constructed of sheet steel and galvanized after fabrication. Outdoor boxes and enclosures shall be provided with neoprene gaskets on the hinged doors and removable covers. Box and gutter sizes, metal thickness, and grounding shall comply with the National Electrical Code. Bolt-on junction box covers 3 feet square or larger, or heavier than 25 pounds, shall have a rigid handle. Covers larger than 3 x 4 feet shall be split.

C. Terminal Cabinets:
   1. Terminal cabinets shall be provided with adjustable terminal strip mounting, back-panels for equipment mounting, print pockets in the doors, continuous door hinges, and three-point lockable latches.
   2. Classifications, ratings and enclosure material is specified in 01 61 40 and 26 05 00.

D. Manholes:
   1. Unless otherwise specified, manholes shall be precast concrete, 3000 psi strength at 28 days, with reinforcing with the manhole cover designed for H 20 bridge loading. Necking and shaft shall have 36 inch minimum clear opening.
   2. Manhole dimensions shall be as shown on the drawings and where not shown shall be sized in accordance with the NEC. Manhole cover and frame shall be Class 30B gray cast iron per ASTM A48 with machine finished flat bearing surfaces. Manhole covers shall be engraved " ELECTRICAL – LOW VOLTAGE". 2. “ELECTRICAL – MEDIUM VOLTAGE". 3. “SIGNAL/COMMUNICATIONS". " as appropriate.
   3. Manholes shall be watertight. Exterior walls of manholes shall be provided with 6 mils of waterproof membrane, Sonneborn HLM 5000 Series, or approved equal. Manhole walls shall be provided with boxouts with waterstops on all sides of each boxout. Waterstops shall be as specified in the Cast-in-Place Concrete section.
   4. Raceway duct entries shall be no less than 14 inches above floor and below ceiling. Raceway boxouts shall be sized to accommodate the penetrating underground duct banks. Raceways bell-ends shall be flush with the interior finished manhole wall. From each duct bank entry into the manhole, the continuous duct bank bare copper grounding conductor shall be supported and routed around the interior manhole walls and bonded together.

5. Floor shall slope to a sump pit with dimensions shown in the manhole detail or with a minimum of 18 inch length x 18 inch width x 12 inches depth.

E. Handholes:
1. Handholes shall be precast concrete with checker plate, galvanized, traffic covers designed for H 20 loading. Handholes shall be provided with precast solid concrete slab bottoms with sumps. Handholes shall be constructed of 3000 psi reinforced concrete. Handhole cover shall be engraved "ELECTRICAL" or "SIGNAL" as applicable.
2. Dimensions shall be as specified on the drawings. Handhole walls shall be provided with boxouts, as specified for manholes.

F. Manhole And Handhole Cable Supports: Provide heavy-duty, non-metal cable racks for support of conductors. Racks shall be UL listed glass-reinforced nylon consisting of slotted wall brackets for support arms designed for a minimum of a 400-pound load. Each support bracket shall from the top to the bottom and the arms shall be adjustable and installed on 24-inch centers. Use ½-inch stainless steel bolts, hardware, inserts, and fasteners. Cables supports, clamps or racks shall be provided to support the cable at minimum 2-foot intervals. Concrete inserts shall be embedded on 24-inch centers in walls and ceiling.
1. Cable Support Products:
   a. Underground Devices Incorporated Type RA arms with CR36 support brackets.
   b. Unistrut Power-Rack F20N-STA33 Stanchions with F20N-ARM14 Arms.
   c. Or approved equal

G. Ground Bus:
1. Provide a ground bus in concrete manholes, handholes, and electrical pullboxes with dimension of 3-foot width x 3-foot length x 3-foot depth and larger. Provide a NEMA threaded 4-hole grounding plate for connecting two to four-1-hole ground connectors that enter the enclosure from two to four duct banks. From each duct bank entry into the manhole, the continuous duct bank bare copper grounding conductor shall be supported and routed around the interior manhole walls and bonded together or to a ground bus
   a. Products:
      1) Burndy, T&B, or approved equal.

2.03 RACEWAY SUPPORTS

A. Conduit Supports:
1. Framing channel with end caps and straps shall be provided to support groups of conduitIndividual conduit supports shall be one-hole pipe straps used with clamp backs and nesting backs where required
2. Conduit supports shall be one-hole clamps or oversized clamps with clamp backs and nesting backs where required .
3. Fiberglass spray sealant shall be applied to all field cuts made to fiberglass framing channel.

B. Ceiling Hangers:
   1. Ceiling hangers shall be adjustable. Provide J-Type conduit support for single conduit. Straps or hangers of plumber's perforated tape are not acceptable. Unless otherwise shown, hanger rods shall meet ASTM A193 and be sized as 3/8-inch up to 2-inch conduit and shall be 1/2 inch all-thread rod over 2-inch conduit. .
   2. Ceiling hangers for fiberglass framing channel shall be 1/2 inch fiberglass reinforced plastic threaded rod hangers with FRP fasteners.

C. Suspended Raceway Supports and Racks:
   1. Suspended raceway supports shall consist of concrete inserts, rod hangers, and jamb nuts supporting framing channel or lay-in pipe hangers as required. Framing channel shall be a minimum of 12-gauge.
   2. Hanger rods supporting fiberglass framing channel shall be 1/2 inch fiberglass reinforced plastic with FRP or nylon jamb nuts.
   3. Hanger rods shall be 1/2-inch diameter all-thread rod and shall meet ASTM A193. Suspended raceway supports and racks shall be braced for seismic forces as specified in Section 26 05 00.

D. Materials: Mounting and supporting material and ratings are specified in Section 26 05 00

2.04 CONCRETE ENCASED DUCT BANKS

A. Concrete used for duct banks shall be as specified in the Cast-in-Place Concrete Section 03 30 00.

2.05 UNDERGROUND MARKING TAPE

A. Underground detectable marking tape similar to Section 800-3.2.2.3 of 2021 Whietbook and City Standard Drawings referenced therin shall be provided for early warning protection of digging around direct buried cables, conduits, and concrete duct banks.

B. Marking Tape Example: tape example: Low density polyethylene plastic, nominally 6 inches wide and 4 mil thickness with metallic lined tape with red polyethylene film on top and clear polyethylene film on the bottom. Tape shall be imprinted with a warning continuously along the length similar to: "CAUTION - STOP DIGGING - BURIED ELECTRIC LINE BELOW."

C. Tape Products: Brady "Identoline"; Services and Materials "Buried Underground Tape"; Somerset (Thomas & Betts) "Protect-A-Line"; or approved equal.

2.06 NAMEPLATES

A. Nameplates are specified in Section 26 05 00

2.07 FIRESTOPS

A. Firestops and seals shall be Flamemastic 77, Vimasco No. 1-A, or approved equal, and shall be applied in accordance with manufacturer's recommendations. Products which are affected by water are not acceptable.

2.08 RACEWAY IDENTIFICATION

A. Provide raceway numbering as specified in Section 3.06.

B. Raceway number tags:
   1. Solid brass with 0.036-inch minimum thickness.
   2. Raceway number stamped in 3/16-inch minimum height characters
   3. Attached to the raceway with 316 stainless steel wire.

2.09 ELECTRICAL SEALANT

A. Electrical sealant putty shall be non-hardening, non-oxidizing, non-corrosive, non-poisonous, and non-injurious to human skin with service temperature range of 30 to 200 degrees Fahrenheit. Product shall be used to seal against the entrance of water.

2.10 HAZARDOUS AREA AND CORROSIVE AREA CONDUIT SEALS

A. Sealing compound shall be non-hardening type for corrosive areas. Seal fittings for conduit systems in hazardous atmosphere locations shall be hot-dip galvanized cast ferrous alloy or aluminum alloy. Seal fittings shall be 40-percent fill type.

B. Sealing compound shall be hard type installed in UL listed for explosion-proof sealing fittings after the conductors are installed, tested, and accepted.

C. Provide PVC-coated seal fittings used for PVC-coated conduit with 40-mil factory coating. Seal fitting and sealing compound manufacture: Appleton, Crouse-Hinds, or approved equal.

2.11 PULLING LINE

A. Pulling line shall be polyethylene type, mildew and rot resistant with minimum of 200-pound tensile strength and minimum 1/4-inch diameter. Install in all “future” or “spare” raceways. Manufacture: Greenlee, Ideal, or approved equal.

2.12 CONDUIT THREAD LUBRICANT

A. Thread lubricant shall be conductive with anti-seize and anti-corrosion properties, compatible with steel and aluminum conduit materials. Manufacture: T&B CP8 KOPR-Shield; Robroy Threadcompound; or approved equal.

2.13 TERMINAL BLOCKS

A. Terminal blocks are specified in Section 26 05 19.

PART 3 EXECUTION

3.01 GENERAL

A. Refer to Sections 01 61 45 and 26 05 00 for identification of hazardous and corrosive areas.

B. Table A specifies the type of raceway required for each location and application by RACESPEC sheet. Unscheduled conduit shall be galvanized, rigid steel, RACESPEC type GRS.

Table A

Location	Application/Condition	RACESPEC
Indoor noncorrosive	Exposed	GRS
Indoor corrosive	Exposed	PGRS
Outdoor	Exposed (WWTP)	PGRS
Concealed	Power circuits embedded in concrete structure or beneath slab-on-grade	PVC4
Concealed	Instrumentation, communications and data signals encased in concrete, duct bank	PVC4
Underground	Power circuits encased in concrete, duct bank	PVC4
Underground	Instrumentation, communications and data signals directly buried	PVC4
Nonhazardous	Final connection to equipment and light fixtures	LFS
Hazardous corrosive	Exposed	PGRS
Hazardous	Final connection to equipment	XPFS
Architecturally finished areas	Concealed in framed walls and ceiling spaces (lighting and receptacle circuits only)	EMT
Architecturally finished areas	Final connection to light fixtures	FLEX

3.02 CONDUIT

A. General: The conduit systems, installation, and hazardous location fittings are specified herein.

B. Indoor and Outdoor Conduit Systems:
   1. In general, Contractor shall be responsible for determining conduit routing that conforms to the specified installation requirements:
      a. Conduits for lighting and outlets: concealed when possible or exposed
      b. Conduits for process equipment: concealed when possible or exposed
      c. Conduit inside structures: concealed when possible or exposed
      d. Conduit concealed inside water chambers slabs and walls

2. Conduit installation shall conform to the requirements of the RACESPEC sheets and the following specified installation requirements:
   a. Install exposed conduit parallel or perpendicular to structural members and surfaces. Install conduit horizontally and allow minimum headroom of 7 feet.
   b. Route two or more exposed conduits in the same general routing parallel with symmetrical bends.
   c. Space exposed conduit installed on supports not more than 10 feet apart. Space multiple conduits in parallel and use framing channel.
   d. Comply with the requirements herein, where conduits are suspended from the ceiling.
   e. Secure conduit rack supports to concrete walls and ceilings with cast-in-place anchors or framing channel concrete inserts.
   f. Install conduits at least 6 inches from high temperature piping, ducts, and flues with temperatures higher than 90 degree C.
   g. Install conduits between the reinforcing steel in walls or slabs that have reinforcing in both faces.
   h. Place conduits under the reinforcement in slabs with only a single layer of reinforcing steel. Separation between conduits, conduits and reinforcement, and conduits and surfaces of concrete shall be maintained in accordance with UBC.
   i. Route conduit clear of structural openings and indicated future openings.
   j. Provide conduits with flashed and watertight seals routed through roofs or metal walls.
   k. Grout conduits into openings cut into concrete and masonry structures.
   l. Cap conduits or plug flush conduits during construction to prevent entrance of dirt, trash, and water. Cap or plug empty conduits designated as “future”, “spare”, or “empty” and include a pulling line accessible at both ends. Use anti-seize compound on cap and plug threads prior to installation.
   m. Determine concealed conduit stubup locations from the manufacturer's shop drawings. Terminate concealed conduit for future use in specified equipment.
   n. Install conduit flush with structural surfaces with galvanized couplings and plugs. Caps and plugs shall match the conduit system.
   o. Provide concealed portions of conduits for future equipment where the drawings indicate future equipment. Match the existing installation for duplicate equipment.
   p. Terminate conduits that enter enclosures with fittings that match the NEMA rating of the enclosure.
   q. Underground metallic or nonmetallic conduit that turn out of concrete, masonry or earth: Install a 90-degree elbow of PVC-coated rigid steel conduit before emergence above ground.
   r. Provide O-Z Gedney "Type DX" or Crouse-Hinds "Type XD" or approved equal bonded, weathertight expansion and deflection fitting for the conduit size where conduit across structural joints that allows structural movement.

C. Underground Conduit System:

1. Excavation, backfilling, and concrete work shall conform to respective sections of these specifications. Underground conduit shall conform to the following requirements:
   a. Underground conduits under roadways or traffic areas that are not shown otherwise on the drawings shall be reinforced concrete encased.
   b. Concrete encased conduit shall have minimum concrete thicknesses of 2 inches between conduits, 1 inch between conduit and reinforcing, and 3 inches between reinforcing and earth, unless shown otherwise in an electrical detail.
   c. Concrete encasement on exposed outdoor conduit risers shall continue to 3 inches above grade, with top crowned and edges chamfered.
   d. Underground conduit bend radius shall be not less than 2 feet minimum at vertical risers and shall be not less than 3 feet elsewhere.
   e. Where conduit and concrete encasement are terminated underground, the conduit and reinforcing shall both extend at least 2 feet past the concrete. Conduits shall be capped and threads protected. Steel surfaces shall be given two coats of epoxy paint.
   f. Underground conduits and conduit banks shall have 2 feet minimum earth cover unless otherwise shown.
   g. Underground conduit banks through building walls shall be cast-in-place or installed with concrete into boxouts with waterstops on all sides of the boxout. Water-stops shall be as specified in the Cast-in-Place Concrete section. Extend the horizontal reinforcement from the duct bank into the boxout terminating with J-hook bends.
   h. Conduits not encased in concrete and passing through walls with one side in contact with earth shall be sealed watertight with special rubber gasketed sleeve and joint assemblies or with sleeves and modular rubber sealing elements.
   i. Thoroughly swab conduits and raceways on the inside, immediately upon completion of pouring concrete.
   j. Label raceways in accordance with 2.08 and 3.05.
   k. After the concrete has set and before backfilling, pull a mandrel through each conduit. The mandrel shall have a diameter equal to the nominal conduit inside diameter minus 1/2 inch and shall not be less than 4 inches long.
   l. If the mandrel showed signs of protrusions on the inside of the conduit, the conduit shall be repaired or replaced.
   m. Provide manufactured plastic conduit spacers anchored to prevent movement during the concrete pour. Manufacture: Carlon, PW Pipe, Underground Devices, or approved equal.
   n. Backfill duct banks with clean fill compacted to 90 percent in 6-inch lifts after concrete has cured. Refer to Section 03 30 00 for concrete requirements including minimum 7 days of cure time prior to backfill over duct banks.
   o. Allow and provide for two offsets per conduit and raceway for each 100 linear feet to account for unexpected field conditions including for excavation and backfill limited to three feet of extra width and/or depth. Include these specified provisions in the bid price.

p. Provide PVC threaded adapter with female threads where PVC conduit is joined to steel conduit.

q. Procedure:

1) Before assembly: Double coat steel conduit with Red-Robroy, Green-Permacote, Blue-Ocal or approved equal product.

2) After assembly: Seal with 65-mil thick, 2-inch wide mastic sealing tape to 1/2 inch beyond threads. Procucts: 3M Scotch 2228; Plymouth 02625; or approved equal.

3) Cover with 20-mil corrosion protection tape applied in ½-lap layers to 2 inch beyond threads. Products: 3M Scotchwrap 51; Plymouth Plywrap 12; or approved equal.

r. Where reinforced concrete duct banks enter the side of a building, manhole, or handhole and the reinforcement cannot be brought into a window and be terminated, then drill the structure and embed the reinforcement in epoxy to minimum of 3-inches depth.

s. Provide conduit with bell ends where duct banks terminated at walls, manholes, or handholes. Install bell ends flush with finished concrete.

t. Provide conduit with bell ends where conduit rise below grade into a floor mounted electrical panel, electrical cabinet, MCC, switchboard, or switchgear.

u. Separate power conduits from signal conduit within the same ductbank by 12 inches or greater separation, as shown. Refer to the drawings or schedules for signal to be installed in metal conduits instead of PVC ducts.

v. Separate high voltage ductbanks from low voltage ductbanks, as shown.

w. Provide wireways for transition from underslab conduits rising into wall-mounted panels where the number of conduits exceed the NEC allowable panel space in the bottom of the panel. Provide conduit sleeves or fitting for panel transition. Continuous thread or all-thread is prohibited.

D. Conduit In Block Walls

1. Install multiple runs of conduit that stub-up into a block wall and connect to recessed electrical panels with adequate space for the conduit. Coordinated the electrical work with the structural work and block installers to provide a chase to install the conduit. Install conduit in the cells that do not contain structural reinforcement. Install conduits in the center of the cell to avoid affecting the structural integrity of the wall.

2. Avoid conduit and electrical boxes installation that blocks the cell from being grouted or that blocks the cell reinforcing bars from being grouted. Avoid conduit in the first cell adjacent to doors, windows, corners and wall intersections and install conduits in the center of the first available cell a minimum of 1’-0” from the edge of these openings.

3. Where solid grouting of masonry walls is specified, install conduit and electrical boxes so as to provide sufficient space for grout to flow pass the boxes and conduit in order to fully fill the space beneath and behind. Where boxes need to be held in place, secure the boxes from the face of the block wall. Do not place items behind or next to electrical boxes to hold in place.

4. Coordinate split-face, slump and scored block installation with the masonry contractor to supply smooth face block at the location of receptacles and switches so that the device covers install flush to the wall. Install translucent weather-proof sealing material under device covers on outdoor or wet area locations.

E. Conduit Seal-Off Fittings:
1. Conduits passing:
   a. Between Class I, Division 1 area and Class I, Division 2 area; provide sealing fittings located at the boundary in accordance with NEC Article-500.
   b. From hazardous or corrosive area into a non-hazardous or non-corrosive area.
2. Install the seal-off material in the conduit seal-off fittings after inspection.

F. Conduit And Innerduct Sealing Material:
1. Provide HYDRA-SEAL® Handi-Polyurethane-Foam or approved equal product to seal conduits and innerducts.
2. Sealing product required features:
   a. Compatible with common cable jacket materials.
   b. ASTM E-84 flame spread requirements and UL Classified.
   c. Pre-pressurized, portable, one-component closed-cell foam sealing system.
   d. Dries tack-free within 15 minutes and cures within 24 hours.
   e. Reacts with applied moisture or with ambient humidity.
   f. Remove over-spray with acetone and remove cured foam mechanically
3. Application Criteria:
   a. Apply in ambient temperatures between 60 and 100 degrees Fahrenheit.
   b. Apply bead onto clean surface.

G. Conduits in Concrete Construction:
1. Conduits for power, control and instrumentation may be embedded in and pass through concrete construction subject to the limitations in this paragraph. Where concrete strength or serviceability requirements prevent the direct embedment of conduit, provide adequate support, bracing, and serviceability details:
   a. Do not impair significantly concrete strength by the embedment of conduits in or through structural sections.
   b. Provide conduit layout to the requirements of ACI 318, Sections 3.3 – Aggregates and 6.3 – Conduits and Pipes Embedded in Concrete.
   c. Treat conduits similarly to reinforcing steel for purposes of clearance. In general, code sections require conduit spacing the greater of:
   d. 1.33 times the maximum concrete aggregate size, clear
      1) Three diameters center to center
      2) Alternate spacing and layout shall be as reviewed and accepted by the Engineer.
2. Conduit and raceway penetrations through walls and slabs where:
   a. one side is a conditioned or an occupied space and the other side not, or
   b. one side has liquid or groundwater contact and the other not,

c. be detailed and constructed to prevent liquid and moisture penetration through the wall or slab section for each conduit.

3.03 MANHOLES AND HANDHOLES

A. Unless otherwise specified, manhole and handhole installation shall be as follows:
   1. Manholes, handholes, and pull boxes shall be set on a minimum of 6 inches of crushed rock on top of undisturbed or compacted earth.
   2. Manholes and handholes shall be set plumb so that water shall drain to the sump.
   3. Manhole covers shall be 36-inches in diameter and set at 2 inches above finish grade with surrounding pavement sloping away from the manhole cover.
   4. Metallic hardware inside manholes and handholes shall be bonded to the ground plate or ground bus using bolted connections, bonding jumpers and grounding bushings.

B. CABLE RACKS: Cable rack assemblies shall be installed as follows:
   1. Attach rack stanchion to manhole/handhole wall with ½-inch drop-in anchors and ½-x 3/8-inch stainless steel hex head cap screw. Stanchions shall be anchored at the top and bottom of each stanchion as well as above each cable arm.
   2. Provide cable arms to support cables on each rack along the cable run within the manhole/handhole. Provide a minimum of two racks on each wall and two spare cable arms per rack.
   3. Secure each cable or cable bundle to the cable arm with heavy duty, nylon wire ties, Richo WIT-225L or approved equal. Cable bundles shall be organized by circuit voltage and area served. Multiple circuits may be bundled together where the circuits are derived from the same immediate source and serve the same area. 480 volt AC circuits, No. 6 and larger, shall be individually bundled.

3.04 CABLE TRAY

A. Unless otherwise specified or shown, cable tray installation shall be as follows:
   1. Cable trays shall be supported at intervals not to exceed 5 feet.
   2. Corners shall be supported by two supports installed as close as possible to the corner, with one support on each side of the corner.
   3. Field cuts on steel cable tray shall be treated with zinc rich paint.
   4. Expansion joint splice plates shall be used to allow 1 1/2 inch free movement between adjacent trays when crossing building expansion joint.
   5. Cable tray shall have minimum clearance of 3/4 inch from concrete surfaces and minimum spacing of 12 inches from other trays. The top of the tray shall be minimum 9 inches from the ceiling.
   6. Signal cable trays shall be provided with solid type covers.
   7. Provide each cable tray with No. 2/0 AWG or No. 4/0 AWG minimum bare copper equipment ground conductor attached to the outside of each tray section using UL Listed bolted bronze or brass ground clamp and bond to the ground grid system.
   8. Power cables shall be placed in cable trays in accordance with the NEC.
   9. Cables shall be arranged in trays for minimum cross-over for entry or exit.

10. Provide cable tray barrier between power and control cables, if not in separate cable trays.
11. Provide cable tray barrier between control and instrument cable in the same cable tray.

3.05 RACEWAY NUMBERING

A. Each new and reused conduit shall be provided with a number tag at each end and in each manhole, handhole, or pull box. Cable trays shall be identified by stencils at intervals not exceeding 50 feet, at intersections, and at each end to identify power cable tray voltage, control cable tray, or instrument cable tray.

B. Raceway Numbers:
   1. Tag raceways at all terminations. Raceway numbers wiil comply with raceway lables assigned on the drawings. Where raceway numbers have not been assigned, assigne raceway numbers in accordance with the following system:

Raceway Prefix	Type of Function
C	Control or power - 120V or less
H	Power above 600V
N	Pneumatic tubing
CP	Combined control and power (only similar insulation ratings)
P	Power 208V to 600V
S	Signal - data communication or instrumentation
X	Spare

   2. Provide 4-digit number after the prefixes . Add a letter suffix to distinguish the raceways where more than one raceway is routed to a particular piece of equipment. Example: Raceway number = P3109A where:
      a. P = conduit contains power
      b. 3109 = unique 4-digit number
      c. A = letter to distinguish raceways to same equipment

3.06 RACEWAY SCHEDULE

A. General:
   1. Raceway shall be provided as specified on the drawings. Raceway not shown on the drawings are unscheduled and shall be provided as specified below.

B. Unscheduled Raceway:
   1. With the exception of lighting, communication, paging, fire alarm, security and receptacle circuits, the type and size of raceway shall be as specified on the drawings.

2. Unscheduled lighting and receptacle raceways shall be sized by the Contractor in accordance with the NEC. Minimum size shall be 3/4 inch for exposed and 1 inch for embedded raceway.
3. The number and size of communication, paging, fire alarm, and security raceways shall be as required for the particular equipment provided subject to the minimum sizes specified herein.

3.07 RACEWAY SPECIFICATION SHEETS (RACESPEC) - EMT

A. Raceway Identification:
   1. EMT

B. Description:
   1. Electrical Metallic Tubing

C. Compliance:
   1. ANSI and UL

D. Finish:
   1. Electro-galvanized steel

E. Minimum size:
   1. 3/4 inch

F. Fittings:
   1. Compression type.
   2. Fittings inside concrete block (CMU) walls:
      a. Concrete-tight.

G. Boxes:
   1. Electro-galvanized sheet steel.
   2. NEMA Class 1 stamped or form-bent steel with screw covers.

3.08 RACEWAY SPECIFICATION SHEETS (RACESPEC) – FLEX

A. Raceway Identification:
   1. FLEX

B. Description:
   1. Flexible Steel Conduit

C. Application:
   1. Final connection to equipment subject to vibration or adjustment.

D. Compliance:
   1. UL 1

E. Construction:
   1. Spirally wound galvanized steel strip with successive convolutions securely interlocked.

F. Minimum Size: 1/2 inch

G. Fittings:
   1. Compression type

H. Other:
   1. FLEX shall be provided with an internal ground wire.

3.09 RACEWAY SPECIFICATION SHEETS (RACESPEC) – GRS

A. Raceway Identification:
   1. GRS

B. Description:
   1. Galvanized Rigid Steel Conduit (GRS)

C. Compliance:
   1. ANSI and UL

D. Finish:
   1. Hot-dip galvanized after fabrication, inside and outside. Smooth finished surfaces.

E. Manufacturers:
   1. Allied Tube and Conduit Corp., Wheatland Tube Co., or approved equal.

F. Minimum size:
   1. Unless otherwise specified, 3/4 inch for exposed, 1 inch for embedded, encased, or otherwise inaccessible.

G. Fittings:
   1. Locknuts, Rings, Hubs:
      a. Hot-dip galvanized insulated throat with bonding locknut or ring,. The hubs shall utilize a neoprene "O" ring and provide a watertight connection. O-Z Gedney, CHM-XXT, or approved equal
   2. Unions:
      a. Electro-galvanized ferrous alloy type Appleton UNF or UNY, Crouse-Hinds UNF or UNY, or approved equal. Threadless fittings are not acceptable.
   3. Conduit Bodies:
      a. Oversized conduit bodies: Ferrous alloy type with screw taps for fastening covers to match the conduit system. Gaskets shall be made of neoprene.

H. Boxes:
   1. Indoor:
      a. Type FD cast ferrous for all device boxes and for junction boxes less than 6 inches square.
   2. Outdoor:
      a. Type FD cast ferrous for all device boxes and for junction boxes less than 6 inches square.
   3. Corrosive:
      a. NEMA 4X stainless steel or nonmetallic, as specified.
   4. Hazardous:
      a. NEMA Class 7 cast ferrous.

I. Elbows:
   1. 3/4" thru 1-1/2" –- Factory fabricated or field bent.
   2. 2" thru 6" –- Factory fabricated only.

J. Conduit Bodies (Oversized):
   1. 3/4" thru 4" –- Malleable iron, hot-dip galvanized, unless otherwise noted. Neoprene gaskets for all access plates. Tapered threads for conduit entrances.
   2. 5" and 6" –- Electro-galvanized iron or cast iron box.

K. Expansion Fittings:
   1. Expansion fittings in embedded runs shall be watertight with an internal bonding jumper. The expansion material shall be neoprene allowing for 3/4-inch movement in any direction.

L. Manufacturers:
   1. Appleton, Crouse-Hinds, Hubbell, O. Z. Gedney, or approved equal.

M. Installation:
   1. Rigid steel conduit shall be made up tight and with conductive thread compound. Joints shall be made with standard couplings or threaded unions. Steel conduit shall be supported away from the structures using hot-dip galvanized malleable iron straps with nesting backs or framing channel.
   2. Conduit entering boxes shall be terminated with a threaded hub with a grounding bushing.
   3. Exposed male threads on rigid steel conduit shall be coated with zinc-rich paint.

3.10 RACEWAY SPECIFICATION SHEETS (RACESPEC) – LFS

A. Raceway Identification:
   1. LFS

B. Description:

1. Liquidtight Flexible Steel Conduit

C. Application:
1. Final connection to equipment subject to vibration or adjustment.

D. Compliance:
1. UL 360

E. Construction:
1. Spirally wound galvanized steel strip with successive convolutions securely interlocked and jacketed with liquidtight plastic cover.

F. Minimum Size: 3/4 inch

G. Fittings:
1. Cadmium-plated malleable iron body and gland nut with cast-in lug, brass grounding ferrule threaded to engage conduit spiral.
2. O-ring seals around the conduit and box connection and insulated throat.
3. Provide forty-five and ninety degree fittings where applicable.
4. Provide PVC coated flexible conduit and fittings where the conduit system is PVC coated.

H. Installation:
1. Length of flexible liquidtight conduit shall not exceed 15 times the trade diameter of the conduit and not exceed 36 inches in length. Use conductive thread compound.

3.11 RACEWAY SPECIFICATION SHEETS (RACESPEC) — PGRS

A. Raceway Identification:
1. PGRS

B. Description:
1. Rigid Steel Conduit, Corrosion-Resistant, Polyvinyl Chloride (PVC) Coated.
2. Provide factory made and coated elbows.

C. Compliance:
1. ANSI, ETL and UL. The PVC coated rigid galvanized steel conduit shall be stamped with the ETL Verification Mark “ETL Verified to PVC-001”.

D. Finish:
1. PGRS shall be hot-dip galvanized rigid steel conduit as specified in Section 26 05 33-paragraph 3.03 GRS, with a PVC Coating. The PVC coating shall be gray, minimum 40 mils thick, bonded to the outside and continuous over the entire length of the conduit except at the threads, and be free of blisters, bubbles, or pinholes. Thread protectors shall be used on the exposed threads of the PVC coated conduit.

2. A 2-mil coat of urethane enamel coating shall be bonded to the inside. Coating shall be free of pinholes. Bond strength shall exceed the tensile strength of the PVC coat.

E. Minimum Size: 3/4 inch

F. Fittings:
1. Similarly coated to the same thickness as the conduit and provided with Type 316 stainless steel hardware. Conduit and fittings shall be manufactured by the same company Conduit and fittings shall be coated by the same company. Male threads on elbows and nipples, and female threads on fittings or conduit couplings shall be protected by application of urethane coating.

G. Covers:
1. PVC coated covers shall have V-groove seal and stainless steel hardware.

H. Hubs:
1. Hubs for connection of conduit to junction, device, or terminal boxes shall be threaded cast ferrous alloy.
2. Hubs shall have the same PVC coating as the conduit and insulating grounding bushings. Hubs shall utilize a neoprene "O" ring and shall provide a watertight connection.

I. Boxes:
1. Nonhazardous:
   a. NEMA Class 4X stainless steel or nonmetallic.
2. Hazardous:
   a. NEMA Class 7 cast ferrous.

J. Manufacturers:
1. PVC coated conduit that bears the ETL Verified PVC-001 label by Robroy Industries, Plasti-Bond, Perma-Cote, KorKap or approved equal.

K. Installation:
1. Plastic coated conduit shall be made up tight, threaded, and installed using tools approved by the PVC-coated conduit manufacturer.
2. Exposed conduit threads shall be covered by a plastic overlap coated and sealed per manufacturer’s recommendations.
3. Pipe wrenches and channel locks shall not be used for tightening plastic coated conduits. Damaged areas shall be patched, using manufacturer’s recommended material. The area to be patched shall be built up to the full thickness of the coating. Painted fittings are not acceptable.
4. PVC coated conduit shall be supported away from the structure using PVC coated conduit wall hangers or PVC coated conduit mounting hardware.
5. Damaged work shall be replaced

L. Training:

1. Installers shall be trained and certified in the proper installation techniques provided by the PVC-coated conduit system manufacture. Proof of certification shall be provided under paragraph 1.03.

3.12 RACEWAY SPECIFICATION SHEETS (RACESPEC) – PVC4

A. Raceway Identification:
   1. PVC4

B. Description:
   1. Rigid Nonmetallic Conduit.

C. Application:
   1. Heavy wall thickness for direct bury, concrete encasement or surface mounting where not subject to physical damage.

D. Compliance:
   1. NEMA TC2, UL 651

E. Construction:
   1. Schedule 40, high-impact, polyvinylchloride (PVC)

F. Minimum size: 3/4 inch exposed; 1 inch embedded or encased

G. Fittings:
   1. PVC solvent weld type

H. Boxes:
   1. Indoor:
      a. NEMA Class 4, nonmetallic
   2. Outdoor and corrosive:
      a. NEMA Class 4X, nonmetallic

I. Installation:
   1. PVC conduit entering fiberglass boxes or cabinets shall be secured by threaded bushings on the interior of the box and shall be terminated with a threaded male terminal adapter having a neoprene O ring.
   2. Joints shall be made with standard PVC couplings.
   3. PVC conduit shall have bell ends where terminated at walls and boxes.

3.13 RACEWAY SPECIFICATION SHEETS (RACESPEC) – TRAY (NOT USED)

3.14 RACEWAY SPECIFICATION SHEETS (RACESPEC) – WW

A. Raceway Identification:
   1. WW

B. Description:
   1. Wireway and Auxiliary Gutter: Match the conduit or raceway system specified and shown on the drawings.
   2. Minimum: Flanged, oiltight type with hinged covers

C. Application:
   1. As shown on the drawings.

D. Compliance:
   1. JIC EMP-1

E. Sizes as Shownshown:
   1. 4 inch by 4 inch, 6 inch by 6 inch, 8 inch by 8 inch

F. Finish:
   1. Hot-dip galvanized after fabrication, inside and outside. Smooth finished surfaces.

G. Indoor Non-Corrosive Area:non-corrosive area:
   1. NEMA-1, NEMA-12, NEMA-4 or as shown on the drawings.

H. Outdoor and Corrosive Area:corrosive area:
   1. NEMA-3R, NEMA-4X or as shown on the drawings.

3.15 RACEWAY SPECIFICATION SHEETS (RACESPEC) – XPFS

A. Raceway Identification:
   1. XPFS

B. Description:
   1. Explosion-proof Flexible Steel Conduit

C. Application:
   1. XPFS Conduit coupling shall be used for final connections to motors and other equipment subject to vibration or adjustment in Class I Division 1 hazardous areas and shall be watertight.

D. Size: 1/2 inch – 4-inch

E. Length: maximum 36-inch

END OF SECTION

SECTION 26 05 74
ARC FLASH HAZARD ANALYSIS, SHORT CIRCUIT STUDY, AND PROTECTIVE DEVICE COORDINATION REPORT

PART 1 GENERAL

1.01 DESCRIPTION

A. General:
   1. This section specifies that the Contractor subcontract a NETA Engineering and Study Firm / Testing Firm to prepare:
      a. Electrical equipment short circuit study (SCS) for all new equipment.
      b. Protective device coordination study (PDCS) report for all new equipment in the electrical distribution power system.
      c. Arc flash hazard analysis (AFHA) and labeling for all equipment per NFPA 70E.

B. The Testing Firm shall be as described in Section 26 08 00 and shall also be responsible for the electrical testing described therein.

C. Scope:
   1. The Short Circuit and Protective Device Coordination Report shall include analysis including Utility Company equipment that affect the installed equipment's short circuit ratings, protective device ratings and protective device settings.
   2. Report shall also include analysis of the equipment's short circuit ratings, protective device ratings and protective device settings affected by the installed equipment.
   3. Report shall include the results of the arc flash hazard analysis study for energized electrical equipment in accordance with the methods outlined in IEEE Standard 1584 and stated hereinafter.
   4. Work shall include the fabrication of warning labels with the arc flash hazard analysis results and the installation of the labels on the equipment in accordance with NFPA 70E Article 130.5 that includes nominal system voltage, arc flash boundary, and at least one of the following: Available incident energy and corresponding working distance or the arc flash personnel protective equipment (PPE) level but not both, the minimum arc rating of clothing, site specific level of PPE.
   5. The study software files shall be provided to the City.

1.02 REFERENCES

A. This section contains references to the following documents. They are a part of this section as specified and modified. Where a referenced document contains references to other standards, those documents are included as references under this section as if referenced directly. In the event of conflict between the requirements of this section and those of the listed documents, the requirements of this section shall prevail.

B. Unless otherwise specified, references to documents shall mean the documents in effect at the time of Advertisement for Bids or Invitation to Bid (or on the effective date of the Agreement if there were no Bids). If referenced documents have been discontinued by the issuing organization, references to those documents shall mean the replacement documents issued or otherwise identified by that organization or, if there are no replacement documents, the last version of the document before it was discontinued. Where document dates are given in the following listing, references to those documents shall mean the specific document version associated with that date, regardless of whether the document has been superseded by a version with a later date, discontinued or replaced.

Reference	Title
IEEE 141	Recommended Practice for Electric Power Distribution for Industrial Plants
IEEE 242	Recommended Practice for Protection and Coordination of Industrial and Commercial Power Systems
NETA ATS	Acceptance Testing Specifications for Electrical Power Distribution Equipment and Systems, latest adopted edition
NFPA 70E	Standard for Electrical Safety in the Workplace
NFPA 70	National Electrical Code, 2017 edition

1.03 SCHEDULE

A. The report shall be completed, submitted to the Construction Manager for acceptance and reworked to include the Construction Manager comments and corrections, as required. The report shall be approved by the Construction Manager prior to purchase and fabrication of electrical equipment including switchgear.

B. A copy of the Construction Manager accepted report shall be sent by the Contractor to all affected manufacturers prior to fabrication.

1.04 SUBMITTALS

A. The report specified in this Section shall be provided in accordance with Section 01 33 00.

PART 2 PRODUCTS

2.01 REPORT

A. The product shall be a certified report summarizing the short circuit and coordination study and conclusions or recommendations which may affect the integrity of the electric power distribution system. As a minimum, the report shall include the following:
   1. The equipment manufacturer's information used to prepare the study.
   2. Power Utility Company system information applicable to the project.

3. Short circuit calculations listing short circuit levels at each bus. Provide a sketch of the bus and use both the project term and the bus-code-name to identify the bus, branches, sources, loads. Base the system on the Project One-Line diagram.
4. Coordination study time-current curves including the instrument transformer ratios, model numbers of the protective relays, and the relay settings associated with each breaker.
5. Comparison of short circuit duties of each bus to the interrupting capacity of the equipment protecting that bus.
6. Data used as input to the report that includes cable impedances, source impedances, equipment ratings for the equipment being purchased for the project, etc.
7. Arc flash hazard calculations listing incident energy levels at each bus.
8. Copy of the Arc flash warning labels displaying information in accordance with NFPA 70e requirements.
9. Assumptions made during the study.

PART 3 EXECUTION

3.01 GENERAL

A. Provide a short circuit and coordination study on the electrical power distribution system as specified and as described in Section 6.1 of NETA ATS. The studies shall be performed in accordance with IEEE Standards 141 and 242 and shall utilize the ANSI method of short circuit analysis in accordance with ANSI C37.010.

B. The studies shall be performed using actual equipment data for both existing and new equipment. The coordination study shall use the data from the same manufacturer of protective relay devices as being provided by the switchgear manufacturer.

C. For new equipment, the Contractor shall provide copies of final reviewed equipment submittals upon request by the Study Firm.

D. For existing equipment, the Study Firm shall provide [one] separate one man-day trips of onsite investigation to identify loads and power distribution equipment data.

E. Any power distribution equipment outages shall be scheduled in advance and coordinated with the Owner to limit process outages as required per plant process capacities, refer to Section 26 05 00.

3.02 QUALIFICATIONS

A. The short circuit and coordination report shall be performed by the Study Firm/ Testing Firm as described in Section 26 08 00. The studies shall be signed by the professional electrical engineer responsible for the studies and registered to practice engineering in the state in which the project is located.

3.03 SHORT CIRCUIT STUDY

A. The Contractor shall be responsible to obtain and verify all data needed to perform the study. As a minimum, the short circuit study shall include the following:
   1. One-Line Diagram
      a. Location and function of each protective device in the system, such as relays, direct-acting trips, fuses, etc.
      b. Type designation, current rating, range or adjustment, manufacturer's style and catalog number for all protective devices.
      c. Power, voltage ratings, impedance, primary and secondary connections of all transformers.
      d. Type, manufacturer, and ratio of all instrument transformers energizing each relay.
      e. Nameplate ratings of all motors and generators with their subtransient reactances. Transient reactances of synchronous motors and generators and synchronous reactances of all generators.
      f. Sources of short circuit currents such as utility ties, generators, synchronous motors, and induction motors.
      g. circuit elements such as transformers, cables, breakers, fuses, reactors, etc.
      h. Emergency as well as normal switching conditions, as applicable.
      i. The time-current setting of existing adjustable relays and direct-acting trips, as applicable.

B. Calculations
   1. Determine the paths and situations where short circuit currents are the greatest.
   2. Study shall address bolted faults and calculate the 3-phase and line-to-ground short circuits of each case.
   3. Calculate the maximum and minimum fault currents.

3.04 ARC FLASH HAZARD ANALYSIS

A. The Contractor shall be responsible to obtain and verify all data needed to perform the study. The arc flash analysis study shall include the following IEEE Standard 1584 nine step analysis process:
   1. Collect system and installation data.
   2. Determine modes of operation.
   3. Determine bolted fault current.
   4. Determine arc fault current.
   5. Determine protective device characteristic and arc fault duration.
   6. Document system voltages and equipment class.
   7. Select working distances.
   8. Calculate incident energy.
   9. Calculate the arc flash protection boundary.

10. Arc flash mitigation analysis.

3.05 PROTECTIVE DEVICE COORDINATION STUDY

A. As a minimum, the coordination study for the power distribution system shall include the following on 5-cycle, log-log graph paper:
   1. Time-current for each protective relay or fuse showing graphically that the settings will provide protection and selectivity within industry standards. Each curve shall be identified, and the complete protective relay settings shall be specified.
   2. Time-current curves for each device shall be positioned to provide for maximum selectivity to minimize system disturbances during fault clearing. Where selectivity cannot be achieved, the Construction Manager shall be notified as to the cause.
   3. Time-current curves and points for cable and equipment damage.
   4. Circuit interrupting device operating and interrupting times.
   5. Indicate maximum fault values on the graph.
   6. Sketch of bus and breaker arrangement.

3.06 IMPLEMENTING PDCS SETTINGS AND ARC FLASH SIGN INSTALLATION

A. The Study Firm/Testing Firm shall work with the Contractor to implement the protective device coordination study settings on new and existing equipment as required in Section 26 08 00, based on the Engineers accepted Protective Device Coordination Report specified herein and submit a final amended report of the Record As-Built electrical equipment protective device settings subsequent to start-up and testing.

B. The Study Firm/Testing Firm shall work with the Contractor for implementing the Arc Flash Hazard warning labels installation requirements for electrical equipment as specified in NEC Article 110.16 Arc-Flash Hazard Warning and NFPA 70E requirements.

END OF SECTION

THIS PAGE INTENTIONALLY LEFT BLANK

SECTION 26 08 00
COMMISSIONING OF ELECTRICAL SYSTEMS

PART 1 GENERAL

1.01 DESCRIPTION

A. Scope:

1. The electrical equipment and conductors to be tested are specified herein and shown on the electrical drawings of the Contract Documents.
2. The Contractor shall retain an InterNational Electrical Testing Association (NETA) member Engineering and Testing Firm (Testing Firm) for specified on-site acceptance testing of the project electrical power distribution system and utilization equipment covered by this contract.
3. The Testing Firm shall be responsible for the Short Circuit and Protective Device Coordination Report as specified in Section 26 05 74. The Testing Firm shall verify the protective device settings are implemented in accordance with Section 26 05 74. The Testing Firm work includes the ARC-Fault equipment labeling work as specified in Section 26 05 74.
4. Tests performed by the Testing Firm shall be witnessed by the Owner's Representative. Provide the Construction Manager 30-day advanced notice for Testing Firm tests. Insulation tests by the Contractor typically will not be witnessed. Critical equipment witness testing may be requested by the Construction Manager.
5. The manufacturer of the electrical equipment supplied for the project shall complete their on-site factory inspection, testing, and setup prior to the Testing Firm's Acceptance Testing and subsequent Protective Device setting verification work. The power monitors shall be set up by the factory representatives and power monitor readings and settings verified by the Testing Firm. Manufacturer work is specified in the respective equipment sections.
6. The Installation Contractor shall test motors, conductors, and equipment as specified and shown. Contractor shall provide the labor, tools, material, including quality power sources required by the Testing Firm equipment, and other services necessary to provide specified tests and retesting.
7. Submit proposed electrical test procedures for tests to be performed by the Installing Contractor, other than insulation resistance testing, and proposed test procedures for tests to be performed by the Testing Firm.

1.02 QUALITY ASSURANCE

A. References

1. This section contains references to the following documents. They are a part of this section as specified and modified. Where a referenced document contains references to other standards, those documents are included as references under this section as if referenced directly. In the event of conflict between the requirements of this section and those of the listed documents, the requirements of this section shall prevail.

2. Unless otherwise specified, references to documents shall mean the documents in effect at the time of Advertisement for Bids or Invitation to Bid (or on the effective date of the Agreement if there were no Bids). If referenced documents have been discontinued by the issuing organization, references to those documents shall mean the replacement documents issued or otherwise identified by that organization or, if there are no replacement documents, the last version of the document before it was discontinued. Where document dates are given in the following listing, references to those documents shall mean the specific document version associated with that date, regardless of whether the document has been superseded by a version with a later date, discontinued or replaced.

Reference	Title
ANSI/NETA ATS	International Electrical Testing Association (NETA) - Standard for Acceptance Testing Specifications for Electrical Power Equipment and Systems

B. Testing Firm:
   1. The Testing Firm and their proposed project team shall possess the following minimum qualifications:
      a. Testing Firm shall be an independent testing organization providing unbiased testing authority, professionally independent of the manufacturers, suppliers, and installers of equipment or systems to be evaluated.
      b. Testing Firm shall be regularly engaged in the testing of electrical equipment, devices, installations, and systems.
      c. Testing Firm shall be a “NETA Accredited Company” of the InterNational Electrical Testing Association (NETA providing testing in accordance with ANSI/NETA ATS published specifications or the pre-approved firms that use the NETA methods and published testing specifications.
      d. If firm's own published testing specifications are proposed, then submit a copy to the Engineer for acceptance and submit the qualifications of the testing staff.
      e. Testing Firm's lead technical person shall be currently certified by NETA or the National Institute for Certification in Engineering Technologies (NICET) in electrical power distribution systems testing. Submit proof of technical training and certification for performing testing work.
      f. Testing Firm's technicians shall be regularly employed, qualified testing staff.

C. Testing Firm Qualifications:
   1. For any Testing Firm not pre-qualified, the Contractor shall receive Construction Manager approval of the proposed Testing Firm, their proposed project team, and their test procedures prior to the Pre-Test Submittals.
      a. Project Team:
         1) Identify lead technical person and testing staff and provide documentation of training and experience demonstrating compliance with the qualifications specified.
      b. Testing Firm:

1) Provide reference names and current phone numbers of the Owner, Contractor, Engineer, or Construction Manager that has knowledge of the Firm's work:

a) Provide references for recent projects that were completed. Provide a description of the scope of the referenced project.

c. For Testing Firm's experience to be judged acceptable, the Contractor shall demonstrate that the proposed Testing Firm's reference projects are of similar scope and size to this project, and in performing these projects the following has been achieved:

1) Testing Firm's work did not delay the projects or adversely impact the progress of the Contractor's work or the Owner's project.
2) Specified requirements were achieved.
3) Work was performed in accordance with ANSI/NETA ATS, MTS, or other Engineer accepted testing criteria.
4) Submittals approved with two or fewer re-submittals after the initial submittal.
5) No warranty claims related to the Testing Firm's work.

d. Provide documentation demonstrating NETA Accreditation and compliance with the qualification specified.

1.03 SUBMITTALS

A. Contractor shall submit the following information in accordance with specification Section 01 33 00:

B. Testing Firm Qualifications:

1. For any Testing Firm not pre-qualified per paragraph 1.02 Testing Form, submit qualifications per paragraph 1.02 Testing Firm Qualifications.

C. Pre-Test Submittals:

1. Description or samples of specified test procedures.
2. Sample test report forms for the specified tests.
3. Preliminary Schedule listing equipment to be tested.
4. Notification form for the work scheduled.
5. Pre-Functional test procedures and testing schedule.
6. Functional test procedures and testing schedule.

Form No.	Title
26 05 00-A	Wire and Cable Resistance Test Data Form
26 05 00-B	Installed Motor Test Data Form
26 05 00-C	Dry Transformer Test Data Form
26 05 00-D	Motor Control Center Test Form
26 05 00-G	Protective Relay Test Form
26 05 00-K	Automatic Transfer Switch Test Form

D. Post-Test Submittals: Test Reports specified in Part 3 of this Section.

PART 2 PRODUCTS

2.01 TESTING EQUIPMENT AND INSTRUMENTS

A. The test equipment, instruments and devices used for testing shall be calibrated to test equipment standards with references traceable to the National Institute of Standards and Technology.

B. The test equipment, instruments and devices shall have current calibration stickers indicating date of calibration, deviation from standard, name of calibration laboratory and technician, and date of next recalibration.

PART 3 EXECUTION

3.01 GENERAL

A. The Contractor shall submit a schedule for the Testing Firm work and notify the Construction Manager 30 days prior to commencement of any witnessed testing.

B. The required tests, including correction of defects where found, and subsequent retesting, shall be completed prior to energizing electrical distribution system, utilization systems, and conductors and completed prior to functional testing. The installation of the protective device, breaker, and relay settings shall be completed and verified.

3.02 INSTALLATION CONTRACTOR TESTING

A. General: Submit all completed test report forms in a 3-ring binder type notebook at the project Substantial Completion date.

B. Insulation Resistance Measurements:
   1. Tests:
      a. Insulation resistance measurements shall be made on conductors and electrical equipment that will carry current. Where not specified, the minimum acceptable values of insulation resistance shall be in accordance with the applicable NETA-ATS, ICEA, NEMA, or ANSI standards for the equipment or material being tested.
   2. The ambient temperature at which insulation resistance is measured shall be recorded on the test form. A megohmmeter shall be used for insulation resistance measurements.
   3. Refer to specification Section 01 99 90 for the test forms required to document the testing performed by the Installing Contractor.
   4. Conductor and Cable Tests:
      a. The phase-to-ground insulation resistance shall be measured for circuits 120 volts and above except lighting circuits. Measurements may be made with motors and other load equipment connected. Insulation resistance measurements shall be recorded on Form 26 05 00-A contained in Section 01

99 90, and submitted. Insulation with resistance of less than 100 megohms is not acceptable.

5. Motor Tests:
   a. The Installed Motor Test Form, Form 26 05 00-B, contained in Section 01 99 90, shall be completed for each motor after installation and submitted. All motors shall have their insulation resistance measured before they are connected.
6. Motors 50 HP and larger shall have their insulation resistance measured. Insulation resistance values less than 50 megohms are not acceptable.
7. Verify that motors are connected to rotate in the correct direction with the load disconnected. Verification may be accomplished by momentarily energizing the motor, provided the Contractor confirms that neither the motor nor the driven equipment will be damaged by reverse operation.
8. Motor running current shall be measured on each phase with the motor operating under load. Current imbalance shall be less than 5-percent difference between phases.

C. Power Distribution Equipment: Transformers, panelboards, and other power distribution equipment shall have their insulation resistance measured phase-to-phase and phase-to-ground. Insulation resistance values less than 10 megohms are not acceptable.

D. Power Utilization Equipment: Test receptacles and power outlets using a device to verify polarity, grounding, and the correct wiring connections.
   1. Instruments used for continuity measurements shall have a resolution of 0.1 ohms and an accuracy of better than 0.1 percent of reading plus 0.3 ohms. A 500-volt or 1000-volt meg-ohmmeter shall be used for insulation resistance measurements as appropriate.

E. Pre-Functional Checkout:

F. Prior to energizing equipment, the Contractor shall perform a pre-functional checkout of the power and the control circuit. Protective devices shall be installed and available for service and calibrated or adjusted with specified setpoints installed. Contractor selected initial setpoints shall be installed and recorded, when specified setpoints are not required from the manufacturer or the Engineer.
   1. Contractor shall submit a description of proposed test and checkout procedures conforming to the following requirements, including a schedule for conducting these procedures, not less than 30 days prior to the performance of pre-functional testing.
   2. Pre-functional checkout shall consist of energizing each control circuit and operating each control device, protective device, monitoring or alarm device, and each interlock and verify the specified action or response occurs. Coordinate testing with the requirements specified in Section 01 45 20.

G. Functional Testing:
   1. Contractor shall submit a description of proposed functional test and checkout procedures conforming to the following requirements, including a schedule for

conducting these procedures, not less than 30 days prior to the performance of functional testing.

2. Prior to functional testing, all protective devices shall be adjusted and made operative. Prior to energization of associated equipment, perform a functional checkout of all electrical and instrumentation control circuits as specified in the following and in Division 40. Checkout shall consist of energizing each control circuit and operating each control, alarm, safety device, and each interlock, in turn, to verify that the specified action occurs.
3. Record and submit data sheets as specified. Coordinate testing with the requirements specified in Section 01 91 14.

3.03 TESTING FIRM ACCEPTANCE TESTING REQUIREMENTS

A. Acceptance Test Reports:
   1. The Contractor shall maintain a written record of all inspection and test results and, upon completion of the project, shall assemble and certify a final test report
   2. A copy of the preliminary test results shall be provided to the Construction Manager at the end of each day of testing.
   3. Furnish two copies of the complete acceptance testing final report to the Construction Manager at Substantial Completion of the project.

B. Acceptance Test Documentation: The Contractor shall submit test documentation forms and a detailed description of the proposed inspection and test procedures to be performed by the Testing Firm. Testing shall not commence until the Construction Manager has approved the proposed forms and procedures.

C. The description shall identify the test equipment required for each specified test to be performed. Test report forms shall include the following information:
   1. Electrical equipment description.
   2. Electrical equipment identification number.
   3. Electrical equipment nameplate data.
   4. Electrical equipment settings.
   5. Time and date of test.
   6. Ambient conditions at time of test.
   7. Inspection checklist and results.
   8. Test results.
   9. Test equipment used with manufacture, model number, and calibration date.
   10. Remarks about test procedures, results, and suggestions.
   11. Name and signature of testing personnel.
   12. Name and signature of test witness.

D. Acceptance Testing Firm Tests:
   1. Acceptance testing procedures and test results shall be as specified in ANSI/NETA ATS. The following types of equipment and systems shall be inspected and tested by the Testing Firm. Acceptance testing work shall not be limited to equipment

shown on the drawings. Refer to Division 26 specification for the electrical equipment specified.

a. Refer to the electrical drawings for location and identification of the electrical distribution system equipment, utilization equipment, and electrical conductors, included but not limited to as applicable:
   1) Transformers Dry-Type Air-Cooled.
   2) Cables Low-Voltage 600 Volt Maximum.
   3) Protective Relays.
   4) Instrument Transformers.
   5) Metering, include non-utility power metering equipment.
   6) Grounding Systems include installed grounding systems and existing grounding systems that are being utilized.
   7) Ground Fault Protection Systems.
   8) Motors.
   9) Motor Starters Low-Voltage.
   10) Motor Control Centers Low-Voltage.
   11) Adjustable Speed Drive Systems and harmonic testing per Section 26 29 23-3.02.
   12) Surge Protection Devices, include lightning arresters, surge capacitors, and TVSS.
   13) Capacitors and Inductors.
   14) Uninterruptible Power Systems (UPS).
   15) Manual Transfer Switched (MTS).

3.04 ACCEPTANCE TEST VALUES

A. Minimum acceptable test values shall be as specified in ANSI/NETA ATS. Where acceptance test values are not specified, the equipment manufacturer's recommended test values shall be used. Where acceptance test values are not specified and the equipment manufacturers recommended test values are not available, request acceptance test values from the Construction Manager.

3.05 ACCEPTANCE TEST FINAL REPORT

A. Test report shall be assembled as described in ANSI/NETA ATS. Test results shall be organized by electrical distribution system equipment, project utilization equipment, and electrical conductors with individual tab dividers with labels to identify each group of items and cross-referenced to the Contract Documents. The equipment description, equipment number, and equipment tag number shall be used as shown on the drawings or listed in specifications.

B. Final Test Reports that are illogically assembled, labeled, and organized shall be returned for rework at no cost to the Owner and resubmitted in an acceptable format.

C. Deficiencies and non-compliant test results found during acceptance testing shall be identified in the test report and cover letter. The Testing Firm shall certify in the final

test report that all deficiencies and non-compliant test results listed have been "corrected" and shall include a description of the resolution for each problem listed.

3.06 PROTECTIVE DEVICE FIELD SETTINGS

A. The Testing Firm shall verify, and certify in the acceptance test final report, that the protective device coordination study settings for new and existing equipment based on the Short Circuit and Protective Device Coordination Report specified in Section 26 05 74 have been implemented and recorded on the Testing Firm's Data Sheets.

3.07 ARC FLASH STUDY RESULTS

A. The Testing Firm shall provide and install labels on the project electrical equipment for personnel protective clothing requirements as specified in Section 26 05 74.

END OF SECTION

SECTION 26 09 16
ELECTRICAL CONTROLS AND RELAYS

PART 1 GENERAL

1.01 DESCRIPTION

A. The vendor, manufacturer, and custom control panels shall provide enclosures, selector switches, pushbuttons, indicators, terminal strips, surge devices, nameplates, testing procedures, wiring method, wiring color coding, wire labeling, separation between power, controls, and instruments, hardwired logic relays or PLC logic products as specified herein Sections 40 95 10 .

B. This section specifies electrical control and monitoring devices:
   1. Control Devices:
      a. Pushbuttons
      b. Selector Switches
      c. Indicating Lights
      d. Control Station Enclosures
      e. Horns
      f. Beacons
   2. Control Relays:
      a. Load-Switching
      b. Logic Level Switching
      c. Timers and Time Switch
      d. Alternators

C. This section specifies power devices:
   1. Magnetic Contactors:
      a. Lighting Contactors
      b. Motor Contactors
   2. Safety Disconnect Switches
   3. Manual starters per Section 26 24 19
   4. Field Instrument and Field Analyzer: Key-Switch in control station with surge devices
   5. Overcurrent Protection: Circuit breakers
   6. Elapsed Time Indicators
   7. Current transformers and transducers
   8. Time Switch
   9. Motor Driven Timers – On Delay and Off Delay
   10. Intrusion Switches and Override Key Switches
   11. Thermostats
   12. Static Ground Indicator and Interlock System

13. Uninterruptible Power System (UPS)

D. Request clarification where conflicts occur with this section and other sections in Divisions 23, 26, 40, 43, and 46.

1.02 REFERENCES

A. This section contains references to the following documents. They are a part of this section as specified and modified. Where a referenced document contains references to other standards, those documents are included as references under this section as if referenced directly. In the event of conflict between the requirements of this section and those of the listed documents, the requirements of this section shall prevail.

B. Unless otherwise specified, references to documents shall mean the documents in effect at the time of Advertisement for Bids or Invitation to Bid or on the effective date of the Agreement if there were no Bids.

C. If referenced documents have been discontinued by the issuing organization, references to those documents shall mean the replacement documents issued or otherwise identified by that organization or, if there are no replacement documents, the last version of the document before it was discontinued.

D. Where document dates are given in the following listing, references to those documents shall mean the specific document version associated with that date, regardless of whether the document has been superseded by a version with a later date, discontinued or replaced.

Reference	Title
NEMA 250	Enclosures for Electrical Equipment (1000 volts maximum)
NEMA ICS-1	General Standards for Industrial Controls and Systems
NEMA ICS-2	Industrial Control Devices, Controllers, and Assemblies
NEMA KS 1	Enclosed Switches

1.03 SUBMITTALS

A. The following submittals shall be provided in accordance with Section 01 33 00 and Section 40 91 00:

1. A copy of this specification section, with addendum updates included, and all referenced and applicable sections, with addendum updates included, with each paragraph check-marked to indicate specification compliance or marked to indicate requested deviations from specification requirements.
   a. Check marks shall denote full compliance with a paragraph as a whole. If deviations from the specifications are indicated, and therefore requested by the Contractor, each deviation shall be underlined and denoted by a number in the margin to the right of the identified paragraph, referenced to a detailed written explanation of the reasons for requesting the deviation.

b. The Engineer shall be the final authority for determining acceptability of requested deviations. The remaining portions of the paragraph not underlined will signify compliance on the part of the Contractor with the specifications.
c. Failure to include a copy of the marked-up specification sections, along with justification(s) for any requested deviations to the specification requirements, with the submittal shall be sufficient cause for rejection of the entire submittal with no further consideration.

2. Arrangement drawings of the panel enclosure indicating the front door and panel equipment arrangement and dimensions, and enclosure type.
3. Nameplate legend with engraving and sizes.
4. Internal layout drawings showing all components.
5. List of materials and components with the layout drawings.
6. Elementary / schematic diagrams.
7. Internal wiring connection diagrams.
8. External wiring interconnection diagrams including interlocks.
9. Power and control single line diagrams, where motor controllers are included.
10. Manufacturer's catalog data for all material provided under this section shall be assembled in a folder with each page clearly marked with the item model number and reference number to the specification.

PART 2 PRODUCTS

2.01 CONTROL DEVICES

A. Pushbuttons:
1. Pushbuttons shall be flush head, heavy-duty, with NEMA rating to match enclosure type. Operators shall be green for start function, red for stop functions, and black for all other functions.
2. The escutcheon legend shall be as specified on the drawings.
   a. UL Listed.
   b. Dielectric Strength: 1300 Volts for one minute for Logic Reed contacts, 2200 Volts for one minute for other contacts.
   c. 30.5mm mounting hole.
   d. Temperature operating range –10 degree C. to +55 degree C.
   e. Momentary contact type.
   f. When switching circuits are monitored by programmable controllers or other solid state circuits, furnish hermetically-sealed, logic-reed type contacts rated not less than 0.15 amperes at 150 Vac and 0.06 amperes at 30 Vdc.
   g. When switching circuits are not monitored by programmable controllers or other solid state circuits, furnish contacts with NEMA Utilization Category rating A600 rated not less than 10 amperes continuous and 6 amperes break at 120 Vac.
   h. Separate pushbuttons for Start and Stop operation.
3. Manufacturer: Allen-Bradley 800T/800H series or approved equal.

B. Selector Switches:
   1. Selector switches shall be heavy-duty with NEMA rating to match enclosure type. Selector switches shall have maintained position contacts.
   2. Switches shall be provided with contact blocks and number of positions as required performing the specified or indicated operations.
   3. The escutcheon legend shall be as specified on the drawings. Provide:
      a. UL Listed.
      b. Dielectric Strength: 1300 Volts for one minute for Logic Reed contacts, 2200 Volts for one minute for other contacts.
      c. 30.5mm mounting hole.
      d. Temperature operating range –10 degree C. to +55 degree C.
      e. Standard knob operator (not lever type nor wing lever type).
      f. Number of positions and contact configuration as shown on Drawings.
      g. When switching circuits are monitored by programmable controllers or other solid state circuits, furnish hermetically-sealed, logic-reed type contacts rated not less than 0.15 amperes at 150 Vac and 0.06 amperes at 30 Vdc.
      h. When switching circuits are not monitored by programmable controllers or other solid state circuits, furnish contacts with NEMA Utilization Category rating A600 rated not less than 10 amperes continuous and 6 amperes break at 120 Vac.
   4. Manufacturer: Allen-Bradley 800T/800H series or approved equal.
   5. Field instruments and field analyzers specified in Section 40 70 00 shall have a lock-out style selector switch for locking on or locking off the 120Vac power source.
   6. The selector switch shall use a control station in NEMA-12, 4, 4X, or 7 as required by the area classification.
   7. Provide O-Z/Gedney Class 441 with two position key-operated maintained contact switch.
   8. Provide surge protection device that matches the enclosure type of the power disconnect type control station, field instrument, or field analyzer: Telematic TP48 transmitter surge protection device or approved equal.

C. Indicating Lights:
   1. Red, amber, green, and blue indicating lights shall be heavy-duty full voltage 120Vac or 24Vdc push-to-test LED type with NEMA rating to match enclosure type for installation in a 30.5mm hole. Furnish with 28 chip high visibility LED.
   2. The escutcheon and lens color shall be as shown on Drawings or scheduled.
   3. White indicating lights shall be as above, high intensity type.
   4. Manufacturer:
      a. Allen-Bradley 800H-QRTH10 series or approved equal for 120Vac applications with colors other than white.
      b. Allen-Bradley 800HQRTH24 series or approved equal for 24Vdc applications with colors other than white.
      c. Allen-Bradley 800H-QRT10 series or approved equal for 120Vac applications with white.

d. Allen-Bradley 800H-QRT24 series or approved equal for 24Vdc applications with white.

5. Indicating Light Lens Color:

Lens Color	Typical Function	Example
Red	Danger, running, open	Equipment operating, motor running, valve open, power voltage applied, cycle in automatic
Amber	Fault condition, attention	Equipment failure, status abnormal
Green	Off, closed, ready	End of cycle; unit or head returned; motors stopped; motion stopped; contactors open, valve closed
White or Clear	Normal condition	Normal pressure of air, water, lubrication, control power on, status okay
Blue	Advisory	Control mode not in automatic

D. Control Station Enclosures:

1. Enclosures locations and ratings:
   a. Indoors – conditioned space: NEMA 12
   b. Outdoors, process and Corrosive areas: NEMA 4X stainless steel, or non-metallic in chlorine storage areas

E. Control Power Transformers:

1. Sized for the panel devices and products.
2. Dual primary and single secondary fusing.

2.02 CONTROL RELAYS

A. Load-Switching Control Relays:

1. Control relays used for switching loads such as solenoids, actuators, contactors, motor starter coils, remote interlocking, etc. shall be heavy-duty machine tool type.
2. Contacts shall be 4-pole and be field interchangeable to either normally-open or normally- closed. Relay shall be capable of accepting a 4-pole adder.
3. AC relays shall have NEMA A600 contact ratings and electrical clearances for 600 volts. DC relays shall have NEMA P300 contact ratings and electrical clearances for 250 volts.
4. Manufacturer: Allen Bradley Bulletin-700, Square D Class 8501, or approved equal.

B. Logic Level Switching Control Relays:

1. Control relays for signal circuits shall have a minimum of three SPDT, gold-flashed, fine silver contacts rated 10-ampere resistive at 120V AC or 28Vdc.
2. Control relays shall be plug-in type with heavy-duty, barrier-protected screw terminal sockets and clear polycarbonate dust cover with clip fastener.

3. AC models shall have neon lamp indicator wired in parallel with coil. DC models shall have LED lamp indicator wired in parallel with coil.
4. Manufacturer: Potter Brumfield series KUP; IDEC Series RH; or approved equal

C. Timers:
1. Multi-function, micro-controller based, socket mounted timing relay.
2. Single functions:
   a. Delay on Make
   b. Delay on Break
   c. Recycle (on time first, equal recycle delays)
   d. Single shot
   e. Interval
   f. Trailing edge single shot
   g. Inverted single shot
   h. Inverted delay on break
   i. Accumulative delay on make
   j. Re-triggerable single shot
3. Dual functions:
   a. Delay on make/delay on break
   b. Delay on make/recycle (on time first, equal recycle delays.)
   c. Delay on make/interval
   d. Delay on make/single shot
   e. Interval/recycle (on time first, equal recycle delays)
   f. Delay on break/recycle (on time first, equal recycle delays)
   g. Single shot/recycle (on time first, equal recycle delays)
   h. Recycle – both times adjustable (on time first)
   i. Recycle – both times adjustable (off time first)
   j. Interval/delay on make
   k. Accumulative delay on make/interval
4. Time delay range, switch selectable:
   a. Single function 0.1 second to 1,705 hours in 8 ranges.
   b. Dual function 0.1 second to 3,100 minutes in 8 ranges.
   c. Setting accuracy +/- 1 percent or 50 milliseconds, whichever is greater.
   d. Repeat accuracy +/- 0.1 percent or 16 milliseconds, whichever is greater.
5. Output:
   a. Two Form-C electromechanical isolated contacts rated 10-amperes resistive at 240Vac
   b. Rated 1/3-horsepower at 120 or 240Vac
   c. Double-pole double-throw: DPDT.
   d. Mechanical life: 10,000,000 operations

6. Electrical life: 1,000,000 operations at full load.
   Mounting: Magnal Plug 11-pin socket
7. Environment: -20 to +65 degree C.
8. Manufacturer:
   a. ABB / SSAC's multifunction type TRDU time delay relay with dip-switch function setting with 12Vdc, 24Vac, 120Vac, 240Vac inputs as required or indicated or approved equal.

D. Alternating Relay:
   1. Alternate assignment between "Duty" and "Stand-by" at the end of each run cycle.
   2. Double-pole, double-throw output relay rated for 7-amps inductive at 120-volts AC. Isolation not less than 1,500-volt RMS input to output.
   3. Life of 1,000,000 operations at full electrical load.
   4. Switch to select alteration or continuous operation of either load.
   5. Mount in Magnal 11-pin socket.
   6. Operating temperature range of –20 to +60-degree C.
   7. Manufacturer: ABB-SSAC type ARP series or Engineer accepted substitute.

E. Motor Driven Timers- On Delay and Off-Delay:
   1. Time Delay Relay - Upon Energization (TDE) or Upon De-Energization (TDDE): TDE driven by a 120 Vac synchronous motor that starts timing when initiated by an external signal via closing a dry contact.
   2. Turn a knob on the front of the dial for time settings.
   3. TDE device will reset upon power failure. TDDE device will not reset upon power failure. Special configuration where specified: will not reset upon power failure.
   4. Provide a pilot light visible from the front of the timer to indicate when the timer motor is energized. Provide visual indication by a cycle progress pointer that advances to zero from the setting then back to zero as time progresses.
   5. Provide two of "instantaneous" NEMA Form-C output contacts that actuate when the timing is initiated. Provide two "delayed" NEMA Form-C contacts that actuate when the unit has timed out or de-energized.
   6. The timer automatically resets, when the timing cycle is completed. Contact ratings: 10-ampere at 120 Vac and 5-ampere at 240 Vac.
   7. Permanently mount and setup the timer with the initial settings shown or specified. Timer range with 16 configurations from 5-seconds to 60-hours. Range and timer setpoints shown on drawings.
   8. Timer Manufacturer: Eagle Cycl-Flex Automatic or Manual Reset Timer: HP5 series or HP5E series; Automatic Timing Controls, Series 305D Motor Driven Analog Reset; or approved equal.

2.03 HORNS AND BEACONS

A. The alarm beacon shall be a 75-watt sealed-beam lamp with motor driven rotating reflector; Beacon shall be for 120-volt AC service and shall be Federal Signal Model 191XL or approved equal.

B. The horn shall be a surface mount 120-volt AC enclosed buzzer and shall be Federal Signal Model WB350 (NEMA 4X); Model 31X (NEMA 7) or approved equal.

C. The above equipment shall be NEMA 4 and or NEMA 7 to meet the respective area classification.

D. Each horn and beacon located standalone shall include a 6 x 10-inch Red with white letter lamacoid nameplate with the specific warning such as the following:
   1. DANGER GAS
   2. VENTILATION SYSTEM FAILURE
   3. As needed for each application.

2.04 MAGNETIC CONTACTORS

A. Lighting Contactor:
   1. Lighting contactors shall be 100 percent rated for ballast and tungsten lighting, resistance and other non-motor loads.
   2. Contactor shall be rated 600Vac, 60-Hertz with the ampere rating and number of poles as indicated on the drawings.
   3. Provide a minimum of two poles per NEMA ICS 2-211B for industrial-duty applications.
   4. The following options shall be available and shall be provided as indicated on the drawings:
      a. Auxiliary contacts rated 5-amperes at 600Vac.
      b. Timer or time clock attachment.
      c. Transient suppression module for 120Vac control circuits.
      d. Electrically or mechanically held as specified.
   5. Contactors shall be provided with disconnecting means and overcurrent protection mounted in the same enclosure.
   6. Manufacturers:
      a. Allen Bradley Bulletin 500L or 500LP
      b. Square D Class 8903
      c. ASCO 918 Remote Control with control module
      d. Or approved equal.

B. Motor Contactors:
   1. Motor contactors shall be designed for continuous operation of induction motors at 600Vac or less at 60-Hertz and shall comply with NEMA ICS 2-210.
   2. Unless otherwise specified or indicated on the electrical drawings for the NPV Project, minimum contactor size shall be NEMA Size-1.
   3. Motor contactors shall be supplied with a normally open auxiliary contact for use as a hold-in-contact and status contacts with a minimum of two additional Form-C contacts.
   4. Provide 120Vac coil voltage and 60-Hertz frequency with the number of poles and auxiliary contacts as indicated.

a. Manufacturer: GE, ABB, Allen Bradley, Square D, Eaton-Cutler Hammer or approved equal.

5. Provide solid-state overloads relays with one alarm contact. Where specified and shown as E-SSOL, provide the electronic SSOL relay: Automatic Timing and Controls (ATC) Motor Guardian for alarming and tripping on under-current, over-current, single-phase, ground-fault, motor-jam conditions.
6. Provide ATC current transformers and voltage connections.
   a. Manufacturer: ATC Lancaster, PA. Model: Motor Performance Analyzer; or approved equal.

2.05 SAFETY DISCONNECT SWITCHES

A. Safety disconnect switches shall be heavy-duty, 30-400-ampere ratings as indicated, stainless steel operator, safety type rated 600 volts AC. Provide circuit breaker type.

B. Provide fusible disconnect switches with ratings as indicated with built-in fuse pullers. Provide LPS, LPN, or LPJ 200KAIC current limiting fuses as appropriate for the circuit type and the circuit voltage.

C. Enclosure locations and ratings:
   1. Indoor enclosures: NEMA 12
   2. Outdoor or corrosive areas: NEMA 4X nonmetallic for chlorine storage areas, or stainless steel.
   3. Hazardous areas: NEMA 7
   4. Classified areas: Suitable for the specified classification.

D. The operating handle shall be capable of being padlocked in the "off" position. The operator shall be a positive, quick-make, quick-break mechanism.

E. Provide bolt-on hubs. Provide door lock. Provide nameplates with the equipment tag number, equipment description, and power source as indicated on the drawings. Submit nameplate list.

F. Switches shall be horsepower rated for motors and shall comply with NEMA KS-1. Switches shall be provided with defeatable door interlocks that prevent the door from opening when the operating handle is in the "on" position. Switches shall have line terminal shields.
   1. Manufacturer: Allen Bradley, ABB, Cutler-Hammer, General Electric, Square-D, or approved equal.

2.06 OVERCURRENT PROTECTION

A. Circuit Breakers: Circuit breakers shall be thermal magnetic, molded case type with the ampere rating as specified. Unless otherwise specified or indicated, circuit breaker interrupting rating shall be 65,000 amperes symmetrical.

2.07 ELAPSED TIME INDICATORS

A. Elapsed time indicators shall be panel mounted, non-resettable, 5.5-digit, hour indicator, rated 120Vac, 60-Hertz.

2.08 TERMINAL STRIPS, BLOCKS, AND DEVICES

A. Power Wiring: Provide back plate mounted terminal strips rated at 600 Vac.

B. Control Wiring: Provide a DIN rail with spring powered contact rated at 300 Vac 24 ampere with pluggable terminals.

C. Terminal identification standard to the product provided.

D. Manufacturer:
   1. Standard: Allen Bradley or approved equal.
   2. Standard: DIN rail: Phoenix Contact or Weidmuller Z-Series.

2.09 THERMOSTATS

A. Thermostats shall be line voltage type with motor current rated contact and 70-degree to 140-degree Fahrenheit setpoint range.
   1. Manufacturer: Honeywell T631A-1022 or approved equal.

2.10 STATIC GROUND INDICATOR

A. Provide a static ground indicator and interlock system for verification of static ground connection to plant equipment, tanker trucks, drums, containers with flammable liquids or powders that are transferred and requiring effective grounding and bonding.

B. Provide an explosion proof controller that meets NFPA 77 requirements with an intrinsically safe monitoring circuit that verifies a low resistant ground connection and dissipation path to ground.

C. Product shall include an indicator light and interlock enabling product transfer and shall be rated for 120Vac power circuit.
   1. Manufacturer: Earth-Rite Plus with Hytrel Cable and Ground Clamp or approved equal.

2.11 UNINTERRUPTIBLE POWER SYSTEM (UPS)

A. This paragraph specifies requirements for uninterruptible power supply (UPS) systems consisting of a battery charger, battery, rectifier inverter, and bypass line transfer switch. The uninterruptible power supply shall be an on line, computer-grade system with isolated neutral. The uninterruptible power supply system shall use a double conversion to provide isolation and power conditioning under normal operation. When power the fails, an inverter shall provide AC power from batteries through the transformer to provide continuous uninterrupted power. Uninterruptible power supply

systems shall be as manufactured by Best Power Technology, Inc., Necedah, American Power Conversion, Wisconsin, or approved equal.

B. The UPS shall be completely isolated from the incoming 240 Vac power with less than 2 pf of effective capacitance. It shall qualify as a separately derived power source per NEC article 250 5D. The unit shall suppress surges as described by IEEE 587A and B to safe levels. Output voltage regulation shall be ±3 percent maximum single harmonic and 5 percent total harmonic distortion at 240 Vac. Frequency distortion shall not exceed ±0.5 hertz. Operating condition shall be 0 to 40 degrees C at 95 percent relative humidity, noncondensing.

C. LED indicators shall be provided on the front of the cabinet for systems status and alarms. Include status contacts, dry contacts for UPS Fail and UPS On, to monitor the UPS status on the SCADA system.

D. The UPS shall provide continuous unity power factor with no interruption from line to inverter and return. The UPS shall be capable of delivering 125 percent of rated capacity for 10 minutes and shall have a surge capability of 150 percent. Unit shall be sized with 25 percent spare capacity. Submit load calculations for review.

E. Battery: Batteries shall be maintenance-free, sealed type, installed in cabinet. Provide 30 minutes of battery backup at full load.

F. Battery Charger: The battery charger shall be the constant voltage type and shall provide equalization capability with a manually initiated timer.

G. Transfer Switch: No-break transfer line to inverter and return. UPS shall be able to be switched to the utility source bypassing the UPS should service be required.

H. Inverter: The inverter system shall be low frequency pulse width modulated type using power MOSFETS.

I. The UPS shall have 120/240V hardwired output to a distribution panelboard.

2.12 NAMEPLATES

A. Nameplates for all control stations, relays, timers, motor contactors and disconnect switches shall be provided in accordance with the requirements of Section 26 05 00-2.04.

2.13 PRODUCT DATA

A. Operation and maintenance data as specified in Section 01 78 23 including approved submittal manufacturer's catalog data, as-built drawings, and instructions for all configurable or programmable components.

PART 3 EXECUTION

3.01 INSTALLATION

A. Control stations, contactors and safety disconnect switches shall be mounted 48 inches above the floor, ground, or slab to center of device.

B. Miscellaneous electrical devices shall be tested in accordance with Section 26 05 00 and Section 26 08 00.

END OF SECTION

SECTION 26 22 00
LOW-VOLTAGE TRANSFORMERS

PART 1 GENERAL

1.01 DESCRIPTION

A. This section specifies dry-type transformers with primary winding rated 600 volts and less used for power distribution, lighting and control purposes as specified or shown.

B. This section specifies mini-power centers that include the primary transformer protection, transformer, secondary protection and a circuit breaker panel in one package.

C. This section specifies K-Rated transformer with electro-magnetic shielding.

1.02 REFERENCES

A. This section contains references to the following documents. They are a part of this section as specified and modified. Where a referenced document contains references to other standards, those documents are included as references under this section as if referenced directly. In the event of conflict between the requirements of this section and those of the listed documents, the requirements of this section shall prevail.

B. Unless otherwise specified, references to documents shall mean the documents in effect at the time of Advertisement for Bids or Invitation to Bid (or on the effective date of the Agreement if there were no Bids). If referenced documents have been discontinued by the issuing organization, references to those documents shall mean the replacement documents issued or otherwise identified by that organization or, if there are no replacement documents, the last version of the document before it was discontinued. Where document dates are given in the following listing, references to those documents shall mean the specific document version associated with that date, regardless of whether the document has been superseded by a version with a later date, discontinued or replaced.

Reference	Title
ANSI/IEEE C57.12.01	General Requirements for Dry-Type Distribution and Power Transformers
ANSI/UL 506	Specialty Transformers
DOE	10 CFR Part 431 Efficiency Standards
NEMA ST20	Dry-Type Transformers for General Application

1.03 RATINGS AND STANDARDS

A. Transformers rated:
   1. 10 kVA and smaller shall be single phase or as indicated.
   2. 15 kVA and greater shall be 3 phase or as indicated.

3. Voltage, frequency, number of phases and kVA as indicated.
4. Conform to ANSI/IEEE C57.12.01, DOE 10 CFR Part 431 Efficiency Standards, NEMA ST20, and ANSI/ UL 506.

1.04 SUBMITTALS

A. The following submittals shall be provided in accordance with Section 01 33 00:
   1. Manufacturer's data.
   2. Dimension and rating data.

PART 2 PRODUCTS

2.01 MANUFACTURERS

A. The Owner and Construction Manager believe the following candidate manufacturers are capable of producing equipment and/or products that will satisfy the requirements of this Section. This statement, however, shall not be construed as an endorsement of a particular manufacturer's products, nor shall it be construed that named manufacturers' standard equipment or products will comply with the requirements of this Section. Candidate manufacturers include:
   1. ABB
   2. Eaton Cutler-Hammer
   3. Siemens
   4. Square D
   5. or approved equal.

Ambient Temperature	+ Winding Temperature Rise	+ Hot Spot	= Temperature Class
40-d C	80-d C	30-d C	150-d C
40-d C	115-d C	30-d C	185-d C
40-d C	150-d C	30-d C	220-d C

2.02 INSULATION

A. Transformers temperature rise based on 40-degree C ambient temperature:
   1. 15 kVA and above: Not exceed 115 degree C temperature rise.
   2. below 15 kVA: Not exceed 115 degree C temperature rise.

2.03 COILS

A. Transformer coils:
   1. Copper
   2. 15 kVA and above:
      a. Impregnated with varnish.
   3. 10 kVA and below:

a. Encapsulated.

2.04 WINDING CONFIGURATION

A. Transformers shall have electrically isolated primary and secondary windings. Primary and secondary winding configurations shall be as specified or shown. Provisions shall be made to permit separate grounding of the neutral conductor and the enclosure. Single-phase transformers shall be the four winding type.

2.05 TRANSFORMER TAPS

A. Transformers 15 kVA and above shall be provided with two 2-1/2 percent full capacity taps above normal voltage and four 2-1/2 percent full capacity taps below rated voltage on the primary winding.

2.06 TERMINAL COMPARTMENTS

A. Terminal compartments shall be sized to permit termination of cables specified. Terminal connections shall be made in the bottom third of the enclosure. The terminals shall be copper and sized for the cable specified.

2.07 ENCLOSURES

A. Transformers enclosures:
   1. 15 kVA and smaller: Weatherproof, nonventilated enclosures.
   2. Indoor over 15 kVA: Dripproof, ventilated enclosures.
   3. Outdoor: Weatherproof enclosures.

2.08 MOUNTING

A. Transformers 25 kVA and below shall be suitable for wall mounting and include mounting brackets and hardware. Transformers over 25 kVA shall be floor mounting type.

2.09 NAMEPLATES

A. Nameplates shall be provided in accordance with the requirements of Section 26 05 00-2.04.

2.10 SOUND LEVELS

A. The sound levels shall not exceed the following values:

kVA	dB
0 - 9	40
10 - 50	45
51 - 150	50
151 - 300	55
301 – 500	60

kVA	dB
501 – 700	62
701 - 1000	64

2.11 MINI-POWER CENTERS

A. Mini-power center (MPC) consists of an encapsulated dry-type transformer, primary and secondary main circuit breakers, and secondary panelboard all in one enclosure.

B. Transformer Rating: KVA, primary voltage, secondary voltage, frequency and number of phases shall be as shown on the Drawings.

C. Branch Circuits: Molded case circuit breakers, plug-in thermal magnetic type with number of poles and trip ratings as shown on the Drawings.

D. Enclosure: Weatherproof, NEMA 4X.

E. Manufacturer:
   1. ABB
   2. Acme Electric Corporation
   3. Eaton Cutler Hammer
   4. Siemens
   5. Schneider - Square D Company
   6. or approved equal

2.12 NON-LINEAR LOAD K-FACTOR RATED TRANSFORMER

A. Type: 100 percent non-linear load rated specifically designed to handle non-linear loads with double size neutral for harmonic load.

B. K Factor: K= 4 or as shown on the Drawings.

2.13 SHIELDED ISOLATION TRANSFORMER

A. Provide self-cooled two winding type transformer with electrical ratings as shown.

B. Provide copper or aluminum metal shielding between primary and secondary windings.

C. Provide electro-static winding shield grounded to the transformer case.

2.14 PRODUCT DATA

A. The following information shall be provided in accordance with Section 01 33 00:
   1. Manufacturer's verification that the unit has been built and tested in accordance with the specified ANSI standards.

2. Manufacturer's verification of the sound levels, if different from the specified NEMA ST20 standards.
3. Applicable operation and maintenance information as specified in Section 01 78 23.
4. Manufacturer's product literature.

PART 3 EXECUTION

3.01 GENERAL

A. Bond transformer enclosures and neutrals together and connect to the ground grid.

3.02 INSTALLATION

A. Install transformers on walls or floors at locations shown on the Drawings. Install floor mounted transformers on raised concrete bases. Provide sufficient access and working space for ready and safe operation and maintenance.

B. Mount transformers so that vibrations are not transmitted to the structural parts of the building or to other equipment. Make connections to transformers with flexible conduit.

C. Adjust tap settings to provide proper voltage at panelboards.

D. Ground transformer in conformance with the National Electrical Code.

3.03 TESTING

A. Transformers shall be tested in accordance with Section 26 08 00.

END OF SECTION

THIS PAGE INTENTIONALLY LEFT BLANK

SECTION 26 24 16
PANELBOARDS

PART 1 GENERAL

1.01 DESCRIPTION

A. Three phase, four wire 208Y/120 or 480Y/277 volt, dead front, circuit breaker type panelboard with current rating of 600-amperes or less.

B. Single phase, three wire 120/240 volt, dead front, circuit breaker type panelboards with current rating of 400-amperes or less.

C. Provide metal oxide varistor (MOV) surge protective device (SPD) with disconnect integral within each panelboard that indicates the status and condition of the SPD, tested per NEMA LS-1, rated IEEE C3 Combined Wave of 20kV and 10kA with 200kAIC internal fusing and listed / labeled per UL 1449. Minimum surge rating: 160kA per phase.

1.02 REFERENCES

A. This section contains references to the following documents. They are a part of this section as specified and modified. Where a referenced document contains references to other standards, those documents are included as references under this section as if referenced directly. In the event of conflict between the requirements of this section and those of the listed documents, the requirements of this section shall prevail.

B. Unless otherwise specified, references to documents shall mean the documents in effect at the time of Advertisement for Bids or Invitation to Bid (or on the effective date of the Agreement if there were no Bids). If referenced documents have been discontinued by the issuing organization, references to those documents shall mean the replacement documents issued or otherwise identified by that organization or, if there are no replacement documents, the last version of the document before it was discontinued. Where document dates are given in the following listing, references to those documents shall mean the specific document version associated with that date, regardless of whether the document has been superseded by a version with a later date, discontinued or replaced.

Reference	Title
IEEE	Institute of Electrical and Electronic Engineers
NEMA	National Electrical Manufacturing Association
NFPA 70	National Electrical Code (NEC)
UL 50	Cabinets and Boxes
UL 67	Underwriters Laboratories, Electric Panelboards
UL 489	Molded-Case Circuit Breakers and Circuit Breaker Enclosures
UL 1449	Surge Suppression Devices

PART 2 PRODUCTS

2.01 MANUFACTURERS

A. The Owner and Construction Manager believe the following candidate manufacturers are capable of producing equipment and/or products that will satisfy the requirements of this Section. This statement, however, shall not be construed as an endorsement of a particular manufacturer's products, nor shall it be construed that named manufacturers' standard equipment or products will comply with the requirements of this Section. Candidate manufacturers include:

1. Eaton / Cutler-Hammer: PRL1a and PRL3a with internal Surge Protective Device
2. Siemens: S1, SE, and S3 with internal Surge Protective Device
3. Square D: NQOD and NF with internal Surge Protective Device
4. or approved equal

2.02 ARRANGEMENT AND CONSTRUCTION

A. The front of the panel shall have concealed trim clamps and hinges. The locks shall be flush with cylinder tumbler-type with spring loaded door pulls. The fronts shall not be removable with doors in the locked position. Panelboard locks shall be keyed alike.

B. Gutter space shall be provided on all sides of the breaker assembly to neatly connect and arrange incoming wiring.

C. Panelboard shall be composed of individually mounted circuit breakers designed to be removable without disturbing other breakers.

D. A directory holder with clear plastic plate and metal frame shall be mounted on the inside of the door.

2.03 BUS

A. Bus shall be tin-plated copper and shall have current ratings as shown on the panelboard schedules, sized in accordance with UL 67. Ratings shall be determined by temperature rise test.

B. The minimum bus size shall be 100 amperes. Panel fault withstand rating shall be not less than the interrupting rating of the smallest circuit breaker in the panel. Series rating is prohibited.

C. Panelboards shall be provided with a separate ground bus and, where specified, with a full capacity neutral bus. The neutral bus shall be mounted on insulated stand-offs.

2.04 CIRCUIT BREAKERS

A. Circuit breakers shall be molded-case type provided for the current ratings and pole configurations specified on the panelboard schedule. Circuit breakers shall be bolt-on type. Circuit breakers shall be listed in accordance with UL 489 for the service specified. Load terminals of circuit breakers shall be solderless connectors.

B. Circuit breakers rated 120/208 volt and 120/240 volt alternating current shall have a minimum interrupting current rating of 18,000 amperes symmetrical at 240 volt AC.

C. Circuit breakers rated 277/480 volt alternating current shall have a minimum interrupting current rating of 25,000 amperes symmetrical at 480 volt or as specified on the panelboard schedule.

D. Provide circuit breakers with special features such as ground fault interrupting (GFI), heating air conditioning and refrigeration (HACR) rating, or locking capability as shown on the Drawings or Schedules.

2.05 FINISH

A. Panelboard cabinet shall be fabricated from hot-dip galvanized steel in accordance with UL 50. Panelboard fronts shall have a gray, baked enamel finish.

2.06 NAMEPLATES

A. Nameplates shall be provided in accordance with the requirements of Section 26 05 00.

2.07 PRODUCT DATA

A. The following information shall be provided in accordance with Section 01 33 00:
   1. Manufacturer's certification that bus bracing is capable of withstanding the specified short circuit condition.
   2. Operation and maintenance information as specified in Section 01 78 23.
   3. Quantity and rating of circuit breakers provided with each panelboard.

PART 3 EXECUTION

3.01 GENERAL

A. The Contractor shall type in the circuit description on the circuit directory as shown on the final record drawings or panelboard schedule.

B. Provide “Circuit Directory and Circuit Identification” in accordance with NEC 408.4. Each circuit shall be of sufficient detail to allow each circuit to be distinguished from other circuits. Circuit identification shall include load location and provide equipment or instrument Tag Number and Tag Description, where shown on the drawings.

3.02 TESTING

A. Panelboards shall be tested for proper operation and function.

END OF SECTION

THIS PAGE INTENTIONALLY LEFT BLANK

SECTION 26 24 19
MOTOR-CONTROL CENTERS

PART 1 GENERAL

1.01 DESCRIPTION

A. Scope:
1. This section specifies freestanding, factory assembled 600 (480) volt Motor Control Centers (MCC) with digital power monitors to display the voltage and current load parameters.

B. Equipment List:
1. MCCs specified on the drawings and herein shall be furnished by a single manufacturer.

1.02 QUALITY ASSURANCE

A. References:
1. This section contains references to the following documents. They are a part of this section as specified and modified. Where a referenced document contains references to other standards, those documents are included as references under this section as if referenced directly. In the event of conflict between the requirements of this section and those of the listed documents, the requirements of this section shall prevail.
2. Unless otherwise specified, references to documents shall mean the documents in effect at the time of Advertisement for Bids or Invitation to Bid (or on the effective date of the Agreement if there were no Bids). If referenced documents have been discontinued by the issuing organization, references to those documents shall mean the replacement documents issued or otherwise identified by that organization or, if there are no replacement documents, the last version of the document before it was discontinued. Where document dates are given in the following listing, references to those documents shall mean the specific document version associated with that date, regardless of whether the document has been superseded by a version with a later date, discontinued or replaced.

Reference	Title
ANSI/NEMA ICS 1	Industrial Control Systems: General Requirements
ANSI/NEMA ICS 18	Motor Control Centers
NFPA 79	Electrical Standards for Industrial Machinery
UL 845	Motor Control Centers

B. Codes And Standards:
1. Motor Control Centers and all components shall be Underwriters Laboratory listed to UL 845 and shall conform to NEMA ICS-1 and ICS-18 standards.

1.03 SUBMITTALS

A. The following information shall be provided in accordance with Section 01 33 00:
   1. A copy of this specification section, with addendum updates included, and all referenced and applicable sections, with addendum updates included, with each paragraph check-marked to indicate specification compliance or marked to indicate requested deviations from specification requirements.
   2. A check mark (□) shall denote full compliance with a paragraph as a whole. If deviations from the specifications are indicated, and therefore requested by the CONTRACTOR, each deviation shall be underlined and denoted by a number in the margin to the right of the identified paragraph, referenced to a detailed written explanation of the reasons for requesting the deviation.
   3. Elementary connection and interconnection diagrams as required in paragraph 2.07, in accordance with NFPA 79 and/or NEMA ICS 18 Part 1 standards.
   4. Time current curves for all protection devices.
   5. List of starters and feeder tap compartments indicating the size and type of circuit protection.
   6. Interrupting, withstand, and continuous current rating of:
      a. Bus bars
      b. Feeder tap units
      c. Starter units
      d. Main incoming units
   7. Nameplate schedule.
   8. Dimensioned drawings showing conduit access locations.
   9. Front view elevation with starter and component schedule.

PART 2 PRODUCTS

2.01 MANUFACTURERS

A. The Owner and Construction Manager believe the following candidate manufacturers are capable of producing equipment and/or products that will satisfy the requirements of this Section. This statement, however, shall not be construed as an endorsement of a particular manufacturer's products, nor shall it be construed that named manufacturers' standard equipment or products will comply with the requirements of this Section. Motor Control Centers shall be as manufactured by Rockwell Automation, Schneider Electric, Eaton or approved equal.

2.02 SERVICE

A. Motor control centers shall be rated 480 volts, 60 Hertz, 3 phase, 3 wire (no neutral bus) as specified or indicated, suitable for operation at the specified voltages and short circuit capacities.

2.03 STRUCTURE AND CONSTRUCTION

A. Structure:

1. Motor control centers shall be made of No. 14 gage steel minimum and, unless otherwise shown, each section shall be 90 inches high by 20 inches wide by 20 inches deep.
2. Each section shall have 78 inches for stacking starter units into the sections.
3. The compartments shall have pan-type doors with a minimum of two quarter-turn hold-down latches; and neoprene gaskets.
4. A full height vertical wireway, 4 inch wide minimum, but not less than 30 square inches in cross section, shall be provided for each vertical motor control center section. The wireway shall contain full height removable doors. Horizontal wireways shall be provided top and bottom, extending the length of motor control centers.
5. Bottom channel sills shall be mounted front and rear of the vertical sections extending the full length of the motor control center lineup. A removable lifting angle shall be mounted on top and shall extend the width of the motor control center lineup.

B. Construction:
1. Motor control centers located indoors shall have NEMA 1, gasketed enclosures.
2. Motor control centers located outdoors shall be in a NEMA-3R weatherproof non-walk-in enclosure.
3. Starter units, size 4 and smaller, and feeder tap units less than 225 amperes shall be plug-in construction with hardened, tin-plated copper free-floating stabs, steel spring backups. The door shall have interference tabs which prevent door closure if unit is improperly installed.
4. Units shall be latched in the position to assure proper bus contact. The unit disconnect device shall be interlocked to prevent removal or reinsertion of a unit when the disconnect is in the "ON" or "TRIPPED" positions.
5. Fusible switch or circuit breaker disconnect operators shall be capable of accommodating three padlocks for locking in the "OPEN" position.
6. Hardware for mounting future starter and feeder tap units shall be provided at compartments specified as "FUTURE."

C. Seismic Bracing:
1. Motor control centers and related equipment shall conform to the seismic anchorage and bracing requirements of Section 01 88 15.
2. At a minimum requirement, the Motor Control Centers shall be braced for Seismic Zone 4 as defined by the latest version of the Uniform Building Code.

2.04 FINISH AND COLOR

A. The finish and color shall be in accordance with Section 26 05 00.

2.05 BUS

A. General:
1. Bus shall be tin-plated copper with bolted connections between vertical and horizontal bus bars. Access for tightening these connections shall be from the

front, without the need for tools on the rear of the connection. Insulated horizontal and vertical bus barriers shall be provided. Barriers shall be fabricated from high-strength, glass-filled polyester resin.

2. The bus shall be braced to withstand a fault current as shown on the drawings or minimum 42,000 amperes, RMS, symmetrical.

B. Horizontal Bus:

1. Unless otherwise specified or shown, the main horizontal bus shall be rated a minimum 600 amperes continuous.

C. Vertical Bus:

1. Unless otherwise specified or shown, the vertical bus shall be insulated and rated a minimum 300 amperes continuous.

D. Neutral Bus: (NOT USED)

1. The neutral bus shall be provided and have the same rating as the main horizontal bus, where specified or shown.

E. Ground Bus:

1. A 1/4-inch by 2-inch ground bus shall be provided the full length of the motor control center. Ground bus shall be located at the bottom of the motor control center. Provide a lug to terminate a bare 4/0 AWG copper ground conductors at each end of the ground bus.

2.06 WIRING

A. General:

1. Motor control centers shall be provided with NEMA ICS 18 Class II, Type B wiring. All starter units shall have terminal blocks for control wiring. Terminal blocks shall be provided for power wiring for starters size 2 and smaller.
2. Motor control centers shall be provided with all necessary interconnecting wiring and interlocking.
3. Provide elementary and connection diagrams for each starter unit and an interconnection diagram for the entire motor control center.

B. Power Wire:

1. Power wire shall be copper 90 degrees C insulated, sized to suit load; minimum power wire size shall be No. 12 AWG copper stranded.

C. Control Wire:

1. Control wire shall be No. 16 AWG stranded copper wire, rated 90 degrees C machine tool wiring (MTW) and UL listed for panel wiring.

D. Terminations and Cable Connections:

1. Terminals:
   a. Control wiring shall be lugged with ring-tongue or locking spade crimp type terminals made from electrolytic copper, tin-plated.

2. Cable Connectors:
   a. Cable connectors for use with stranded copper wire, sizes No. 8 AWG to 1000 kcmil shall be UL listed. Dished conical washers shall be used for each bolted connection. Connectors shall be reusable and shall be rated for use with copper conductors. Incoming line and outgoing feeder compartments shall be provided with crimp type lugs, 3M Company, Burndy Company, or approved equal.

E. Conductor Markers:
1. Each power and control conductor shall be identified at each terminal to which it is connected. Conductors size No. 10 AWG or smaller shall have identification sleeves. Conductors No. 8 AWG and larger shall use cable markers of the locking tab type. Tabs shall be white plastic with conductor identification number permanently embossed.
2. Adhesive strips are not acceptable.
3. The letters and numbers that identify each wire shall be machine printed on sleeves with permanent black ink with figures 1/8 inch high. Sleeves shall be yellow or white tubing and sized to fit the conductor insulation. Shrink the sleeves with hot air after installation to fit the conductor.

2.07 MAIN AND FEEDER CIRCUIT PROTECTION

A. General:
1. Main and feeder tap units shall consist of fused disconnect switches or circuit breakers, as specified or shown. Series ratings for overcurrent devices to meet specified short circuit withstand ratings is prohibited.

B. Circuit Breakers (Thermal Magnetic):
1. Thermal-magnetic circuit breakers shall be molded case equipped with toggle type handle, quick-make, quick-break over center switching mechanism that is trip-free so that breaker cannot be held closed against short circuits and abnormal currents. The tripped position shall be clearly indicated by breaker handle maintaining a position between "ON" and "OFF." All poles shall open, close, and trip simultaneously.

2.08 MOTOR STARTER UNITS

A. General:
1. Motor starter units shall be combination type with contactor and fused disconnect switch, thermal magnetic circuit breaker, or motor circuit protector, and solid-state overload unit as indicated on the drawings or specified in the MCC schedule.

B. Motor Circuit Protectors:
1. The molded case motor circuit protector (MCP) shall operate on the magnetic principle with a current sensing coil in each of the three poles to provide an instantaneous trip for short circuit protection. The trip setting shall be adjustable from 700 to 1300 percent of the motor full load amperes from the front of the MCP. The motor circuit protector shall be set at its lowest position at the factory.

C. Control Transformers:

1. Each control transformer shall be rated 480/240-120V, single phase, 2-wires, 60 Hertz. The transformer shall be sized for the load it feeds but shall not be less than the minimum ratings as follows:

NEMA starter size	Minimum transformer volt-ampere rating
1	100
2	150
3	200
4	300

2. Each control transformer shall be provided with time-delay, slow-blow secondary fuse rated to interrupt 10,000 amperes short circuit at 250 volts AC. Two primary fuses rated to interrupt 200,000 amperes at 600 volts shall be provided on all starters.
3. Fuse holder for secondary fuse shall be drawout indicating type and mounted on the door of the compartment. Fuse holders for primary fuses shall be fuse clips with full barriers between fuses.

D. Contactors:

1. Unless otherwise specified or shown, contactors shall be full voltage, 3-pole, 600 volt AC, NEMA Size-1 minimum. Contacts shall be double break, silver-cadmium oxide, and weld resistant. Contacts shall be isolated to prevent arcing. Coils and magnets shall be capable of being removed or replaced without special tools. IEC contactors are prohibited.
2. Reversing, multispeed, and reduced voltage starters shall have additional contactors, overload relays, and auxiliary relays as required, and shall have mechanically interlocked contactor coils to prevent simultaneous engagement.

E. Surge Protective Device:

1. Provide metal oxide varistor (MOV) surge protective device (SPD) integral within each motor control center that indicates the status and condition of the SPD, tested per NEMA LS-1, rated IEEE C3 Combined Wave of 20kV and 10kA with 200kAIC internal fusing and listed / labeled per UL 1449. Minimumsurge rating: 160kA per phase.
2. Provide a factory selected transient surge suppressor rated for each motor starter and power contactor encapsulated in a small module and mounted directly to the starter or contactor coil.

F. Auxiliary Contacts:

1. Contactors shall be equipped with auxiliary contacts, rated 10 amperes at 120 volts AC. Refer to drawings for actual quantities required. As a minimum, each contactor shall be equipped with two normally open and two normally closed electrically isolated auxiliary contacts with the used and auxiliary contacts wired out to terminal blocks.

G. Overload Relay:
   1. The solid-state overload relay shall protect the power wiring and motor from excessive overcurrent. The relay shall be ambient compensated and have adjustment from 90 to 110 percent of the normal rating.
   2. The sensing element shall be adjustable Class 20 tripping time of 20-seconds at 600-percent of current setting. The faster overload trip Class 10 (10-seconds at 600-percent of current setting) and the longer overload trip Class 30 (30-seconds at 600-percent of current setting) shall be field set by the installer during the driven equipment startup with the overload settings that are required by the type of motor driven load.

H. Terminal Blocks:
   1. Terminal blocks shall be screw type rated 600 volts; 20 amperes for control wiring and 30 amperes power wiring with starters Size 3 and larger shall terminate the power leads directly to the contactor.
   2. The number of terminal blocks shall be specified on the drawings. Terminal blocks shall be provided with integral marking strips and shall be permanently marked with the conductor number as specified on the drawings. Internal wiring shall be connected on one side of the terminal block; outgoing conductors shall be connected to the other side.

2.09 MISCELLANEOUS

A. General:
   1. Control devices such as pushbuttons, selector switches, indicating lights and overload reset pushbuttons shall be mounted on the unit compartment door.
   2. The control devices shall comply with the requirements of Section 26 09 16.

B. Elapsed Time Indicator:
   1. Where shown or specified, the elapsed time indicator shall be as specified in Section 26 09 16. The indicator shall be mounted on the unit compartment door.

C. Nameplates:
   1. Nameplates shall be provided in accordance with the requirements of Section 26 05 00. Nameplates shall be provided for all cubicles and compartments and identify the load per NEC. A Nameplate shall be provided identifying the motor control center. Provide equipment tag numbers and descriptions as shown on the drawings.

2.10 VARIABLE FREQUENCY DRIVES

A. VFDs mounted in motor control centers shall be flush mounted and shall meet the following requirements.
   1. AFD, ASD, VFD, VSD are interchangeable terms.
   2. Provide variable or constant torque PWM type drives for motors as indicated on the Drawings. MCC mounted AFD's shall not be applied for motors exceeding 60

horsepower. Include circuit breaker disconnecting means, 3-percent line reactors and cooling fans as required to dissipate the heat into the room.

3. Provide ratings as indicated.
4. Provide microprocessor Operator Interface Station (OIS) on the VFD door.
5. EMI/RFI shielding as required for products and wiring.
6. Provide current limiting fuses for short circuit protection.
7. Provide factory technician for setup, startup services, and training.
8. Data communication: Ethernet IP.
9. Provide four Form C relays with 5-ampere contacts for interlocks.
10. Provide four programmable relay outputs for on-off status, alarm, “Remote” mode.
11. Provide isolated 4-20madc analog input for speed control.
12. Provide isolated 4-20madc analog output for speed indication.
13. Provide additional control devices as shown on the Control Schematic drawings.

2.11 SPARE PARTS

A. One set consisting of the following spare parts shall be provided:
   1. 1--set each fuse size and type
   2. 10--indicating light bulbs

2.12 PRODUCT DATA

A. The following information shall be provided in accordance with Section 01 33 00:
   1. Manufacturer's certification that the following items are capable of interrupting and/or withstanding the specified short circuit condition:
      a. Bus bar bracing
      b. Feeder tap units
      c. Starter units
   2. Operation and maintenance information as specified in Section 01 78 23.
   3. Dimensions and weights.
   4. Installation instructions.
   5. Manufacturer's product data.
   6. Seismic anchorage and bracing requirements of Section 01 88 15 and paragraph 2.03 Seismic Bracing.

PART 3 EXECUTION

3.01 GENERAL

A. The motor control centers shall be erected in accordance with the recommendations of the manufacturer and with the details specified herein.

B. Field wiring shall meet the requirements of Section 26 05 19-3.02. Cables larger than No. 6 AWG which hang from their vertical connections shall be supported within 2 feet of the connection.

C. The solid-state overload relay settings shall be implemented by the Contractor with the settings selected based on the actual full load amperes of the motor connected to the starter and the requirements of the motor driven equipment. Refer to the manufacturer's literature for setting the overload relays. Refer to the overload relay paragraph 2.09 Overload Relay for the setting options that available in the overload relay.

D. The motor circuit protectors shall be adjusted by the Contractor to the lowest setting not causing false tripping.

E. Seismic anchorage shall be per Section 01 88 15.

3.02 FIELD TESTS

A. Motor control centers shall be tested in accordance with Section 26 08 00.

END OF SECTION

THIS PAGE INTENTIONALLY LEFT BLANK

SECTION 26 27 26
WIRING DEVICES

PART 1 GENERAL

1.01 DESCRIPTION

A. This Section specifies wiring devices consisting of receptacles, plugs, switches and appurtenances.

1.02 REFERENCES

A. This Section contains references to the following documents. They are a part of this Section as specified and modified. Where a referenced document contains references to other standards, those documents are included as references under this Section as if referenced directly. In the event of conflict between the requirements of this Section and those of the listed documents, the requirements of this Section shall prevail.

B. Unless otherwise specified, references to documents shall mean the documents in effect at the time of Advertisement for Bids or Invitation to Bid (or on the effective date of the Agreement if there were no Bids). If referenced documents have been discontinued by the issuing organization, references to those documents shall mean the replacement documents issued or otherwise identified by that organization or, if there are no replacement documents, the last version of the document before it was discontinued. Where document dates are given in the following listing, references to those documents shall mean the specific document version associated with that date, regardless of whether the document has been superseded by a version with a later date, discontinued or replaced.

Reference	Title
NEMA 250	Enclosures for Electrical Equipment (1000 volts maximum)
NEMA WD-1	General Requirements for Wiring Devices
NFPA 70	National Electrical Code (NEC)

PART 2 PRODUCTS

2.01 GENERAL

A. Wiring devices shall be UL approved for the current and voltage specified and shall comply with NEMA WD-1. Devices shall contain provisions for back wiring and side wiring with captive binding screws.

B. Provide devices colored to conform to manufacturer's or industry standard for special use such as orange for isolated ground receptacles, blue for surge suppression receptacles, and red for emergency power receptacles. Unless shown otherwise on the Drawings or Schedules, normal use devices shall be brown, except those located in *finished* areas shall be ivory.

2.02 RECEPTACLES AND PLUGS

A. General: Receptacles shall be grounding type.

B. 120V Receptacles:
   1. Indoor, Clean Areas:
      a. Unless shown otherwise on the Drawings or Schedules, receptacles shall be duplex 20 amp, NEMA 5-20R, and shall accept NEMA 5-15P and 5-20P plugs. Where the manufacturer of cord connected equipment requires and isolated ground, a receptacle with isolated ground shall be provided.
         1) Manufactures: Hubbell 5362 or approved equal.
         2) Isolated ground receptacle manufactures: Hubbell IG-5362 or approved equal.
   2. Outdoor, Process or Corrosive Areas:
      a. Receptacle shall be duplex, 20 ampere, NEMA 5-20R, and shall accept NEMA 5-15P and 5-20P plugs. Receptacle and plug shall be corrosion resistant, marine duty with yellow polycarbonate weatherproof lift covers that maintain weatherprofing during receptacle use.
         1) Manufacturers: Hubbell 53CM62/53CM21, 15W33W/O BOX, or approved equal.

C. 250V Receptacles: Receptacles shall be duplex 15 amp, NEMA 6-15R, and shall accept NEMA 6-15P plug caps. Receptacles shall be Hubbell 5662, Arrow Hart 5662, or approved equal. Plug caps shall be Hubbell 5666-C, Arrow-Hart 6866 or approved equal.

D. Plug Caps: Male plug caps for 120 volt and 250 volt receptacles shall be of the cord grip armored type with heavy phenolic housing, of the same manufacture as the receptacle. Plug caps shall be rated 15 amps. One plug cap shall be provided for every four receptacles furnished, with a minimum of two plug caps being provided. Plug caps shall be delivered to the Construction Manager.

E. Three Phase Receptacles and Plugs:
   1. Receptacles shall be suitable for 480 volt, 3-phase, 4-wire service, with ampere ratings as specified. Receptacles and plugs shall be designed so that the grounding pole is permanently connected to the housing. The grounding pole shall make contact before the line poles are engaged when the plug is connected to the receptacle housing. The plug sleeve shall also make contact with the receptacle housing before the line and load poles make contact. Receptacles shall be provided complete with cast back box, angle adapter, gaskets, and a gasketed screw-type, weathertight cap with chain fastener. Each receptacle shall be provided with one plug.
   2. Manufactures: Crouse-Hinds "Arktite," Appleton "Powertite," or approved equal.

F. Receptacles for Hazardous Areas:
   1. Receptacles for use in hazardous areas shall be rated in accordance with NEC for the area in which they are to be located and shall be factory sealed. Receptacles shall be designed so the plug must be inserted and turned before load is energized.

Receptacles shall be provided with mounting box, sealing chamber, and compatible plug. Voltage and current ratings shall be as 120 Vac, 20-ampere.

2. Manufactures: Appleton "U-Line," Crouse-Hinds "Ark-Gard 2," or approved equal.

2.03 SWITCHES

A. General Purpose (Indoor, Clean Areas):

1. General purpose switches shall be quiet AC type, specification grade, back and side wired, and shall be provided in accordance with rated capacities as required or as indicated on Drawings or Schedules. Switches shall match receptacles in color.
2. Manufactures: General Electric, Hubbell, or Construction Manager accepted substitute, as follows:

	15A, 120-277V		20A, 120-277V	
	G.E. Co.	Hubbell	G.E. Co.	Hubbell
Single:	PS 15AC1	HBL1201	PS 20AC1	HBL1221
Three-way:	PS 15AC3	HBL1203	PS 20AC3	HBL1223
Four-way:	PS 15AC4	HBL1204	PS 20AC4	HBL1224
SPST momentary:	# 7842	--	--	--
Three position center off momentary:	# 1250	HBL1556	--	HBL1557

B. Switches for Hazardous Areas:

1. Switches for control of lighting and small single-phase power loads in hazardous areas shall consist of a factory assembled and sealed combination general purpose type switch in an explosion-proof housing. The switch shall be rated in accordance with NEC for the area in which it is to be installed. The external operating mechanism shall consist of a wing-type handle having the "ON" and "OFF" positions visible from the front.
2. Manufactures: Crouse-Hinds EDSC Type, Appleton EDSC Type, or approved equal.

C. Switches for Outdoor and Corrosive Areas:

1. Switches shall be 20-ampere with weatherproof/ corrosion resistant neoprene plate. Switches shall be mounted in "FS" type copper-free aluminum or PVC mounting boxes.
2. Manufactures: Hubbell or Arrow-Hart or approved equal as follows:

	Hubbell with 17CM50 plate	Arrow-Hart with 2881 plate
Single pole	1281	2991
Double pole	1282	2992
3-way	1283	2993

	Hubbell with 17CM50 plate	Arrow-Hart with 2881 plate
4-way	1284	2994

2.04 DEVICE PLATES

A. Device plates shall be provided with switches. In non-corrosive indoor areas, receptacle device plates shall be made of sheet steel, zinc electroplated with chrome finish as manufactured by Crouse-Hinds, Appleton, or approved equal.

B. Device plates in corrosive or outdoor areas shall be corrosion-resistant/marine-duty type. Device plates for explosion-proof equipment shall be factory provided with the equipment.

C. Device plates shall be provided with engraved laminated phenolic nameplates with 1/8-inch white characters on black background.

D. Nameplates for switches shall identify panel and circuit number and area served. Nameplates for receptacles shall identify circuit and voltage if other than 120 volts, single phase.

2.05 PLUG STRIPS

A. Plug strips shall be manufactured of sheet steel with the receptacles mounted on the front cover. The front cover shall be removable.

B. Plug strips for office and laboratory areas shall have single 3 wire, 20 ampere grounding type receptacles mounted along the strip on a single circuit.

C. Plug strips for work benches in shop and laboratory areas shall have 3 wire, 20 ampere grounding type duplex receptacles mounted along the strip on the circuits specified. Sufficient space shall be provided behind the receptacles for ten No. 12 AWG conductors in accordance with the NEC space rules.

1. Manufacture of plug strips: Plugmold, or approved equal.

2.06 PRODUCT DATA

A. In accordance with Section 01 33 00, the Contractor shall provide catalog cuts for all materials provided under this section.

PART 3 EXECUTION

3.01 INSTALLATION

A. Boxes shall be independently supported by galvanized brackets, expansion bolts, toggle bolts, or machine or wood screws as appropriate. Wooden plugs inserted in masonry or concrete shall not be used as a base to secure boxes, nor shall welding or brazing be used for attachment.

B. Receptacles and switches installed in sheet steel boxes shall be flush mounted. Flush mounted receptacles shall be located 18 inches above the floor unless otherwise indicated. Switch boxes shall be mounted 48 inches above the floor. Receptacles installed in cast device boxes shall be located 48 inches above the floor.

C. Wiring devices shall be tested for correct connections.

END OF SECTION

THIS PAGE INTENTIONALLY LEFT BLANK

SECTION 26 36 13
MANUAL TRANSFER SWITCHES

PART 1 GENERAL

1.01 DESCRIPTION

A. This section specifies manual-transfer-switches (MTS) rated 600 volts with ratings specified on the drawings.

1.02 REFERENCES

A. This section contains references to the following documents. They are a part of this section as specified and modified. Where a referenced document contains references to other standards, those documents are included as references under this section as if referenced directly. In the event of conflict between the requirements of this section and those of the listed documents, the requirements of this section shall prevail.

B. Unless otherwise specified, references to documents shall mean the documents in effect at the time of Advertisement for Bids or Invitation to Bid or on the effective date of the Agreement if there were no Bids.

C. If referenced documents have been discontinued by the issuing organization, references to those documents shall mean the replacement documents issued or otherwise identified by that organization or, if there are no replacement documents, the last version of the document before it was discontinued.

D. Where document dates are given in the following listing, references to those documents shall mean the specific document version associated with that date, regardless of whether the document has been superseded by a version with a later date, discontinued or replaced.

Reference	Title
NEMA ICS 6	Enclosures for Industrial Controls and Systems
NEMA ICS 10-1993	AC Transfer Switch Equipment
NEC Article 702	National Electrical Code: Optional Standby Systems
NFPA 70	National Electrical Code
NFPA 110	Standby Power Systems
UL 508	Industrial Control Equipment
UL 1008	Standard for Manual Transfer Switches
UL 1087	Molded Case Switches

1.03 QUALITY ASSURANCE

A. Listing, Labeling, and Manufacturing: The MTS shall conform to Underwriters Laboratory's UL 508 for Industrial Control Equipment and listed or labeled per UL 1008. The MTS enclosure shall be per NEMA Standards ICS 6 and ICS 10.

B. Tests And Certification: The complete MTS shall be factory tested to ensure proper operation of the individual components are in compliance with the specification requirements.

1.04 SUBMITTALS:

A. The following submittals shall be provided in accordance with Section 01 33 00:
   1. Arrangement drawings of the transfer switch enclosure indicating the front door and rear panel equipment arrangement and dimensions.
   2. List of materials and components shall accompany the arrangement drawing.
   3. Elementary and internal connection diagrams.
   4. Manufacturers' data marked to indicate momentary, interrupting, and continuous current ratings.

1.05 WARRANTY

A. Three-way manual transfer switches shall be covered by manufacturer's warranty for a minimum period of (2) two years after shipment from manufacturer.

PART 2 PRODUCTS

2.01 MANUFACTURERS

A. The Owner and Construction Manager believe the following candidate manufacturers are capable of producing equipment and/or products that will satisfy the requirements of this Section.

B. This statement, however, shall not be construed as an endorsement of a particular manufacturer's products, nor shall it be construed that named manufacturers' standard equipment or products will comply with the requirements of this Section.

C. Candidate manufacturers include IEM, ESL Power Systems or approved equal.

2.02 RATING

A. The voltage, current, frequency and number of poles shall be as specified and shown.

B. The MTS shall be rated 600 Vac or less and rated to close onto and withstand a fault of 50,000 symmetrical amperes. The MTS shall be labeled with ratings.

2.03 THREE-WAY MANUAL TRANSFER SWITCHES

A. Three-way manual transfer switch enclosure shall be Type 4X, 316SS, constructed of continuous seam-welded, powder coated steel. The main access shall be through a door that extends the full height of the enclosure. Access for both portable generator cables with female cam-style plugs shall be via cable entry openings at the floor level of enclosure. The door shall allow cable entry only after the main access door has been opened.

B. Three-way manual transfer switch assembly shall consist of (3) mechanically-interlocked switches, male cam-style inlet connectors, female cam-style outlet connectors, power distribution blocks and grounding terminals, all housed within a padlockable enclosure.

C. As per the single line diagram, switch 3 shall control the connections between the two plant power sources. Switch 2 shall control the connection between the switch 3 and switch 1. Switch 1 shall control the connection between the plant power sources and the portable generator male cam-style connectors. All (3) switches shall include UL Listed interlock mechanism, preventing the opening of the main access door unless all (3) switches are in the “OPEN” position. All (3) switches shall be mounted behind a dead front panel. A maintenance bypass switch shall be included to defeat the door opening interlock mechanism.

D. The (3) switches shall be safety interlocked by mechanical means to ensure that only either the two plant power sources or the portable generator can be closed at any given time. All switches shall be “Make after Break”.

E. Cam-style male connectors (inlets) and cam-style female connectors (outlets) shall be UL Listed single-pole separable type and rated 600 amps at 600VAC. All cam-style connectors shall be color coded. Cam-style connectors shall be provided for each phase and for ground, and shall also be provided for neutral. Each of the phase cam-style connectors and the neutral cam-style connectors within the enclosure shall be factory-wired to the appropriate switch. The ground cam-style male connectors shall be bonded to the enclosure, and a ground lug shall be provided for connection of the facility ground conductor. None of the cam-style connectors shall be accessible unless all (3) switches are in the “OPEN” position.

F. The phase and ground cam-style connectors shall be interlocked such that the phase cam-style connectors cannot be connected unless the ground and neutral cam-style connectors are connected first.

G. A power distribution block shall be provided for load-side field wiring. The power distribution block shall be factory wired to the switch.

H. Position indicators switches shall be installed at each of the switches to indicate open/close status and the ability to be wired to the PLC. The position indicator switches shall be rated for 120V and 10A.

I. Position indicator switches shall be equipped with LEDs which have Push to Test capability.

2.04 FACTORY TESTS

A. The MTS shall be factory tested to ensure proper operation.

2.05 NAMEPLATES

A. The switch shall be identified as indicated on the drawings and nameplates shall be provided in accordance with the requirements of Section 26 05 00.

2.06 PRODUCT DATA

A. The following information shall be provided in accordance with Section 01 33 00:
   1. Operating and maintenance information including product data specified in Section 01 78 23.
   2. Finaled reviewed submittal, record drawings, MTS factory and field test included in the O&M data.

PART 3 EXECUTION

3.01 FIELD TESTS

A. The following tests shall be performed on the equipment provided under this section. Tests shall be in accordance with the latest version of UL and NEMA standards.
   1. Electrical insulation check to verify the integrity and continuity of the system
   2. Visual inspection to ensure that the switch matches the specification requirements and to verify fit and finish meet quality standards
   3. Mechanical tests to verify that the switch's power sections are free of mechanical hindrances

B. The manual transfer switch shall be acceptance field tested in accordance with Section 26 08 00.

C. Test the MTS using City provided engine-generator set.

END OF SECTION

SECTION 26 51 19
LED LIGHTING

PART 1 GENERAL

1.01 DESCRIPTION

A. This section specifies light emitting diode (LED) lighting fixtures, features and installation.

B. Terminology used in this Section conforms to the following definitions: Nomenclature and Definitions for Illuminating Engineering Lighting terminology as defined in Illuminating Engineering Society IES RP-16-17.

C. Lighting and controls shall comply with California Energy Commission (CEC) Title 24 Part 6, latest adopted version.

1.02 QUALITY ASSURANCE

A. REFERENCE STANDARDS:
1. This Section incorporates by reference the latest revisions of the following documents as part of this Section insofar as specified and modified herein. In the event of conflict between the requirements of this Section and those of the listed documents, the requirements of this Section shall prevail.
2. References to documents shall are in effect on the effective date of the Agreement. If referenced documents have been discontinued by the issuing organization, references to those documents shall be the replacement documents issued or otherwise identified by that organization or, if there are no replacement documents, the last version of the document, before it was discontinued.

Reference	Title
NFPA 70	National Electrical Code (NEC)

B. SPECIAL WARRANTY: Provide a Special Warranty for LED lightings that shall include the following:
1. The written 5-year on-site replacement includes parts, material, fixture finish and workmanship. Provide on-site fixture replacement includes transportation, removal, and installation of new products.
2. The fixture finish shall include failure or substantial deterioration such as blistering, cracking, peeling, chalking or fading.
3. The replacement material warranty shall include defective or non-starting LED source assemblies and on power supply units.
4. The replacement warranty shall include lighting fixtures producing inadequately maintained illuminance levels at the end of the warranty period, as prorated from levels expected at end of useful life.
5. The warranty period shall begin on the date of Substantial Completion.

6. The Contractor shall provide the Owner with appropriate signed 5-year warranty certificates.
7. The City shall receive these certificates prior to final payment.

1.03 SUBMITTALS

A. PROCEDURES: Section 01 33 00 – SUBMITTAL PROCEDURES.

B. ACTION SUBMITTAL ITEMS FOR THIS SECTION:
1. A copy of this Section, addendum updates included, with each paragraph check-marked to indicate compliance or marked to indicate requested deviations from Section requirements.
2. Manufacturer's descriptive catalog literature for all lighting fixtures and accessories being installed under this section. Catalog information describing fixture make, materials, and dimensions.
3. Information shall include manufacturer, wattage, voltage, mounting configuration, and lamp type. Catalog cuts shall be edited to show only the items, model numbers, and information which apply.
4. Submit applicable data as specified in Section 01 78 23 – OPERATION AND MAINTENANCE DATA.
5. Lighting fixture model numbers are provided on the drawings in the lighting fixture schedule. The manufacturer's catalog numbers listed are examples of the basic model or series.
6. Referenced catalog numbers may not include voltage, mounting style, modifications, and other special features that are specified. The Contractor, supplier, and manufacturer shall provide the specified requirements.
7. The Contractor may propose an alternate luminaire for approval; however, sufficient information shall be provided as a part of the submittal for the Engineer and the Owner to review and compare the listed luminaire and the proposed alternate.
   a. The Contractor and lighting supplier shall provide a photometric, energy usage (efficiency), approvals/listings and materials comparison between the two fixtures.
   b. If an alternate lighting fixture layout is required, the Contractor and lighting fixture supplier shall provide all illuminance calculations as part of the submittal to verify minimum illuminance levels are met by the proposed revisions.
   c. Proposed alternates shall be shown to be equivalent or superior to the fixture listed. It shall be the Contractor’s responsibility to provide sufficient information to the Engineer and the Owner to verify and approve alternates.
8. Provide lighting calculations showing average/min/max foot candle levels and power density for each space.

PART 2 PRODUCTS

2.01 GENERAL

A. Lighting materials, including fixtures, accessories, and hardware, shall conform to the requirements specified on the Lighting Fixture Schedule on the project drawings.

B. Lighting fixtures shall be provided where shown on the drawings. The drawing's light fixture placement is diagrammatical. The fixture layout shall be coordinated with the various trades to provide access to the fixture and to avoid installed equipment interference.

2.02 LIGHTING CONTROLS

A. Per Section 26 09 16 – ELECTRICAL CONTROLS AND RELAYS - that includes control switches, selector switches, relays, lighting contactors and other devices.

B. The project drawings indicate the operation and control methods and the circuits for the lighting systems.

2.03 LED LIGHTING

A. LED lighting shall be a functioning unit with all components including light source, lamps, power supply, control interface and components required for operation and shall be assembled by the lighting manufacturer or supplier.

B. Lighting fixtures shall be UL or ETL listed and labeled. Lighting testing shall be per IESNA LM-79 AND LM-80 procedures.

C. Lighting fixtures shall comply with ANSI chromaticity standard for classifications of color temperature. Refer to the specified LED lamp color and color temperature or the manufacturer's literature.

D. LED drivers shall have reversed polarity protection, open circuit protection and require no minimum load. Drivers shall operate at a minimum 80 percent efficiency and have a class A noise rating.

E. Where LED systems are specified to be dimmable, the LED system shall be capable of full and continuous dimming.

2.04 EXTERIOR LIGHTING POLES

A. Provide lighting poles with pole cap, hand holes, ground lug, and the necessary fixture mounting hardware.

B. TYPE:
   1. Site/Area poles as shown on the contract drawings:
      a. Shape: round, square, tapered, straight
      b. Material: Steel, concrete, aluminum, wood
      c. Finish: galvanized, powder coated

d. Height: 6’, 10’, 15’, 20’, 30’ examples
e. Options: tall pole breakaway, selector switch such as HOA where Auto mode may be a photocell, and GFI receptacle may also be required on a pole where shown.

2. Stanchion poles:
   a. In Class I, Div. 1 areas provide pole as detailed and specified on the drawings.
   b. In Class I, Div. 2 and unclassified areas provide a telescoping light pole. Pole shall meet the sub-sequent requirements.
   c. Construction:
      1) Telescoping; factory sealed and pre-wired
      2) Adjustable 360 deg. pole rotation
      3) Adjustable height
      4) Spring assist for controlled lowering and assist to raise
   d. Height: As shown; adjustable raised height
   e. Certifications:
      1) UL 1598
      2) CSA C22.2 No. 250.0-08
      3) Suitable for use in Class I, Division 2 and Class I, Zone 2 areas
   f. Wind Rating: AASHTO standard; 310 mph aluminum; 230 mph stainless steel
   g. Vibration: IEC 60068-2-6
   h. Material: Aluminum T6061 or Stainless Steel 316 grade, as specified
   i. Hardware: Xylan 1400 coated for corrosion protection
   j. Cable:
      1) 12/3 AWG UL/CSA Listed
      2) 600V, -40 deg C to 105 deg C
      3) Sun and oil resistant
      4) ROHS II Reach
      5) Internal conduit for cable protection
   k. System shall be factory assembled and wired
   l. Coordinate with fixture mounting requirements
   m. Poles shall not to be handrail mounted
   n. Pole shall be Eaton/Crouse Hinds V-Spring system or approved equal.
   o. Model V65BA –A; top hat and fitting mounts shall be provided as required for fixtures.
   p. Provide optional “J” bolts as required for wind requirements in the area.

2.05 SITE JUNCTION BOXES

A. Provide a minimum of one junction box for the distribution of outdoor lighting circuits within ten feet of building and as required. Boxes shall be precast concrete, set flush with the ground. Size shall be approximately 10 x 16 x 12 inches deep.

B. Lid shall be cast iron with permanent inscription: "LIGHTING". Boxes shall be Brooks Products, Oldcastle Precast, Forni Corporation, Utility Vault Company, Christy Concrete Products, or approved equal.

C. Examples: Jensen Precast Pull Boxes 10” x 17”, Oldcastle, Brooks Products, Christy, J&R, Caltrans. HT = High Traffic Pull Box or approved equal.

D. Circuit’s raceways and conductors shall be terminated and spliced, respectively at new junction box. Provide watertight U.L. Listed splices for the circuits.

2.06 PHOTOELECTRIC CELL UNITS

A. Photoelectric cell units shall in a plug receptacle assembly.

B. The plug receptacle assembly shall be three-prong polarized locking type.

C. Assembly shall be suitable for outdoor mounting.

PART 3 EXECUTION

3.01 GENERAL

A. The location and type of light fixtures and control are shown on the drawings.

B. Lighting circuit raceways and conductors shall be provided and sized by the contractor, where the circuits are not shown on the drawings.

C. Raceways and wire shall be provided from the fixtures and switches to the lighting panel in accordance with the NEC.

D. Raceways shall be provided in accordance with Section 26 05 33 – RACEWAYS AND BOXES FOR ELECTRICAL SYSTEMS.

E. Circuit wire shall be provided in accordance with Section 26 05 19 – LOW VOLTAGE POWER CONDUCTORS.

F. Fixtures labeled to require conductors with a temperature rating exceeding 75 degrees C shall be spliced to circuit conductors in a separately mounted junction box. Fixture shall be connected to junction box using flexible conduit with a temperature rating equal to that of the fixture.

G. Labels and marks, except the UL label, shall be removed from exposed parts of the fixtures. Fixtures shall be cleaned when the project is ready for acceptance.

H. Where recessed fixtures are required, the fixture shall be provided with mounting hardware for the ceiling system specified.

I. A concealed latch and hinge mechanism shall be provided for access to the lamps and ballasts and for removal and replacement of the diffuser without removing the fixture from ceiling panels.

J. Fixtures recessed in concrete shall have protective coating of bituminous paint.
   1. Fixtures shall be aligned and directed to illuminate an area as specified.
   2. Fixtures shall be directly and rigidly mounted on their supporting structures.
   3. Conduit system shall not be used to support fixtures.
   4. Where brackets or supports for lighting fixtures are welded to steel members, the welded area shall be treated with rust-resistant primer and finish paint.

K. Tighten electrical connectors and terminals according to manufacturer's published torque-tightening values or use torque values specified in UL 486A and UL 486B.

L. Verify normal operation of each fixture.

M. Interrupt the power supply to demonstrate emergency lighting operation to battery power source or alternate power source. Retransfer to normal power supply.

N. Replace damaged fixtures.

END OF SECTION

SECTION 31 10 00
SITE CLEARING

PART 1 GENERAL

1.01 DESCRIPTION

A. Scope: This section specifies site preparation which consists of clearing, grubbing and demolition.

B. Existing Conditions: The Contractor shall determine the actual condition of the site as it affects this portion of work.

C. Protection: Site preparation shall not damage structures, landscaping or vegetation adjacent to the site. The Contractor shall repair, or replace any damaged property.

PART 2 PRODUCTS (NOT USED)

PART 3 EXECUTION

3.01 CLEARING AND GRUBBING

A. Unless otherwise specified, the Contractor shall remove obstructions such as brush, trees, logs, stumps, roots, heavy sod, vegetation, rock, stones larger than 6 inches in any dimension, broken or old concrete and pavement, debris, and structures where the completion of the work require their removal.

B. Material that is removed and is not to be incorporated in the work shall be disposed of off the site by the Contractor. Designated disposal area to be determined by the City.

3.02 DEMOLITION AND REMOVAL

A. Structures: Demolition and removal of structures consist of removal of abandoned superstructures, foundation walls, footings, slabs and any other structures. Excavations caused by existing foundations shall be cleared of waste, debris and loose soil, and refilled as specified.

B. Pavement: When portions of asphalt pavements and concrete pads are to be removed and later construction is to be connected, edges shall be saw cut, on a neat line at right angles to the curb face.

C. Salvage: The City has the right to salvage any items scheduled for removal. The Contractor shall notify the City 5 days prior to any salvage or demolition work to determine the disposition of items to be removed. The City will mark items to be salvaged. Such items shall be properly disconnected, removed from their foundations, cleaned, and stored at a location on the plant site as specified.

3.03 UTILITY INTERFERENCE

A. Where existing utilities interfere with the execution of the work, the Contractor shall discuss relocation or realignment with City and proceed in accordance with City's direction in accordance with the General Conditions of the Contract Documents.

END OF SECTION

SECTION 31 23 00
EXCAVATION AND FILL

PART 1 GENERAL

1.01 DESCRIPTION

A. Scope: This section specifies earthwork which consists of subgrade preparation, excavation, filling, grading, and disposal of excess material.

B. Definitions:

1. Optimum Moisture Content:

   a. Determined in accordance with ASTM Standard specified to determine the maximum dry density for relative compaction.

   b. Determine field moisture content on basis of faction passing No. 200 sieve.

   c. Prepared Ground Surface: Ground surface after completion of clearing and grubbing, scalping of sod, stripping of topsoil, excavation to grade, and scarification and compaction of subgrade.

   d. Relative Compaction:

      1) Ratio, in percent, of as-compacted field dry density to laboratory maximum dry density as determined in accordance with ASTM D1577.
      2) Apply corrections for oversize material to either as-compacted field dry density or maximum dry density, as determined by the Inspector.
      3) Relative Density: Calculated in accordance with ASTM D4254 based on maximum index density determined in accordance with ASTM D4253 and minimum index density determined in accordance with ASTM D4254.
      4) Subgrade: Layer of existing soil after completion of clearing, grubbing, scalping of topsoil or excavating prior to placement of fill, backfill, roadway structure or base for floor slab.
      5) Unsuitable Material: Soil containing debris, organics, trees and root systems, oversized rock, and low density, loose granular and soft fine-grained silt and clay soil.
      6) Compaction: The degree of compaction is specified as percent compaction. Maximum or relative densities refer to dry soil densities obtainable at optimum moisture content.
      7) Excavation Slope: Excavation slope shall be defined as an inclined surface formed by removing material from below existing grade. The geotechnical report recommends cut and fill slopes. 2:1 (horiz:vert) permanent cut and fill slopes; temporary cut into existing filled ground no steeper than 1:1; and temporary back cut in old deposits may be constructed a ¾:1.

8) Per the geotech report, CASSF Areas 5 and 6 are to be uniformly compacted to a relative compaction of 95%.

1.02 QUALITY ASSURANCE

A. References:

1. This section contains references to the following documents. They are a part of this section as specified and modified. Where a referenced document contains references to other standards, those documents are included as references under this section as if referenced directly. In the event of conflict between the requirements of this section and those of the listed documents, the requirements of this section shall prevail.
2. Unless otherwise specified, references to documents shall mean the documents in effect at the time of Advertisement for Bids or Invitation to Bid (or on the effective date of the Agreement if there were no Bids). If referenced documents have been discontinued by the issuing organization, references to those documents shall mean the replacement documents issued or otherwise identified by that organization or, if there are no replacement documents, the last version of the document before it was discontinued. Where document dates are given in the following listing, references to those documents shall mean the specific document version associated with that date, whether or not the document has been superseded by a version with a later date, discontinued or replaced.

Reference	Title
ASTM C33	Standard Specification for Concrete Aggregates
ASTM C136	Standard Method for Sieve Analysis of Fine and Coarse Aggregates
ASTM D448	Standard Classification for Sizes of Aggregate for Road and Bridge Construction
ASTM D1556	Standard Test Method for Density and Unit Weight of Soil in Place by Sand-Cone Method
ASTM D1557	Test Methods for Moisture-Density Relations of Soils and Soil-Aggregate Mixtures Using 10-lb (4.5-kg) Rammer and 18-in. (457-mm) Drop
ASTM D1709	Standard Test Methods for Impact Resistance of Plastic Film by the Free-Falling Dart Method
ASTM D3017	Test Method for Moisture Content of Soil and Soil-Aggregate in Place by Nuclear Methods (Shallow Depth)
ASTM D4253	Standard Test Methods for Maximum Index Density and Unit Weight of Soils Using a Vibratory Table
ASTM D4254	Standard Test Methods for Minimum Index Density and Unit Weight of Soils and Calculation of Relative Density
ASTM D6938	Standard Test Methods for In-Place Density and Water Content of Soil and Soil-Aggregate by Nuclear Methods (Shallow Depth)
ASTM E1643	Standard Practice for Selection, Design, Installation, and Inspection of Water Vapor Retarders Used in Contact with Earth or Granular Fill Under Concrete Slabs

Reference	Title
ASTM E1745	Standard Specification for Plastic Water Vapor Retarders Used in Contact with Soil or Granular Fill under Concrete Slabs
ASTM E96	Standard Test Methods for Water Vapor Transmission of Materials
SSPWC	Standard Specification for Public Works Construction (Greenbook)
Whitebook	San Diego Supplement to the Standard Specifications for Public Works Construction (Whitebook)

B. Tests:
   1. The Inspector will take samples and perform moisture content, gradation, compaction, and density tests during placement of backfill materials to check compliance with these specifications. Refer to Section 01 45 33. The Contractor shall remove surface material at locations designated by the Inspector and provide such assistance as necessary for sampling and testing. The Inspector may direct the Contractor to construct inspection trenches in compacted or consolidated backfill to determine that the Contractor has complied with these specifications.
   2. Tests will be made by the Inspector in accordance with the following:

Test	Standard Procedure
Moisture content	ASTM D3017
Gradation	ASTM C136
Density in-place	ASTM D1556
Moisture-density relationships	ASTM D1557

1.03 SUBMITTALS

A. Samples of fill materials to be used shall be submitted 2 weeks in advance of use. Samples shall consist of 0.5 cubic feet of each type of material.

B. Excavation Plan Detailing:
   1. Methods and sequencing of excavation.
   2. Proposed locations of stockpiled excavated material.
   3. Proposed on-site and offsite spoil disposal sites.
   4. Number, types, and sizes of equipment proposed to perform excavations.
   5. Anticipated difficulties and proposed resolutions.

C. Required excavation permits from applicable governing agencies.

PART 2 PRODUCTS

2.01 FILL MATERIALS

A. Use of Onsite Materials: The near-surface onsite materials consist of sandy soils. The materials generated from the site over excavation can be utilized as compacted fill as long as those materials satisfy criteria for general fill.

B. General Fill: General fill should consist of granular soil materials (SC, SP, SW, SP-SM, SM, and CL) free of organics, oversize rock (greater than three inches in diameter), trash, debris, and other deleterious or unsuitable materials, and should have an expansion index less than 50.

C. Aggregate and Miscellaneous Base: Base materials should consist of materials conforming to Section 200-2.5 of the Standard Specifications for Public Works Construction (SSPWC) latest publication.

D. Imported Fill: Although imported fill is not anticipated, if material is imported, the imported subgrade fill materials shall comply with recommendations for general fill or as appropriate for its intended use. Imported fill shall be reviewed by the Inspector prior to being transported to the site.

PART 3 EXECUTION

3.01 GENERAL

A. Subgrade Preparation
   1. General:
      a. Keep subgrade free of water, debris, and foreign matter during compaction or proof-rolling.
         1) Bring subgrade to proper grade and cross-section and uniformly compact surface.
         2) Do not use section of prepared ground surface as haul roads. Protect prepared subgrade from traffic.
         3) Maintain prepared ground surface in finished condition until next course is placed.
   2. Compaction:
      a. Fill placement and grading operations shall be performed according to SSPWC Section 300-4 and Whitebook 300-4.4.
      b. Under Earthfill: Following over excavation, scarify and compact upper 6 inches to a 90 percent relative compaction as determined in accordance with ASTM D1557. The resulting surface shall be proof-rolled to confirm that the subgrade compaction provides a firm and unyielding surface for the overlying compacted fill. The subgrade may need to be dried back to near the optimum moisture content of the soil to achieve 90 percent relative compaction and provide a firm and unyielding surface.
      c. Under Pavement Structure, Floor Slabs on Grade, or Granular Fill Under Structure: Compact the upper 12 inches to 95 percent relative compaction as determined in accordance with ASTM D1557.
         a) Moisture Conditioning:
   3. Dry Subgrade: add water, then mix to make moisture content uniform throughout.
   4. Wet Subgrade: Aerate material by blading, disking, harrowing, or other methods, to hasten drying process.
         a) Testing:

5. Proof-roll subgrade (except in pipe trenches) to detect soft or loose subgrade or unsuitable material, as determined by Inspector.
6. Detect soft or loose pipe trench subgrade by observation. Undisturbed pipe trench subgrade (bottom of trench) shall not be compacted.
7. In-place density tests in accordance with ASTM D6938. A minimum of one density test for every 50 foot by 50 foot subgrade area is required.
    a) Correction:
8. Soft or loose subgrade:
9. Adjust moisture content and recompact.
10. Over excavate and replace with suitable material from the excavation as specified herein.
11. Unsuitable Material: Contractor shall excavate and remove unsuitable materials prior to commencing grading operations. Over excavate and replace with suitable material from the excavation as specified herein.

B. Over excavation and Recompaction:
1. Overexcavation and recompaction of building and pavement areas required to mitigate dry seismic settlement potential and low density soil in the upper fine grained layer at the site.
2. Mat Foundation:
    a. For shallow mat foundations, where the bottom is at approximately 1 foot below the adjacent finished grade, Contractor shall over excavate, moisture-condition, and recompact a minimum of 3 feet of soil or 4 feet below the existing grade, whichever provides the deeper fill.
    b. For deep mat foundations, where the bottom is at approximately 15 feet below the adjacent finish grade, Contractor shall over excavate, moisture-conditioned, and recompact a minimum of 1 feet of soil.
    c. Over excavation and recompaction shall extend at least 5 feet beyond the proposed building limits.
3. Concrete Flatwork, Hardscape, and Paved Areas:
    a. Areas below concrete flatwork, hardscapes, or to be paved shall be over excavated and recompacted to 12 inches below existing grade.

C. Excavation:
1. Comply with applicable excavation permits.
2. Prior to excavating, install erosion and sediment control measures as specified with required permits.
3. Excavate to lines, grades, and dimensions shown and as necessary to accomplish Work. Excavate to within tolerance of plus or minus 0.1 foot, except where dimensions or grades are shown or specified as maximum or minimum. Allow for forms, working space, granular base, topsoil, and similar items, wherever applicable. Trim to neat lines where concrete is to be deposited against earth. Furnish, place, and maintain supports and shoring that may be required for the sides of the excavations.

4. Removal and Exclusion of Water: Remove and exclude water, if encountered, from open excavations, including stormwater, groundwater, irrigation water, and wastewater. Use dewatering wells, well points, sump pumps, or other means to remove water and continuously maintain groundwater at a level at least 2 feet below the lowest point of excavations before the excavation work begins at each location. Remove and exclude water until backfilling is complete and field soils testing has been completed, or as approved by Inspector. Excavate and replace any subgrade soil that is loosened or damaged by water as directed by Inspector.
5. Trench Width:
   a. Minimum Width of Trenches:
      1) For sewers, potable water mains, and storm drains, refer to Drawing No. C1-501.
   b. For other single pipe, conduit, direct-buried cable, and ductbank:
6. Less than 4-inch OD or width: 12 inches
7. Greater than 4-inch OD or width: 18 inches greater than OD or width of pipe, conduit, direct-buried cable, or duct bank.
8. Multiple pipes, conduits, cables or duct banks in single trench: 18-inch greater than aggregate width of pipes, conduits, cables, duct banks, plus place between.
9. Increase trench widths by thicknesses of shoring.
10. Maximum Trench Width: Unlimited, unless otherwise shown or specified, or unless excess width will cause damage to existing facilities, adjacent property, or completed Work.
11. Pipe and Utility Trench Excavation:
12. Perform in accordance with CAL-OSHA, latest edition.
13. General: Unless otherwise indicated, open-cut trenches with widths as indicated for excavation of pipelines and utilities.
14. Open Trench Length: As needed.
15. Trench Bottom: Uniformly excavate and smooth the bottom of the trench to the grade of the bottom of the pipe bedding. Remove loose or disturbed material from the bottom of the trench, including excavator ridges.
16. Over excavation: Over excavate where required by Inspector. Backfill excavation below the grade ordered with the indicated material and compaction specified.
17. Trench Over excavation: Where trenches are indicated to be over excavated, excavate to the depth indicated, and install backfill to the grade of the bottom of the pipe bedding.

D. Dewatering:
   1. Groundwater is not anticipated during site grading activities. Dewatering is not anticipated; groundwater seepage could occur in response to seasonal rainfall or nearby irrigation.

E. Surplus Material:
   1. Unless otherwise specified, surplus excavated material shall be disposed of offsite in accordance with Inspector and applicable ordinances and environmental

requirements.

F. Hauling:
   1. When hauling is done over highways or city streets, the loads shall be trimmed and the vehicle shelf areas shall be cleaned after each loading. The loads shall be watered after trimming to eliminate dust.

G. Finish Grading:
   1. Finished surfaces shall be smooth, compacted and free from irregularities. The degree of finish shall be that normally obtainable with a blade-grader.
   2. Finished grade shall be as specified by the contours plus or minus 0.10 foot except where a local change in elevation is required to match sidewalks, curbs, manholes and catch basins, or to ensure proper drainage. Allowance for topsoil and grass cover, and subbase and pavement thickness shall be made so that the specified thickness of topsoil can be applied to attain the finished grade.
   3. When the work is an intermediate stage of completion, the lines and grades shall be as specified plus or minus 0.5 foot to provide adequate drainage.
   4. If the soil is to be cultivated or straw is to be incorporated into the surface, rocks larger than 2-1/2 inches in maximum dimension, roots and other debris on the surface of the slope shall be removed and disposed of prior to cultivation or placement of straw.

H. Control of Erosion:
   1. The Contractor shall maintain earthwork surfaces true and smooth and protected from erosion. Where erosion occurs, the Contractor shall provide fill or shall excavate as necessary to return earthwork surfaces to the grade and finish specified.

3.02 EARTHWORK FOR STRUCTURES

I. Foundation Preparation Beneath Structure: Clear, grub, and strip areas beneath structure in accordance with Paragraph 3.01.B above and per section 5.7 Retaining Wall Design Parameters of the Geotechnical Report.

J. Refer to Section 03 30 50 Cast-in-Drilled Hole (CIDH) Piles

3.03 EARTHWORK FOR PIPELINES AND CONDUITS

A. Pipeline Excavation: The bottom of the trench shall be carried to the specified lines and grades with proper allowance for pipe thickness and for bedding as specified.

B. Pipeline Backfill:
   1. Bedding: The Contractor shall not proceed with backfill placement in excavated areas until the bedding has been inspected by the Inspector. All pipe shall have a minimum thickness of bedding material below the barrel of the pipe as specified. Bedding material shall be placed in the bottom of the trench, leveled and

compacted. Bell holes shall be excavated at each pipe joint to permit proper inspection and uniform bearing of pipe on bedding material.

2. After the pipe has been laid to alignment and grade, unless otherwise specified, additional bedding material shall be placed in layers the full width of the trench and compacted up to the specified level. Bedding shall be placed simultaneously on both sides of the pipe, keeping the level of backfill the same on each side. The material shall be carefully placed and compacted around the pipe to ensure that the pipe barrel is completely supported and that no voids or uncompacted areas are left beneath the pipe. Contractor shall use particular care in placing material on the underside of the pipe to prevent lateral movement during backfilling.
3. Initial Backfill: After pipe has been properly bedded, Contractor shall place and compact initial backfill as specified. Initial backfill, where specified below the springline of the pipe, shall be placed and compacted in accordance with SSPWC Section 217-2.
4. Subsequent Backfill:
5. General: Backfill material, placement and compaction above the pipe zone shall be as specified. Backfill above the pipe zone shall not commence until pipe zone backfill has been inspected and accepted by the Inspector.
6. Trench Zone: Unless otherwise specified, select granular backfill shall be in accordance with SSPWC and Whitebook Sections 217-2.2. The trench shall be backfilled to an elevation which will permit the placement of the specified surface or paving. Asphalt paving shall be per City Standard Drawing SDG-113 (Street Classification: Cul De Sac), and Greenbook Sections 203-1 and 203-6. Other surfaces shall be restored, including compaction, to the condition existing prior to construction including restoration of yard areas.
7. Street or Surface Zone: Backfill shall be used for all trenches in accordance with SSPWC and Whitebook Section 217-2.2.

3.04 SUBGRADE FOR PAVEMENT

A. Subgrades shall meet requirements of Greenbook Section 306, Whitebook Section 301, and City Standard Drawings, SDC-103.

END OF SECTION

SECTION 32 17 23
PAVEMENT MARKINGS

PART 1 **GENERAL**

1.01 RELATED DOCUMENTS

A. Drawings and general provisions of the Contract, including General Conditions and Division 01 Specification Sections, apply to this Section.

1.02 SUMMARY

A. Section Includes:
   1. Traffic lines and markings.
   2. Legends.
   3. Paint.
   4. Glass beads.

B. Related Requirements: Asphalt paving per City Standard Drawing SDG-113 (Street Classification: Cul De Sac), Greenbook Section 203-6, and other related sections of Greenbook and Whitebook.

1.03 REFERENCE STANDARDS

A. This section contains references to the following documents. They are a part of this section as specified and modified. Where a referenced document contains references to other standards, those documents are included as references under this section as if referenced directly. In the event of conflict between the requirements of this section and those of the listed documents, the requirements of this section shall prevail.

B. Unless otherwise specified, references to documents shall mean the documents in effect at the time of Advertisement for Bids or Invitation to Bid (or on the effective date of the Agreement if there were no Bids). If referenced documents have been discontinued by the issuing organization, references to those documents shall mean the replacement documents issued or otherwise identified by that organization or, if there are no replacement documents, the last version of the document before it was discontinued. Where document dates are given in the following listing, references to those documents shall mean the specific document version associated with that date, regardless of whether the document has been superseded by a version with a later date, discontinued or replaced.

Reference	Title
AASHTO M247	Standard Specification for Glass Beads Used in Traffic Paint
ASTM D34	Standard Guide for Chemical Analysis of White Pigments
ASTM D126	Standard Test Methods for Analysis of Yellow, Orange, and Green Pigments Containing Lead Chromate and Chromium Oxide Green
ASTM D562	Standard Test Method for Consistency of Paints Measuring Krebs Unit (KU) Viscosity Using a Stormer-Type Viscometer

Reference	Title
ASTM D711	Standard Test Method for No-Pick-Up Time of Traffic Paint
ASTM D713	Standard Practice for Conducting Road Service Tests on Fluid Traffic Marking Materials
ASTM D969	Standard Test Method for Laboratory Determination of Degree of Bleeding of Traffic Paint
ASTM D1301	Standard Test Methods for Chemical Analysis of White Lead Pigments
ASTM D1394	Standard Test Methods for Chemical Analysis of White Titanium Pigments
ASTM D1475	Standard Test Method for Density of Liquid Coatings, Inks, and Related Products
ASTM D1640	Standard Test Methods for Drying, Curing, or Film Formation of Organic Coatings at Room Temperature
ASTM D2202	Standard Test Method for Slump of Sealants
ASTM D2371	Standard Test Method for Pigment Content of Solvent-Reducible Paints
ASTM D2621	Standard Test Method for Infrared Identification of Vehicle Solids from Solvent-Reducible Paints
ASTM D2743	Standard Practices for Uniformity of Traffic Paint Vehicle Solids by Spectroscopy and Gas Chromatography
SSPWC	Standard Specifications for Public Works Construction
WHITEBOOK (WB)	San Diego Supplement to the Standard Specifications of Public Works Construction (Whitebook)

1.04 SUBMITTALS

A. See Section 01 33 00.

B. Product Data: Submit paint formulation for each type of paint.

C. Samples:
   1. Submit eight sample plates of each color of material. Prepare four plates without glass beads and four with glass beads for each different batch of material. After approval, City will retain these plates for field comparisons of applied paint.
   2. Submit two gallons and four one quart paint samples accompanied by properly executed test reports.
   3. Submit samples of glass bead in compliance with AASHTO M247.

D. Manufacturer's Certificate: Certify Products meet or exceed specified requirements.

E. Test and Evaluation Reports: Submit source and acceptance test results in accordance with AASHTO M247.

F. Manufacturer's Instructions: Submit instructions for application temperatures, eradication requirements, application rate, line thickness, type of glass beads, bead embedment and bead application rate, and any other data on proper installation.

1.05 QUALITY ASSURANCE

A. Perform Work in accordance with SSPWC (Greenbook) and Whitebook standards.

B. Maintain one copy of each document on site.

1.06 QUALIFICATIONS

A. Manufacturer: Company specializing in manufacturing Products specified in this section.

B. Applicator: Company specializing in performing work and approved by manufacturer.

1.07 DELIVERY, STORAGE, AND HANDLING

A. Section 01 61 00: Requirements for storing and protecting products.

B. Invert containers several days prior to use when paint has been stored more than 2 months. Minimize exposure to air when transferring paint. Seal drums and tanks when not in use.

C. Glass Beads. Store glass beads in cool, dry place. Protect from contamination by foreign substances.

1.08 AMBIENT CONDITIONS

A. Section 01 61 00: Ambient conditions control facilities for product storage and installation.

B. Do not apply materials when surface and ambient temperatures are outside temperature ranges required by paint product manufacturer.

C. Do not apply exterior coatings during rain or snow when relative humidity is outside humidity ranges, or moisture content of surfaces exceed those required by paint product manufacturer.

D. Do not apply paint when temperatures are expected to fall below 50 degrees for 24 hours after application.

E. Volatile Organic Content (VOC). Do not exceed State or Environmental Protection Agency maximum VOC on traffic paint.

1.09 WARRANTY

A. See General Requirements. Requirements for warranties.

PART 2 PRODUCTS

2.01 PAINTED PAVEMENT MARKINGS

A. Manufacturer List:

1. EZ Liner Industries
2. Franklin Paint Company
3. Pathmark Traffic Products
4. Pervo Pain Company
5. Safety Coatings Inc.
6. Or approved equal

B. Furnish materials in accordance with SSPW and WB standards.

C. Performance / Design Criteria:
1. Paint Adhesion: Adhere to road surface forming smooth continuous film one minute after application.
2. Paint Drying: Tack free by touch so as not to require coning or other traffic control devices to prevent transfer by vehicle tires within two minutes after application.
3. Paint: Ready mixed, conventional and fast dry waterborne traffic paints, lead-free, non-toxic, ASSHTO Test Deck, minimum retroreflectance of 100 mcds, durability rating of 6 or more after in place for 9 months; within following limits:
4. Pigment, percent by weight: 60 plus or minus 2.
5. Vehicle, percent by weight: 40 plus or minus 2.
6. Non-Volatile, percent by weight of paint: 76.0.
7. Weight per gallon, pounds minimum 13.0.
8. Viscosity: 80-95 Krebs Units at 77 degrees F.
9. Grind (Hegeman Gauge), minimum Field Tested no tracking time under ambient conditions: 20-90 seconds.
10. Dry Through Time, 15 mils wet at 90 percent relative humidity, 72 degrees F, ASTM D1640: 125 minutes maximum.
11. VOC (volatile Organic Content): One lbs/gal maximum.
12. Glass Beads: AASHTO M247, Type 1, coated to enhance embedment and adherence with paint.

2.02 EQUIPMENT

A. Continuous Longitudinal Line Application Machine: Use application equipment with following capabilities.
1. Dual nozzle paint gun to simultaneously apply parallel lines of indicated width in solid or broken patterns or various combinations of those patterns.
2. Pressurized bead-gun to automatically dispense glass beads onto painted surface, at required application rate.
3. Measuring device to automatically and continuously measure length of each line placed, to nearest foot.
4. Device to heat paint to 110 degrees for fast dry applications.

B. Machine Calibration:

1. Paint Line Measuring Device: Calibrate automatic line length gauges to maintain tolerance of plus or minus 25 feet per mile.
2. Cycle Length/Paint Line Length Timer: Calibrate cycle length to maintain tolerance of plus or minus 6 inches per 40 feet; calibrate paint line length to maintain tolerance to plus or 3 inches per 10 feet.
3. Paint Guns: Calibrate to simultaneously apply paint binder at uniform rates as specified with an allowable tolerance of plus or minus 1 mil.
4. Bead Guns: Calibrate to dispense glass beads simultaneously at specified rate. Check guns by dispensing glass beads into gallon container for predetermined fixed period of time. Verify weight of glass beads.

5. Other Equipment: For application of crosswalks, intersections, stop lines, legends and other miscellaneous items by walk behind stripers, hand spray or stencil trucks, apply with equipment meeting requirements of this section. Do not use hand brushes or rollers. Optionally apply glass beads by hand.

2.03 SOURCE QUALITY CONTROL

A. See Section 01 45 16.13.

1. Test and analyze traffic paints in accordance with ASTM D34, ASTM D126, ASTM D562, ASTM D711, ASTM D713, ASTM D969, ASTM D1301, ASTM D1394, ASTM D1475, ASTM D2202, ASTM D2371, ASTM D2621, and ASTM D2743.

2. Make paints and glass beads available for inspection at manufacturer's factory prior to packaging for shipment. Notify City at least seven days before inspection is allowed.

PART 3 EXECUTION

3.01 EXAMINATION

A. Section 01 45 16.13.

1. Do not apply paint to concrete surfaces until concrete has cured for 28 days.

3.02 PREPARATION

A. Maintenance and Protection of Traffic:
1. Coordinate with the City and provide short term traffic control for regular Plant Operations.
2. Prevent interference with marking operations and to prevent traffic on newly applied markings before markings dry.
3. Maintain travel lanes between 7:00 AM to 9:00 AM, and between 4:00 PM and 6:00 PM.
4. Maintain access to existing businesses and other properties requiring access.

B. Surface Preparation.

1. Clean and dry paved surface prior to painting.
2. Blow or sweep surface free of dirt, debris, oil, grease or gasoline.
3. Spot location of final pavement markings as specified and as indicated on Drawings by applying pavement spots 25 feet on center.
4. Notify City and Engineer after placing pavement spots and minimum 3 days prior to applying traffic lines.

3.03 DEMOLITION

A. Remove existing markings in an acceptable manner. Do not remove existing pavement markings by painting over with blank paint. Remove by methods that will cause least damage to pavement structure or pavement surface. Satisfactorily repair any pavement or surface damage caused by removal methods.

B. Clean and repair existing or reinstalled lines and legends.

3.04 APPLICATION

A. Agitate paint for 1-15 minutes prior to application to ensure even distribution of paint pigment.

B. Dispense paint at ambient to wet-film thickness of 15 mils, except dispense edge markings to wet-film thickness of 12 mils.

C. Apply glass beads at rate of 6 pounds per gallon of paint.

D. Apply markings to indicated dimensions at indicated locations.

E. Prevent splattering and over spray when applying markings.

F. Unless material is track free at end of paint application convoy, use traffic cones to protect markings from traffic until track free. When vehicle crosses a marking, and tracks it or when splattering or over spray occurs, eradicate affected marking and resultant tracking and apply new markings.

G. Collect and legally dispose of residues from painting operations.

3.05 TOLERANCES

A. See Section 01 45 16.13.
   1. Maximum Variation from Wet Film Thickness: 1 mil.
   2. Maximum Variation from Wet Paint Line Width: Plus, or minus 1/8 inch.
   3. Maintain cycle length for skip lines at tolerance of plus or minus 6 inches per 40 feet and line length of plus or minus 3 inches per 10 feet.
   4. Maximum Variation from Specified Application Temperature: Plus, or minus 5 degrees F.

3.06 FIELD QUALITY CONTROL

A. See Section 01 45 16.13.

1. Inspect for incorrect location, insufficient thickness, line width, coverage, retention, uncured or discolored material, and insufficient bonding.

2. Repair lines and markings, which after application and curing do not meet following criteria:
   a. Incorrect Location: Remove and replace incorrectly placed patterns.
   b. Insufficient Thickness, Line Width, Paint Coverage, Glass Bead Coverage or Retention: Prepare defective material by acceptably grinding or blast cleaning to remove substantial amount of beads and to roughen marking surface. Remove loose particles and debris. Apply new markings on cleaned surface in accordance with this Section.
   c. Uncured or Discolored Material, Insufficient Bonding: Remove defective markings in accordance with this Section and clean pavement surface one foot (300 mm) beyond affected area. Apply new markings on cleaned surface in accordance with this Section.

3. Replace defective pavement markings as specified throughout 3 year warranted period. Replace markings damaged by anti-skid materials, studded tires, tire chains, chemical deicers, snow plowing or other loss of marking material regardless of cause. When markings are damaged by pavement failure or by City's painting, crack sealing, or pavement repair operations, Contractor is released from warranty requirements for damaged work.

4. A three member team will evaluate warranty provisions. Team will consist of one member from City, one member from Contractor, and third person who is mutually acceptable to City and Contractor. Any costs for third person will be equally shared between City and Contractor. At least once each year, beginning with year after acceptance, team shall:
5. Observe City taking readings by retroreflectometer, or review City records of such evaluation. The number of readings will be as large as necessary to ensure that minimum criteria are satisfied. Readings will be during period from March 15 through October, when pavement is clean and dry.
6. Determine color fade, discoloration or pigment loss based on visual color comparison between original sample plates with glass beads and in-place pavement markings.
7. Determine magnitude of material loss.

8. Prepare list of defective areas and areas requiring additional inspection and evaluation to decide where material may need replaced. Provide traffic control as necessary if markings require more detailed evaluation.

9. Replace failed or defective markings in entire section of defective markings within 30 days after notification when any of the following exists during warranty period:

10. Average retroreflectivity within any 528 foot section is less than 1225 mcd/m2/1x for white pavement markings and 100 mcd/m2/1x for yellow pavement markings.
11. Marking is discolored or exhibits pigment loss, and is determined to be unacceptable by three member team based on visual comparison with beaded color plates.
12. More than 15 percent of area of continuous line, or more than 15 percent of combined area of skip lines, within any 528 foot section of roadway is missing.

13. Replace pavement marking material under warranty using original or better type material. Continue warranty to end of original 3 year period even when replacement materials have been installed as specified.

14. Maintain daily log showing work completed, results of above inspections or tests, pavement and air temperatures, relative humidity, presence of any moisture on pavement, and any material or equipment problems. Make legible entries in log in ink, sign and submit by end of each work day. Enter environmental data into log prior to starting work each day and at two additional times during day.

3.07 PROTECTION

A. Protect painted pavement markings from vehicular and pedestrian traffic until paint is dry and track free. Follow manufacturer's recommendations or use minimum of 30 minutes. Consider barrier cones as satisfactory protection for materials requiring more than 2 minutes dry time.

3.08 MAINTENANCE

A. Furnish service and maintenance of traffic paints for three years from Date of Substantial Completion.

3.09 SCHEDULE

A. Pavement Markings:

Items	Location
4 inch White Conventional	Centerline
4 inch White Fast Dry	Centerline
24 inch White Fast Dry	Stop Line
4 inch Yellow Conventional	Crosswalk and Parking
4 inch Yellow Fast Dry	Crosswalk and Parking

END OF SECTION

SECTION 40 05 01
PIPING SYSTEMS

PART 1 GENERAL

1.01 SUMMARY

A. This section specifies the general requirements for design, selection, and supply of pipe materials, fittings, appurtenances, expansion control, supports, and seismic restraints for process, mechanical, plumbing, utility, odor control ducts, and HVAC piping systems. Installation, inspection, and testing are also specified in this Section.

B. Use the general requirements specified in this section for all piping systems.

C. Provide professional engineering services for a piping system design engineer (hereinafter and in all related and referenced sections the "Design Professional") for the design and inspection of piping systems work. For the scope of the work, defined herein as the “Design Professional’s Scope of Responsibility,” the Design Professional provides the design, final inspection, and certification for the piping supports, seismic restraints, and expansion control as specified in this Section and referenced sections.

1.02 RELATED SECTIONS

A. Section 01 33 00 –Submittal Procedures

B. Section 01 61 00 – Common Product Requirements

C. Section 01 88 15 – Anchorage and Bracing

D. Section 03 30 00 – Cast-in-Place Concrete

E. Section 31 23 00 – Excavation and Fill

F. Section 40 05 02 – Piping System Schedules

G. Section 40 05 06 – Specialty Couplings and Adapters for Process Piping

H. Section 40 05 07 – Hangers and Supports for Process Piping

I. Section 40 05 07.13 – Seismic Restraints for Piping

J. Section 40 05 07.16 – Expansion Control for Piping

K. Section 40 05 45 – Piping System Identification

L. Section 40 42 00 – Insulation for Exposed Piping and Equipment

1.03 REFERENCES

A. This section contains references to the following documents. They are a part of this section as specified and modified. Where a referenced document contains references to other standards, those documents are included as references under this section as if referenced directly. In the event of conflict between the requirements of this section and those of the listed documents, the requirements of this section prevail.

Reference	Title
ASME B16.21	Nonmetallic Flat Gaskets for Pipe Flanges
ASME B31.1	Power Piping
ASME B31.3	Process Piping
ASME B31.9	Building Services Piping
ASME Z223.1	National Fuel Gas Code
ANSI/ISA-S70.01	Quality Standard for Instrument Air
ASME B1.1	Unified Inch Screw Threads
ASME Section IX	Boiler and Pressure Vessel Code; Welding and Brazing Requirements
ASTM F37	Sealability of Gasket Materials
ASTM F104	Nonmetallic Gasket Materials
ASTM F152	Tension Testing of Nonmetallic Gasket Materials
AWWA C651	Disinfecting Water Mains
CAN/CGA B149.6	Code for Digester Gas and Landfill Gas Installations
EJMA	Expansion Joint Manufacturer's Association
UPC	Uniform Plumbing Code

1.04 DEFINITIONS

A. Terminology used in this Section conforms to the following definitions:
   1. Maximum pressure: The greatest continual pressure at which the piping system is designed to operate.
   2. Test pressure: The hydrostatic, air, or gas pressure used to determine system compliance.
   3. Take down coupling: Pipe couplings that facilitate disassembly of piping systems without damage or demolition of piping system components.
   4. Embedded/Encased piping: Piping enveloped in reinforced concrete, typically under structures and under roadways, where specified on the drawings.
   5. Exposed: All items other than buried, submerged, or encased/embedded.

B. Piping System Identification
   1. Process, mechanical, plumbing, utility, odor control, and HVAC piping system piping is identified by a two component alpha-numeric code, (Line Label) as follows:
      a. The first component of the code indicates the nominal line size.

b. The second component of the code identifies the process Service or fluid being conveyed in the Piping System.

2. Process Service identifiers for pipelines are specified on the drawings and in this Section.
3. Mark and label Piping Systems as specified in Section 40 05 45.

1.05 SUBMITTALS

A. Action Submittals:

1. Procedures: Section 01 33 00.
2. Qualifications of the Design Professional charged with inspection and certification of pipe hangers and supports and related scope of work; provide educational background, proof of registration, and proof of insurance and previous experience in performing this type of work. No further submittals under this or any related section will be considered until the Design Professional's qualifications have been reviewed and accepted by the Contractor.
3. A copy of this specification section, along with Sections 01 88 15, 40 05 07, 40 05 07.13 and 40 05 07.16, with addendum updates included, and all referenced and applicable sections, with addendum updates included, with each paragraph check-marked to indicate specification compliance or marked to indicate requested deviations from specification requirements. Check marks (□) shall denote full compliance with a paragraph as a whole. If deviations from the specifications are indicated and therefore requested by the Sub-contractor, each deviation shall be underlined and denoted by a number in the margin to the right of the identified paragraph, referenced to a detailed written explanation of the reasons for requesting the deviation. The Contractor shall be the final authority for determining acceptability of requested deviations. The remaining portions of the paragraph not underlined will signify compliance on the part of the Sub-contractor with the specifications. Failure to include a copy of the marked-up specification sections, along with justification(s) for any requested deviations to the specification requirements, with the submittal shall be sufficient cause for rejection of the entire submittal with no further consideration.
4. For each piping system, submit document listing pipe, fittings, linings, coatings, valves, flexible connectors, expansion joints, couplings, bolts, gaskets, restraints, and other items provided for each applicable pipe size and category along with layout drawings.
5. Welding: Prior to commencing any welding of steel or stainless steel pipe, supports, and/or structural attachments, provide a written description of welding techniques, including, but not limited to, materials, methods, and quality control. Identify differences in shop and field techniques. Indicate in the submittal that the welding technique has been reviewed for each piping service and certify that the technique is acceptable for the intended service condition. Written procedures to be stamped and sealed by a Professional Engineer registered in the State of California and qualified for welding design.

B. Informational Submittals:

1. Procedures: Section 01 33 00.

2. Pre-Construction Data:
   a. Design drawings and calculations for pipe supports, anchorage, seismic restraints, and expansion control systems as specified in Sections 40 05 07, 40 05 07.13, and 40 05 07.16. Drawings and calculations sealed and submitted by the Design Professional specified in this Section. The Design Professional shall affirm that loads on structures are within any stipulated load limits that may be noted on the contract documents.
   b. Submit piping layout drawings by plant area for all piping systems, including raceway, duct and other specified systems support. Indicate assembly details, location and placement of field welds, unions and flanges, fittings, valves, flushing connections, drains, sample taps, cathodic protection, seismic restraint system, expansion joints, guides, anchors, hangers, supports, and the provisions for thrust restraint, as well as any other pertinent details and appurtenances for all piping, including wall and floor penetrations, where applicable, in that area. Indicate location and clearances from structures and other utilities (ductwork, conduit, electrical tray, etc.). Include details of connections to new and existing equipment, piping and structures. Submit original layouts by the Sub-contractor; photocopies of Contract Drawings are not acceptable. Identify the invert elevation of buried pipe at changes in slope, pipe crossings, and connections to structures on piping layout drawings in addition to providing coordinates for locating changes in horizontal alignment of buried pipe.
   c. Product Samples: Where specified or when directed by the Contractor, provide mill test results or product samples.
   d. Prior to the commencement of welding, submit current and complete documentation of the welder's qualifications.
   e. Safety plans for pneumatic pressure testing.
3. Post-Construction Data: Inspection reports, authored, sealed, and signed by the Design Professional retained under the provisions of this Section submitted to the Contractor. The Design Professional's final report shall be submitted to the Contractor before beneficial occupancy by the City.

1.06 QUALITY ASSURANCE

A. Review the drawings prior to installation of piping, conduit services, and fixtures. Identify any conflicts and cooperate with the Contractor to determine the adjustments necessary to resolve conflicts.

B. Confirm the routing of each section of pipeline with other services prior to commencement of installation. Advise the Contractor of any conflicts with existing services or services yet to be installed. Where necessary, amend the routing of pipework to avoid conflict and confirm with the Contractor.

1.07 DELIVERY, STORAGE, AND HANDLING

A. Procedures: Section 01 61 00.

B. Deliver pipe, fittings, and specials to site using loading methods which do not damage pipe or linings, or coatings.

C. Piping materials delivered to site will be clearly marked to indicate size, type, class/schedule and coatings.

D. Until ready for incorporation in the work, store on site as recommended by the piping materials manufacturer to prevent damage, undue stresses, or weathering.

E. Store materials at least 8 inches above ground. Provide sufficient supports to prevent undue bending.

F. Protect non-UV light inhibited plastic from sunlight.

G. Maintain refrigerant piping factory seals until ready for incorporation into the Work.

H. Cover openings in piping, and temporarily seal to protect from contamination.

I. Protect materials and equipment from damage due to environmental conditions. Use protective cover and protect from surface water by elevating above floor or surrounding grade.

J. Protect unfinished work at end of each workday from damage, contamination and moisture by use of plugs, caps or covers.

K. Protect piping and valves from damage pending performance of system tests.

L. Use proper implements, tools, and facilities for the proper protection of the pipe. Exercise care in the installation so as to avoid damage to pipe, linings, and coatings.

M. Inspect each pipe and fitting prior to installation. Do not install damaged pipe or pipe with damaged protective coatings or linings.

N. Prevent entry of foreign matter during handling, assembling, and installation. Use compressed air, wire brush, solvent and other acceptable means to remove all foreign matter from inside of pipe prior to installation. Remove residual scale, dirt and other foreign matter from interior of piping before final connections are made.

1.08 PIPING SYSTEM DESIGN

A. Design Professional:
   1. Provide professional engineering services (“Design Professional”) for the design and inspection of piping systems work. The Design Professional shall have verifiable experience in the type of piping support, seismic restraint, and expansion control design work required for this project.
   2. The Design Profession shall be a professional engineer currently licensed to practice in the State of California.
   3. The Design Professional must obtain and maintain professional liability insurance in the amount of $1,000,000 aggregate, to be in effect for the duration of this project plus one year.
   4. The requirements for the Design Professional shall not be construed as relieving the sub-contractor of overall responsibility for this portion of the work.

B. Piping System Design and Inspection:

1. Many of the piping are meant to be field routed. The Design Professional shall provide an approximate pipe routing as part of the submittals for the review of the Engineer.
2. The Design Professional shall provide the design, inspection, and certification for piping supports (hangers, guides, anchors, structural attachments, etc.), expansion control and seismic restraints as specified in this Section and referenced Sections.
3. The work of the Design Professional is complementary to the design elements specified in the Contract Documents and intended to provide complete piping system designs. The Design Professional's inspection responsibilities also complement inspections by the City. The division of responsibility for work is shown in the following table:

Piping System Element (Specification)	Design Professional's Responsibility	Engineer's Responsibility
Pipe material and thickness, test pressures and other properties (Section 40 05 01)	(NA)	All piping
Layout drawings (Section 40 05 01)	All piping	(NA)
Support design (Section 40 05 07 and Section 01 88 15, and related sections)	All piping.	None.
Seismic bracing (Sections 40 05 07.13 and Section 01 88 15, and related sections)	All piping.	None.
Expansion and Control Design (Section 40 05 07.16 and related sections)	All piping.,	None.
Inspection – General. For design and specification conformance (Section 40 05 01 and related sections)	All piping	(NA)

4. Acceptable types of supports, guides, saddles, expansion joints, flexible couplings, hangers and structure attachments for general piping support are specified in Section 40 05 07. Seismic restraints are specified in Section 40 05 07.13. Pipe expansion control systems are specified in Section 40 05 07.16. Incorporate these specific elements into the design prepared by the Design Professional.
5. Pipe support and seismic restraint placement is subordinate to the function of anchorage, flexibility, and expansion control provisions. Do not interfere with the function of anchorage, flexibility, and expansion control provisions specified on the drawings.
6. Where pipe anchors are specified, they have been designed for longitudinal (axial) seismic loading, in addition to other longitudinal forces associated with expansion control, and pipe thrust for the associated piping. Rely on the specified anchors for longitudinal seismic bracing of the pipe in these instances.
7. There may be situations where the Contractor wants to control where certain anchors are located, the level of forces that can be transmitted to structures, the direction that

expansion growth is allowed, or requires use of particular piping elements. In such cases these elements will be specified on the drawings and incorporated into the Design Professional's design. Mandatory anchorage locations identified on the drawings and maximum limitations, if any, for structure loads from the anchor will be as indicated on the drawings, identifying location and the maximum force that can be imposed on the structure. Where structural load would be exceeded, provide piping flexibility or expansion joints to reduce the maximum loading imposed on the structure.

8. For general understanding of intent and bidding purposes, general support locations, arrangements, types and means of attachment may be shown on the drawings. Some of the elements may be specifically designed and detailed. If a particular type of support, anchor, seismic restraint or expansion element is detailed on the drawings, then incorporate those elements into the design. Include all elements of the piping system in Piping submittals by the sub-contractor, including those portions directed by the Contractor and complete piping runs.
9. Calculate the structural reaction loads for all fixed supports and indicate the calculated reaction loads on the submitted layout drawings. Notify the Contractor if any elements specified on the Drawings are incompatible with the overall piping system and its function.
10. Include consideration of and provisions for:
    a. Support and restrain pipe independent of support or restraint provided by equipment or without equipment supported loads exceeding equipment manufacturer's nozzle loading recommendations. Obtain maximum nozzle loads from the equipment manufacturer.
    b. Routing of pipe to provide access aisles free of obstruction and worker hazards. Unless otherwise specified or approved by the Contractor, the minimum clear space between equipment is 36 inches horizontally. Minimum vertical clearance is 7 ft above the floor or local grade at pedestrian access aisles and egress paths.
    c. Electrical bonding for all gas, fuel, and pneumatic conveyance systems.
    d. Dielectric separation, as specified.
11. Include all elements of piping systems required for fabrication and construction in the piping layout submittals. Depict couplings, support, restraint, anchorage, expansion control measures and other elements of the piping system.
12. Depict fitting angles and vertical and horizontal pipe locations, as determined by the Sub-contractor, on piping layout drawings.
13. Do not interfere with maintenance functions and access around equipment, including monorails and hoists.

1.09 COORDINATION

A. Refer to Section 40 05 45 for process piping identification requirements.

B. Pipe Sleeves: Coordinate placement of sleeves and penetrations in cast-in-place concrete with raceway, duct, and pipe penetrations prior to concrete placement. Coordinate placement of sleeves and wall penetration prior to construction of masonry building elements.

PART 2 PRODUCTS

2.01 PIPE MATERIALS - GENERAL

A. All pipe materials to be new, free from defects and conforming to the requirements and shall be per the table below for various applications.

Process Service Identifier	Process Service	Material	Test Pressure, psig	Pipe Marker Background Color
AOHD	Acetic Acid	PVDF / PFA	45	Orange
AMM	Liquid Ammonium Sulfate	PVC / PFA	45	Orange
AS	Antiscalant	PVC / PFA	45	Orange
BACE	BAC Filtrate	PVC	45	Green
BACF	BAC Feed	PVC	45	Green
BPE	Blended Primary Effluent	PVC		Green
CS	Caustic Soda	PVC / PFA	45	Orange
DR	Drain	PVC	45	Green
IA	Instrument Air	Stainless Steel	130	Blue
IMLR	Internal Mixed Liquor Return	PVC	45	Green
MBRAS	Membrane Bioreactor Air Scour	Stainless Steel	45	Blue
MBRE	Membrane Bioreactor Effluent	PVC	45	Blue
MBRF	Membrane Bioreactor Feed	PVC	45	Green
MBRPFC	Preformed Chloramines to MBR	PVC/PFA	45	Green
MCCRO C	CCRO Concentrate	Stainless Steel (up to Control Valve) / PVC downstream of Control Valve	450 / 45	Green
MCCROF	CCRO Feed	PVC (up to HP RO Feed Pump) / Stainless Steel (up to RO Skids)	60 / 450	Green
MCCROP	CCRO Permeate	PVC	45	Green
MCOMB P	Murray Combined RO Permeate Diversion to RO Flush Tank	PVC	45	Green
MFAS	Membrane Filtration Air Scour	Stainless Steel	45	Blue
MFE	Membrane Filtration Effluent	PVC	45	Blue
MFF	Membrane Filtration Feed	PVC	45	
MFRROC	FRRO Concentrate	Stainless Steel (up to Control Valve) / PVC downstream of Control Valve	450 / 45	Green

Process Service Identifier	Process Service	Material	Test Pressure, psig	Pipe Marker Background Color
MFRROF	FRRO Feed	PVC (up to HP RO Feed Pump) / Stainless Steel (up to RO Skids)	60 / 450	Green
MFRROP	FRRO Permeate	PVC	45	Green
ML	Mixed Liquor	PVC	45	Green
MPFC	Preformed Chloramines to Murray MF Feed	PVC/PFA	45	Green
MROC	Murray 3-Stage RO Concentrate	Stainless Steel (up to Control Valve) / PVC downstream of Control Valve	450 / 45	Green
MROF	Murray 3-Stage RO Feed	PVC (up to HP RO Feed Pump) / Stainless Steel (up to RO Skids)	60 / 450	Green
MROP	Murray 3-Stage RO Permeate	PVC	45	Green
MUVF	Murray UV/AOP Feed	PVC	45	Green
OCE	Ozone Contactor Effluent	Stainless Steel	45	Green
OCF	Ozone Contactor Feed	PVC	45	Green
ODIE	Ozone Direct Injection Effluent	Stainless Steel	45	Green
ODIF	Ozone Direct Injection Feed	Stainless Steel	45	Green
OFBE	Ozone Fine Bubble Diffuser Effluent	Stainless Steel	45	Green
OFBF	Ozone Fine Bubble Diffuser Feed	Stainless Steel	45	Green
PA	Plant Air	Stainless Steel	45	Blue
PE	Primary Effluent	PVC	90	Green
PI	Primary Influent	PVC	135	Green
PW	Potable Water (City water)	PVC	120	Green
RAS	Return Activated Sludge	PVC	45	Green
SBS	Sodium Bisulfite	PVC/PFA	45	Orange
SHC	Sodium Hypochlorite	PVC/PFA	45	Orange
SOA	Sulfuric Acid	CPVC/PFA	45	Orange
SVPFC	Preformed Chloramines to SV RO Feed	PVC/PFA	45	Green
SVROBACF	BAC Filtrate Diversion to San Vicente 3-Stage RO Feed	PVC	45	Green
SVROC	San Vicente 3-Stage RO Concentrate	Stainless Steel (up to Control Valve) /	450 / 45	Green

Process Service Identifier	Process Service	Material	Test Pressure, psig	Pipe Marker Background Color
		PVC downstream of Control Valve		
SVROF	San Vicente 3-Stage RO Feed	PVC (up to HP RO Feed Pump) / Stainless Steel (up to RO Skids)	60 / 450	Green
SVROP	San Vicente 3-Stage RO Permeate	PVC	45	Green
SVUVF	San Vicente UV/AOP Feed	PVC	45	Green
UVE	Combined UV/AOP Effluent to Drain	PVC	45	Green
UW1	Potable Water (City water)	PVC	120	Green
UW2	Spray Water	PVC	120	Green
V	Vent	PVC	45	Green
WAS	Waste Activated Sludge	PVC	45	Green

B. Piping is designated by process service rather than pipe material. Existing pipe material types may not be the same as material types specified for new piping. Investigate connections to existing piping and provide suitable connections, including electrical isolation, as necessary.

C. Fittings and Coupling Compatibility: To assure uniformity and compatibility of piping components, furnish fittings and couplings for grooved-end or shouldered-end piping systems from the same manufacturer.

D. Buried Piping: Size temporary and/or permanent thrust restraints. Design restraint systems to allow complete piping system disassembly without destruction of any portion of the piping system.

2.02 PIPING REQUIREMENTS

A. Single Wall Solvent Welded PVC Pipes and Fittings
   1. Single wall solvent welded PVC pipes shall be minimum Sch. 80 or as required for the design pressure and made of ASTM D1784-Class 12454-B, NSF 61 certified (where required), Dim. per ASTM D1785. Socket fittings shall meet requirements of ASTM D2467. Threaded PVS fittings, where used shall meet requirements of ASTM D2464.
   2. Flanges shall be used for connections to valves and equipment.
   3. Solvent Welded Cement
      a. IPS 711 Weld-on Cement or Approved Equal.
      b. Pipe and fittings greater than 12-inch diameter: IPS 719 Weld-on Cement or Approved Equal.
      c. Heavy bodied, medium setting.

d. ASTM 2564, 100 percent solvent and PVC resin. No fillers permitted.
e. Universal plastic pipe solvent is not acceptable.

4. PVC pipes shall be provided with external coating per Section 09 90 00.

B. Single Wall Solvent Welded CPVC Pipes and Fittings
1. Single wall solvent welded CPVC pipes shall be minimum Sch. 80 or as required for the design pressure and made of ASTM F441. Socket fittings shall meet requirements of ASTM F439 and threaded fittings shall meet requirements of ASTM F437.
2. Solvent Welded Cement
a. IPS 724 Weld-on Cement or Approved Equal.
b. Pipe and fittings greater than 12-inch diameter: IPS 729 Weld-on Cement or Approved Equal.
c. Heavy bodied, medium setting.
d. ASTM F493, 100 percent solvent and CPVC resin. No fillers permitted.
e. Universal plastic pipe solvent is not acceptable.
f. Formulated for use with sodium hypochlorite solution and other caustic solutions.

C. PFA Tubing and Fittings
a. Flexible virgin PFA tubing shall be suitable for flaring and available in continuous lengths of 25, 50, 100, 250, and 1,000-ft.
b. PFA tubing wall thickness shall be as follows:
1) For NS 1/4 inch, 0.047”
2) For NS 3/8 inch, 0.062”
3) For NS 1/2 inch, 0.062”
4) For NS 3/4 inch 0.062”
5) For NS 1 inch, 0.062”
c. Pressure Rating: Minimum 200 psig at 25 degrees C.
2. Fittings: PVDF Flare-type (no threads exposed to fluid) or approved equal.
3. Manufacturer
a. Tubing: Harrington Plastics (supplier) or approved equal.
b. Fittings: FlareLINK by Fit-LINE Inc. or approved equal.

D. Stainless Steel Pipe and Fittings
1. Pipe and Fittings:
a. Pipe shall be stainless steel ASTM A312, welded process, Grade TP316L, unless otherwise specified hereinafter as shown on the drawings. Seamless material may be substituted for welded material but not the reverse. Fittings shall be compatible with the pressure class and end connections for the piping.
b. Pipe shall be manufactured to nominal pipe sizes as listed in ASME B36.19 and shall have a wall thickness meeting the minimum requirements of Schedule 10S or as needed for the design pressure.

c. The minimum design of the RO feed, interstage and concentrate piping system is based on Class 150 pressure standard and subject to review for conformance to the specifications.
d. All stainless steel material shall be pickled and passivated per ASTM A380.

2. Teflon Thread Sealing Tape:
   a. Full density PTFE thread sealing tape shall be used on all threaded connections according to the following schedule. The PTFE tape used shall not be stretched during the manufacturing process.
   b. Service: Air (A) or water.
      1) Full density PTFE tape shall be used for all air piping threads and threaded process taps on the air (A) lines.
      2) The tape shall have the following characteristics:
         a) Composition: >99.0% Full density PTFE.
         b) Thickness: 0.102 mm +/- <10%.
         c) Density, apparent: 1.5 g/cm3 +/- <10%.
         d) Elongation: >100%.
         e) Tensile strength: 10-17 N/mm2.
         f) Temperature Range: -450 to 500°F.
         g) Color: Yellow.
      3) Manufacturer:
         a) Mill-Rose Red Waterline Thread Sealing Tape.
         b) Or approved equal.

E. Stainless Steel Tube and Fittings
   1. Small Diameter Stainless Steel Tubing:
      a. All stainless steel tubing shall be seamless Type 316 stainless steel, ASTM A269, A213 or equivalent with a minimum working pressure of 300 psi for process taps and sensing lines.
      b. Tubing hardness shall be Rb80 suitable for bending and flaring.
      c. Tubing shall be suitable for swaged type fittings. Oval tubing shall not be acceptable.
      d. Finished tubes shall be straight with a maximum length of 20 feet and have smooth ends free from burrs. Tubing shall be free from injuries, defects, and scratches and have a workmanlike finish. Tube ends shall be deburred prior to installation.
      e. All welding of stainless steel tubing shall be done at the factory. Field welding shall not be permitted.
      f. Fittings used to connect stainless steel tubing and fittings shall be swaged type or equal tube fittings.
      g. Tube thickness for process taps and sensing lines shall be 0.035" thick.
   2. Tube Fitting:
      a. The tube fitting shall produce a leak proof seal in pressure or vacuum service. It shall hold the tube with a colleting action, producing a firm grip on the tube without substantially reducing the tube wall thickness. It shall not torque the

b. Tubing during original or subsequent makeup of the connection and should use geometry rather than torque for makeup. It shall not require fitting disassembly for inspection before or after makeup.

c. The tube fitting shall consist of four machined pieces, i.e. body, front ferrule, back ferrule and nut. The design configuration of all components shall be such as to present surface-to-surface contact, one part to another, keeping unit stresses below galling levels. The tube seat counterbore in the body shall be faced flat 90 degree to the axis of the tubing to minimize tube expansion and subsequent galling.

d. The design proportions of all components shall be such as to preclude the fracturing of any part during installation. All component parts of the fitting shall be Type 316 stainless steel. The sealing and gripping power of the fitting shall be such that a compensating action between ferrules will overcome commercial variations in tubing wall thickness, hardness, diameter and installer skill. Front ferrule shall affect a long, smooth repeatable seal by sealing contact with body. Front ferrule shall always remain in a sprung condition to compensate for thermal stresses and to accomplish repeated make and break. There shall be no machined stop to preclude additional tightening in subsequent make up.

e. Stainless steel rear ferrules shall engage the tubing through a controlled hinging action. This controlled hinging action shall be achieved either by selectively hardening the rear ferrule nose while leaving the core in an annealed state, or by employing a machined recess on the back ferrule inside diameter in conjunction with uniform surface hardening. Either case facilitates the load induced rotation of the back ferrule nose onto the tubing at the integral hinge point. The hinging action of the rear ferrule allows for a strong surface grip on the tubing, while vectoring a reaction load to allow the front ferrule to be lifted into a sealing position. The rear ferrule shall collet the tubing surface, improving the performance of the tubing in systems of high impulse or vibration.

f. Fitting shall not require special tools or instruction for such normally encountered situations as maximum through flow, thick or thin wall tubing, and make and break service or connections to integral tube fitting ends on valves.

g. All metallic fittings shall have a gageable shoulder. There will be no radius at the point where the shoulder meets the neck of the fitting body. The gageable shoulder will allow a Gap Inspection Gage to be inserted between the nut and shoulder, 180 degrees flush around the neck of the fitting, to check for insufficient pull up. The Gap Inspection Gage will not fit between the nut and shoulder of a sufficiently pulled up fitting and it must be consistently reliable.

h. A two-ferrule flareless stainless steel tube fitting shall be produced under a Quality Assurance Program that has been audited by the ASME.

i. Stainless steel barstock material from which fittings are made shall be restricted to a maximum carbon content of .05 percent to provide better weldability and increased corrosion resistance. Inspection under a Statistical Quality Control program shall be done in accordance with Mil Std 105d, Level One. AQL level of 1 percent for major defects and 2.5 percent for minor defects shall be used. Any critical defect shall require the whole lot to be inspected.

j. All fittings including elbows, tees and valves identified with swaged end connections shall conform to these specifications.

k. The Contractor shall submit a sample of the tube fittings and the installation manual from the manufacturer.

l. Manufacturer:

1) Swagelok Company.

2) Or approved equal.

3. Tube Bending:

a. Bending shall result in smooth uniform bends without signs of flattening, kinking or wrinkling.

b. Hand Bending is not allowed. Bending shall be performed using a bench top tube bender. The bench top tube bender shall consist of a bend shoe, drive shaft, roller bracket assembly, roller adjustment knob and roller bracket lever. The bender shall have manual operation using a hand crank or be electrically driven. The tube bender shall have an indicator to identify the bending angle.

c. Bends near tube fittings shall maintain a minimum straight tube length form the bend to the fitting as required by the manufacturer of the fitting.

d. Bending shall be performed in accordance with the minimum tube bend radius identified by the manufacturer of the tubing.

2.03 MATERIAL FOR PIPING SUPPORT, SEISMIC RESTRAINTS AND PIPE ANCHORS

A. This paragraph specifies materials for pipe supports specified in Section 40 05 07, seismic restraints specified in Section 40 05 07.13, pipe anchors, certain expansion control elements specified in Section 40 05 07.16, and all associated appurtenances. Pipe Support, Seismic Bracing, and Pipe Anchor materials shall be suitable for outdoor installation as a minimum except for other exposure types. Provide Pipe Support, Seismic Bracing and Pipe Anchor components fabricated from materials as specified in the following table:

Environmental Exposure or Pipe Material	Materials [1]	Nuts, bolts, washers, and fasteners
Outdoor	Steel, hot dip galvanized after fabrication	Type 316 stainless steel
Indoor, Dry	Steel, hot dip galvanized after fabrication	Steel, Zinc plated or hot-dip galvanized after fabrication
Indoor, Wet	Type 316 stainless steel or FRP	Type 316 stainless steel
Chemical Corrosive	Fiberglass (FRP)	Type 316 stainless steel
Head Space	Type 316 stainless steel or FRP	Type 316 stainless steel
Submerged	Type 316 stainless steel or FRP	Type 316 stainless steel
Undefined	Type 316 stainless steel or FRP	Type 316 stainless steel
Stainless steel piping	Same type of stainless steel as the pipe or FRP	(per area as defined in this table)

Notes:

1. *Where materials as designated in drawing details or indicated in other specification sections, those requirements govern over the provisions of this table.*

2.04 PIPE AND VALVE COMPATIBILITY

A. Coordinate the selection of pipe materials, linings, and end connections so that valves operate properly over their entire range (e.g., sufficient disk clearance for butterfly valves). Support wafer style valves or spectacle flanges between flanges of equal inside diameter.

2.05 BONDING JUMPERS – NOT USED

2.06 JOINTS – GENERAL

A. Provide joints for disassembly within 3.0 ft of any connection to equipment, on both sides of structural penetrations, and within 2.0 ft of all threaded end valves.

B. Unless otherwise specified on the drawings or in equipment specifications, adapt all equipment connections to a flanged connection compatible with the connected piping system.

C. Flexible Joints at Structural Joint Crossings: Provide a flexible joint (or joints) on all piping crossing structural joints.

2.07 FLANGES AND OTHER COUPLINGS

A. Pipe connections shall be as shown on the Drawings and shall meet the required pressure class.

B. General requirements for flanges are as follows:
   1. Where raised-face and flat flanges are provided for connection, reface the raised-face flanges. Flange face to be flush with flat-faced companion flanges on flat-faced valve or equipment flanges.
   2. Provide flat-faced flanges on each side of butterfly valves.
   3. For steel piping, provide weld neck flanges on both sides of wafer or lug body valves.

C. Slip-on flanges that are attached to a pipe by means of set screws and gaskets (uni-flange, etc.) are not acceptable.

2.08 FITTINGS – GENERAL

A. Fittings are specified in the Piping System Schedules.

B. Provide eccentric reducers in horizontal lines with the flat side on top, unless specified otherwise on the drawings (e.g., flow meters in horizontal runs requiring submergence).

C. Provide concentric reducers in vertical lines, unless otherwise specified on the drawings.

D. Provide reducers upstream and downstream of flow measurement devices to adapt line size to the specified flow measurement device dimension. Coordinate with the specific instrument requirements.

E. Provide long radius (greater than or equal to 1.5 x nominal diameter) elbows unless otherwise specified on the drawings.

2.09 GASKET MATERIALS

A. For flat faced flanges, use full-face gaskets. For raised-face flanges, use ring type gaskets. Conform to ASME B16.21.

B. Refer to the Piping System Schedule for the specified gasket material. Material designations used in the detailed pipe specification sheets are as follows:
   1. EPDM: ethylene-propylene-diene-terpolymer 70 durometer
   2. Neoprene: neoprene (black) 70 durometer
   3. Nitrile: nitrile (Buna N)
   4. SBR: Styrene-butadiene (red)
   5. Natural rubber: natural rubber
   6. Compressed synthetic fibers (Kevlar): ASTM F104 (F712400), and neoprene binder: 1.7 MPa (ASTM F152), 0.2 mL/h Leakage Fuel A (ASTM F37)
   7. Compressed synthetic fibers (Kevlar): ASTM F104 (F712400) and SBR binder: 1.7 MPa (ASTM F152), 0.1 mL/h Leakage Fuel A (ASTM F37)
   8. Gylon - Type 1: Garlock Style 3500: 1.35 MPa (ASTM F152), 0.22 mL/h Leakage Fuel A (ASTM F37)
   9. Gylon - Type 2: Garlock Style 3510: 1.35 MPa (ASTM F152), 0.04 mL/h Leakage Fuel A (ASTM F37)
   10. CPE - Chlorinated Polyethylene
   11. Spiral-wound: Flexitallic SS316L, graphite impregnated per ASME B16.20
   12. PTFE bonded EPDM, full-face gaskets
   13. Viton/FKM – Fluoroelastomer, 75 Durometer

2.10 DISSIMILAR METAL CONNECTIONS

A. Where dissimilar metals are to be connected, provide dielectric fittings and/or isolating flanges, including bolt sleeves and washers. Dissimilar metal joints will include joints between steel and ductile iron, steel and stainless steel, ductile iron and stainless steel and between any other dissimilar metals.

2.11 NOT USED.

2.12 STRUCTURAL ELEMENT PENETRATIONS

A. Penetrations through structural elements are referenced to a custom detail or Standard Detail. Where a penetration detail is not specified, conform to the Standard Detail relevant to the type of structure, exposure, and type of pipe.

B. Provide pipe sleeves capable of supporting the loads applied during placement of concrete or during block work erection.

2.13 PIPE MARKERS, DETECABLE WARNING TAPE, AND TRACER WIRE

A. Pipe marker, detectable warning tape, and tracer wire materials per Section 40 05 45.

PART 3 EXECUTION

3.01 PREPARATION

A. Prior to installation, inspect, and field measure to ensure that previous work is not prejudicial to the proper installation of piping.

B. Pothole existing pipe at connections to new pipe to confirm material and joints prior to submittal of pipe layout drawings.

C. The Drawings are, in part, diagrammatic, make all minor modifications to suit installed equipment and structural element locations and elevations and coordinate with electrical construction.

D. Provide details of connections to new and existing equipment, piping, and structures in piping layout drawing submittals. Unless otherwise specified on Drawings, piping fitting angles and vertical and horizontal pipe locations shall be determined by Sub-contractor.

E. Piping arrangements indicated on the drawings have been estimated from the approximate configuration of the type of equipment listed in the equipment specifications. If the equipment to be provided does not have the same configuration, modify the piping arrangement as necessary. Include any piping modifications in shop drawings submitted prior to fabrication or installation.

F. For installation of pipes, use qualified and trained personnel such as personnel trained to ASME B31.1.

3.02 PIPE SUPPORT, ANCHORAGE, AND SEISMIC BRACING

A. Support piping with anchor brackets, guides, saddles, or hangers. Pipe movement due to thermal expansion and internal pressure and dynamic forces shall be accommodated by pipe springing, anchors, expansion joints, and guides selected for the specific purpose by the Design Professional retained under the provisions of this Section. Provide supports on each run at each change of direction.

B. Provide seismic bracing as required to resist seismic loads.

C. Do not use existing pipes and supports to support new piping. Existing tunnel pipe support racks can be used for new pipe if the Design Professional determines that the existing rack components are adequate to support the additional load.

D. Install expansion loops, anchors, expansion joints, and guides where specified on the drawings.

3.03 PIPING CONNECTIONS TO EQUIPMENT/MACHINES

A. Align piping at equipment/machine connections in all planes to permit insertion of bolts at bolted connections or coupling screwed connections without using jacks, come-a-longs or other mechanical means to align field piping with the connections at the machines.

B. Do not force bolts into mating flange bolt holes. Align flange bolt holes to permit insertion of bolts by hand (without tools, hammering, or prying).

C. Use of 'dutchmen' mitered sections or similar specials to achieve the required alignment with machine connections are strictly prohibited.

D. Provide equipment connection fittings per Section 40 05 06.16 as specified on the drawings.

3.04 JOINT AND COUPLING OPTIONS

A. Provide pipe connection (joint and coupling) options as specified in the Piping System Schedule.

B. If a Piping System Schedule lists several connection options, then any of the listed options may be used for a particular pipe material, but the selected option shall be used consistently. For example, if flanged or grooved connections are specified and grooved are represented on the Drawings, then flanged may be installed in lieu of the grooved couplings specified on the drawings.

C. Connecting straight runs of pipe by welding is acceptable only where the individual Piping System Schedule allows welding as a connection option.

D. Where connections other than those indicated on the Piping System Schedule are specified on the Drawings, locate the connection specified on the drawing at the specific location indicated on the drawing.

E. Provide rigid, non-rotating connections at all valves and equipment.

3.05 SMALL BORE UTILITY PIPING

A. Field route small bore (generally less than 3-inch) diameter branch piping for utility services.

B. In general, small bore utility branch piping is not specified on the Drawings unless a specific pipe routing or configuration is to be provided or where necessary to show valves or instrumentation requiring electrical connections.

C. Distribution lines for small bore utility piping are specified on the Drawings along with service connection routes to locations that require utility service piping.

D. Install small bore utility piping that must be drained to provide freeze protection with a continuous slope down to the drain.

3.06 BONDING

A. Bonding jumpers shall be as specified in this Section.

B. Bonding shall be provided for all process air pipelines to control static electricity. Provide bonding jumpers to the following piping systems: PA

C. Construct electrically continuous piping for the process services listed above and connect directly or indirectly to earth ground.

D. Provide bonding jumpers where sections of pipe are interrupted with non-conducting sections, fully lined valves that are not through-bolted or other interruption in continuity.

E. Remove any coatings, dirt, grease or other contaminants from flanges where jumpers are to be installed. Apply sufficient conductive, anti-oxidant compound to protect the entire ferrule from galvanic action and hydrogen sulfide attack.

3.07 DRAIN PIPING

A. Run horizontal drainage piping as straight as practicable and at uniform pitch.

B. Install pipe 3-inch or less in diameter with slope of not less than two percent, unless otherwise specified on the Drawings.

C. Install pipe larger than 3-inch diameter with slope of not less than one percent, unless otherwise specified on the Drawings or required by the Plumbing Code.

3.08 SLEEVES

A. Unless otherwise noted in the specified pipe penetration details or otherwise approved by the Engineer, provide sleeves where piping passes through a wall, floor, or ceiling.

B. Locate and place sleeves prior to construction of cast-in-place elements and prior to the construction of concrete and masonry building elements.

3.09 PIPE JOINTS AND CONNECTIONS

A. Field cuts for glass-lined pipe are not permitted.

B. Cut pipe with appropriate tool and deburr.

C. Make joints tight. Test and remake leaking joints with new materials. Do not use thread cement or caulking to remake joints.

D. Do not use sharp toothed wrench in making up brass pipe, or chrome plated items.

E. Provide thread forms and length in accordance with ASME standards. Use lubricant or sealant on male threads suitable for proposed pipe service.

F. Clean joints before soldering. Use flux and alloy appropriate for specified operating temperature and pressure.

G. Welding procedures, welder certification/qualification, and weld testing per ASME Section IX, Boiler and Pressure Vessel Code. Make welds per the specified standard when ASME B31.1 or ASME B31.3 are specified for a Piping System.

H. Coat gasket with gasket manufacturer's recommended lubricant between flange faces.

3.10 TAKEDOWN COUPLINGS

A. Takedown Couplings: Provide takedown couplings at the locations shown on the Drawings in accordance with this Section.

B. Provide takedown couplings at changes in piping direction and where specified on the Drawings on straight runs of pipe.

C. Provide screw unions, flanged or grooved end coupling type joints as takedown couplings.

D. Use flanged or grooved end joints on pipelines 1.5-inch diameter and larger.

E. Where piping passes through walls provide takedown couplings within 40 inches of the wall.

F. Provide a union or flanged connection within 24 inches of each threaded end valve.

3.11 INSTALLATION OF BURIED PIPE AND PIPE BELOW STRUCTURES

A. Trenching and backfill for buried pipe: conform to Section 31 23 00.

B. Pipe laying and bedding: conform to Section 31 23 00.

C. Restrain all plugs, caps, tees and bends in buried pressure piping systems by means of restrained joints as specified in the respective Piping System Schedule.

D. In accordance with Section 40 05 06.23, and where specified on the Drawings, provide flexibility per specified details where buried pipe passes under, through, or is connected to structures. Provide restrained joint connections or provide restraints across each un-restrained joints.

E. Install pipe in straight alignment. Do not exceed 3/8-inch variance over 30 ft from the true alignment in any direction.

F. Slope gravity lines uniformly from point of origin to discharge.

G. Ensure the pipe alignment stays true during and after placement of concrete encasement.

H. Ensure that the method used to prevent pipe uplift during placement of concrete encasement results in an invert and crown true to intended grade.

I. Maintain circular cross section of pipe.

J. Provide lean concrete below the underside of the slab or footing for backfill over pipe laid below structures when pipe is less than 6 inches below the underside of the slab or footing, unless specified otherwise. Place concrete in accordance with Section 03 30 00.

K. Provide Heat-Shrinkable Cross-Linked Polyolefin Coating or Tape Wrap coating on all flanged, grooved, and welded joints that are buried or below structures.

L. Provide Petrolatum Tape wrap on all valves and mechanical pipe couplings that are buried or below structures. Install per manufacturer's recommendations. Candidate Manufacturers:
   1. Denso Densyl Tape
   2. #1 Wax Tape
   3. Or approved equal

M. Use anti-seize compound with all stainless steel nuts and bolts.

N. Provide detectable warning tape for all buried pipe. Provide tracer (locate) wire as specified in Section 40 05 45.

3.12 EXPOSED INSTALLATION

A. Fabricate and install domestic hot and cold water piping, sanitary piping and storm drainage piping in accordance with the Plumbing Code.

B. Provide pipe system layout in accordance with the following criteria:
   1. Drawings show general layout of piping. Exact dimensions determined by Sub-contractor.
   2. Maintain minimum clear areas through tunnels and principal access aisles as specified in this Section.
   3. Expanding or swaging of tubing to fit IPS (Iron Pipe Size) fitting sockets is not permitted.
   4. Use reducing fittings where change in pipe size occurs.
   5. Use couplings only where pipe runs are longer than standard supplied pipe lengths.
   6. Make exposed polished or enameled connections to fixtures or equipment with special care to avoid damage to finished surfaces.
   7. Make changes in direction only with fittings.
   8. Install piping with not less than minimum slope to ensure adequate drainage and venting.
   9. Maintain clear areas around equipment to allow adequate access for maintenance as specified in this Section.
   10. Ensure valve operators are accessible from floor level. Provide chain wheel operators for valves with centerline elevations of 7 feet or above.

11. Ensure piping ancillaries and in-pipe instrumentation is installed in accessible locations which do not create problems for traffic in the clear areas.

C. Make adequate provision in piping and pipe support systems for expansion, contraction, slope, and anchorage.

D. Install pipe support system to adequately secure the pipe and to prevent undue vibration, sag or stress.

E. Install expansion joints where specified on the Drawings or where required by the Design Professional, to allow for piping expansion and contraction.

F. Install expansion loops or bends where specified, or required by the Design Professional, to allow for proper pipe expansion. Construct expansion loops with long radius welded bends.

G. Provide temporary supports as necessary during construction to prevent overstressing of equipment, valves or pipe.

H. Accurately cut all piping for fabrication to field measurements.

I. Install pipes in straight alignment and parallel to wall. Do not exceed 3/8-in variance over 30 ft from the true alignment, in any direction.

J. Fabricate and assemble pipe runs so that the pipework is not stressed to achieve the desired alignment and that no stresses are transferred to equipment or equipment flanges. Unless stipulated by the Design Professional to address significant thermal strain, and accepted by the Contractor, the "springing" of pipe and fittings to ensure alignment is not permitted. Undo and subsequently remake all pipework connections where so instructed by the Contractor to ensure that unintended springing does not occur. Take care not to damage equipment, valves, or flanges.

K. Slope instrument air piping to condensate traps.

L. Do not cut or weaken the building structure to facilitate installation of piping.

M. In parallel pipe runs, offset flanges and/or grooved joint fittings by a minimum of 8 inches longitudinally to allow for proper access.

N. In vertical pipe runs of pipe diameter greater than 10 inches, provide 8-inch long spool piece on lower side of each valve.

O. Do not install water piping over electric switchboards, transformers, cable tray or electric motor starters.

P. Provide pipe markers for all exposed pipe.

3.13 THREADED JOINTS

A. Conform to the requirement of ASME B31.1.

B. Ream the end of all pipes to remove all burrs and cuttings when fabricating threaded joints.

C. Clean out pipe and repair linings and coatings prior to joining.

D. Apply Teflon tape to male threads and join pipe. Use both Teflon tape and Teflon sealing compound on stainless steel pipe threads. Do not apply extra tape to make up for slack in the joint.

3.14 FLANGED JOINTS

A. Maintain consistent flange bolt hole positions along the entire length or run of the pipe.

B. For pipe installed with a horizontal axis, position flange bolt holes so that the vertical centerline of the flange face bisects the arc between flange bolt holes (“Two-Holed”).

C. For pipe installed with a vertical axis, position flange bolt holes so that the horizontal centerline of the flange face bisects the arc between flange bolt holes and is perpendicular to the closest structural wall (“Two-Holed”).

D. Clean flanges and gaskets prior to connection.

E. Lubricate gaskets with gasket manufacturer’s recommended lubricant and apply anti-seize compound to all bolts.

F. Bring flanges into close parallel and lateral alignment.

G. Tighten bolts progressively. Proceed from side to side of the flange.

H. Use proper length bolts for each size flange on flanged connections. Washers may not be used to take up excess bolt length. Provide approximately two full threads bolt projection beyond nuts. Bolts with excessive length of exposed threads will not be permitted. All-thread rod is not acceptable for bolting flanges.

I. When joining steel to cast iron flanges, take care to avoid damage to the cast iron flange. Ensure both flanges are flat-faced and use full face gaskets.

J. Align flanges which connect piping to mechanical equipment to close parallel and lateral alignment prior to tightening bolts. Do not place strain on the equipment.

K. Allow a minimum of 6 inches’ clearance to face or 8 inches to edge of flange to wall, floor, or ceiling unless otherwise specified.

3.15 INSULATION

A. Insulate piping systems on the following piping systems:
   1. MBR Air Scour System Piping
   2. BNR Aeration Air Piping

3.16 FLEXIBLE HOSE CONNECTORS

A. Accurately align pipelines to receive flexible connectors before installing the connectors. Do not stretch, compress, misalign or offset the connectors.

B. Align and install each flexible connector in accordance with the manufacturer's instructions.

C. Support, anchor and guide the piping so that the flexible hose connectors are not required to absorb any axial compression or elongation.

D. Do not torque or twist the flexible connectors.

E. Check bolt tightness and tighten where necessary, a maximum of one week after commissioning and periodically thereafter.

3.17 EXPANSION JOINTS

A. Accurately align pipelines to receive expansion joints before installing the joint. Do not stretch, compress or offset the joint to fit the piping. Install expansion joints in accordance with manufacturer’s instructions prior to releasing preload.

B. Align and install each expansion joint in accordance with EJMA standards and with the manufacturer's written instruction; properly guide and anchor all expansion joints. No lateral movement is permitted on compensator type expansion joints.

C. On rubber expansion joints, check bolt tightness, and tighten where necessary one week after Commissioning is completed.

3.18 REPAIR/RESTORATION

A. Repair pipe with damaged shop-applied protective linings in accordance in accordance with specified standard (e.g. AWWA C210) or accordance with the lining manufacturer's directions, if no standard is cited.

B. Damaged glass lining cannot be repaired. Replace piping with damaged glass lining.

C. Patching inserts, overlays, or pounding out of dents is not be permitted.

D. Repair pipe with damaged protective coatings and holdback areas for welding and other field fabrication, as follows:
   1. For shop-applied coatings, not subject to Section 09 90 00 requirements, in accordance with specified standard (e.g. AWWA C210) or in accordance with the coating manufacturer's directions, if no standard is cited.
   2. For coatings applied pursuant to Section 09 90 00 requirements, apply repair coatings in conformance with the applicable Section 09 90 00 coating system, including thickness and stipulated preparation of the lowest full thickness coating layer (i.e. exposed metal would require full profile preparation and specified multi-layer coating restoration).

3. Prepare areas to be repaired not less than 2-inches beyond damaged areas and feather repair coating into adjacent areas.
4. Repair to provide equivalent protection to undamaged coatings and a uniform appearance when judged from 4 feet away.

E. Other requirements may be stipulated in related piping sections.

3.19 FIELD QUALITY CONTROL

A. Inspections:
1. The Design Professional shall Inspect and certify the piping installation for conformance with requirements of Contract specifications.
2. Submit the Design Professional's final report before beneficial occupancy by the City.
3. See Section 01 45 33 for additional inspections by the City.

3.20 TESTING

A. Provide 24 hours notice prior to testing.

B. Do not insulate or conceal work until piping systems are tested and have met all required criteria.

C. Complete any required weld tests.

D. Supply all water, air, and inert gases required for pressure testing.

E. Supply all pumps, compressors, gauges, etc. required for testing.

F. Install air threadolets, air relief valves, and line fitting valves as necessary to complete testing. Remove after testing and plug threadolets.

G. Cap or plug all lines which are normally open ended. Remove on completion of testing.

H. Provide all temporary thrust restraints necessary for testing. Remove upon completion of testing.

I. Test all underground lines prior to backfilling. Do not place concrete encasement until lines are tested and have met all required criteria.

J. Test all existing piping where it connects to new piping to the first valve in the existing piping. Repair any failures in existing piping which occur as a result of the test after informing the Contractor of such failure.

K. Isolate all pumps and low pressure equipment and appurtenances during testing so as not to place any excess pressure or thrust forces on the equipment.

L. Where defective material or equipment is identified, repair or replace using new material.

M. Flush and drain liquid pipes after pressure tests. Purge all gas pipes after pressure tests using inert gas.

N. Dispose of flushing water in manner approved by the Contractor, which causes no damage to buildings or siteworks.

3.21 HYDROSTATIC PRESSURE TESTING OF LIQUID LINES

A. Hydrostatically test all lines normally used for the conveyance of liquids using water as the test medium, unless otherwise specified in this Section.

B. Test pressures and durations as specified in the Piping System Schedules.

C. Ensure all lines are filled with water. Bleed air from all high spots using the taps provided specifically for that purpose.

D. Lined pipelines: Allow filled pipeline or section thereof to stand under a slight pressure for at least 8 hours (24 hours for cement mortar lining) to allow the lining to absorb water and to allow the escape of air from air pockets.

E. Zero leakage is permitted throughout the specified test period for all exposed piping, buried insulated piping, and any liquid chemical lines.

F. Show evidence of leakage rates below 0.02 gal per hour per inch pipe diameter per 100 ft of pipe length for buried piping, unless otherwise specified.

G. Test drains in accordance with the Plumbing Code.

H. For hydraulic and lube oil systems, test using the medium of service. Provide zero loss of pressure throughout the specified test period.

3.22 PNEUMATIC PRESSURE TESTING

A. Use nitrogen gas or oil free dry air to test piping systems where nitrogen or air is the specified testing medium in the Piping System Schedule.

B. Submit a testing plan and a safety plan for each piping system that will be pressure tested with nitrogen gas or oil free dry air. Do not perform pressure testing with air or nitrogen until a favorable review of the safety plan and testing plan for the piping system has been returned from the Contractor. Comply with all workplace safety and pressure vessel safety codes and guidelines.

C. Provide a separate pressure relief valve for pneumatic pressure testing.

D. Locate pressure relief valve within visual range of the test gauge and with exhaust to a safe location.

E. Set relief valve at not more than full test pressure plus 10 percent.

F. Continuously monitor and control testing to assure personnel safety and piping integrity.

G. Remove all personnel from areas where piping will be subjected to pressure tests and prevent entry into testing areas until test pressure has been relieved.

H. Protect installed work from potential damage from pressure testing failures. The Sub-contractor is responsible for any damage or injury resulting from failed pressure testing with air or nitrogen.

I. When using nitrogen or air to test steel or stainless steel pipelines, gradually introduce the test gas up to a pressure of 45 psig or 1/3 of specified test pressure, whichever is less.

J. While maintaining this pressure, test lines for leaks using soapy water.

K. When the line is free from leaks at this pressure, increase by increments of 50 psig or 1/3 of specified test pressure (whichever is less) to the specified test pressure.

L. After each increment, retest using soapy water; take corrective action as necessary.

M. When the system is free from leaks at the test pressure, depressurize the system slowly.

N. To prevent the entrance of water or moisture into the medium source, disconnect the test source from the system and cap.

O. Where specified, maintain nitrogen pad after testing until the line is put into service. Label any piping for which a pad is provided and maintained.

P. Provide high purity nitrogen gas used for testing, in cylinders fitted with pressure regulators for 0 to 300 psig and all necessary fittings and adaptors necessary to complete the connection between the source and the system header. Provide self-relieving type pressure regulator that vents to the atmosphere and include a throttling valve.

Q. Provide oil free air with a relative humidity of zero for testing. Provide all fittings, adaptors, accessories, and the pressure regulator and throttling valve that are suitable for pressure testing with air and rated for 300 psig service.

3.23 PRESSURE TESTING OF AIR AND VAPOR LINES

A. Hydrostatically or pneumatically pressure test, as specified in the Piping System Schedules, all lines normally used for the conveyance of gas, air, and/or vapor in accordance with ASME procedures for testing pressure piping and CAN/CGA B149.6 for buried digester gas piping. Pneumatically test all instrument air lines in accordance with ISA-S7.0.01 and digester gas piping in accordance with CAN/CGA B149.6.

B. For air lines to be hydrostatically tested, check support system to ensure it is capable of withstanding loads imparted by test method. Provide any additional supports necessary in a manner acceptable to the Contractor. At the Contractor's request, provide calculations indicating design of temporary support system.

C. Test pressures are identified in the Piping System Schedule.

D. Zero leakage rate for insulated systems, and systems tested with water is required at the specified test pressure through the test period. Prior to commencing test using air, ensure air will be at ambient temperature and specified test pressure.

E. Do not exceed the maximum specified leakage rate during the test period for all other systems tested with air.

F. Remake all joints which display leakage and retest.

3.24 NOT USED

3.25 CLEANING AND FLUSHING

A. After installation and prior to testing, perform initial cleaning of process and utility lines. Clean piping greater than 6 inches and less than 24 inches by passing a tightly fitting cleaning ball or swab through the pipeline, unless specified otherwise. Lines greater than 24 inches may be cleaned manually or with a cleaning ball or swab. Give lines smaller or equal to 6 inches an initial flush or purge.

B. After initial cleaning, connect the piping systems to related process and mechanical equipment. Insert temporary screens, provided with visible locator tabs, in the suction of pumps and compressors in accordance with the following table:

Suction size, in.	Maximum screen opening, in.
0 – 1	1/16
1-1/4 – 3	1/4
3-1/2 – 6	1/2
Over 6	1

C. Maintain the screens during testing, flushing/purging, initial startup, and the initial operating phases of the commissioning process. In special cases and with the Contractor's acceptance, screens may be removed for performance tests. Install screens for clear water testing and initial operation on liquid systems handling solids. Initial operation on solids systems following clear water testing may be without screens.

D. Unless specified otherwise, flush liquid systems after testing, with clean water and screens in place. Maintain flushing for a minimum period of 15 minutes and until no debris is collected in the screens.

E. Remove the screens and make the final connections after the screens have remained clean for a minimum of 24 consecutive hours of operation. Keep screens in place for 24 hours of clean water operation on solids handling systems; remove prior to placing the system into solids handling service.

F. In air systems with pipe sizes less than or equal to 6 inches, purge with air and/or inert gases before testing. Upon completion of testing and cleaning, drain and dry the

piping with a dry air stream. Satisfy ANSI/ISA-S7.0.01 standards for instrument air systems.

G. Not used.

H. Not used.

3.26 DISINFECTION

A. Flush and disinfect lines intended for potable water service after testing in accordance with AWWA C651.

B. All pipelines from the inlet to RO Feed Pumps shall be disinfected prior to putting them to operation.

END OF SECTION

THIS PAGE INTENTIONALLY LEFT BLANK

SECTION 40 05 06.13

JOINT GASKETS FOR PUSH-0N JOINTS

PART 1 GENERAL

1.01 DESCRIPTION

A. This section specifies rubber gaskets for push-on compression type joints used with fabricated steel and stainless steel pipes, reinforced concrete pipe, concrete cylinder pipe, ductile iron pipe, and cement mortar lined and coated steel pipe.

1.02 QUALITY ASSURANCE

A. References:

1. This section contains references to the following documents. They are a part of this section as specified and modified. Where a referenced document contains references to other standards, those documents are included as references under this section as if referenced directly. In the event of conflict between the requirements of this section and those of the listed documents, the requirements of this section shall prevail.
2. Unless otherwise specified, references to documents shall mean the documents in effect at the time of Advertisement for Bids or Invitation to Bid (or on the effective date of the Agreement if there were no Bids). If referenced documents have been discontinued by the issuing organization, references to those documents shall mean the replacement documents issued or otherwise identified by that organization or, if there are no replacement documents, the last version of the document before it was discontinued. Where document dates are given in the following listing, references to those documents shall mean the specific document version associated with that date, regardless of whether the document has been superseded by a version with a later date, discontinued or replaced.

Reference	Title
ASTM D395	Rubber Property--Compression Set, Test for
ASTM D412	Rubber Properties in Tension, Test for
ASTM D471	Rubber Property--Effect of Liquids, Test for
ASTM D573	Rubber--Deterioration in an Air Oven, Test for
ASTM D1149	Rubber Deterioration--Surface Ozone Cracking in a Chamber (Flat Specimens), Test for
ASTM D2240	Rubber Property--Durometer Hardness, Test for

B. Testing:

1. Certified copies of test reports indicating that the gasket material has been tested and that the results of the tests comply with the requirements specified in paragraph 2.02 shall be provided as product data.

PART 2 PRODUCTS

2.01 MATERIALS

A. Gasket stock shall be a synthetic rubber compound in which the elastomer is neoprene. The compound shall contain no less than 50 percent by volume neoprene and shall be free from factice, reclaimed rubber and other deleterious substances.

2.02 PHYSICAL REQUIREMENTS

A. The compound shall meet the following physical requirements when tested in accordance with the specified ASTM standards.

B. Tensile (ASTM D412):
   1. The tensile strength shall be 1500 psi minimum and the ultimate elongation shall be 350 percent minimum.

C. Hardness (ASTM D2240, TYPE A DUROMETER):
   1. The compound shall have a hardness in the range of 35 to 50 for concrete spigots and 50 to 65 for steel spigots.

D. Compression Set (ASTM D395):
   1. The compression set shall not exceed 20 percent when compressed for 22 hours at 70 degrees C.
   2. The test specimens shall be circular discs cut from the gaskets. Test specimens shall be 0.500 (± 0.005 - 0.025) inches in height. The diameter of the test specimen shall be that of the gasket but not to exceed 1.129 ± 0.010 inches in diameter.

E. Aging (ASTM D573):
   1. The test specimen deterioration shall be less than 20 percent reduction in tensile strength, 40 percent reduction in ultimate elongation, and 15 points increase in hardness.

F. Effect of Liquids (ASTM D471):
   1. The maximum volume change in oil and in water shall be as follows:
      a. Oil: 100 percent in ASTM oil No. 3.
      b. Water: 15 percent.
   2. The test specimens shall have a thickness of 0.080 ±0.005 inches and shall be circular discs cut from the gasket.

G. Ozone Cracking (ASTM D1149):
   1. The test specimen shall be a gasket loop mounted to give at least 20 percent elongation. There shall be no cracking visible at two times magnification of the gasket after 100 hours exposure to 1 mg/l ozone at 40 degrees C.

2.03 PRODUCT DATA

A. In accordance with Section 01 33 00, the Contractor shall provide certified copies of test reports specified in paragraph 1.02 Testing.

PART 3 EXECUTION

3.01 INSTALLATION

A. The gaskets shall be installed in accordance with the manufacturer's recommendations.

END OF SECTION

THIS PAGE INTENTIONALLY LEFT BLANK

SECTION 40 05 06.16
PIPING CONNECTIONS

PART 1 GENERAL

1.01 DESCRIPTION

A. This section specifies the following methods of connecting metallic piping: flanges, threading, mechanical couplings, equipment connection fittings, dielectric unions, insulating joints, and welding.

1.02 REFERENCES

A. This section contains references to the following documents. They are a part of this section as specified and modified. Where a referenced document contains references to other standards, those documents are included as references under this section as if referenced directly. In the event of conflict between the requirements of this section and those of the listed documents, the requirements of this section shall prevail.

B. Unless otherwise specified, references to documents shall mean the documents in effect at the time of Advertisement for Bids or Invitation to Bid (or on the effective date of the Agreement if there were no Bids). If referenced documents have been discontinued by the issuing organization, references to those documents shall mean the replacement documents issued or otherwise identified by that organization or, if there are no replacement documents, the last version of the document before it was discontinued. Where document dates are given in the following listing, references to those documents shall mean the specific document version associated with that date, regardless of whether the document has been superseded by a version with a later date, discontinued or replaced.

Reference	Title
ASME BI.1	Unified Inch Screw Threads (UN and UNR Thread Form)
ASME BI.20.1	Pipe Threads, General Purpose (Inch)
ASME B16.1	Cast Iron Pipe Flanges and Flanged Fittings
ASME B16.5	Pipe Flanges and Flanged Fittings
ASME B18.2.1	Square and Hex Bolts and Screws Inch Series
ASME B18.2.2	Square and Hex Nuts (Inch Series)
ASME B31.1	Power Piping
ASME B31.3	Process Piping
ASME Section IX	Boiler and Pressure Vessel Code; Welding and Brazing Procedures, Welders, Brazers, and Welding and Brazing Operators Qualifications
ASTM B98	Copper-Silicon Alloy Rod, Bar and Shapes
ASTM F37	Standard Test Methods for Sealability of Gasket Materials
ASTM F104	Standard Classification System for Nonmetallic Gasket Materials

Reference	Title
ASTM F152	Standard Test Methods for Tension Testing of Nonmetallic Gasket Materials
ASTM F593	Stainless Steel Bolts, Hex Cap Screws, and Studs
AWWA C111	Rubber-Gasket Joints for Ductile-Iron Pressure Pipe and Fittings
AWWA C206	Field Welding of Steel Water Pipe
AWWA C207	Steel Pipe Flanges for Waterworks Service-Size 4 in. through 144 in.
AWWA C219	Bolted, Sleeve-Type Couplings for Plain-End Pipe
AWWA C550	Protective Epoxy Coatings for Valves and Hydrants
AWWA C606	Grooved and Shouldered Joints
AWWA M11	Steel Pipe-A Guide for Design and Installation
NSF 61	Drinking Water System Components - Health Effects

1.03 SUBMITTALS

A. In addition to the material listed in the detailed specification, the following submittals shall be provided in accordance with Section 01 33 00:
   1. For Equipment Connection Fittings used in pumping applications submit thrust rod stretch calculations in accordance with paragraph 2.02 Equipment Connection Fittings. and dimensional layout data.

PART 2 PRODUCTS

2.01 FLANGE ASSEMBLIES

A. Flanges
   1. General: Flanges shall either be flat flanges or convoluted ring flanges as specified in the following paragraphs.
   2. Flat Flanges: Cast iron flanges shall be faced in accordance with ASME B16.1. Where companion flanges are used, the flanges on pipe shall be refaced to be flush with the companion flange face. Class 150 and Class 300 forged steel flanges shall be raised face conforming to ASME B16.5. Lightweight slip-on flanges shall be plain face conforming to AWWA C207, Class B and ASME B16.5. Unless otherwise specified, steel flanges shall be ASME B16.5, Class 150 or AWWA C207, Class D. Class E AWWA flanges shall be provided where test pressure exceeds 175 psi. Plain faced flanges shall not be bolted to raised face flanges.
   3. Convoluted Ring Flanges: Convoluted ring flanges shall be ductile iron, forged steel or cast stainless steel, designed to bear on hubs welded to the pipe and shall be as manufactured by Improved Piping Products or approved equal. The flange joints shall be rated for not less than 150 percent of the test pressures listed in Section 40 05 01 and shall conform to the requirements of ASME B 16.5 and AWWA C207. The flange manufacturer shall be prepared to demonstrate, by certified pressure test that the flanges will meet these requirements.

B. Gaskets:

1. Gasket material shall be as specified in paragraph 2.03.
2. Gaskets for plain faced flanges shall be the full face type. Thickness shall be 1/16 inch for pipe 10 inches and less in diameter and 1/8 inch for pipe 12 inches and larger in diameter. Unless otherwise specified, gaskets for raised face flanges shall match the raised face and shall be 1/16 inch thick for pipe 3-1/2 inches and less in diameter and 1/8 inch thick for pipe 4 inches and larger.

C. Bolts:

1. Flange assembly bolts shall be ASME B18.2.1 standard square or hexagon head bolts with ASME B18.2.2 standard hexagon nuts. Threads shall be ASME Bl.1, standard coarse thread series; bolts shall be Class 2A, nuts shall be Class 2B. Bolt length shall conform to ASME B16.5.
2. Unless otherwise specified, bolts shall be carbon steel machined bolts with hot pressed hexagon nuts for carbon steel piping. Bolts for submerged service, stainless steel piping, and all plastic piping shall be made of Type 316 stainless steel in conformance with ASTM F593, marking F593F. Corresponding nuts shall be stainless steel. Bolts and nuts for buried service shall be made of noncorrosive high-strength, low-alloy steel having the characteristics specified in AWWA C111/A21, regardless of any other protective coating. Where washers are required, they shall be of the same material as the associated bolts.

2.02 MECHANICAL COUPLINGS

A. Sleeve-Type Couplings:

1. Unless otherwise specified, sleeve-type mechanical pipe couplings shall be Smith-Blair Type 411, Dresser Style 38, or approved equal, with the stop removed from the middle ring. Reducing couplings shall be Smith-Blair Type 415, Dresser Style 62, or approved equal. Sleeve-type flanged coupling adapters shall be Smith-Blair Type 913, Dresser Style 128, or approved equal. Insulating couplings shall be Smith-Blair Type 416, Dresser Style 39, or approved equal.
2. Bolts for submerged and buried service shall be made of Type 316 stainless steel in conformance with ASTM F593, marking F593F. Nuts for submerged service shall be made of copper-silicon alloy bronze conforming to ASTM B98, alloy C65100, designation H04, or alloy C65500, designation H04. Bolts and nuts for buried service shall be made of noncorrosive high-strength, low-alloy steel having the characteristics specified in AWWA C111/A21, regardless of any other protective coating. Where washers are required, they shall be of the same material as the associated bolts.
3. Gaskets shall be as specified in paragraph 2.03 and AWWA C111.

B. Plain End Couplings:

1. Plain end pipe couplings for pipe sizes 6 inches and smaller shall be Gustin-Bacon 200, Victaulic Style 99, or approved equal for Schedule 80 pipe and Gustin-Bacon 205, Victaulic Style 90, or approved equal for lighter weight pipe. Plain end couplings for pipe sizes 8 inches and larger shall be Gustin-Bacon 200, Victaulic Style 99, or approved equal. Unless otherwise specified, bolts and nuts shall comply with AWWA C606.

2. Gaskets shall be as specified in paragraph 2.03 and AWWA C606.

C. Grooved End Couplings:

1. Grooved end flexible-type couplings shall be Gustin-Bacon 100, Victaulic Style 77, or approved equal. Grooved end rigid-type couplings shall be Gustin-Bacon 120 Rigi-Grip, Victaulic Style 07 Zero-Flex, or approved equal. Flexible-type couplings shall be used for all piping greater than 12 inches in diameter; for pipe 12 inches in diameter and less in rack-mounted tunnel piping applications; and for grooved joints adjacent to pump or blower suction and discharge where grooved couplings are used for noise and vibration control. All other applications for piping 12 inches in diameter and less shall utilize rigid-type couplings. Grooved end flanged coupling adapters shall be either Gustin-Bacon 154, Victaulic Style 741, or approved equal. Snap-joint grooved end couplings shall be Gustin-Bacon 115, Victaulic Style 78, or approved equal. Cut grooves are not permitted on fabricated or lightwall pipe.
2. Unless otherwise specified, bolts and nuts shall comply with AWWA C606. Bolts for submerged service shall be Type 316 stainless steel in conformance with ASTM F593, marking F593F. Nuts for submerged service shall be made of copper-silicon alloy bronze conforming to ASTM B98, alloy C65100, designation H04 or alloy C65500, designation H04. Bolts and nuts for buried service shall be made of noncorrosive high-strength, low-alloy steel having the characteristics specified in AWWA C111/A21, regardless of any other protective coating. Where washers are required, they shall be of the same material as the associated bolts.
3. Gaskets shall be as specified in paragraph 2.03 and AWWA C 606.

D. Equipment Connection Fittings:

1. Equipment connection fittings shall provide both lateral and angular misalignment adjustment between equipment connection flanges and the connection to field piping systems by providing individually adjustable flexible joints at each connection. In addition, equipment connection fittings shall provide full pressure thrust restraint between the field piping connection and equipment connection flanges.
2. Equipment connection fittings shall consist of two flanged coupling adapters, a plain end section of pipe and thrust restraint rods and associated fittings designed to transmit thrust without transmitting shear to the thrust restraint rods and without compromising provisions for accommodating angular and parallel misalignment. Materials and features shall conform to the requirements established in this paragraph. Standard “dismantling joints” incorporate only one flanged coupling adapter and are not acceptable substitutes. Equipment connection fittings shall be Romac ECF Series, or Baker Coupling Company, Los Angeles or approved equal, modified as specified to provide the required features.
3. Equipment connection fittings shall each consist of a single sleeve of plain end piping conforming to the requirements of the specified piping system of sufficient length to span the gap between the connection at the equipment and the connection at the field piping with gasketed flange adapters at each end. Thrust restraint shall be provided by means of all threaded rod spanning between flanges and male rod nuts and female washers that are rounded to provide a

ball-joint type self aligning feature. All threaded restraint rod shall project through flange and mating flange coupling adapter bolt holes or through holes in restraint lug plates that extend above the flanges and are secured to the flanges with a minimum of two flange bolts. Where all threaded rods project through flange bolt holes, ball joint type nut and washer combinations and lock washers shall be provided at each face, each end. Where restraint lug plates are employed, ball joint type nuts and washers shall be provided only on the outside faces of the plates and the nuts shall have a self-locking feature that prevents nut movement due to vibration or other operational or environmental causes. Double nutting with non-locking nuts shall not be an acceptable method of providing the self-locking feature. Thrust rod diameter and material shall be selected to provide sufficient freedom of movement through all bolt holes to allow unrestricted maximum adjustment of equipment connection fittings to accommodate piping misalignment without transmitting any shear to the thrust rods and also to permit full development of thrust restraint at all thrust rod tension take-ups. Design of equipment connection fittings shall conform to AWWA C219.

4. Thrust rods, restraint lug plates, nuts, washers and lock washers shall be Type 316 stainless steel, all selected to develop full rated piping system pressure thrust forces. Equipment connection fittings for pump applications shall have thrust rod number and diameter selected such that thrust rod stretch under piping system operating pressure does not exceed 2 mils. Calculations shall be submitted. Dry film molybdenum di-sulfide anti-galling compound shall be factory applied to ends of thrust rods, covering all threads subject to nut travel and tightening. Gaskets shall be as specified in paragraph 2.03. Flange gaskets shall be full face type. Follower gaskets shall be compression wedge type.
5. Sleeves shall be carbon steel or as specified for the specific piping system. Pressure rating of flange adapters shall equal or exceed the pressure rating of mating flanges. All metal portions of equipment connection fittings, with the exception of 316 stainless steel components, shall be coated and lined with fusion bonded epoxy conforming to AWWA C550 and NSF 61.

E. Dismantling Joints:

1. Dismantling joints may be used as takedown couplings in accordance with paragraph 3.03. Dismantling joints shall fully restrained double flange fittings consisting of a flange coupling adapter and flanged spool piece that allows for longitudinal adjustment. Thrust restraint shall be provided by means of all threaded rod spanning between flanges and secured to the flanges with a minimum of two flange bolts. Design of equipment connection fittings shall conform to AWWA C219. Sleeves shall be carbon steel or as specified for the specific piping system. Pressure rating of flange adapters shall equal or exceed the pressure rating of mating flanges. All metal portions of equipment connection fittings, with the exception of 316 stainless steel components, shall be coated and lined with fusion bonded epoxy conforming to AWWA C550 and NSF 61. Dismantling joints shall be Romac DJ-400, Smith Blair 975, or Crane-Viking Johnson Dismantling Joint.

F. Sleeve Band Couplings:

1. Sleeve band couplings shall be Victaulic Style 232. Unless otherwise noted, couplings for liquid service shall be Model F x F Type 2 fully restrained,

shouldered high deflection couplings with standard width band. Couplings shall comply with AWWA C-219. Couplings for use with air systems shall be Airmaster restrained Depend-O-Lock couplings in conformance with AWWA C-606. Sleeve band couplings are acceptable wherever sleeve type couplings are used (paragraph 2.02 Sleeve Type Coupling).

G. Flexijoint:

1. Where specified Flexijoint couplings shall be Flanged Romac Flexijoint couplings or approved equal. The Flexijoint is a flexible, ductile iron joint that can accommodate expansion, contraction, rotation and bending and is rated at 350 psi working pressure. The joint can accommodate 15 to 20 degree deflection depending on size. Body shall be ductile iron, lock rings Type 410 stainless steel, and ring gasket, casing, ball and cover shall be EPDM molded watertight construction. All metal portions of Flexijoint coupling including the stainless steel lock rings shall be coated and lined with fusion bonded epoxy conforming to AWWA C550 and NSF 61. For buried installations, install with polyethylene baggy cover in accordance with the manufacturer's instructions.

2.03 GASKETS

A. Gaskets designated in Section 40 05 01 shall be as follows:

1. EPDM: ethylene-propylene-diene-terpolymer.
2. Neoprene: neoprene.
3. Nitrile: nitrile (Buna N).
4. Compressed gasketing consisting of organic fibers (Kevlar) and neoprene binder; ASTM F104 (F712400), 2500 psi (ASTM F152), 0.2 ML/HR LEAKAGE FUEL A (ASTM F37).
5. Compressed gasketing consisting of organic fibers (Kevlar) and SBR binder; ASTM F104 (F712400), 2500 PSI (ASTM F152), 0.1 ml/hr leakage Fuel A (ASTM F37).
6. Gylon gasketing, Garlock Style 3500, 2000 psi (ASTM F152), 0.22 ml/hr Fuel A (ASTM F37).
7. Gylon gasketing, Garlock Style 3510, 2000 psi (ASTM F152), 0.04 ml/hr Fuel A (ASTM F37).
8. Gylon gasketing, Garlock Style 3504, 2000 psi (ASTM F152), 0.12 ml/hr Fuel A (ASTM F37).
9. TFE: noncreeping tetrafluoroethylene (TFE) with insert filler.
10. PTFE bonded EPDM: PTFE bonded to EPDM in full-face gasket having concentric-convex molded rings; Garlock Stress Saver 370 or approved equal.
11. Viton/FKM – Fluoroelastomer, 75 Durometer

2.04 THREAD

A. Pipe thread dimensions and size limits shall conform to ASME BI.20.1.

2.05 DIELECTRIC UNIONS

A. Dielectric unions shall be EPCO, Capitol Manufacturing, or approved equal.

2.06 INSULATING JOINTS

A. Insulating joints shall be provided at dissimilar metal connections. Insulating joints shall consist of gaskets, sleeves and isolation washers and shall be as manufactured by PSI LineBacker manufactured by GPT Industries or approved equal.

2.07 COATINGS

A. Unless otherwise specified, flange assemblies and mechanical type couplings for buried installation shall be field coated with System M-1 as specified in Section 09 90 00.

2.08 PRODUCT DATA

A. In accordance with Section 01 33 00, the Contractor shall provide for each welder, a welder qualification certificate indicating the welder is certified for pipe welding in accordance with ASME Boiler and Pressure Vessel, Section IX. Each welder's certificate shall be provided to the Engineer prior to that welder working on the job.

PART 3 EXECUTION

3.01 PIPE CUTTING, THREADING AND JOINTING

A. Pipe cutting, threading and jointing shall conform to the requirements of ASME B31.1.

3.02 PIPE WELDING

A. Pipe shall be welded by ASME-certified welders using shielded metal arc, gas shielded arc or submerged arc welding methods. Welds shall be made in accordance with the requirements of ASME B31.1 for piping Systems 8, 26, and 28 specified in Section 40 05 01. Welds shall be made in accordance with the requirements of ASME B31.3 for piping System 20 specified in Section 40 05 01.

B. Welds for piping systems not specified above shall be made in accordance with AWWA C206.

3.03 TAKEDOWN COUPLINGS

A. Takedown couplings shall be screw unions, flanged or grooved end mechanical coupling type joints and shall be provided as specified. Flanged or grooved end joints shall be employed on pipelines 2-1/2 inches in diameter and larger. Where piping passes through walls, takedown couplings shall be provided within 3 feet of the wall, unless specified otherwise.

B. A union or flanged connection shall be provided within 2 feet of each threaded end valve.

3.04 FLEXIBILITY

A. Unless otherwise specified, piping passing from concrete to earth shall be provided with two pipe couplings or flexible joints (or a single Flexijoint) as specified on the buried pipe within 2 feet of the structure for 2-inch through 6-inch diameter pipe; within 3 feet of the structure for 8-inch through 24-inch diameter pipe; and within one and one-half pipe diameters of the structure for larger pipe. Where required for resistance to pressure, mechanical couplings shall be restrained in accordance with Chapter 13 of AWWA M11, including Tables 13-4, 13-5 and 13-5A, and Figure 13-20.

3.05 DIELECTRIC CONNECTIONS

A. Where a copper pipe is connected to steel or cast iron pipe, an insulating section of rubber or plastic pipe shall be provided. The insulating section shall have a minimum length of 12 pipe diameters. Dielectric unions as specified in paragraph 2.05 may be used instead of the specified insulating sections. Where copper pipe is supported from hangers, it shall be insulated from the hangers, or copper-plated hangers shall be used.

3.06 EQUIPMENT CONNECTION FITTINGS

A. Where shown, equipment connection fittings shall be provided between field piping systems and equipment inlet and outlet connections.

END OF SECTION

SECTION 40 05 06.23
EXPANSION JOINTS AND FLEXIBLE METAL HOSES

PART 1 GENERAL

1.01 DESCRIPTION

A. This section specifies piping expansion joints and flexible metal hose.

1.02 QUALITY ASSURANCE

A. References:
1. This section contains references to the following documents. They are a part of this section as specified and modified. Where a referenced document contains references to other standards, those documents are included as references under this section as if referenced directly. In the event of conflict between the requirements of this section and those of the listed documents, the requirements of this section shall prevail.
2. Unless otherwise specified, references to documents shall mean the documents in effect at the time of Advertisement for Bids or Invitation to Bid (or on the effective date of the Agreement if there were no Bids). If referenced documents have been discontinued by the issuing organization, references to those documents shall mean the replacement documents issued or otherwise identified by that organization or, if there are no replacement documents, the last version of the document before it was discontinued. Where document dates are given in the following listing, references to those documents shall mean the specific document version associated with that date, regardless of whether the document has been superseded by a version with a later date, discontinued or replaced.

Reference	Title
ASTM A276-90	Stainless and Heat-Resisting Steel Bars and Shapes
EJMA STDS-80	Standards of Expansion Joint Manufacturers' Association, Edition No. 5

B. Performance and Service Conditions:
1. Expansion joints shall be designed in accordance with EJMA Standards for pressure, temperature and service as specified.
2. Flexible metal hose shall be suitable for a line pressure equal to the test pressure listed in the PIPESPEC.

C. Design Requirements:
1. Flexible Metal Hose: Live lengths for flexible metal hose shall be based upon the service conditions listed under paragraphs 1.02 References and 1.02 Performance and Service Conditions and a design life of 1,000,000 full displacement cycles.

2. Expansion Joints: Corrugated type expansion joints shall be suitable for a minimum of 10,000 pressure, temperature and deflection cycles (non-concurrent).

1.03 SUBMITTALS

A. The following submittals shall be provided in accordance with Section 01 33 00:
   1. A copy of this specification section, with addendum updates included, and all referenced and applicable sections, with addendum updates included, with each paragraph check-marked to indicate specification compliance or marked to indicate requested deviations from specification requirements. A check mark (□) shall denote full compliance with a paragraph as a whole. If deviations from the specifications are indicated, and therefore requested by the Contractor, each deviation shall be underlined and denoted by a number in the margin to the right of the identified paragraph, referenced to a detailed written explanation of the reasons for requesting the deviation. The Engineer shall be the final authority for determining acceptability of requested deviations. The remaining portions of the paragraph not underlined will signify compliance on the part of the Contractor with the specifications. Failure to include a copy of the marked-up specification sections, along with justification(s) for any requested deviations to the specification requirements, with the submittal shall be sufficient cause for rejection of the entire submittal with no further consideration.
   2. Design and construction details of formed metal bellows type expansion joints.
   3. Pressure thrust force and spring rate data for formed metal bellows expansion joints.
   4. Materials, design and construction, and temperature and pressure rating for elastomer and fabric expansion joints.
   5. Details for installation of all expansion joints.
   6. Listing of all flexible metal hose applications.

PART 2 PRODUCTS

2.01 EXPANSION JOINTS

A. Metal Construction:
   1. Formed Bellows Type:
      a. Medium Temperature: Used on the aeration piping, formed bellows type expansion joints for temperatures up to 300 degrees F shall have 300 series stainless steel multi-ply bellows rated for the specified design temperature and pressure. Test pressures are specified in Section 40 05 01. Each expansion joint shall be factory tested at the test pressure. Ductwork expansion joints may be rated at less than 50 psig but must be rated equal to the design pressure and, in no case, less than 2 psig.
         1) Expansion joint design shall be determined by the amount and kind of movement specified (axial, lateral, angular). Unless otherwise specified, end connections shall be flanged. Formed bellows type expansion joints shall be as manufactured by Flexonics, Inc., Hyspan Precision Products, Inc., American BOA Inc. or approved equal.

2) The expansion joints shall meet the following requirements.
   Axial compression: 1-inch
   Axial Extension: 0.8-inch
   Lateral Deflection: 1.0-inch
3) Angular deflection: 3 degrees
4) Torsional deflection: 3 degrees

2. Steel Expansion Compensator Type: Steel expansion compensator type expansion joints shall be Flexonics Model H Expansion Compensator, Hyspan Series 8500, Keflex 7Q, or approved equal. Compensators shall have 2-ply stainless steel bellows and carbon steel shroud and end fittings. Compensators shall be rated for 175 psi maximum working pressure and 750 degrees F.
3. Bronze Expansion Compensator Type: Bronze expansion compensator type expansion joints shall be Flexonic Model HB Expansion Compensator, Hyspan Series 8500, Keflex 7Q, American BOA Inc., or approved equal. Compensators shall have multi-ply phosphor bronze or stainless steel bellows and copper tube end fittings. Compensators shall be rated for 150 psi maximum working pressure and 400 degrees F temperature rating.

B. Elastomer and Fabric Construction:
1. General: Elastomer and fabric expansion joints shall be the standard spool arch type or the precision molded spherical design type as indicated or specified. Expansion joint connectors shall have control units (restraints) to prevent excessive axial elongation and to accept the static pressure thrust in the piping system. Number and sizes of control rods or restraints shall be as determined by the manufacturer. Unless otherwise specified, single arch and sphere type expansion joints shall have 6-inch face-to-face dimension for pipe up to 8 inches and 8-inch face-to-face dimension for pipe 10 and 12 inches.
   a. The cover elastomer shall be chlorobutyl, neoprene or EPDM. For temperatures between 180 and 240 degrees F, the tube elastomer shall be chlorobutyl or EPDM respectively. Neoprene or Buna N liners are acceptable for temperatures to 180 degrees F.
2. Spool Type: Spool type expansion joints shall be of the resilient arch type and shall be standard or tapered as specified. Unless otherwise specified, all tapered connectors shall be eccentric.
   a. Spool type expansion joints shall be constructed of multiple plies of woven fabric impregnated with elastomer and reinforced with steel rings or wire embedded in the body. Standard arch type expansion joints suitable for the specified temperature and pressure shall be provided with retaining rings or backup rings. Retaining rings shall be 3/8-inch thick steel, split, either galvanized or zinc shield coated. Expansion joints, single, multiple, or filled arch, shall be Mason Style EJBN, Garlock Style 204, Mercer Style 500, Goodall Style E-1462, General Style 1025, or approved equal. Filled arch type shall be used on all piping systems carrying fluids containing solids. High pressure couplings suitable for 240 degree F operating temperatures shall be Mason Style EJBN-HD, Mercer Style 510, Garlock Style 204-HP, Goodall Style E-1489, General Style 1015, or approved equal.

b. Unless specified otherwise, spool type expansion joints shall meet the following requirements:
   1) Axial compression: 1.5-inch
   2) Axial Extension: 0.8-inch
   3) Lateral Deflection: 1.0-inch
   4) Angular deflection: 8 degrees
   5) Torsional deflection: 3 degrees

C. Polyvinylchloride Construction: Polyvinylchloride expansion joints shall be Celanese "Chemtrol" CPVC slip type with Teflon impregnated seal rings, Certain-teed Fluid Tite PVC, Johns-Manville PVC double bell expansion joint, or approved equal.

D. Teflon Construction: Teflon expansion joints shall be molded TFE bellows and shall be Metraflex T-2, Garlock Style 215, Resistoflex R-6905, EGC Style M-150, or approved equal.

2.02 FLEXIBLE METAL HOSE – NOT USED

2.03 PRODUCT DATA

A. The following information shall be provided to the Engineer in accordance with Section 01 33 00:
   1. Design and construction details of formed metal bellows type expansion joints, including maximum expansion/contraction.
   2. Pressure thrust force and spring rate data for formed metal bellows expansion joints.
   3. Details for installation of all expansion joints.

PART 3 EXECUTION

3.01 INSTALLATION

A. Expansion joints and anchors shall be located as specified. Location and number of guides shall be determined from EJMA Standards.

B. Expansion joints shall not be installed during times of temperature extreme or in a fully compressed or fully expanded condition.

3.02 ALIGNMENT

A. Piping systems shall be aligned prior to installation of expansion joints. Expansion joints shall not be used to correct piping misalignment during installations. Expansion joints normally preset at the factory for rated axial compression and expansion shall be installed in this preset condition.

END OF SECTION

SECTION 40 05 06.33
PIPING APPURTENANCES

PART 1 GENERAL

1.01 DESCRIPTION

A. Scope: This section specifies pipeline thermometers, flow and level gages, pressure gages, strainers, steam traps, vents and drains.

B. Exclusions: Temperature, pressure and flow measuring devices used for instrumentation are specified in Division 40.

PART 2 PRODUCTS

2.01 PIPELINE THERMOMETERS – NOT USED

2.02 FLOW AND LEVEL GAGES

A. Rotameters:
   1. Unless otherwise specified, rotameters for purges and other low capacity services shall be Brooks Sho-Rate "50," Wallace & Tiernan 3-inch purge meter, Schutte & Koerting, or approved equal, with integral needle valve and flow controller. Meter tubes shall be glass, floats shall be stainless steel, and cases shall be aluminum or stainless steel. Unless otherwise specified, meter sizes shall be selected so that the flow rate recommended by the manufacturer of the purged equipment falls within the middle third of the meter scale. Units shall have a 3-inch minimum scale direct reading in the units of flow.
   2. Rotameters for high capacity service shall be glass tube-type with a 5-inch scale and stainless steel frame. Flow range shall be as specified and scales shall indicate the units of flow. Rotameters shall be as manufactured by Brooks, Wallace & Tiernan, Schutte & Koerting, or approved equal.

B. Sight Gages: Sight gages shall be 3/4-inch Penberthy 205 Series, Lunkenheimer Fig. 589, or approved equal, automatic water gage complete with pyrex gage glass and gage glass protector. Overall length of gages, type of mounting, and orientation of set shall be as specified.

C. Flow Indicators: Flow indicators shall be provided where specified. Each indicator shall consist of a bronze body with threaded ends and a sight glass with rotary wheel. Pressure ratings for flow indicators shall match pipe pressure ratings. Indicators shall be as manufactured by Jacoby-Tarbox, Schutte & Koerting, Eugene Ernst Products, or approved equal.

2.03 PRESSURE DEVICES

A. Gage Cocks: Unless otherwise specified, gage cocks shall be Robertshaw 1303, Ashcroft 1095, or approved equal. The exposed threads of each gage cock shall be protected by a brass plug.

B. Pressure Gages:
   1. Unless otherwise specified, pressure gage scales shall be selected so that the normal operating pressure falls between 50 and 80 percent of full scale, shall be 4 1/2-inch, 270-degree movement, 1/2-percent accuracy, full-scale, and suitable for bottom stem mounting. Gages shall have a 316-SS bourdon tube. All gages shall have a 300 series stainless steel case, shatterproof glass, and a 1/2-inch NPT bottom connection.
   2. Pressure gages for air, gas, and low pressure services (0-10 feet) shall be premium grade, heavy-duty bourdon-tube units (bellow type for vacuum) with Delrin bushings and pinion, and stainless steel sector.
   3. Gages on liquid service shall be as noted above, except they shall be provided with an internal pulsation dampening system consisting of either a glycerin fill or a silicone fluid fill. Snubbers or orifices shall not be utilized. Gages shall be Ashcroft Duragauge Fig. 1279, Ametek 1981L, or approved equal.

C. Diaphragm Seals: Unless otherwise specified, seals shall be diaphragm type with 1/4-inch flushing connection, Type 316 stainless steel body and Type 316L diaphragm. Fill fluid shall be Silicone DC200 unless otherwise specified. Seal shall be Mansfield and Green Type SG, Ashcroft Type 101, or approved equal.

D. Pressure Sensors:
   1. Unless otherwise specified, pressure sensors (tubular chemical seals) shall be the in-line full stream captive sensing liquid type. Wetted parts shall be 316 stainless steel. Flexible cylinder shall be Buna-N unless otherwise specified. Seals shall be rated for 200 psi with 5-inch SC hysteresis. Seals shall be Ronningen-Petter, Red Valve, or approved equal.
   2. Fill fluid shall be rated for a temperature range of -20 degrees F to 200 degrees F. Capillary tubing shall be armored stainless steel. Fittings shall be provided for vacuum filling of system. Systems that are not factory filled shall be vacuum filled in the field. Filling connections shall be soldered shut after vacuum evacuation and filling.

2.04 STRAINERS

A. Air Line Strainers: Unless otherwise specified, air line strainers shall be Y-pattern, cast iron body, with 40 mesh Monel screens packed with Everdur wool. Bronze bodies shall be provided with copper piping. Air line strainers shall be fitted with a brass blowoff cock. Strainers shall be Mueller, Armstrong, or approved equal.

B. Water Strainers: Water strainers shall be of Y-pattern, unless otherwise specified. Water strainers shall have cast iron body. Bronze bodies shall be provided with copper piping. Strainers shall have 304 stainless steel screens and tapped and plugged blowoff connections. Screen perforations shall be 0.020 inch for steam service and 0.045 inch for water service. Strainers shall be Mueller, Armstrong, or approved equal.

C. Chemical strainers: Chemical strainers shall be of Y-pattern, unless otherwise specified. Chemical strainers shall have body, strainer, and gasket materials to

match piping service and shall be completely compatible with the specified chemical service. Strainers shall be Hayward, Asahi or approved equal.

2.05 STEAM TRAPS – NOT USED

2.06 PRODUCT DATA

A. Manufacturer's product data shall be provided in accordance with Section 01 33 00.

PART 3 EXECUTION

3.01 PIPELINE THERMOMETERS – NOT USED

3.02 GAGE TAPS

A. Gage taps shall be provided on the suction and discharge of pumps, fans, compressors, vacuum pumps and blowers. Gage taps shall consist of a 1/4-inch gage cock attached by a threaded nipple to the pipeline, duct or equipment.

3.03 VENTS AND DRAINS

A. Manual air vents shall be provided at the high points of each reach of pipeline whether shown on Drawings or not. Air vents shall consist of bronze cock and copper tubing return. Air vents shall be taken to the nearest floor with cock mounted 4 feet above the floor. Vents in piping systems for fluids containing solids shall be 1-inch nonlubricated eccentric plug valves fitted with quick couplers.

B. Drains shall be provided at all low points whether shown on the Drawings or not and shall be piped to a sump, gutter, floor drain or other collection point with a valve mounted 4 feet above the floor. Drain valves shall be threaded end gate valves of the size specified. When drains cannot be run to collection points, they shall be routed to a point of easy access and shall have hose gate valves of the size specified.

END OF SECTION

THIS PAGE INTENTIONALLY LEFT BLANK

SECTION 40 05 07

HANGERS AND SUPPORTS FOR PROCESS PIPING

PART 1 GENERAL

1.01 DESCRIPTION

A. Scope: This section specifies hangers and supports for all piping systems specified in Section 40 05 01. This section does not include pipe anchors, guides or seismic restraints, which are covered in Section 40 05 07.13.

B. Operating Conditions:
   1. The hangers and supports specified in this section are provided to resist pipe loads occurring primarily in the downward (gravity) direction. For the purpose of pipe hanger and support selection, this section establishes pipe support classifications based on the operating temperatures of the piping contents. Pipe support classifications are as follows:
      a. Hot Systems
         1) A - 1. 120 degrees F to 450 degrees F
         2) A - 2. 451 degrees F to 750 degrees F
         3) A - 3. Over 750 degrees F
      b. Ambient Systems
         1) B. 60 degrees F to 119 degrees F
      c. Cold Systems
         1) C - 1. 33 degrees F to 59 degrees F
         2) C - 2. -20 degrees F to 32 degrees F

C. Hanger and Support Selection:
   1. The Contractor shall select pipe hangers and supports as specified in the project manual. Selections shall be based upon the pipe support classifications specified in this section, the piping insulation thickness specified in Section 40 42 00, and any special requirements which may be specified in the project manual.
   2. The Contractor shall review the piping layout in relation to the surrounding structure and adjacent piping and equipment before selecting the type of support to be used at each hanger point.
   3. Hangers and supports shall withstand all static and specified dynamic conditions of loading to which the piping and associated equipment may be subjected. As a minimum, consideration shall be given to the following conditions:
      a. Weights of pipe, valves, fittings, insulating materials, suspended hanger components, and normal fluid contents.
      b. Weight of hydrostatic test fluid or cleaning fluid if normal operating fluid contents are lighter.
      c. Reaction forces due to the operation of safety or relief valves.
      d. Wind, snow or ice loadings on outdoor piping.

4. Hangers and supports shall be sized to fit the outside diameter of pipe, tubing, or, where specified, the outside diameter of insulation.
5. Where negligible movement occurs at hanger locations, rod hangers shall be used for suspended lines, wherever practical. For piping supported from below, bases, brackets or structural cross members shall be used.
6. Hangers for the suspension of size 2 1/2 inches and larger pipe and tubing shall be capable of vertical hanger component adjustment under load.
7. The supporting systems shall provide for and control the free or intended movement of the piping including its movement in relation to that of connected equipment.
8. Where there is horizontal movement at a suspended type hanger location, hanger components shall be selected to allow for swing. The vertical angle of the hanger rod shall not, at any time, exceed 4 degrees.
9. There shall be no contact between a pipe and hanger or support component of dissimilar metals. Prevent contact between dissimilar metals when supporting copper tubing by use of copper-plated, rubber, plastic or vinyl coated, or stainless steel hanger and support components.
10. Unless otherwise specified, existing pipes and supports shall not be used to support new piping.
11. Unless otherwise specified, pipe support components shall not be attached to pressure vessels.
12. Stock hanger and support components shall be used wherever practical.

1.02 REFERENCES

A. This section contains references to the following documents. They are a part of this section as specified and modified. Where a referenced document contains references to other standards, those documents are included as references under this section as if referenced directly. In the event of conflict between the requirements of this section and those of the listed documents, the requirements of this section shall prevail.

B. Unless otherwise specified, references to documents shall mean the documents in effect at the time of Advertisement for Bids or Invitation to Bid (or on the effective date of the Agreement if there were no Bids). If referenced documents have been discontinued by the issuing organization, references to those documents shall mean the replacement documents issued or otherwise identified by that organization or, if there are no replacement documents, the last version of the document before it was discontinued. Where document dates are given in the following listing, references to those documents shall mean the specific document version associated with that date, regardless of whether the document has been superseded by a version with a later date, discontinued or replaced.

Reference	Title
AISC Manual of Steel Construction	American Institute of Steel Construction, Manual of Steel Construction, Allowable Stress Design - 9th Ed.
FEDSPEC WW-H-171e-78	Hangers and Supports, Pipe

Reference	Title
MFMA-2-91	Metal Framing Standards Publication
MSS SP-69-91	Pipe Hangers and Supports - Selection and Application
MSS SP-58-93	Pipe Hangers and Supports - Materials, Design and Manufacture

PART 2 PRODUCTS

2.01 ACCEPTABLE PRODUCTS

A. Standard pipe supports and components shall be manufactured by B-Line, Carpenter & Patterson, Kin-Line, Grinnell, Michigan, Pipe Shields Incorporated, Superstrut, Unistrut, or approved equal. Pipe support components shall conform to the requirements of MSS SP-69 and FEDSPEC WW-H-171e. Pipe support materials shall conform to the requirements of MSS SP-58. Metal framing system components shall conform to the metal framing manufacturers' Association Standard MFMA-2.

2.02 MATERIALS

A. General: Unless otherwise specified, all structural/weld fabricated pipe hangers and supports, structural attachments, fittings and accessories shall be hot-dip galvanized after fabrication. Nuts, bolts and washers may be zinc-plated except for those subject to moisture or corrosive atmosphere shall be type 316 stainless steel.

B. Pipe Hangers and Supports:
   1. Type 1 - Clevis Pipe Hanger: Clevis hangers shall be carbon steel with configuration and components equivalent to MSS and FEDSPEC Type 1.
      a. Steel pipe (insulated) - shall be B-Line B3100, Grinnell Fig. 260, or approved equal, with insulation shield.
      b. Steel pipe (uninsulated) - shall be B-Line B3100, Grinnell Fig. 260, or approved equal.
      c. Cast and ductile iron pipe - shall be B-Line B3102, Grinnell Fig. 590, or approved equal.
      d. Copper pipe (uninsulated) - shall be B-Line B3104 CT, Grinnell Fig. CT-65, or approved equal.
      e. Copper pipe (insulated) - shall be B-Line B3100, Grinnell Fig. 260, or approved equal, with insulation shield.
      f. Plastic pipe - shall be B-Line B3100 C, Carpenter & Patterson Fig. 100PVC, or approved equal.
   2. Type 2 - "J" Pipe Hanger: Hangers shall be carbon steel with configuration and components equivalent to MSS Type 5.
      a. Steel pipe - shall be B-Line B3690, Grinnell Fig. 67, Michigan model 418, or approved equal.
      b. Copper and plastic pipe - shall be Michigan model 419, Unistrut J 1205N series, or approved equal.

3. Type 3 - Double Bolt Pipe Clamp: Pipe clamp shall be carbon steel, with configuration and components equivalent to MSS and FEDSPEC Type 3.
   a. Steel pipe (insulated) - shall be B-Line B3144, Grinnell Fig. 295, or approved equal, with insulation shield. Insulation shield is optional for hot and ambient systems.
   b. Steel pipe (uninsulated) - shall be B-Line B3144, Grinnell Fig. 295, or approved equal.
   c. Copper pipe (insulated only) - shall be B-Line B3144, Grinnell Fig. 295, or approved equal, with insulation shield.
4. Type 4 - Adjustable Roller Hanger: Rollers shall be cast iron, yoke and cross bolt shall be carbon steel. Configuration and components shall be equivalent to MSS Type 43 and FEDSPEC Type 44.
   a. Steel pipe (insulated) - shall be B-Line B3110, Grinnell Fig. 181, or approved equal, with insulation shield.
   b. Steel pipe (uninsulated) - shall be B-Line B3110, Grinnell Fig. 181, or approved equal.
   c. Copper pipe (insulated only) - shall be B-Line B3110, Grinnell Fig. 181, or approved equal, with insulation shield.
   d. Plastic pipe - shall be B-Line B3110, Grinnell Fig. 181, or approved equal.
5. Type 5 - Single Pipe Roll: Rollers and sockets shall be cast iron, cross rod shall be steel. Configuration and components shall be equivalent to MSS Type 41 and FEDSPEC Type 42.
   a. Steel pipe (insulated) - shall be B-Line B3114, Grinnell Fig. 171, or approved equal, with insulation shield.
   b. Steel pipe (uninsulated) - shall be B-Line B3114, Grinnell Fig. 171, or approved equal.
   c. Plastic pipe - shall be B-Line B3114, Grinnell Fig. 171, or approved equal.
6. Type 6 - Framing Channel Pipe Clamp: Pipe clamps shall be steel with galvanized finish and material thickness as listed below:
   a. Steel pipe (uninsulated) - Pipe size 3/8 inch and 1/2 inch shall be 16 gage; 3/4 inch through 1 1/4 inches shall be 14 gage; 1 1/2 inches through 3 inches shall be 12 gage; 3 1/2 inches through 5 inches shall be 11 gage; 6 and 8 inches shall be 10 gage; Michigan model 431, Powerstrut PS 1100, Unistrut P 1109 series, or approved equal.
   b. Steel pipe (insulated) - Pipe clamp shall be as described in paragraph 2.02 Steel Pipe (Uninsulated) with insulation shield.
   c. Copper (uninsulated) and plastic pipe - Pipe size 3/8 inch and 1 inch shall be 16 gage; 1-1/4 inches and 1-1/2 inches shall be 14 gage; 2 inches through 3 inches shall be 12 gage; 4 inches shall be 11 gage; clamp shall be copper-plated, plastic coated or lined with dielectric material; Michigan model 432, Powerstrut PS 1200, Unistrut P 2024C and P 2024PC series, or approved equal.
   d. Copper pipe (insulated) - Pipe clamp shall be as described in paragraph 2.02 Steel Pipe (Uninsulated) with insulation shield.

7. Type 7 - U-BOLT: U-bolts shall be carbon steel with configuration equivalent to MSS and FEDSPEC Type 24.
   a. Steel pipe (uninsulated) - shall be Grinnell Fig. 137, B-Line B3188, or approved equal.
   b. Steel pipe (insulated) - shall be Grinnell Fig. 137, B-Line B3188, or approved equal, with insulation shield.
   c. Cast and ductile iron pipe - shall be Grinnell Fig. 137, B-Line B3188, or approved equal.
   d. Copper pipe (uninsulated) - shall be Carpenter & Patterson Fig. 222 CT, B-Line B3501 CT, Grinnell Fig. 137C, or approved equal.
   e. Copper pipe (insulated) - shall be Grinnell Fig. 137, B-Line B3188, or approved equal, with insulation shield.
   f. Plastic pipe - shall be Grinnell Fig. 137C, Michigan model 151, B-Line B3188 C, or approved equal.
8. Type 8 - Adjustable Pipe Roll Support: Rollers and sockets shall be cast iron, cross rod and support rods shall be carbon steel.
   a. Steel pipe (insulated) - shall be B-Line B3122, Grinnell Fig. 177, or approved equal, with insulation shield.
   b. Steel pipe (uninsulated) - shall be B-Line B3122, Grinnell Fig. 177, or approved equal.
   c. Copper pipe (insulated only) - shall be B-Line B3122, Grinnell Fig. 177, or approved equal, with insulation shield.
   d. Plastic pipe - shall be B-Line B3122, Grinnell Fig. 177, or approved equal.
9. Type 9 - Welded Pipe Stanchion: Minimum material thickness shall be standard schedule carbon steel pipe, cut to match contour of the pipe elbow. Use of this support shall be limited to ambient systems only.
10. Type 10 - Pipe Stanchion Saddle: Saddles and yokes shall be carbon steel and comply with MSS Type 37 and FEDSPEC Type 38.
    a. Steel pipe (insulated) - shall be Carpenter & Patterson Fig. 125, B-Line B3090, or approved equal, with insulation shield.
    b. Steel pipe (uninsulated) - shall be Carpenter & Patterson Fig. 125, B-Line B3090, or approved equal.
    c. Cast and ductile iron pipe - shall be Carpenter & Patterson Fig. 125, B-Line B3090 NS, or approved equal.
    d. Copper pipe (uninsulated) - shall be Carpenter & Patterson Fig. 125, B-Line B3090, or approved equal, with insulation shield or lined with dielectric material.
    e. Copper pipe (insulated) - shall be Carpenter & Patterson Fig. 125, B-Line B3090, or approved equal, with insulation shield.
    f. Plastic pipe - shall be Carpenter & Patterson Fig. 125, B-Line B3090, or approved equal.
11. Type 11 - Offset Pipe Clamp: Pipe clamp shall be carbon steel with configuration and components as specified and shall be of standard design manufactured by a pipe hanger component manufacturer.

a. Steel pipe (insulated) - shall be B-Line B3148, Grinnell Fig. 103, or approved equal, with insulation shield.
b. Steel pipe (uninsulated) - shall be B-Line B3148, Grinnell Fig. 103, or approved equal.
c. Cast and ductile iron pipe - shall be B-Line B3148 NS, Grinnell Fig. 103, or approved equal.
d. Copper pipe (insulated) - shall be B-Line B3148, Grinnell Fig. 103, or approved equal, with insulation shield.
e. Copper pipe (uninsulated) - shall be B-Line B3148, Grinnell Fig. 103, or approved equal, lined with dielectric material.
f. Plastic pipe - shall be B-Line B3148, Grinnell Fig. 103, or approved equal.
g. Vertical pipe support applications shall be as specified above except that insulation shields shall not be used for insulated pipe.

12. Type 12 - Riser Clamp: Riser clamp shall be carbon steel with configuration and components equivalent to MSS and FEDSPEC Type 8.
    a. Steel pipe (insulated) - shall be B-Line B3373, Grinnell Fig. 261, or approved equal.
    b. Steel pipe (uninsulated) - shall be B-Line B3373, Grinnell Fig. 261, or approved equal.
    c. Cast and ductile iron pipe - shall be B-Line B3373, Grinnell Fig. 261, or approved equal.
    d. Copper pipe (insulated) - shall be B-Line B3373 CT, Grinnell Fig. CT-121, Michigan model 511, or approved equal.
    e. Copper pipe (uninsulated) - shall be B-Line B3373 CT, Grinnell Fig. CT-121, Michigan model 511, or approved equal.
    f. Plastic pipe - shall be B-Line B3373, Grinnell Fig. 261c, or approved equal.
13. Type 13 - Framing Channel Pipe Strap: Pipe strap shall be carbon steel, with configuration equivalent to MSS Type 26.
    a. Steel pipe (uninsulated) - shall be Superstrut No. C-708-U, Powerstrut PS 3126, Kin-Line No. 477, or approved equal.
    b. Steel pipe (insulated) - shall be Superstrut No. C-708-U, Powerstrut PS 3126, Kin-Line No. 477, or approved equal, with insulation shield.
    c. Copper pipe (uninsulated) - shall be Superstrut No. C-708-U, Powerstrut PS 3126, Kin-Line No. 477, or approved equal, with insulation shield or lined with dielectric material.
    d. Copper pipe (insulated) - shall be Superstrut No. C-708-U, Powerstrut PS 3126, Kin-Line No. 477, or approved equal, with insulation shield.
    e. Plastic pipe - shall be Superstrut No. C-708-U, Powerstrut PS 3126, Kin-Line No. 477, or approved equal.

C. Rack and Trapeze Supports:
1. General: Unless otherwise specified, trapeze and pipe rack components shall have a minimum steel thickness of 12 gage, with a maximum deflection 1/240 of the span.

2. Type 20 - Trapeze Pipe Support: Trapeze pipe support cross members shall be framing channel as specified in paragraph 2.02 Framing Channel. Flat plate fittings shall be 1 5/8-inch square carbon steel of standard design manufactured by framing channel manufacturer, Unistrut P2471, B-Line B202-2, or approved equal.
3. Type 21 - Pipe Rack Support: Post and cross members shall be framing channel as specified in paragraph 2.02 Framing Channel. Pipe rack fittings shall be carbon steel, of standard design manufactured by framing channel manufacturer. 90-degree fittings shall be gusseted Unistrut P2484, B-Line B844, or approved equal. Post base fittings shall be as specified in paragraph 2.02 Type E – Framing Channel Post Base.

D. Structural Attachments:
1. Type A - Malleable Iron Concrete Insert: Concrete inserts shall be malleable iron and comply with MSS and FEDSPEC Type 18. Grinnell Fig. 282, Carpenter & Patterson Fig. 108, or approved equal.
2. Type B - Side Beam Bracket: Bracket shall be malleable iron and comply with MSS Type 34 and FEDSPEC Type 35. Grinnell Fig. 202, B-Line B3062, or approved equal.
3. Type C - Malleable Beam Clamp With Extension Piece: Clamp and extension piece shall be malleable iron, tie rod shall be steel. Beam clamp shall comply with MSS and FEDSPEC Type 30. Grinnell Fig. 218 with Fig. 157 extension piece, B-Line B3054, or approved equal.
4. Type D - Steel Beam Clamp With Eye Nut: Beam clamp and eye nut shall be forged steel. Configuration and components shall comply with MSS and FEDSPEC Type 28. Grinnell Fig. 292, Carpenter & Patterson Fig. 297, or approved equal.
5. Type E - Framing Channel Post Base: Post bases shall be carbon steel, of standard design manufactured by framing channel manufacturer. Single channel: Unistrut P2072A, B-Line B280, or approved equal. Double channel: Unistrut P2073A, B-Line B281, or approved equal.
6. Type F - Welded Beam Attachment: Beam attachment shall be carbon steel and comply with MSS and FEDSPEC Type 22. B-Line B3083, Grinnell Fig. 66, or approved equal.
7. Type G - Welded Steel Bracket: Bracket shall be carbon steel and comply with MSS Type 32 and FEDSPEC Type 33 for medium welded bracket. Heavy welded bracket shall comply with MSS Type 33 and FEDSPEC Type 34.
8. Type H - Cast Iron Bracket: Bracket shall be cast iron, Carpenter & Patterson Fig. 340, or approved equal.
9. Type J - Adjustable Beam Attachment: Beam attachment shall be carbon steel, Carpenter & Patterson Fig. 151, B-Line B3082, or approved equal.
10. Type K - Double Channel Bracket: Wall channel shall be single channel framing channel as specified in paragraph 2.02 Framing Channel. Cantilever bracket shall be a carbon steel double framing channel assembly, Unistrut P2542 through P2546, B-Line B297-12 through B297-36, or approved equal.
11. Type L - Single Channel Bracket: Wall channel shall be single channel framing channel as specified in paragraph 2.02 Framing Channel. Cantilever bracket

shall be a carbon steel single framing channel assembly, Unistrut P2231 through P2234, B-Line B198-6, B198-12, B196-18 and B196-24, or approved equal.

12. Type M - Wall Mounted Channel: Wall channel shall be single channel framing channel as specified in paragraph 2.02 Framing Channel.
13. Type N - Pipe Stanchion Floor Attachment: Baseplate shall be carbon steel with 1/2 inch minimum thickness. Anchor bolt holes shall be 1/16 inch larger than the anchor bolt diameter. The space between the baseplate and the floor shall be filled with nonshrink grout.

E. Accessories:
1. Hanger Rods: Rods shall be carbon steel, threaded on both ends or continuous threaded and sized as specified.
2. Weldless Eye Nut: Eye nut shall be forged steel and shall comply with MSS and FEDSPEC Type 17. Eye nut shall be Grinnell Fig. 290, B-Line B3200, or approved equal.
3. Welded Eye Rod: Eye rod shall be carbon steel with eye welded closed. Inside diameter of eye shall accommodate a bolt diameter 1/8 inch larger than the rod diameter. Eye rod shall be Grinnell Fig. 278, B-Line B3211, or approved equal.
4. Turnbuckle: Turnbuckle shall be forged steel and shall comply with MSS and FEDSPEC Type 13. Turnbuckle shall be Grinnell Fig. 230, B-Line B3202, or approved equal.
5. Framing Channel: Framing channel shall be 1 5/8 inches square, roll formed, 12-gage carbon steel. Channel shall have a continuous slot along one side with in-turned clamping ridges. Single channel: Unistrut P1000, B-Line B22, or approved equal. Double channel: Unistrut P1001, B-Line B22A, or approved equal. Triple channel: Unistrut P1004A, B-Line B22X, or approved equal.

2.03 THERMAL PIPE HANGER SHIELD

A. Thermal shields shall be provided at hanger, support and guide locations on pipe requiring insulation. The shield shall consist of an insulation layer encircling the entire circumference of the pipe and a steel jacket encircling the insulation layer. The thermal shield shall be the same thickness as the piping system insulation specified in Section 40 42 00. The standard shield shall be used for hot systems and the vapor barrier shield shall be used for cold systems. Stainless steel band clamps shall be used where specified to ensure against slippage between the pipe wall and the thermal shield.

B. Standard Shield:
1. Insulation:
   a. Hydrous calcium silicate, high density, waterproof
   b. Compressive strength: 100 psi average
   c. Flexural strength: 75 psi average
   d. K factor: 0.38 at 100 degrees F mean
   e. Temperature range: 20 degrees F to 500 degrees F

2. Steel Jacket: Galvanized steel. Gage shall be the manufacturer's standard supplied for the given pipe size.
3. Connection: Shield shall have butt connection to pipe insulation. Steel jacket and insulation shall be flush with end.

C. Vapor Barrier Shield:
1. Insulation:
   a. Hydrous calcium silicate, high density, waterproof
   b. Compressive strength: 100 psi average
   c. Flexural strength: 75 psi average
   d. K factor: 0.38 at 100 degrees F mean
   e. Temperature range: 20 degrees F to 500 degrees F
2. Steel Jacket: Galvanized steel. Gage shall be the manufacturer's standard supplied for the given pipe size.
3. Connection: Shield shall have butt connection to pipe insulation. Insulation shall extend 1 inch each side of steel jacket for vaportight connection to pipe insulation vapor barrier.

2.04 PRODUCT DATA

A. Hanger and support locations and components shall be indicated on the piping layout drawings required by Section 40 05 01.

PART 3 EXECUTION

3.01 HANGER AND SUPPORT LOCATIONS

A. The Contractor shall locate hangers and supports as near as possible to concentrated loads such as valves, flanges, etc. Locate hangers, supports and accessories within the maximum span lengths specified in the project manual to support continuous pipeline runs unaffected by concentrated loads.

B. At least one hanger or support shall be located within 2 feet from a pipe change in direction.

C. The Contractor shall locate hangers and supports to ensure that connections to equipment, tanks, etc., are substantially free from loads transmitted by the piping.

D. Where piping is connected to equipment, a valve, piping assembly, etc., that will require removal for maintenance, the piping shall be supported in such a manner that temporary supports shall not be necessary for this procedure.

E. Pipe shall not have pockets formed in the span due to sagging of the pipe between supports caused by the weight of the pipe, medium in the pipe, insulation, valves and fittings.

3.02 INSTALLATION

A. Welded and bolted attachments to the building structural steel shall be in accordance with the requirements of the AISC Manual of Steel Construction. Unless otherwise specified, there shall be no drilling or burning of holes in the building structural steel.

B. Hanger components shall not be used for purposes other than for which they were designed. They shall not be used for rigging and erection purposes.

C. The Contractor shall install items to be embedded before concrete is poured. Fasten embedded items securely to prevent movement when concrete is poured.

D. Embedded anchor bolts shall be used instead of concrete inserts for support installations in areas below water surface or normally subject to submerging.

E. The Contractor shall install thermal pipe hanger shields on insulated piping at required locations during hanger and support installation. Butt joint connections to pipe insulation shall be made at the time of insulation installation in accordance with the manufacturer's recommendations.

F. Hanger and support components in contact with plastic pipe shall be free of burrs and sharp edges.

G. Rollers shall roll freely without binding.

H. Finished floor beneath Type N structural attachments and framing channel post bases shall be roughed prior to grouting. Grout between base plate and floor shall be free of voids and foreign material.

I. Baseplates shall be cut and drilled to specified dimensions prior to welding stanchions or other attachments and prior to setting anchor bolts.

J. Plastic or rubber end caps shall be provided at the exposed ends of all framing channels that are located up to 7 feet above the floor.

3.03 ADJUSTMENTS

A. The Contractor shall adjust hangers and supports to obtain required pipe slope and elevation. Shims made of material that is compatible with the piping material may be used. Stanchions shall be adjusted prior to grouting their baseplates.

END OF SECTION

SECTION 40 05 07.13
SEISMIC RESTRAINTS FOR PIPING

PART 1 GENERAL

1.01 DESCRIPTION

A. Scope: This section specifies seismic restraints for bracing all piping systems specified in Section 40 05 01.

B. Definitions:
   1. Longitudinal direction--direction parallel to the pipe axis.
   2. Lateral direction--direction perpendicular to the pipe axis.

C. Operating Conditions:
   1. The seismic restraints specified in this section are provided to resist pipe movements and loads occurring as a result of an earthquake or other seismic event.
   2. Unless otherwise specified, all piping shall have bracing to resist seismic loading caused by forces applied at the individual pipe's center of gravity. Seismic loading shall be as specified in Section 01 88 15.

D. Restraint Selection:
   1. Unless otherwise specified, the Contractor shall select, locate and provide seismic restraints for piping in accordance with the project manual.
   2. The Contractor shall review the piping layout in relation to the surrounding structure and adjacent piping and equipment before selecting the restraint to be used at each point.
   3. Seismic restraints may be omitted from the following installations:
      a. Gas piping less than 1-inch inside diameter.
      b. Piping in boiler and mechanical rooms less than 1 1/4-inch inside diameter.
      c. All other piping less than 2 1/2-inch inside diameter.
      d. All piping suspended by individual hangers 12 inches or less in length from the top of the pipe to the bottom of the support for the hanger.
   4. Piping systems shall not be braced to dissimilar parts of a building or to dissimilar building systems that may respond in a different mode during an earthquake. Examples: wall and a roof; solid concrete wall and a metal deck with lightweight concrete fill.
   5. Restraints shall be sized to fit the outside diameter of the pipe, tubing, or, where specified, the outside diameter of insulation.
   6. There shall be no contact between a pipe and restraint component of dissimilar metals. The Contractor shall prevent contact between dissimilar metals when restraining copper tubing by the use of copper-plated, rubber, plastic or vinyl coated, or stainless steel restraint components.
   7. Branch lines shall not be used to brace main lines.

8. Seismic bracing shall not limit the expansion and contraction of the piping system.

1.02 QUALITY ASSURANCE

A. References:
1. This section contains references to the following documents. They are a part of this section as specified and modified. Where a referenced document contains references to other standards, those documents are included as references under this section as if referenced directly. In the event of conflict between the requirements of this section and those of the listed documents, the requirements of this section shall prevail.
2. Unless otherwise specified, references to documents shall mean the documents in effect at the time of Advertisement for Bids or Invitation to Bid (or on the effective date of the Agreement if there were no Bids). If referenced documents have been discontinued by the issuing organization, references to those documents shall mean the replacement documents issued or otherwise identified by that organization or, if there are no replacement documents, the last version of the document before it was discontinued. Where document dates are given in the following listing, references to those documents shall mean the specific document version associated with that date, regardless of whether the document has been superseded by a version with a later date, discontinued or replaced.

Reference	Title
ANSI A58.1-82	Minimum Design Loads for Buildings and Other Structures
AISC Manual of Steel Construction	American Institute of Steel Construction, Manual of Steel Construction, Allowable Stress Design - 9th Edition
FEDSPEC WW-H-171e-78	Hangers and Supports, Pipe
MFMA-2-91	Metal Framing Standards Publication
MSS SP-58-93	Pipe Hangers and Supports - Materials, Design and Manufacture
MSS SP-69-91	Pipe Hangers and Supports - Selection and Application
SMACNA, PPIC	Guidelines for Seismic Restraints of Mechanical Systems and Plumbing Piping Systems

B. Approval: Seismic restraint load calculations specified in paragraph 3.01 shall be reviewed and signed by a structural engineer registered in the State of California.

PART 2 PRODUCTS

2.01 ACCEPTABLE PRODUCTS

A. Standard pipe restraints and components shall be manufactured by Carpenter & Patterson, B-Line, Kin-Line, ITT Grinnell, Michigan, Pipe Shields Incorporated, Superstrut, Unistrut, or approved equal. Pipe restraint materials shall conform to the requirements of MSS SP-58 and MFMA-1.

2.02 MATERIALS

A. General: Unless otherwise specified, restraints, including braces, pipe and structural attachments, shall be hot-dip galvanized after fabrication. Nuts, bolts and washers, fittings and accessories, may be mechanically zinc-coated except for those subject to moisture or corrosive atmosphere, which shall be type 316 stainless steel.

B. Pipe Attachments:
   1. Type 1s: Clevis Restraint Attachment: Clevis attachment shall be Type 1, clevis pipe hanger, as specified in Section 40 05 07-2.02 Pipe Hangers and Supports.
   2. Type 3s: Double Bolt Restraint Clamp: Restraint clamp shall be Type 3, double bolt pipe clamp, as specified in Section 40 05 07-2.02 Pipe Hangers and Supports.
   3. Type 4s: Roller Restraint Attachment: Roller attachment shall be Type 4, adjustable roller hanger, as specified in Section 40 05 07-2.02 Pipe Hangers and Supports. Hold down strap shall be carbon steel and sized as follows: pipe size 1 inch through 2 inch shall be 1 inch by 1/8 inch thick, pipe sizes 2 1/2-inch through 4 inch shall be 1 1/4-inch by 3/l6 inch thick, 6 inch pipe shall be 2 inch by 3/l6 inch thick, 8 inch pipe shall be 2 1/2-inch by 3/16 inch thick, 10-inch through 16-inch pipe shall be 2 1/2-inch by 1/4 inch thick, 20-inch pipe shall be 3 inch by 1/4 inch thick, and 24-inch pipe shall be 3 inch by 3/8 inch thick.
   4. Type 7s: U-Bolt Restraint: U-bolt restraint shall be Type 7, U-bolt, as specified in Section 40 05 07-2.02 Pipe Hangers and Supports.
   5. Type 13s: Framing Channel Strap Restraint: Strap restraint shall be Type 13, framing channel pipe strap, as specified in Section 40 05 07-2.02 Pipe Hangers and Supports.
   6. Type 14s: Pipe Clamp Restraint: Pipe clamp shall be carbon steel, with configuration and components equivalent to MSS and FEDSPEC Type 4. Rod attachment and longitudinal brace connection stud shall be carbon steel, fabricated and welded by the manufacturer.
      a. Steel pipe (insulated)--shall be Superstrut No. S-720, Kin-Line No. S475, or approved equal, with insulation shield.
      b. Steel pipe (uninsulated)--shall be Superstrut No. S-720, Kin-Line No. S475, or approved equal.
      c. Cast and ductile iron pipe--shall be Superstrut No. S-720, Kin-Line No. S475, or approved equal.
      d. Copper pipe (insulated)--shall be Superstrut No. S-720, Kin-Line No. S475, or approved equal, with insulation shield.
      e. Copper pipe (uninsulated)--shall be Superstrut No. S-720, Kin-Line No. S475, or approved equal, with insulation shield or dielectric lining.
      f. Plastic pipe--shall be Superstrut No. S-720, Kin-Line No. S475, or approved equal.

C. Trapeze Restraints:
   1. General: Unless otherwise specified, trapeze members shall have a minimum steel thickness of 12 gage, with a maximum deflection 1/240 of the span.

2. Type 20s: Single Channel Lateral Restraint: Trapeze restraint cross member shall be 1 5/8-inch square carbon steel framing channel, Unistrut P1000, B-Line B22, Superstrut A-1200, or approved equal. Pipe attachments shall be Type 13s or Type 7s specified in paragraph 2.02 Pipe Attachments. Rod stiffeners and lateral brace shall be as specified in paragraph 2.02 Braces and Fittings.
3. Type 21s: Double Channel Lateral Restraint: Trapeze restraint cross member shall be a double channel manufactured assembly such as Unistrut P1001, B-Line B22A, Superstrut A-1202, or approved equal. Pipe attachments shall be Type 13s or Type 7s specified in paragraph 2.02 Pipe Attachments. Rod stiffeners and lateral brace shall be as specified in paragraph 2.02 Braces and Fittings.
4. Type 22s: Double Channel Longitudinal Restraint: Trapeze restraint cross member shall be a double channel manufactured assembly such as Unistrut P1001, B-Line B22A, Superstrut A-1202, or approved equal. Pipe attachments shall be Type 13s or Type 7s specified in paragraph 2.02 Pipe Attachments. Rod stiffeners, longitudinal and lateral braces shall be as specified in paragraph 2.02 Braces and Fittings.

D. Braces and Fittings:
1. Seismic Brace Fitting: Seismic brace fitting shall be manufactured for use with industry standard framing channel. The fitting shall be carbon steel, welded construction, two-piece linked fitting. A means to reduce noise and vibration transmission between the linked fitting parts shall be provided. Seismic brace fittings shall be Superstrut C-749N series seismic brace, Kin-Line No. 633 seismic connector fitting, or approved equal.
2. Hanger Rod Stiffener Assembly: Rod stiffener channel shall be 1 5/8-inch square carbon steel framing channel, Unistrut P1000, B-Line B22, Superstrut A-1200, or approved equal. Rod stiffener clamps shall be complete with channel nut and shall be Superstrut ES-142, Kin-Line No. 635, or approved equal.
3. Type A1 Seismic Brace: Seismic brace shall be 1 5/8-inch square carbon steel framing channel, Unistrut P1000, B-Line B22, Superstrut A-1200, Kin-Line No. 4112, or approved equal.
4. Type A2 Seismic Brace: Seismic brace shall be 1 5/8-inch wide by 3 1/4-inch deep carbon steel framing channel, Unistrut P5000, B-Line B11, Superstrut H-1200, Kin-Line No. 8212, or approved equal.

E. Structural Attachments:
1. General: Unless otherwise specified, hanger rod structural attachments shall be as specified in Section 40 05 07. Structural attachments for longitudinal and lateral seismic braces shall be as specified in paragraph 2.02 Structural Attachments.
2. Type SA-1 Attachment: Brace fitting shall be as specified in paragraph 2.02 Braces and Fittings. Concrete anchors shall be as specified in Section 05 05 23 with embedment and location dimensions as specified.
3. Type SA-2 Attachment: Brace fitting shall be as specified in paragraph 2.02 Braces and Fittings. Concrete anchors shall be as specified in

Section 05 05 23 with embedment and location dimensions as specified. Framing channel shall be as specified in paragraph 2.02 Accessories.

4. Type SA-3 Attachment: Brace fitting shall be as specified in paragraph 2.02 Braces and Fittings. Cap screw, lockwasher and hex nut materials and finish shall be compatible with structural steel material.
5. Type SA-4 Attachment: Brace fitting shall be as specified in paragraph 2.02 Braces and Fittings.
6. Type SA-5 Attachment: Brace fitting shall be as specified in paragraph 2.02 Braces and Fittings. Four-inch x 3-inch x 3/8-inch angle shall be carbon steel.

F. Accessories:
1. Hanger Rods: Rods shall be carbon steel, threaded on both ends or continuous threaded and sized as specified.
2. Framing Channel: Framing channel shall conform to the Metal Framing Manufacturers Association standard MFMA-1. Framing channel shall be roll formed, 12-gage carbon steel. Channel shall have a continuous slot along one side with in-turned clamping ridges. Channel shall be Unistrut P1000 series, B-Line B22 series, Superstrut A-1200 series, or approved equal.
3. Rod Coupling: Rod coupling shall be carbon steel, with sight hole in center of coupling body, Grinnell Fig. 135, Superstrut H-119, or approved equal.

2.03 THERMAL PIPE HANGER SHIELD

A. Thermal shields shall be provided at seismic restraint locations on pipe requiring insulation. Thermal pipe hanger shields shall be as specified in Section 40 05 07-2.03. Stainless steel band clamps shall be provided on thermal shields at longitudinal pipe restraint locations.

2.04 PRODUCT DATA

A. The following information shall be provided as specified in Section 01330:
1. Seismic restraint locations and legend as specified in paragraph 3.01.
2. Load calculations as specified in paragraph 1.02 Approval.

PART 3 EXECUTION

3.01 PIPE RESTRAINT LOCATIONS

A. The first seismic restraint on a piping system shall be located not more than 10 feet from the main riser, entrance to a building or piece of equipment.

B. Cast iron pipe shall be braced on each side of a change in direction of 90 degrees or more. Joints in risers shall be braced or stabilized between floors.

C. No-hub and bell and spigot cast iron soil pipe shall be braced longitudinally every 20 feet and laterally every 10 feet.

D. Lateral bracing for one pipe section may also act as longitudinal bracing for the pipe section connected perpendicular to it, if the bracing is installed within 24 inches of the elbow or tee of the same size.

E. Seismic restraint locations and components shall be indicated on the piping layout drawings required by Section 40 05 01-2.04. The Contractor shall provide a legend giving load information and restraint component selection at each restraint location.

3.02 INSTALLATION

A. Rod stiffener assemblies shall be used at seismic restraints for hanger rods over 6 inches in length. A minimum of two rod stiffener clamps shall be used on any rod stiffener assembly.

B. Lateral and longitudinal bracing shall be installed between 45 degrees above and 45 degrees below horizontal, inclusive, relative to the horizontal centerline of the pipe.

C. Welded and bolted attachments to the building structural steel shall be in accordance with the requirements of the AISC Manual of Steel Construction. There shall be no drilling or burning of holes in the building structural steel without approval of the Engineer.

D. Embedded anchor bolts shall be used instead of concrete inserts for seismic brace installations in areas below water surface or normally subject to submerging.

E. The Contractor shall install thermal pipe hanger shields on insulated piping at required locations during restraint installation. Butt joint connections to pipe insulation shall be made at the time of insulation installation in accordance with the manufacturer's recommendations.

F. Restraint components in contact with plastic pipe shall be free of burrs and sharp edges.

G. Rollers shall roll freely without binding.

H. Plastic or rubber end caps shall be provided at the exposed ends of all framing channels that are located up to 7 feet above the floor.

END OF SECTION

SECTION 40 05 07.16
EXPANSION CONTROL FOR PIPING

PART 1 GENERAL

1.01 DESCRIPTION

A. Scope: This section specifies expansion control for the piping systems specified in paragraph 1.01 Operating Conditions. This section addresses pipe anchorage, pipe guides, and expansion control by either expansion joints or pipe deflection.

B. Definitions:

Term	Definition
Expansion joint	Any device containing one or more bellows used to absorb dimensional changes.
Main anchor	An attachment between a structure and a pipe which must withstand the full pipeline thrust due to pressure, pipe bending, pipe compression, flow, spring forces, pipe and contents weight and other pipe forces.
Intermediate anchor	An attachment between a structure and a pipe which withstands the same forces as a main anchor except the pressure forces.
Sliding anchor	An attachment between a structure and a pipe which absorbs forces in one direction while permitting motion in another.
Pipe guide	A device fastened to a structure, which permits the pipeline to move freely in only one direction, along the axis of the pipe.
Pipe section	That portion of pipe between two anchors.
Planar pipe guide	A device fastened to a structure, which permits transverse movement or bending of the pipeline in one plane.
Lateral direction	Direction perpendicular to the pipe axis
Longitudinal direction	Direction parallel to the pipe axis

C. Operating Conditions:

1. Expansion control as specified in this section shall be provided to control pipe movements and loads occurring as a result of pipeline temperature changes.
2. Those piping systems listed in the following table shall be provided with expansion control conforming to good engineering practice.

Piping system	Minimum temperature, degrees F	Maximum temperature, degrees F
BNR and MBR Air Piping	40 (exterior 35)	275 (exterior 250)

Piping system	Minimum temperature, degrees F	Maximum temperature, degrees F
All Plastic Piping (PVC)	40 (exterior 35)	90

1.02 QUALITY ASSURANCE

A. References:

1. This section contains references to the following documents. They are a part of this section as specified and modified. In case of conflict between the requirements of this section and those of the listed documents, the requirements of this section shall prevail.
2. Unless otherwise specified, references to documents shall mean the documents in effect at the time of Advertisement for Bids or Invitation to Bid (or on the effective date of the Agreement if there were no Bids). If referenced documents have been discontinued by the issuing organization, references to those documents shall mean the replacement documents issued or otherwise identified by that organization or, if there are no replacement documents, the last version of the document before it was discontinued. Where document dates are given in the following listing, references to those documents shall mean the specific document version associated with that date, whether or not the document has been superseded by a version with a later date, discontinued or replaced.

Reference	Title
AISC Manual of Steel Construction	American Institute of Steel Construction, Manual of Steel Construction, Allowable Stress Design - 9th Edition
EJMA-93	Standards of the Expansion Joint Manufacturers Association, Inc., Sixth Edition, 1993
EJMA-85	A Practical Guide to Expansion Joints, Copyright 1985, Expansion Joint Manufacturers Association, Inc.

B. Design:

1. The expansion control system shall be designed by the Contractor's Design Professional selected under Section 40 05 01-1.01 Scope. Expansion control details shall be designed in conjunction with preparation of pipe system hangers and seismic restraint systems drawings specified in Section 40 05 01-2.04. The resulting drawings and work product for the expansion control system shall bear the Design Professional's registration seal and signature. The requirement, however, shall not be construed as relieving the Contractor of responsibility for this portion of the work.

C. Design Guidelines:

1. The Design Professional shall use the following guidelines in preparation of the designs and calculations specified in paragraph 1.02 Design:

a. The difference between the minimum and maximum temperatures listed in the table in paragraph 1.01 Operating Conditions shall be used for calculating pipe expansion.
b. Published coefficients of thermal expansion for pipe materials shall be used for the listed temperature range. The source of the coefficients of expansion used in the calculations shall be included with the information provided as Product Data.
c. Expansion control systems shall be designed for maximum reliability. Unless otherwise indicated on the Drawings, "L", "U", or "Z" bends shall be employed to control expansion in preference over expansion joints.
d. Expansion control systems using pipe bends shall be designed to limit bending stress in the pipe associated with deflection at the worst case temperature difference. The maximum allowable bending stress shall be 1/3 of the yield stress for the pipe material. If loading conditions or uncertainties warrant, a lower allowable stress value shall be used. A recognized pipe bending stress calculation method and documentation supporting its use shall be provided as Product Data.
e. The requirements set forth in Section 40 05 06.23 shall prevail if expansion joints are used. Expansion control design for expansion joints shall conform to the guidelines given in the Standards of The Expansion Joint Manufacturers Association, Inc. (EJMA).
f. If the Design Professional chooses to use expansion control or pipe support methods that involve higher loadings on the structure than are specified and/or shown on the drawings, the Engineer shall be notified in the submittal required in Section 40 05 01-2.04. The requested loads shall be listed and the Engineer will redesign the structure as necessary at the Contractor's expense.
g. The test pressures listed in the PIPESPEC sheets shall be used when calculating pressure forces.
h. Pipe guides or planar pipe guides shall be provided to control the movement of pipes when "L", "U", or "Z" bends are used for expansion control. The guides shall be located as indicated in EJMA standards. An alternative recognized standard may be used for this purpose only upon approval by the Engineer.
i. For piping systems with potentially large loads, recommended main anchor locations are shown on the drawings. Intermediate anchors shall be provided as needed. Maximum forces that the structure can withstand at the main anchor points are noted on the drawings. Anchors shall be designed to attach to the structure and solidly to the pipe. Pipe clamps or U-bolts are not allowed unless they are designed to withstand the forces imposed upon the anchor and have stops welded to the pipe so that the pipe cannot slip in the anchor.
j. Anchors and guides shall be coordinated with the pipe support systems specified in Section 40 05 07 and seismic restraints specified in Section 40 05 07.13.
k. The design of the expansion control, pipe support and seismic restraints for the listed piping systems shall be integrated to provide maximum flexibility for maintenance access to equipment, appurtenances such as valves etc., and to the pipe itself.

l. The piping layout indicated shall be reviewed in relation to, surrounding structures, adjacent piping and equipment before selecting the anchors, guides, and expansion control method to be used at each point.
m. There shall be no metal-to-metal contact between a pipe and restraint component of dissimilar metals.
n. Branch lines shall not be used to anchor main lines.
o. For elevated pipe sections, fabricated support frames or other appropriate structures shall be designed to withstand the specified loads plus gravity and seismic loads. The supports shall be designed to provide access to equipment, walkways, gates, and other piping.

1.03 SUBMITTALS

A. The following information shall be provided in accordance with Section 01 33 00:
   1. Expansion control schedules as specified in paragraph 3.01.

PART 2 PRODUCTS

2.01 MATERIALS

A. Unless otherwise specified, anchors, and guides shall be manufactured of iron or steel, including braces, pipe and structural attachments, and shall be hot-dip galvanized after fabrication. Supports cast integrally with cast iron fittings are specifically prohibited for use in any application where shear forces may be imposed on the support. Structural anchors may be fabricated from structural steel and coated as specified in Section 09 90 00. Nuts, bolts and washers may be zinc-plated except for those subject to moisture or corrosive atmosphere, as specified in Sections 26 05 00-1.05 Corrosive Areas and 1.05 Hazardous (Classified) Areas, which shall be Type 316 stainless steel. Also listed in Section 26 05 00-1.05 Hazardous (Classified) Areas are corrosive areas specifically requiring fiberglass materials. In those areas, all pipe support, anchor and brace components (not just fittings and accessories) shall be made of fiberglass.

2.02 PRODUCT DATA

A. The following product data shall be provided as specified in Section 01 33 00:
   1. Anchor bolt calculations in accordance with Section 05 05 20 requirements.
   2. The Design Professional's reports and final certification, as specified under paragraph 3.03.

PART 3 EXECUTION

3.01 EXPANSION CONTROL SCHEDULES

A. General: Anchor, guide, and expansion joint locations shall be indicated on the piping layout drawings required by Section 40 05 01 and paragraph 1.02 Design. In addition, schedules shall be prepared as specified below.

B. Anchors:

1. The anchor schedule shall list as a minimum:
    a. Anchor Point Label
    b. Pipe Size and Service
    c. Contract Drawing No.
    d. Layout Drawing No.
    e. Forces
    f. Load, pounds
    g. Direction
    h. Anchor Description
    i. Remarks

C. Guides:
1. The guide schedule shall list as a minimum:
    a. Guide Label
    b. Pipe Size and Service
    c. Contract Drawing No.
    d. Layout Drawing No.
    e. Guide Description
    f. Remarks

D. Expansion Joints:
1. The expansion joint schedule shall list as a minimum:
    a. Expansion Joint Label
    b. Pipe Size and Service
    c. Contract Drawing No.
    d. Layout Drawing No.
    e. Movement, inches
        1) Lateral movement
        2) Compression movement
        3) Extension movement
        4) Angular movement
    f. Maximum Spring Force, pounds
    g. Test Pressure, PSIG
    h. Pressure Force, pounds
    i. Total Forces
    j. Load, pounds
    k. Direction
    l. Expansion Joint Description
    m. Special Features
    n. Remarks

3.02 INSTALLATION

A. The Contractor shall install the expansion control system in accordance with the drawings required in paragraph 1.02 Design.

B. Welded and bolted attachments to the building structural steel shall be in accordance with the requirements of the AISC Manual of Steel Construction. There shall be no drilling or burning of holes in the building structural steel without approval of the Engineer.

C. Unless otherwise specified, embedded anchor bolts shall be used instead of concrete inserts, wedge anchors, expansion anchors, adhesive, or other non-embedded type of anchor for expansion control installations in areas below water surface or normally subject to submerging.

D. The Contractor shall install thermal pipe hanger shields on insulated piping at required locations during guide installation. Butt joint connections to pipe insulation shall be made at the time of insulation installation in accordance with the manufacturer's recommendations. Anchors shall be directly connected to the pipe by welding or another acceptable, positive means.

E. Components in contact with plastic pipe shall be free of burrs and sharp edges.

F. Rollers shall roll freely without binding.

G. Plastic or rubber end caps shall be provided at the exposed ends of all framing channels that are located up to 7 feet above the floor.

3.03 INSPECTION AND CERTIFICATION

A. The Design Professional retained by the Contractor under the provisions of Section 40 05 01-1.01 Scope and paragraph 1.02 Design shall inspect the completed expansion control system at not less than bi-weekly intervals during construction and furnish the Engineer with monthly reports. The Design Professional shall inspect the completed expansion control system before the City assumes beneficial occupancy and provide written certification in accordance with Section 40 05 07 requirements.

END OF SECTION

SECTION 40 05 31
THERMOPLASTIC PROCESS PIPE

PART 1 GENERAL

1.01 DESCRIPTION

A. Scope: This section specifies polyvinylchloride, chlorinated polyvinylchloride, polyethylene, and polypropylene pipe and fittings.

B. Pipe Designations: The following plastic pipe designations are defined for consistency:

Designation	Definition
PVC	Polyvinylchloride
CPVC	Chlorinated polyvinylchloride
PE	Polyethylene
PP	Polypropylene

1.02 QUALITY ASSURANCE

A. References:

1. This section contains references to the following documents. They are a part of this section as specified and modified. Where a referenced document contains references to other standards, those documents are included as references under this section as if referenced directly. In the event of conflict between the requirements of this section and those of the listed documents, the requirements of this section shall prevail.
2. Unless otherwise specified, references to documents shall mean the documents in effect at the time of Advertisement for Bids or Invitation to Bid (or on the effective date of the Agreement if there were no Bids). If referenced documents have been discontinued by the issuing organization, references to those documents shall mean the replacement documents issued or otherwise identified by that organization or, if there are no replacement documents, the last version of the document before it was discontinued. Where document dates are given in the following listing, references to those documents shall mean the specific document version associated with that date, regardless of whether the document has been superseded by a version with a later date, discontinued or replaced.

Reference	Title
ASTM D1248	Polyethylene Plastics Molding and Extrusion Materials
ASTM D1784	Rigid Poly (Vinyl Chloride) (PVC) Compounds and Chlorinated Poly (Vinyl Chloride) (CPVC) Compounds
ASTM D1785	Poly (Vinyl Chloride) (PVC) Plastic Pipe, Schedules 40, 80, and 120

Reference	Title
ASTM D2241	Poly (Vinyl Chloride) (PVC) Plastic Pipe (SDR-PR)
ASTM D2464	Threaded Poly (Vinyl Chloride) (PVC) Plastic Pipe Fittings, Schedule 80
ASTM D2466	Poly (Vinyl Chloride) (PVC) Plastic Pipe Fittings, Schedule 40
ASTM D2467	Socket-Type Poly (Vinyl Chloride) (PVC) Plastic Pipe Fittings, Schedule 80
ASTM D2564	Solvent Cements for Poly (Vinyl Chloride) (PVC) Plastic Pipe and Fittings
ASTM D2657	Heat-Joining Polyolefin Pipe and Fittings
ASTM D2665	Poly (Vinyl Chloride) (PVC) Plastic Drain, Waste, and Vent Pipe and Fittings
ASTM D3034	Type PSM Poly (Vinyl Chloride) (PVC) Sewer Pipe and Fittings
ASTM D4101	Propylene Plastic Injection and Extrusion Materials
ASTM F402	Safe Handling of Solvent Cements and Primers Used for Joining Thermoplastic Pipe and Fittings
ASTM F437	Threaded Chlorinated Poly (Vinyl Chloride) (CPVC) Plastic Pipe Fittings, Schedule 80
ASTM F438	Socket-Type Chlorinated Poly (Vinyl Chloride) (CPVC) Plastic Pipe Fittings, Schedule 40
ASTM F439	Socket-Type Chlorinated Poly (Vinyl Chloride) (CPVC) Plastic Pipe Fittings, Schedule 80
ASTM F441	Chlorinated Poly (Vinyl Chloride) (CPVC) Plastic Pipe, Schedules 40 and 80
ASTM F477	Elastomeric Seals (Gaskets) for Joining Plastic Pipe
ASTM F493	Solvent Cements for Chlorinated Poly (Vinyl Chloride) (CPVC) Plastic Pipe and Fittings

PART 2 PRODUCTS

2.01 PVC PIPE

A. Pressure Pipe:
   1. PVC pressure pipe shall conform to Section 209-4 of Greenbook and as modified per Section 209-4.3 of Whitebook.

B. PVC Gravity Pipe:
   1. PVC non-pressure pipe shall conform to Section 207-17 of Greenbook and as modified by Whitebook (Sections 207-17.1, 207-17.2.2, 207-17.3.2, and 207-17.4.2).

2.02 CPVC PIPE

A. CPVC material for pipe and fittings shall conform to ASTM D1784, Class 23447-B. Pipe and fittings shall be in accordance with ASTM F441. All pipes shall be restrained. Comply with requirements of Section 209-4.5 of White book.

B. Schedule 80 CPVC socket type fittings shall conform to ASTM F439. Schedule 40 CPVC socket type fittings shall conform to ASTM F438. CPVC solvent weld cement for socket connections shall meet the requirements of ASTM F493. Schedule 80 CPVC threaded type fittings shall conform to ASTM F437.

2.03 PE PIPE

A. PE pipe shall meet the requirements of ASTM D1248, Type III, Grade P 34, Class C, 100 psi or as specified in Section 40 05 01, whichever is higher. Fittings shall be of the same material, molded socket fusion for sizes 4 inch diameter and smaller and molded or fabricated butt fusion for sizes 6 inch and larger. Fittings shall be 125 psi or as specified in Section 40 05 01, whichever is higher. Heat fusion welding shall be in conformance with ASTM D2657.

2.04 PP PIPE – NOT USED

2.05 PRODUCT DATA

A. The following information shall be provided in accordance with Section 01 33 00:
   1. Manufacturer's certificates of compliance with the specified standards and Contractor's layout drawings.

PART 3 EXECUTION

3.01 INSTALLATION

A. CPVC pipe 3 inches in diameter and smaller shall be joined by means of socket fittings and solvent welding in conformance with ASTM F402. Solvent-cemented joints shall be made in strict compliance with the manufacturer's/supplier's instructions and recommended procedures. Unless otherwise specified, PVC pipe 4 inches in diameter and greater shall be provided with restrained joints. Fittings shall be lined and coated as specified in Division 40. Unless otherwise specified, PVC and CPVC piping exposed to sunlight shall be painted with coating system NFM-4 as specified in Section 09 90 00.

B. Connections to different types of pipes shall be by means of flanges, specified adapters or transition fittings. Where sleeve type couplings are used, both shall be uniformly torqued in accordance with pipe manufacturer's recommendation. Foreign material shall be removed from the pipe interior prior to assembly.

C. Unless otherwise specified, PE pipe and fittings 4 inch diameter and smaller shall be joined by means of thermal socket fusion and pipe 6 inch and larger by thermal butt fusion. Butt-fusion joining of the pipes and fittings shall be performed with special joining equipment in accordance with procedures recommended by pipe

manufacturer. Tensile strength at yield of butt-fusion joints shall not be less than pipe. Flanged adapters shall be provided for connection to valves and where specified.

3.02 TESTING

A. Testing of plastic piping shall be as specified in Section 40 05 01.

END OF SECTION

SECTION 40 05 31.17

PVC GRAVITY SEWER, DRAIN, WASTE, VENT PIPE AND FITTINGS

PART 1 GENERAL

1.01 SUMMARY

A. This Section specifies Polyvinylchloride (PVC) Gravity Sewer Pipe and DWV (Drain, Waste, and Vent) Pipe. This Section also specifies fittings and joints for PVC Gravity Sewer Pipe and DWV Pipe.

1.02 RELATED SECTIONS

A. This section contains specific references to the following related sections. Additional related sections may apply that are not specifically listed below.
   1. Section 01 61 00 – Common Product Requirements
   2. Section 01 33 00 – Submittal Procedures
   3. Section 09 90 00 – Protective Coating
   4. Section 40 05 01 – Piping Systems

1.03 REFERENCES

A. This section contains references to the following documents. They are a part of this section as specified and modified. Where a referenced document contains references to other standards, those documents are included as references under this section as if referenced directly. In the event of conflict between the requirements of this section and those of the listed documents, the requirements of this section shall prevail.

Reference	Title
ASTM D1784	Rigid Poly (Vinyl Chloride) (PVC) Compounds and Chlorinated Poly (Vinyl Chloride) (CPVC) Compounds
ASTM D1785	Poly (Vinyl Chloride) (PVC) Plastic Pipe, Schedules 40, 80, and 120
ASTM D2321	Practice for Underground Installation of Thermoplastic Pipe for Sewers and Other Gravity Flow Applications
ASTM D2466	Poly (Vinyl Chloride) (PVC) Plastic Pipe Fittings, Schedule 40
ASTM D2564	Solvent Cements for Poly (Vinyl Chloride) (PVC) Plastic Pipe and Fittings
ASTM D2665	Poly (Vinyl Chloride) (PVC) Plastic Drain, Waste, and Vent Pipe and Fittings
ASTM D2855	Making Solvent-Cemented Joints with Poly (Vinyl Chloride) (PVC) Pipe and Fittings
ASTM D3034	Type PSM Poly (Vinyl Chloride) (PVC) Sewer Pipe and Fittings
ASTM D3212	Joints for Drain and Sewer Plastic Pipes Using Flexible Elastomeric Seals
ASTM F402	Safe Handling of Solvent Cements and Primers Used for Joining Thermoplastic Pipe and Fittings

Reference	Title
ASTM F477	Elastomeric Seals (Gaskets) for Joining Plastic Pipe
ASTM F656	Primers for Use in Solvent Cement Joints of Poly (Vinyl Chloride) (PVC) Plastic
ASTM F679	Poly (Vinyl Chloride) (PVC) Large-Diameter Plastic Gravity Sewer Pipe and Fittings
ASTM F1970	Special Engineered Fittings, Appurtenances or Valves for use in Poly (Vinyl Chloride) (PVC) or Chlorinated Poly (Vinyl Chloride) (CPVC) Systems

1.04 DEFINITIONS

A. Terminology used in this Section conforms to the following definitions:
   1. PVC: Polyvinylchloride

1.05 SUBMITTALS

A. Action Submittals:
   1. Procedures: Section 01 33 00.
   2. A copy of this specification section with each paragraph check-marked to indicate specification compliance or marked to indicate requested deviations from specification requirements. Check-marks (ü) denote full compliance with a paragraph as a whole. Underline deviations and denote each deviation with a number in the margin to the right of the identified paragraph. The remaining portions of the paragraph not underlined will signify compliance on the part of the Contractor with the specifications. Include a detailed, written justification for each deviation. Failure to include a copy of the marked-up specification section along with justification(s) for any requested deviations to the specification requirements, with the submittal shall be sufficient cause for rejection of the entire submittal with no further consideration.
   3. Piping layout drawings as specified in Section 40 05 01.
   4. Manufacturer's product data, catalog cuts, typical installation details, and dimensions. Indicate each Piping System Schedule where the product will be used.

1.06 DELIVERY, STORAGE AND HANDLING

A. Procedures: Section 01 61 00 for shipment and storage.

PART 2 PRODUCTS

2.01 MATERIALS

A. Provide PVC piping system materials as specified in Section 40 05 01 except as follows.

B. Gravity drainpipes 4-inch to 15-inch in diameter: PVC gravity sanitary sewer and drainpipe shall be green or blue in color and shall meet the requirements below:

C. Type of service and acceptable materials:
   1. Gravity Mains with depth of cover < 10 feet PVC SDR 35
   2. Gravity Mains with depth of cover 10-15 feet PVC SDR 26
   3. Gravity Mains with depth of cover > 15 feet Ductile Iron Pipe

D. For sewers up to 12-inch diameter crossing over water lines or crossing under water lines with less than 2-feet separation, provide minimum 150 psi pressure rated pipe conforming to ASTM D2241 with suitable PVC adapter couplings.

E. Joints: Spigot and integral wall section bell with solid cross section elastomeric or rubber ring gasket conforming to requirements of ASTM D3212 and ASTM F477, or ASTM D3139 and ASTM F477. Gaskets shall be factory-assembled and securely bonded in place to prevent displacement. Manufacturer shall test sample from each batch conforming to requirements ASTM D2444 F.

F. Fittings: Provide PVC gravity sewer sanitary bends, tee, or wye fittings for new sanitary sewer or drain construction. PVC pipe fittings shall be full-bodied, either injection molded, or factory fabricated. Saddle-type tee or wye fittings are not acceptable.

G. Pipe Stiffness. Determine pipe stiffness at 5 percent deflection in accordance with Test Method D 2412. Minimum pipe stiffness shall be 46 psi. For diameters 4-inches through 18-inches, test three specimens, each a minimum of 6-inches (150 mm) in length.

H. Flattening. Flatten three specimens of pipe, prepared in accordance with Paragraph 2.04F, in suitable press until internal diameter has been reduced to 60 percent of original inside diameter of pipe. Rate of loading shall be uniform. Test specimens, when examined under normal light and with unaided eye, shall show no evidence of splitting, cracking, breaking, or separation of pipe walls or bracing profiles. Perform the flattening test in conjunction with pipe stiffness test.

I. Joint Tightness. Test for joint tightness in accordance with ASTM D3212, except that joint shall remain watertight at minimum deflection of 5 percent.

J. Purpose of Tests. Flattening and pipe stiffness tests are intended to be routine quality control tests. Joint tightness test is intended to qualify pipe to specified level of performance.

2.02 COMPONENTS

A. PVC Solvent Weld Cement:
   1. Pipe and fittings 12-inch diameter and smaller: IPS 711 Weld-on Cement or Approved Equal.
   2. Pipe and fittings greater than 12-inch diameter: IPS 719 Weld-on Cement or Approved Equal.

3. Heavy bodied, medium setting.
4. ASTM 2564, 100 percent solvent and PVC resin. No fillers permitted.
5. Universal plastic pipe solvent is not acceptable.

B. Primer:
1. Staining solvent conforming to standard ASTM F656.
2. Manufactured by solvent weld cement manufacturer.

PART 3 EXECUTION

3.01 INSTALLATION

A. Drain, Waste and Vent Pipe:
1. Join by means of socket fittings and solvent cement welding in conformance with ASTM D2855 and ASTM F402.
2. Make solvent-cemented joints in compliance with the manufacturer's/supplier's instructions and recommended procedures.
3. Connections:
   a. Connect to different pipe materials by means of flanges, specified adapters, or transition fittings.
   b. Foreign material to be removed from the pipe interior prior to assembly.
4. Bedding and Backfill: As specified in Section 31 23 00. Blocking under pipe is not permitted.

B. Gravity Sewer / Drainage Pipe:
1. Join by means of Push-On Joints with Flexible Elastomeric Seals conforming to ASTM D3212.
2. Make push-on joints in compliance with the pipe manufacturer’s recommended installation practice.
3. Connections:
   a. Connect to different pipe materials by means of specified adapters, or transition fittings.
   b. Foreign material to be removed from the pipe interior prior to assembly.
4. Bedding and Backfill: As specified in ASTM D2321 and Section 31 23 00. Blocking under pipe is not permitted.
5. Provide restraint joints or thrust blocks as needed.

3.02 FIELD QUALITY CONTROL

A. Conduct tests in accordance with Section 40 05 01.

END OF SECTION

SECTION 40 05 31.53
PVDF PIPE

PART 1 GENERAL

1.01 SUMMARY

A. Contractor shall provide all labor, materials, equipment, and incidentals as shown, specified, and required to furnish and install polyvinylidene fluoride (PVDF) piping complete with all appurtenances.

B. Extent of piping is shown on the Drawings.

1.02 RELATED SECTIONS

A. Section 01 33 00 – Submittal Procedures

B. Section 01 61 00 – Common Product Requirements

C. Section 40 05 01 – Piping Systems

D. Section 40 05 06.33 – Piping Appurtenances

E. Section 40 05 07.16 – Expansion Control for Piping

F. Section 40 05 45 – Piping System Identification

1.03 REFERENCES

A. This section contains references to the following documents. They are a part of this section as specified and modified. Where a referenced document contains references to other standards, those documents are included as references under this section as if referenced directly. In the event of conflict between the requirements of this section and those of the listed documents, the requirements of this section prevail.

Reference	Title
ANSI B18.2	Square, Hex, Heavy Hex, and Askew Head Bolts and Hex, Heavy Hex, Hex Flange, Lobed Head, and Lag Screws (Inch Series)
ASTM A 193	Standard Specification for Alloy-Steel and Stainless Steel Bolting Materials for High-Temperature Service
ASTM A 194	Standard Specification for Carbon Steel, Alloy Steel, and Stainless Steel Nuts for Bolts for High Pressure or High Temperature Service, or Both
ASTM D2000	Standard Classification System for Rubber Products in Automotive Applications

1.04 DEFINITIONS

A. Terminology used in this Section conforms to the following definitions:

1. Maximum pressure: The greatest continual pressure at which the piping system is designed to operate.
2. Test pressure: The hydrostatic, air, or gas pressure used to determine system compliance.
3. Take down coupling: Pipe couplings that facilitate disassembly of piping systems without damage or demolition of piping system components.
4. Embedded/Encased piping: Piping enveloped in reinforced concrete, typically under structures and under roadways, where specified on the drawings.

B. Piping System Identification:
1. Process, mechanical, plumbing, utility, odor control, and HVAC piping system piping is identified by a two component alpha-numeric code, (Line Label) as follows:
   a. The first component of the code indicates the nominal line size.
   b. The second component of the code identifies the piping material.
   c. The third component of the code identifies the process Service or fluid being conveyed in the Piping System.
2. Mark and label Piping Systems as specified in Section 40 05 45.

1.05 SUBMITTALS

A. Action Submittals:
1. Procedures: Section 01 33 00.
2. A copy of this specification section, along with Section 40 05 07.16, with addendum updates included, and all referenced and applicable sections, with addendum updates included, with each paragraph check-marked to indicate specification compliance or marked to indicate requested deviations from specification requirements. Check marks (□) shall denote full compliance with a paragraph as a whole. If deviations from the specifications are indicated and, therefore requested by the Contractor, each deviation shall be underlined and denoted by a number in the margin to the right of the identified paragraph, referenced to a detailed written explanation of the reasons for requesting the deviation. The Engineer shall be the final authority for determining acceptability of requested deviations. The remaining portions of the paragraph not underlined will signify compliance on the part of the Contractor with the specifications. Failure to include a copy of the marked-up specification sections, along with justification(s) for any requested deviations to the specification requirements, with the submittal shall be sufficient cause for rejection of the entire submittal with no further consideration.
3. For each piping system, submit document listing pipe, fittings, linings, coatings, valves, flexible connectors, expansion joints, couplings, bolts, gaskets, restraints, and other items provided for each applicable pipe size and category.

B. Informational Submittals:
1. Procedures: Section 01 33 00

2. Pre-Construction Data:
   a. Design drawings and calculations for pipe supports, anchorage, seismic restraints, and expansion control systems as specified in Division 40. Drawings and calculations sealed and submitted by the Design Professional specified in this Section. The Design Professional shall affirm that loads on structures are within any stipulated load limits that may be noted on the contract documents.
   b. Submit for approval piping laying schedules and detailed drawings in plan and profile for all PVDF piping. Reference plan and sections to all applicable mechanical drawings and Instrumentation drawings.
   c. Submit piping layout drawings by plant area for all piping systems, including raceway, duct and other specified systems support. Indicate assembly details, location and placement of field welds, unions and flanges, fittings, valves, flushing connections, drains, sample taps, cathodic protection, seismic restraint system, expansion joints, guides, anchors, hangers, supports, and the provisions for thrust restraint, as well as any other pertinent details and appurtenances for all piping, including wall and floor penetrations, where applicable, in that area. Indicate location and clearances from structures and other utilities (ductwork, conduit, electrical tray, etc.). Include details of connections to new and existing equipment, piping and structures. Submit original layouts by the Contractor; photocopies of Contract Drawings are not acceptable. Identify the invert elevation of buried pipe at changes in slope, pipe crossings, and connections to structures on piping layout drawings in addition to providing coordinates for locating changes in horizontal alignment of buried pipe.
   d. Certificates: Submit manufacturer’s affidavit certifying that the pipe and fittings supplied comply with the requirements of this Sections including the referenced standards.
   e. Product Samples: Where specified or when directed by the Engineer, provide mill test results or product samples.
   f. Prior to the commencement of welding, submit current and complete documentation of the welder's qualifications.
   g. Safety plans for pneumatic pressure testing.
3. Post-Construction Data: Inspection reports, authored, sealed, and signed by the Design Professional retained under the provisions of this Section submitted to the Engineer. The Design Professional's final report shall be submitted to the Engineer before beneficial occupancy by the City.

1.06 QUALITY ASSURANCE

A. Review the drawings prior to installation of piping, conduit services, and fixtures. Identify any conflicts and cooperate with the Engineer to determine the adjustments necessary to resolve conflicts.

B. Confirm the routing of each section of pipeline with other services prior to commencement of installation. Advise the Engineer of any conflicts with existing services or services yet to be installed. Where necessary, amend the routing of pipework to avoid conflict and confirm with the Engineer.

C. Manufacturer's Qualifications:
   1. Manufacturer shall have verifiable experience in the production of PVDF pipe and fittings and shall show evidence of satisfactory service.
   2. PVDF pipe and fittings shall be the product of one manufacturer.

D. Butt Fusion Qualifications:
   1. All personnel performing fusion of butt ends of PVDF piping and accessories shall demonstrate verifiable experience with similar scope and complexity.
   2. Prior to the start of the work, Contractor shall submit a list of the fusers he proposes using and the type of welding for which each has been qualified.

1.07 DELIVERY, STORAGE, AND HANDLING

A. Procedures: Section 01 61 00 for Shipment and Storage.

B. Keep pipe clean and free of foreign material during storage and installation.

C. Move pipe spools by hand or with slings. Do not store or drop pipe directly on concrete or ground.

D. Gasketed Joints:
   1. Take care that the gaskets and flange faces are free of all foreign matter.
   2. Seat gaskets carefully and tighten bolts sequentially with a torque limiting wrench to assure uniform gasket compression.
   3. If a gasketed joint fails a pressure test, the gasket shall be discarded and replaced with a new gasket.

E. Threaded Joints:
   1. Tighten threaded plastic joints only with a strap wrench to prevent over-tightening.

F. Deliver pipe, fittings, and specials to site using loading methods which do not damage pipe or linings, or coatings.

G. Piping materials delivered to site will be clearly marked to indicate size, type, class/schedule and coatings.

H. Until ready for incorporation in the work, store on site as recommended by the piping materials manufacturer to prevent damage, undue stresses, or weathering.

I. Store materials at least 8 inches above ground. Provide sufficient supports to prevent undue bending.

J. Protect non-UV light inhibited plastic from sunlight.

K. Cover openings in piping, and temporarily seal to protect from contamination.

L. Protect materials and equipment from damage due to environmental conditions. Use protective cover and protect from surface water by elevating above floor or surrounding grade.

M. Protect unfinished work at end of each workday from damage, contamination and moisture by use of plugs, caps or covers.

N. Protect piping and valves from damage pending performance of system tests.

O. Use proper implements, tools, and facilities for the proper protection of the pipe. Exercise care in the installation so as to avoid damage to pipe, linings, and coatings.

P. Inspect each pipe and fitting prior to installation. Do not install damaged pipe or pipe with damaged protective coatings or linings.

Q. Prevent entry of foreign matter during handling, assembling, and installation. Use compressed air, wire brush, solvent and other acceptable means to remove all foreign matter from inside of pipe prior to installation. Remove residual scale, dirt and other foreign matter from interior of piping before final connections are made.

1.08 COORDINATION

A. Refer to Section 40 05 45 for process piping identification requirements.

B. Pipe Sleeves: Coordinate placement of sleeves and penetrations in cast-in-place concrete with raceway, duct, and pipe penetrations prior to concrete placement. Coordinate placement of sleeves and wall penetration prior to construction of masonry building elements.

PART 2 PRODUCTS

2.01 MATERIALS AND CONSTRUCTION

A. Pipe and Fittings:
   1. Pipe: PVDF, 230 psi rated, unpigmented, Asahi Super Proline or approved equal.
   2. Fittings: Same as pipe.

2.02 JOINTS

A. Standard butt fusion, except where connecting to unions, valves, and equipment with threaded connections that may require future disassembly.

B. Flanges: Ring type, flat faced flanges with epoxy powder coated ductile iron backing, 150 pound standard.

2.03 ACCESSORIES

A. Gaskets:

1. Viton, full face meeting ASTM D 2000 HK 710, durometer hardness 65 to 75, minimum tensile strength 1000 psi. Gaskets shall be Garlock Style 9518 Viton or approved equal.
2. When mating flange has raised face, use flat ring gasket and provide filler gasket between OD of raised face and flange OD to protect PVDF flange from bolting moment.

B. Thread Lubricant: Teflon tape.

C. Bolting:
1. Type 316 stainless steel, ASTM A193, Grade B8M hex head bolts and ASTM A194, Grade 8M hex head nuts.
2. Bolts shall be fabricated in accordance with ANSI B18.2 and provided with washers of the same material as the bolts.

2.04 THERMAL BONDING

A. All fused connections shall be joined by thermal butt fusion using a Proweld Butt Fusion Machine as manufactured by ASAHI/America, or approved equal as approved by the pipe manufacturer.

PART 3 EXECUTION

3.01 INSPECTION

A. Contractor shall inspect all piping and tubing to ensure that fabrication is free of defects in material and workmanship. The compatibility of all pipe, tube, fittings, and incidentals shall be verified

3.02 INSTALLATION

A. The Contractor shall be responsible for the proper installation of all PVDF Pipe system components. Installation of system components and interconnections between system components and other plant systems shall be in accordance with the Specifications, manufacturer's printed instructions, and approved shop drawings.

B. Alignment:
1. Pipe shall be installed level, plumb and parallel or perpendicular to the major axes of the equipment, unless otherwise shown.
2. Rotate fittings to prevent misalignment and stresses in pipe and connections to equipment.
3. Bolts in flanges shall be located symmetrically about the vertical axis of the adjacent pipe.
4. Where possible, locate pipe of similar diameters parallel and adjacent to one another.

C. Connections:
1. Connect pipe to equipment with connections designed to allow minor movement.

2. Field locate union fittings as required for component installation and removal.
3. Field taps in the PVDF piping system are not acceptable.

D. Final Cleaning:
1. Following installation sequentially isolate all piping and flush it with water at a scouring velocity of at least 2.5 feet per second.
2. Sequentially disconnect piping from equipment and isolate sections with blind plates or paddles.

E. Pressure Test:
1. Pressure test all PVDF piping at 60 psig in accordance with requirements of Section 40 05 01.

F. Drying:
1. Drain and dry the PVDF lines and interconnected components which will be in direct contact with the sulfuric acid using compressed nitrogen.

END OF SECTION

THIS PAGE INTENTIONALLY LEFT BLANK

SECTION 40 05 45
PIPING SYSTEM IDENTIFICATION

PART 1 GENERAL

1.01 SUMMARY

A. This section specifies the supply and installation of permanent identification labels and markers for piping systems.

B. Requirements for the supply and installation of permanent identification tags for valves are specified in Section 40 05 60.

1.02 RELATED SECTIONS

A. This section contains specific references to the following related sections. Additional related sections may apply that are not specifically listed below.
   1. Section 01 33 00 – Submittal Procedures
   2. Section 40 05 01 – Piping Systems
   3. Section 40 05 60 – Valves

1.03 REFERENCES

A. References:
   1. This section contains references to the documents listed below. They are a part of this section as specified and modified. Where a referenced document cites other standards, such standards are included as references under this section as if referenced directly. In the event of conflict between the requirements of this section and those of the listed documents, the requirements of this section shall prevail.
   2. Unless otherwise specified, references to documents shall mean the documents in effect at the time of Advertisement for Bids or Invitation to Bid (or on the effective date of the Agreement if there were no Bids). If referenced documents have been discontinued by the issuing organization, references to those documents shall mean the replacement documents issued or otherwise identified by that organization or, if there are no replacement documents, the last version of the document before it was discontinued. Where document dates are given in the following listing, references to those documents shall mean the specific document version associated with that date, regardless of whether the document has been superseded by a version with a later date, has been discontinued or has been replaced.

Reference	Title
ASME A13.1	Scheme for the Identification of Piping Systems
ANSI Z535.1	Safety Colors/APWA Uniform Color Code for Marking Underground Utilities

1.04 DEFINITIONS

A. Terminology used in this Section conforms to the following definitions:
   1. Embedded/Encased piping: Piping enveloped in concrete, typically under structures or under roadways.
   2. Exposed: All above grade services.
   3. Buried: Below grade walls or roofs; locations covered and in contact with earth/soil.

1.05 SUBMITTALS

A. Action Submittals:
   1. Procedures: Section 01 33 00.
   2. Provide a full line product brochure showing available Piping System Marker and Detectable Warning Tape standard text and color options. Submit all text and colors proposed for use.
   3. Provide product brochures and data sheets for tracer wire and splice kits. Submit all wire insulation colors proposed for use.
   4. Submit proposed tracer wire access box(es) for test leads. Submit electrical continuity test results upon completion.
   5. A copy of this Section, addendum updates included, with each paragraph check-marked to indicate compliance or marked to indicate requested deviations from Section requirements.

B. Informational Submittals:
   1. Procedures: Section 01 33 00
   2. Electrical continuity test results.
   3. Sample of each piping identification plastic marker used.
   4. Sample of each detectable warning tape used.

PART 2 PRODUCTS

2.01 PIPING SYSTEM MARKERS FOR EXPOSED PIPE

A. Identify material contained in exposed piping systems using a colored plastic marker legend system conforming to ASME A13.1.

B. For exposed piping, provide pre-coiled mechanically attached type colored markers that are easily removable. Adhesive type markers are not acceptable.
   1. Resistant to petroleum based oils and grease and meet criteria for humidity, solar radiation, rain, salt, fog, leakage and fungus specified by MIL-STD-810.
   2. Withstand a continuous operating temperature range of -40 to 250 degrees.
   3. Manufactured and applied in one continuous length of plastic including directional arrows. Markers comprised of letters and directional arrows individually applied to the maker are not acceptable. Legends and arrows printed on polyester subsurface and over laminated with Tedlar.
   4. Text size per ASME A13.1.
   5. Marking Services Style MS-995, Brady Style B-689, or approved equal.

C. Each piping system marker to be color coded for identification and labelled with the Process Service Identifier and directional flow arrows indicating the direction of flow in the pipe. Piping System marker background colors are specified in Section 40 05 01 for each process service. Except for piping system markers with an orange, yellow or white background color, provide white text and directional arrows for all piping system markers. Provide black text and directional arrows for pipe markers with an orange, yellow or white background.

2.02 DETECTABLE WARNING TAPE AND TRACER WIRE FOR BURIED PIPE

A. Provide detectable warning tape and tracer wire for all buried piping shall be similar to requirements in City Standard Drawings SDM-105 and SDW -131 respectively.

PART 3 EXECUTION

3.01 INSTALLATION OF PIPING SYSTEM MARKERS AND TRACER WIRE

A. Install detectable warning tape and tracer wire for all buried piping shall be similar to City Standard Drawing SDM-105 and SDW-131.

3.04 FIELD QUALITY CONTROL

A. Comply with manufacturer's handling and installation instructions.

B. Provide continuity testing of tracer wire as specified herein.

END OF SECTION

THIS PAGE INTENTIONALLY LEFT BLANK

SECTION 40 05 57.13
MANUAL ACTUATORS

PART 1 GENERAL

1.01 DESCRIPTION

A. This section specifies manual operators for valves and gates, and operator appurtenances.

1.02 REFERENCES

A. This section contains references to the following documents. They are a part of this section as specified and modified. Where a referenced document contains references to other standards, those documents are included as references under this section as if referenced directly. In the event of conflict between the requirements of this section and those of the listed documents, the requirements of this section shall prevail.

B. Unless otherwise specified, references to documents shall mean the documents in effect at the time of Advertisement for Bids or Invitation to Bid (or on the effective date of the Agreement if there were no Bids). If referenced documents have been discontinued by the issuing organization, references to those documents shall mean the replacement documents issued or otherwise identified by that organization or, if there are no replacement documents, the last version of the document before it was discontinued. Where document dates are given in the following listing, references to those documents shall mean the specific document version associated with that date, regardless of whether the document has been superseded by a version with a later date, discontinued or replaced.

Reference	Title
AWWA C500	Gate Valves 3 through 48 inch NPS, for Water and Sewage Systems

PART 2 PRODUCTS

2.01 GENERAL

A. Except as specified in valve and gate specification sections, manual operators shall be as specified herein. Operators shall be mounted on the valve or gate and provided as a unit. Each valve body or operator shall have cast thereon the word "OPEN," an arrow indicating the direction to open, and flow direction arrows.

2.02 OPERATORS

A. General: Manual operators shall have operating torques less than 80 foot-pounds. Unless specified otherwise, each manual operator shall be provided with an operating wheel. Unless specified otherwise, the direction of rotation of the operator

shall be counterclockwise for opening. Worm gear and travelling nut actuators are acceptable.

B. Wrench Nuts: NOT USED.

C. Chain Wheels: Chain wheels shall be ductile iron. Operating chains shall be galvanized.

2.03 OPERATOR APPURTENANCES – NOT USED.

2.04 PRODUCT DATA

A. Manufacturer's catalog information and other data confirming conformance to design and material requirements shall be provided in accordance with Section 01 33 00.

PART 3 EXECUTION

3.01 GENERAL

A. Installation shall be as specified herein. Valve operators shall be located so that they are readily accessible for operation and maintenance. Valve operators shall be mounted for unobstructed access, but mounting shall not obstruct walkways. Valve operators shall not be mounted where shock or vibration will impair their operation. Support systems shall not be attached to handrails, process piping, or mechanical equipment.

3.02 OPERATORS

A. General: Valves and gates shall be provided with manual operators, unless specified otherwise. Where possible, manual operators shall be located between 48 inches and 60 inches above the floor or a permanent work platform.

B. Wrench Nuts: NOT USED.

C. Chain Wheels: Unless otherwise specified, valves with centerlines more than 7 feet, 6 inches above the specified operating level shall be provided with chain wheels and operating chains. Chain wheel operated valves shall be provided with a chain guide. Operating chains shall be looped to extend within 4 feet of the specified operating level below the valve. For plug-type valves 8 inches and larger, the operator shall be provided with a hammer blow wheel. Hooks shall be provided for chain storage where the chain may hang in a walkway.

3.03 OPERATOR APPURTENANCES – NOT USED.

END OF SECTION

SECTION 40 05 57.23
POWERED ACTUATORS

PART 1 GENERAL

1.01 DESCRIPTION

A. Scope: This section specifies powered actuators for valves and gates and actuator appurtenances.

B. Types:
   1. For use in the control valve schedule in Section 40 06 20.13 and in this section, powered actuators are defined as follows:

Actuator Type (ACTUSPEC)	Service	Definition
EMTT	Throttling (Modulating)	Electric motor multi-turn
EQTT	Throttling (Modulating)	Electric motor quarter-turn
EMTI	Isolating (Open-Close)	Electric motor multi-turn
EQTI	Isolating (Open-Close)	Electric motor quarter-turn
PDT	Throttling (Modulating)	Pneumatic diaphragm
PDI	Isolating (Open-Close)	Pneumatic diaphragm
PCT	Throttling (Modulating)	Pneumatic cylinder
PCI	Isolating (Open-Close)	Pneumatic cylinder

1.02 REFERENCES

A. This section contains references to the following documents. They are a part of this section as specified and modified. Where a referenced document contains references to other standards, those documents are included as references under this section as if referenced directly. In the event of conflict between the requirements of this section and those of the listed documents, the requirements of this section shall prevail.

B. Unless otherwise specified, references to documents shall mean the documents in effect at the time of Advertisement for Bids or Invitation to Bid (or on the effective date of the Agreement if there were no Bids). If referenced documents have been discontinued by the issuing organization, references to those documents shall mean the replacement documents issued or otherwise identified by that organization or, if there are no replacement documents, the last version of the document before it was discontinued. Where document dates are given in the following listing, references to those documents shall mean the specific document version associated with that date, regardless of whether the document has been superseded by a version with a later date, discontinued or replaced.

Reference	Title
ASTM A519	Seamless Carbon and Alloy Steel Mechanical Tubing
ASTM B584	Copper Alloy Sand Castings for General Applications
JIC P-1	Pneumatic Standards for Industrial Equipment and General Purpose Machine Tools
NEMA ICS-2	Industrial Control Devices, Controllers and Assemblies

1.03 SUBMITTALS

A. The following information shall be provided in accordance with Section 01 33 00:

1. A copy of this specification section, with addendum updates included, and all referenced and applicable sections, with addendum updates included, with each paragraph check-marked to indicate specification compliance or marked to indicate requested deviations from specification requirements. Check marks shall denote full compliance with a paragraph as a whole. If deviations from the specifications are indicated, and therefore requested by the Contractor, each deviation shall be underlined and denoted by a number in the margin to the right of the identified paragraph, referenced to a detailed written explanation of the reasons for requesting the deviation. The Construction Manager shall be the final authority for determining acceptability of requested deviations. The remaining portions of the paragraph not underlined will signify compliance on the part of the Contractor with the specifications. Failure to include a copy of the marked-up specification sections, along with justification(s) for any requested deviations to the specification requirements, with the submittal shall be sufficient cause for rejection of the entire submittal with no further consideration.
2. A copy of the contract document control diagrams and process and instrumentation diagrams relating to the submitted equipment, with addendum updates that apply to the equipment in this section, marked to show specific changes necessary for the equipment proposed in the submittal. If no changes are required, the drawing or drawings shall be marked "no changes required". Failure to include copies of the relevant drawings with the submittal shall be cause for rejection of the entire submittal with no further review.
3. Manufacturer's catalog information and other data confirming conformance to design and material requirements.
4. Application sheets and schedules for each valve and actuator showing required mounting, operating torque for valve, torque capacity of actuator, and power or air pressure requirements. Valve identification (tag) number shall be clear for each application.
5. List of components being provided for each valve, actuator and positioner.

PART 2 PRODUCTS

2.01 GENERAL

A. Actuators shall be factory-mounted on the valve or gate and provided as a unit. Each valve body or actuator shall have cast thereon the word "OPEN," an arrow indicating the direction to open, and flow direction arrows.

B. General: Actuators shall be sized to produce an operating torque equal to twice the maximum required valve operating torque under the specified flow conditions. Specific requirements for each type powered actuator are specified on the actuator specification sheets in paragraph 3.04.

C. Electric Actuators
   1. General: Unless otherwise specified, electric actuators shall be provided in accordance with the actuator specification sheets and the following requirements.
   2. Motor: Actuator motors shall be heavy duty, specifically designed for valve or gate actuator service. Motors shall be of totally-enclosed, non-ventilated construction. Motor shall have an internal space heater with nominal rating of 25-watts. Motors shall be rated as specified in Section 40 06 20.13 and shall be or shall incorporate:
      a. Four-pole 1800 RPM or provide pole-speed as required for the application.
      b. Suitable for use with 460 volt, 3-phase, 60-Hertz power with +/- 10% voltage fluctuation or 120 volt, 1-Phase, 60 Hz with +/-10% voltage fluctuation as specified in the actuator schedule.
      c. NEMA Class F insulation.
      d. Thermistor for thermal protection embedded in the motor windings.
      e. Automatic motor overload relay reset.
      f. Four conduit openings.
   3. Enclosure: Motor and electrical enclosures shall be rated for the application and location specified:
      a. NEMA-4 Weatherproof
      b. NEMA-6 Submersible
      c. NEMA-7 Explosion proof
   4. Motor Starter: Actuator shall be provided with a three phase full voltage reversing starter rated at 30-amperes both mechanically and electrically interlocked with overload protection or elements in each of the three poles.
      a. Control Transformer shall be epoxy encapsulated and impregnated and rated at a minimum of 75VA with 120Vac secondary and other required secondary voltages of 18 Vac and 12 Vac as required, with short-circuit and overload protection.
      b. Provide lockable internal circuit breaker or internal disconnect switch where possible.
   5. Disconnect Switch: Actuator shall be provided with a lockable, heavy-duty, nonfused-disconnect switch that is close-coupled to the motor actuator.

6. Gearing: Gearing shall be double-reduction, with a helical gear and pinion forming the first reduction and a worm and worm gear forming the second. The helical gear and pinion shall be fabricated from heat-treated alloy steel with hobbed and finished shaved teeth. The worm shall be fabricated from heat-treated alloy steel, ground, carburized and hardened. The worm gear shall be fabricated from high tensile strength bronze with hobbed teeth.
   a. The stem nut shall be fabricated from high tensile strength bronze and shall be the two-piece type, when possible. It shall be possible to remove the stem nut from rising stem actuators from the top without removing the actuator from the valve or gate, disconnecting any electrical wiring, or disassembling any of the gearing. All gearing shall be designed to withstand a 100 percent overload.
7. Torque Switch: Electric actuators shall be provided with a double-torque switch set to disengage motor power at 75 percent of the shaft's design torque. The torque switch shall operate in both the opening and closing directions and shall operate during the complete cycle without the use of auxiliary relays, linkages, latches, or other devices.
   a. Each side of the torque switch shall have a numbered dial for set point adjustment. A calibration tag shall be mounted near each switch for correlating the dial settings with output torque.
8. Manual Actuator: Electric actuators shall be provided with a handwheel for manual operation. The handwheel shall not rotate during motor operation nor shall a locked motor prevent manual operation. Motor or manual selection shall be accomplished by a positive declutching knob or lever which will disengage the motor and motor gearing mechanically but not electrically. Prohibit manual and motor simultaneously operation. Hand operation shall not require more than 100 pounds of rim effort at maximum torque.
9. Hammer Blow Device: Electric actuators shall be provided with a built-in lost-motion device that allows sufficient travel of the worm gear, prior to engaging the stem nut, for the motor to reach full speed. This action shall impart a "hammer blow" to start the valve or gate in motion in either direction. The load shall be shared equally by two lugs cast integrally on the drive sleeve.
10. Conduit Openings: Electric actuators shall be provided with the largest available: power conduit opening; control conduit opening; and instrument conduit opening.

2.02 ACTUATOR APPURTENANCES

A. Tubing: Unless otherwise specified, tubing furnished with powered actuators shall be in Copper Tubing.

B. Tube Fittings: Unless otherwise specified, tube fittings furnished with powered actuators shall be Plastic Tubing.

C. Air Pressure Filter Regulators:
   1. Filter regulators shall be provided where specified. Filter regulators shall have aluminum bodies and a second tapped output gage connection. Filter regulators shall be provided with an output pressure gage and range spring appropriate for the intended application. The output pressure gage shall be a minimum of

2 inches in diameter and shall have an accuracy of plus or minus 2 percent of scale, or better.

2. The filter element shall be 40 micron, replaceable and shall be made of resin-impregnated cellulose. The filter dripwell shall be equipped with a drain cock. Filter regulators shall be adjustable over the spring range by means of a wrench-adjustable set screw. The set screw shall be equipped with a lock nut. Filter regulators shall be equipped with an internal relief valve to maintain the output pressure at set point during periods of no flow. Filter regulators shall be Fisher Type 67FR, or approved equal.

D. Identification Tags: Each powered actuator shall be provided with a 16-gage stainless steel identification tag that bear the equipment description and tag number of the actuator, as specified. Characters shall be 1/4 inch, die-stamped. Identification tags shall be securely attached to the actuator in a readily visible location using stainless steel screws or wire.

2.03 PRODUCT DATA

A. The following information, and technical data for all equipment specified in this section shall be provided in accordance with Section 01 33 00.
   1. Testing procedures and forms specified in paragraph 3.02 General Requirements.
   2. Operating and maintenance data in conformance with Section 01 78 23.

PART 3 EXECUTION

3.01 INSTALLATION

A. General:
   1. Installation shall be as specified herein. Valve actuators shall be located so that they are readily accessible for operation and maintenance and mounted for unobstructed access.
      a. Valve actuator mounting shall not obstruct walkways.
      b. Valve actuator support systems shall not be attached to handrails, process piping, or mechanical equipment.
      c. Valve actuators mounting shall not be located where shock or vibration will impair their operation.

B. Powered Actuators:
   1. General: Powered actuators shall have their manual operating accessory, where possible, located between 48 inches and 60 inches above the floor or a permanent work platform
   2. Identification Tags: Tags shall be located in a clearly visible location on the valves. If necessary, reposition and reattachment with stainless steel screws or wire.
   3. Electrical Power Wiring: Electric power wiring and equipment shall be in compliance with Division 26.

4. Signal Wiring: Electrical signal wiring and equipment shall be in compliance with Division 26.

3.02 TESTING

A. General Requirements: Testing shall be performed in accordance with Section 01 45 20, and this section. No required test shall be applied without prior notice to the Construction Manager to witness any test. At least 14 days before the commencement of any testing activity, a detailed step-by-step test procedure, complete with forms for the recording of test results shall be provided. All equipment necessary to perform the required tests shall be provided.

B. Piping Testing:
   1. Pneumatic Piping Systems: Pneumatic piping systems shall be tested for leaks.
   2. Liquid Piping Systems: Liquid piping systems shall be tested for leaks in compliance with Section 40 05 01.

3.03 TRAINING

A. Operation and maintenance training for the equipment provided under this section shall be provided for the City's personnel in accordance with Section 01 91 14.

3.04 ACTUATOR SPECIFICATION (ACTUSPEC) SHEETS

A. Applicable ACTUSPEC sheets are included below.

C. Actuator Type:	EQTI – 120 Vac, 1-Phase, 60-Hertz
Description:	Electric Quarter-turn Isolation valve actuator
Construction:	Actuators shall be Worcester Series 36, Bettis-SCE300, or approved equal; modified as necessary to provide the specified features and to meet the specified operating requirements.
Drive Motor:	Non-reversing, brushless, shaded pole 120 Vac, single phase provided with a thermal overload protector to stop the motor if the temperature exceeds approximately 250 degrees F and reset automatically when the motor cools.
Enclosure:	Actuator shall be housed in a NEMA 4 rated enclosure with a corrosion-resistant baked finish.
Gear Train:	The valve shall be directly attached to the actuator with no external intermediate gearing or linkages. Actuator shall drive the valve 90 degrees in approximately 5 seconds through a sealed, permanently lubricated gear train.
Position Signal:	Separate momentary contact closure for open and close.
Position Switches:	Actuator travel shall be controlled by an internal limit switch activated by positive detents located on the output gear. An additional SPDT position switch rated for 5 amps at 120 Vac shall be provided for remote indication.
Calibration:	Application, sizing information, and actuator requirements are specified in Section 40 06 20.13.
Controller:	The controller shall be an unfused disconnect type combination starter in compliance with NEMA ICS. Actuators shall be provided with an integral control station that includes an "OPEN" pushbutton, a "CLOSE" pushbutton, and a "STOP" pushbutton.
Actuator Type:	EQTI – 120 Vac, 1-Phase, 60-Hertz (continued)

Momentary operation of the "OPEN" or "CLOSE" pushbutton shall cause the actuator to drive the valve or gate to the appropriate limit.

Momentary operation of the "STOP" pushbutton shall cause the actuator to stop. Terminals for remote "OPEN" and "CLOSE" pushbuttons shall be provided.

D. Actuator Type: PDT

Description: Pneumatic diaphragm type throttling actuator

Construction: Actuators shall be Fisher Controls Type 1051; or approved equal, modified as necessary to provide the specified features and to meet the specified operating requirements.

Electro-pneumatic Transducer: Actuators shall be provided with an electro-pneumatic transducer that receives a direct current input signal and use a flapper-nozzle, torque motor, and a pneumatic relay to convert the input signal into a proportional pneumatic output signal.

The electro-pneumatic transducer shall be housed in a caste aluminum, explosion proof case, specifically designed for direct mounting on valve actuators. The electro-pneumatic transducer shall be provided with an air supply filter regulator and gage.

Input signal shall be 4 to 20 mAdc and the output signal shall be 3 to 15 psig, unless otherwise specified. Signal input impedance shall not exceed 180 ohms.

Air supply shall be 20 psig, unless otherwise specified. Zero and span shall be screwdriver adjustable and located within the case. It shall be possible to change the transducer from direct-acting to reverse-acting in the field without the need for additional parts or special tools.

The electro-pneumatic transducer shall be Fisher Controls Type 546, or approved equal.

Pneumatic Positioner: Actuators shall be provided with a pneumatic positioner with a characterizable-cam, of the force-balance type with moving parts including feedback spring enclosed in a gasketed weatherproof case.

Designed for use with rotary valves in throttling applications and for direct mounting on valve actuators.

Actuator Type: PDT (continued)

Signal input shall be 3 to 15 psig, unless otherwise specified. It shall be possible to change the positioner from direct-acting to reverse-acting in the field without the need for additional parts or special tools. The positioner air supply filter regulator shall operate at supply pressures up to 150 psig. Maximum steady-state air consumption shall not exceed 10 scfh.

Linearity shall be plus or minus 1 percent of span, or better; hysteresis shall be plus or minus 0.1 percent of span, or better.

The positioner shall be provided with signal input, positioner output, air supply gages, and an integral bypass valve that allows the signal input to pass directly to the valve actuator.

The positioner shall be provided with a characterized-cam designed to linearize the flow rate through the associated valve with respect to the signal input.

The pneumatic positioner shall be Fisher Controls Type 3610J, or approved equal.

E. Actuator Type: PDI

Description: Pneumatic diaphragm type isolating actuator

Construction: Actuators shall be Fisher Controls Type 1051; or approved equal, modified as necessary to provide the specified features and to meet the specified operating requirements.

Solenoid Pilot Valve: Actuators shall be provided with a factory-mounted and piped pilot solenoid valve. Unless otherwise specified, supply air tubing shall be 3/8 inch. Pilot solenoid valves shall be direct-acting, three-way with 1/4-inch NPTF ports.

Unless otherwise specified, solenoid valves shall be designed to seal the pressurized (supply) port and exhaust the actuator when de-energized. Solenoid valves shall have combination NEMA 7C, 7D, and 4 enclosures with the coils fully encapsulated with Class H insulation, and rated for continuous duty at 120 volts AC.

Pilot solenoid valves shall be CSA certified and UL listed. A supply air filter regulator with a gage shall be provided with each pilot solenoid valve. Materials of construction shall be as follows:

Component	Material
Body	Brass, unless otherwise specified
Seal	Teflon or Buna-N
Disc	Teflon or Buna-N
Core tube	Type 305 stainless steel
Core and plug nut	Type 430F stainless steel
Core springs	Type 302 stainless steel

Solenoid valves shall be Automatic Switch Company, Series 8320, or approved equal, modified as necessary to provide the specified features.

Actuator Type: PDI (continued)

Position Switch: Actuators shall be provided with position switches with gold Form C (SPDP) contacts rated not less than 1-ampere at 120 volts AC and 0.4-amperes at 24 volts DC.

Unless specified otherwise, one set of limit switches shall be set to actuate when the valve is less than 3 percent open, and the second set shall be set to actuate when the valve is more than 97 percent open.

Limit switches shall be enclosed in a NEMA 7 explosion proof case, rotary type, positively coupled to the actuator.

Limit switches shall be Fisher Type 304, or approved equal.

F. Actuator Type: PCT

Description: Pneumatic cylinder type throttling actuator

Construction: Actuators shall be Worchester Series 39; Keystone Series F-790; or approved equal, modified as necessary to provide the specified features and to meet the specified operating requirements.

Electro-pneumatic Transducer: Actuators shall be provided with an electro-pneumatic transducer that receives a direct current input signal and uses a flapper-nozzle, torque motor, and a pneumatic relay to convert the input signal into a proportional pneumatic output signal.

The electro-pneumatic transducer shall be housed in a cast aluminum, explosion proof case, specifically designed for direct mounting on valve actuators. The electro-pneumatic transducer shall be provided with an air supply filter regulator and gage.

The input signal shall be 4 to 20 mAdc and the output signal shall be 3 to 15 psig, unless otherwise specified. Signal input impedance shall not exceed 180 ohms.

The air supply shall be 20 psig, unless otherwise specified. Zero and span shall be screwdriver adjustable and located within the case. It shall be possible to change the transducer from direct-acting to reverse-acting in the field without the need for additional parts or special tools.

The electro-pneumatic transducer shall be Fisher Controls Type 546, or approved equal.

Pneumatic Positioner: Actuators shall be provided with a pneumatic positioner of the characterizable-cam force-balance type with moving parts including feedback spring enclosed in a gasketed weatherproof case.

Actuator Type: PCT (continued)

The pneumatic positioner shall be designed for use with double-acting or spring-return pneumatic cylinders, for use in throttling applications, and for use with direct mounting on valve actuators. It shall be possible to change the positioner from direct-acting to reverse-acting in the field without the need for additional parts or special tools.

Signal input shall be 3 to 15 psig, unless otherwise specified. The air supply filter regulator shall operate at supply pressures up to 150 psig with the maximum steady-state air consumption not to exceed 0.4 scfm at 80 psig supply pressure. Provide gages for the signal input, the positioner output, and air supply.

Linearity:	Plus or minus 1 percent of span;
Hysteresis:	Plus or minus 2.5 percent of span;
Deadband:	Not exceed 1.0 percent of span;
Resolution:	Not less than 0.25 percent of span;
Repeatability:	Plus or minus 0.5 percent of span.

The positioner shall be provided with a characterized cam designed to linearize the flow rate through the associated valve with respect to the signal input.

The pneumatic positioner shall be Worchester Series V15, Keystone Type A, or approved equal.

G. Actuator Type: PCI

Description: Pneumatic cylinder type isolating actuator

Construction: Actuators shall be Worchester Series 39; Keystone Series F-790; or approved equal, modified as necessary to provide the specified features and to meet the specified operating requirements.

Solenoid Pilot Valve: Solenoid pilot valves shall be factory mounted directly over the actuator ports with no external tubing. Lapped-spool, floating-sleeve type, suitable for continuous service on dry, non-lubricated instrument quality air, and suitable for supply pressures between 25 and 125 psig. A supply air filter regulator with a gage shall be provided with each pilot solenoid valve.

Solenoid pilot valves shall be four-way, five-port, direct-acting with integral speed control needle valves and mufflers on each exhaust port and suitable for three-way operation by blocking the unused cylinder port.

Solenoid pilot valves shall be provided with non-locking recessed manual override and shall comply with JIC P-1, except that NEMA 7D cases shall be provided in hazardous areas.

Solenoid pilot valves and supply air piping shall be sized to provide full stroking of the actuator and connected control valve within 3 seconds, with speed control needles fully open.

Position Switch: The position switches shall have gold Form C contacts rated at 1-amperes at 120 volts AC and 0.5-amperes at 24 volts DC.

Unless specified otherwise, one set of limit switches shall be set to actuate when the valve is less than 3 percent open, and the second set shall be set to actuate when the valve is more than 97 percent open.

Actuator Type: PCI (continued)

Limit switches shall be enclosed in a NEMA 7 explosion proof case and be rotary type, positively coupled to the actuator.

Limit switches shall be Fisher Type 304, or approved equal.

END OF SECTION

SECTION 40 05 59.23
FABRICATED SLIDE GATES

PART 1 GENERAL

1.01 SUMMARY

A. This section specifies the minimum requirements for corrosion-resistant fabricated slide gates (gates) for control of wastewater flow as shown on the Drawings and specified herein. Gates shall be all 316L stainless steel construction. The scope of supply shall include gate frames, slides, seals, stems, stem guides, operators, floor stands, gate enclosures where specified, and all other appurtenances, in-place and complete. Powered operators for gates are specified in Section 40 06 20.13.

B. Equipment List: Equipment provided under this section is listed in paragraph 1.04, Service Requirements.

1.02 QUALITY ASSURANCE

A. Referenced Standards: This Section incorporates by reference the latest revisions of the following documents. In case of conflict between the requirements of this Section and the listed documents, the requirements of the Contract Specifications shall prevail.

Reference	Title
ASTM A240	Standard Specification for Chromium and Chromium-Nickel Stainless Steel Plate, Sheet, and Strip for Pressure Vessels and for General Applications
ASTM A276	Standard Specification for Stainless Steel Bars and Shapes
ASTM D2000	Standard Classification System for Rubber Products in Automotive Applications
AWWA C561-12	Fabricated Stainless Steel Slide Gates
ASTM A380	Standard Practice for Cleaning, Descaling, and Passivation of Stainless Steel Parts, Equipment, and Systems

B. Unit Responsibility: Unit responsibility, as specified in Section 43 05 11, is assigned to the Wastewater System Supplier (WWSS) for the gates and appurtenances specified in this Section and for the powered operators specified in Section 40 06 20.13.

C. All gates for this project shall be supplied by the same Manufacturer, who shall be fully experienced, reputable, and qualified in the manufacturing of the equipment furnished and who has been regularly fabricating gates and appurtenances.

1.03 SUBMITTALS

A. Procedures: Section 01 33 00.

a. Copy of this Section, with each paragraph check-marked to indicate specification compliance or marked to indicate requested deviations from specification requirements.

b. Check-marks (✓) to denote full compliance with a paragraph as a whole. Underline deviations and denote by a number in the margin to the right of the identified paragraph. The remaining portions of the paragraph not underlined will signify compliance. Include a detailed, written justification for each deviation.

c. Failure to include a copy of the marked-up specification sections with justification(s) for any requested deviation will cause rejection of the entire submittal with no further consideration.

B. Product information, calculations, charts and graphs demonstrating compliance with the requirements of this Section and the Drawings.

C. Plans, elevations, sections, and details showing dimensions and mounting requirements for each gate specified.

D. Manufacturer's data including materials of construction, construction details of equipment, and weight of equipment.

E. Manufacturer's product literature.

F. Electric motor operator data, where applicable, including manufacturer's catalog information, complete dimensional data, drive unit size, calculations substantiating selection and wiring diagrams.

G. Certificate of unit responsibility attesting that unit responsibility has been assigned as specified in this Section and Section 43 05 11. No other submittal material will be reviewed until the certificate has been received and found to be in conformance with these requirements.

H. Results of factory testing including leak testing per AWWA C-561, Section 5.22.

I. Name, location and qualifications of the passivation shop.

J. Certification attesting that all gate components have been cleaned, passivated and tested in accordance with the procedures described in this section

K. Manufacturer's operation and maintenance manual defining maintenance requirements.

1.04 SERVICE REQUIREMENTS

A. Performance Requirements:

1. Gates are intended to isolate channels and pipes or to control water surface elevations.
2. Gates shall be designed for the Design Head specified. The Design Head is defined as the maximum head that will be applied to the gate. The Design Head is measured from the maximum water surface elevation to the bottom of the gate.

3. Slides and frames shall have a safety factor of 5 with regard to ultimate tensile, compressive and shear strength; calculations shall be submitted to show conformance.
4. Gates shall comply with field leakage tests as defined in AWWA C561.
5. Gates shall not require exercise at a frequency of more than once per year to meet the extended warranty requirements described in this section.
6. Gates shall be passivated prior to shipping in accordance with the requirements of this section.

B. See the Gate Schedule for specific dimensional and design requirements.

Gate Schedule

Equipment Number	Gate Type [a]	Size W X H [b] (inches)	Frame Type [c]	Frame Mounting [d]	Design Head [e], feet		Operator Type [f]	Operator Mount [g]	Special Feature [h]
					Seating	Unseating			
ME-400	W	102 x 24	SC	6	2.20	N/A	MH	YTT	DS
ME-401	W	102 x 24	SC	6	2.23	N/A	MH	YTT	DS
ME-402	W	48 x 24	SC	6	2.23	N/A	MH	YTT	DS
ME-403	W	102 x 24	SC	6	2.23	N/A	MH	YTT	DS
FCV-420	W	12 x 30	SC	6	2.51	N/A	E	YA	N/A

Notes:
a. C = channel, S = slide, W = weir
b. Nominal size of opening (aperture style gates) or channel width x slide height (channel and weir gates). See Drawings for additional dimensional requirements.
c. SC = self-contained, NSC = non self-contained
d. 1 = embedded frame/sill, 2 = wall mounted, 3 = upper section of frame wall mounted with sill and lower portion of frame embedded (e.g., sluice style gate mounted in channelized structure), 4 = flange mounted, 5= wall mounted with flush (embedded) bottom seal, 6= coordinate with the Welded Steel Tank Supplier per Section 43 40 04 to determine applicable frame mounting.
e. Design Head is the maximum water surface elevation minus the invert elevation of the gate.
f. MH = manual hand wheel, MFN = manual 2” floor nut, E = electric motor
g. YTT = yoke-mounted torque tube, SP = structure-mounted pedestal, YA = yoke-mounted actuator, WB = wall bracket
h. RB = radius bottom, DS = dual stem, EN = stainless steel enclosure.
i. The unseating head indicated would be an unusual condition resulting from a closed gate on a pressurized forcemain. For this condition, the gate would not need to seal the pipe to AWWA standards, but the gate would need to withstand the resulting force without damage to the gate or seals.

1.05 COMPONENT SIZING

A. Operating forces used for determining the strength of gate components (yokes, frames, slides, stems, slide nut pockets, and other load-bearing members) shall be based on the sum of the guide friction force (computed using an opening breakaway friction factor of 0.2) and the weight of slide and stem.

B. When the gate is in motion, the operating forces shall be based on the sum of the frictional force (using a guide friction factor of 0.25) and the weight of slide and stem.

1.06 PICKLING AND PASSIVATION OF STAINLESS STEEL

A. General:

1. Equipment specified under this section shall be cleaned, descaled and passivated in accordance with methods defined in ASTM A380 – Standard Practice for Cleaning, Descaling, and Passivation of Stainless Steel Parts, and the specific requirements of this section.
2. For purposes of this section, passivation is defined as the removal of exogenous iron or iron compounds from the surface of stainless steel by means of treatment with an acid solution that will remove the surface contamination but will not significantly affect the stainless steel itself.
3. The processes specified in this section shall be performed in an environmentally controlled shop with verifiable experience performing nitric-hydrofluoric acid solution pickling in compliance with all state and federal laws. The WWSS shall submit the name and qualifications of the passivation shop the equipment manufacturer is using in accordance with the submittal requirements of Section 01 33 00 prior to shipping parts for passivation.
4. Equipment components that bolt together shall be disassembled prior to passivation treatment to allow for effective circulation and removal of cleaning solutions.
5. All fasteners and anchor bolts required for assembly and mounting of equipment shall be batch processed at the passivation shop, then dried and sealed in plastic bags and labeled. Fasteners shall conform to the requirements of Section 43 05 11.
6. The use of “fabricator’s crayons” shall be prohibited during fabrication of equipment as these marks may prevent proper passivation.

B. Passivation Process Requirements:

1. The processes required for proper passivation shall include precleaning, chemical descaling, neutralization, post-cleaning inspection, testing, certification, and protection as defined below.
   a. Precleaning – Precleaning required for the removal of all grease, oil, paint, soil, grit and other gross contaminants preparatory to the fabrication process shall be accomplished by vapor degreasing, immersion or spray application of alkaline or emulsion cleaners, steam, or high pressure water jetting.
   b. Chemical Descaling –Chemical descaling (pickling) shall be accomplished by immersion bath or spray application of a nitric-hydrofluoric acid solution to produce a matt white, pristine appearance. The acid solution and process used shall conform to Code B, Table A1.1, ASTM A380.
   c. Neutralization – The chemical reactions of the pickling media shall be stopped by rinsing of the part with a 10 percent soda ash solution for a minimum of 30-minutes followed by a water bath using high pressure water jetting. The pH of the wetted part surface shall be same as the water used for rinsing.
   d. Post Cleaning Inspection – Post treatment inspection of the chemically pickled and neutralized part shall exhibit a clean surface with no signs of etching, pitting, or frosting resulting from the pickling procedure.

e. Testing – The passivated part shall be tested for the presence or absence of free iron with a solution of potassium ferricyanide as defined in Verification Test Practice E, ASTM A967. The test solution shall be mixed and used within 24-hours or less and applied with sterile cotton swabs. The test result shall indicate an absence of free iron on the surface of the part.

f. Certification – All parts passivated shall be certified by an officer of both the manufacturer and the passivating shop as having been cleaned and passivated and tested in accordance with the procedures described in this section. Test results shall indicate an absence of free iron on all passivated surfaces. Submit certification prior to shipping the equipment to the project site. Equipment that is not certified will not be accepted.

g. Protection – Protection shall be provided by applying shrink wrap to all parts of the equipment sufficient to prevent exposure of passivated surfaces to contaminants during handling, shipping and installation. Protected equipment shall be tagged with highly visible warning signs stating the equipment has been passivated and shall only be opened by authorized personnel. Equipment arriving at the project site without proper protection will require retesting for the presence of free iron and re-passivation if free iron is detected.

C. Assembly of equipment following passivation – If assembly of bolted parts is required following passivation, it shall be done at the manufacturing facility under clean conditions such that the parts will not be contaminated with exogenous iron or iron compounds. Following assembly, retest for the presence of free iron per ASTM A967 and treat any contaminated areas with citric acid solution. Equipment requiring assembly shall be re-shrink wrapped sufficient to prevent exposure of passivated surfaces to contaminants during handling, shipping and installation.

D. Witness of Passivation Process: The City retains the right to witness the stainless steel passivation process. Provide at least 30-days' notice prior to start of passivation process.

PART 2 PRODUCTS

2.01 ACCEPTABLE MANUFACTURERS

A. Gates shall be all stainless steel construction. Acceptable manufacturers include the following:
   1. Stainless steel slide gate manufacturers:
      a. Whipps, Inc. Athol, Massachusetts
      b. Golden Harvest, Inc, Burlington, WA
      c. Waterman Industries, Exeter California
      d. Or approved equal

B. The manufacturer's standard models or products may require modifications to conform to specified requirements.

2.02 MATERIALS

A. Materials of construction shall be as follows:

Component	Material
Slide	ASTM A240 Type 316L stainless steel
Frame	ASTM A276 Type 316L stainless steel
Slide Seats	ASTM D4020 UHMW Polyethylene
Seating faces or seals	ASTM D4020 UHMW PE
Stem and supports	ASTM A276 Type 316 stainless steel
Fasteners, adjusting hardware, and anchors	ASTM A276 Type 316 stainless steel
Yoke	ASTM A276 Type 316L stainless steel
Flush bottom seal	Resilient synthetic rubber bonded to frame or ASTM D2000 neoprene
Pedestal/Torque Tube	ASTM A276 Type 316L stainless steel
Enclosure	ASTM A276 Type 316L stainless steel

2.03 FEATURES

A. General:
1. Mounting requirements as shown on the Drawings and specified in this section.
2. Unless otherwise indicated, provide gates with rising stems with clear, graduated plastic covers in accordance with AWWA C561.
3. Weir gates having a width greater than 60 inches shall have dual stems mechanically linked to a common operator.
4. Stainless Steel Passivation: All stainless steel components to be cleaned, descaled, and passivated after fabrication in accordance with ASTM A380 and the specific requirements of this section.

B. Slide:
1. Slides shall consist of steel plate reinforced with steel members welded to the plate. Minimum thickness of the steel plate shall be ¼”.
2. Slides shall be reinforced with horizontal stiffeners welded to vertical stiffeners. Slides shall not deflect more than 1/1000 of the span of the gate under the design head.
3. Gates with an opening width x design head of 80’ or greater shall incorporate a 3” minimum structural edge extended into the guide grove or design equivalent.
4. The WWSS of behalf of the slide manufacturer shall submit drawings and comprehensive design criteria to substantiate that the maximum deflection for each slide has not exceeded 1/1000 of the span regardless of the type used. Comprehensive safety factor calculations shall include bending moments, buckling

stress, and bonding stress with thermal expansion factors. Safety factors shall be calculated for the slide under the maximum head indicated in this section, and for shear at the slide/seal interface.

C. Frame:
   1. Guide frames extending above operating floors or slabs shall be self-contained and sufficiently strong so that no further support or reinforcement is required. Frames for self-contained gates shall be designed for maximum loads imposed by gate operators in the stalled condition plus the weight of the slide, stem, torque tube or pedestal, and operator.
   2. The yoke shall be formed by two structural members welded at the top of the guides to provide a one-piece rigid frame and configured to enable slide removal without removing the yoke. The yoke shall be designed to support the maximum stall force applied by the operator in addition to the weight of the stem, torque tube or pedestal, and operator where this equipment is being supported at the yoke.
   3. The frame shall be designed with a minimum factor of safety of 4 with regard to ultimate tensile, compressive, and shear strength.
   4. Wall-mounted frames shall be the flanged type. Guides for wall mounted frames shall be formed from one plate with wrap around gussets. Bolted together guides are not accepted.
   5. Embedded frame gates shall be installed in block-out recesses formed in the channel walls and floor.

D. Seals:
   1. Gates shall incorporate factory-set self-adjusting seals utilizing a sealing surface of UHMW PE to achieve the leakage rates specified. Self-adjusting seals shall not require adjustment and shall be replaceable without removing the guide frame.
   2. All moving contact surfaces shall be incompatible to each other thereby minimizing sticking or jamming.

E. Stems:
   1. All stems shall be of the rising type unless otherwise specified.
   2. Provide stem diameter to withstand at least twice the rated output of the electric operator or the manual operator at 40-pounds pull. Stems shall be minimum 1-3/8-inch diameter.
   3. Stem guides shall be provided at intervals necessary to maintain a slenderness ratio (L/R) of the unsupported stem length of less than 200, where R is the radius of gyration of the stem.
   4. Stems shall be designed to withstand tensile and compressive loads that occur under maximum operating conditions. Design for compressive loading shall meet AISC code where K=1 with a minimum safety Factor of 2 to 1.
   5. Stem sections shall be joined together by solid couplings, threaded and keyed to the stems. All couplings of the same size shall be interchangeable.
   6. The threaded portion of the stem shall have dual lead, machine rolled, full depth ACME type threading with a 16 micro-inch finish or better. Stub threads are not acceptable.

7. Stems shall be fixed to the slide by a threaded and keyed assembly into a lifting nut attached to the disc in a lifting bracket, which is bolted to the disc. The bolts securing the bracket shall be in tension and not shear.
8. Yoke-supported stems shall be provided with a torque between the top of the yoke and the operator constructed of 316L SS. The torque tube shall have appropriate flanges at the top and bottom for mounting to the operator and yoke and be sized and constructed to provide lateral support to the stem between the yoke and the operator. Torque tubes shall be provided with UHMW stem guides at appropriate intervals to provide lateral support to the stem. Torque tubes shall be equipped with tabs for bolting lateral supports; the dimensions and location of the tabs shall be determined by the manufacturer and coordinated during the submittal review process.

F. Operators:
1. See Gate Schedule for operator requirements.
2. Unless otherwise indicated, manual operators shall meet requirements of AWWA C561 as appropriate.
3. Yoke-supported operators shall be provided with 316 SS pedestals between the top of the yoke and the operator. See drawings for length requirements.
4. Unless otherwise indicated and whenever possible, operator base shall be set 42” above the walking surface.
5. Manual operators are specified in Section 40 05 57.13.
6. Electric operators are specified in Section 40 05 57.23.

G. Enclosures (NOT USED)

H. Appurtenances: Frame welded flushing connections shall be provided at inverts of gate frames with flushing ports for 100 psig compressed air or 1000 psi high pressure water. Flushing connections shall be provided for gates 48-inches in height or taller. Tubing shall be a minimum of 1/4-inch diameter, Type 316L Stainless Steel. Tubing shall be integral with the frame and secured via permanently frame welded guides to prevent dislodgement. Both sides of the frame invert shall be provided with flushing connection. Penetration into the gate frame shall not interfere with gate operation. Penetration shall be performed at the manufacturer’s facility. Tubing on both sides of the frame shall terminate to a 1/2-inch diameter Type 316 stainless steel quick disconnect fitting, Snap-Tite/Parker series 71 or approved substitute. Fitting shall terminate just below floor invert. Manufacturer and WWSS shall coordinate location of quick disconnect valve box to avoid conflict with other valve boxes, equipment, etc.

2.04 FACTORY TESTING

A. Conduct shop performance test per AWWA C563 or AWWA C561 as applicable. Submit written report of results.

B. The Owner retains the right to witness the stainless steel preparation and passivation process. Provide at least 30-days’ notice prior to start of passivation process for gates and appurtenances.

PART 3 EXECUTION

3.01 INSTALLATION

A. Install gates and appurtenances in accordance with the WWSS and manufacturer's instruction and as shown on the Drawings.

B. For embedded gates, fill blockouts along guide frames and gate sill with grout following installation.

C. Provide all 316 SS anchors; size anchors in accordance with the design requirements specified in this section and in accordance with Sections 01 73 24, 05 10 00, and 43 05 11.

D. Proper handling shall incorporate all practices described in Section 8.5 – Protection of Cleaned Surfaces, ASTM A380. Passivated parts contaminated due to improper handling and installation will require retesting for the presence of free iron and re-passivation if free iron is detected.

3.02 FIELD TESTING

A. Operation and Leakage Tests: In accordance with AWWA C563 or AWWA C 561 as appropriate.

B. Leakage rates shall not exceed 0.05 gpm per linear foot of seating perimeter.

END OF SECTION

THIS PAGE INTENTIONALLY LEFT BLANK

SECTION 40 05 60
VALVES

PART 1 GENERAL

1.01 SUMMARY

A. This Section specifies requirements including supply, installation and testing of valves.

B. Determining Valve Type:
   1. Drawings (P&IDs and Mechanical Drawings) indicate valve types (gate, plug, butterfly, check, globe, etc.) used in each pipeline. Process fluids that will be conveyed in pipelines are identified by the Process Service Identifiers shown on the Drawings.

C. Section 40 06 20.13 specifies electric, and pneumatic powered control valves, complete with valve, actuator, and other ancillaries.

1.02 RELATED SECTIONS

A. This section contains specific references to the following related sections. Additional related sections may apply that are not specifically listed below.
   1. Section 01 33 00 – Submittal Procedures
   2. Section 01 61 00 – Common Product Requirements
   3. Section 01 78 23 – Operating and Maintenance Data
   4. Section 40 05 01 – Piping Systems

1.03 REFERENCES

A. This section contains references to the following documents. They are a part of this section as specified and modified. Where a referenced document contains references to other standards, those documents are included as references under this section as if referenced directly. In the event of conflict between the requirements of this section and those of the listed documents, the requirements of this section shall prevail.

B. Unless otherwise specified, references to documents shall mean the documents in effect at the time of Advertisement for Bids or Invitation to Bid (or on the effective date of the Agreement if there were no Bids). If referenced documents have been discontinued by the issuing organization, references to those documents shall mean the replacement documents issued or otherwise identified by that organization or, if there are no replacement documents, the last version of the document before it was discontinued. Where document dates are given in the following listing, references to those documents shall mean the specific document version associated with that date, regardless of whether the document has been superseded by a version with a later date, discontinued or replaced.

Reference	Title
ANSI B1.20.1	Pipe Threads, General Purpose

Reference	Title
ASME B16.1	Cast Iron Pipe Flanges and Flanged Fittings Class 25, 125, and 250
ASME B16.5	Pipe Flanges and Flanged Fittings
ASME B 16.10	Face-to-Face and End-to-End Dimensions of Valves
ASME B16.34	Valves—Flanged, Threaded, and Welding End
API 607	Fire Test for Quarter-turn Valves and Valves Equipped with Nonmetallic Seats
ASTM A48	Gray Iron Castings
ASTM A108	Steel Bars, Carbon, Cold-Finished, Standard Quality
ASTM A126	Gray Iron Castings for Valves, Flanges, and Pipe Fittings
ASTM A216/A216M	Steel Castings, Carbon, Suitable for Fusion Welding, for High Temperature Service
ASTM A276	Stainless and Heat Resisting Steel Bars and Shapes
ASTM A351	Castings, Austenitic, for Pressure-Containing Parts
ASTM A516	Pressure Vessel Plates, Carbon Steel, for Moderate- and Lower-Temperature Service
ASTM A536	Ductile Iron Castings
ASTM A571	Austenitic Ductile Iron Castings
ASTM A995/A995M-13	Castings, Austenitic-Ferritic (Duplex) Stainless Steel, for Pressure-Containing Parts
ASTM B124	Copper and Copper Alloy Forging Rod, Bar, and Shapes
ASTM B148	Aluminum-Bronze Sand Castings
ASTM C283	Resistance of Porcelain Enameled Utensils to Boiling Acid
ASTM D1784	Rigid Poly (Vinyl Chloride) (PVC) Compounds and Chlorinated Poly(Vinyl Chloride) (CPVC) Compounds
ASTM D5162	Discontinuity (Holiday) Testing of Nonconductive Protective Coating on Metallic Substrates
AWWA C500	Metal-Seated Gate Valves for Water Supply Service
AWWA C504	Rubber-Seated Butterfly Valves
AWWA C507	Standard for Ball Valves
AWWA C508	Swing Check Valves for Waterworks Service, 2 – 24 Inches NPS
AWWA C517	Resilient-Seated Cast Iron Eccentric Plug Valves
AWWA C550	Protective Interior Coatings for Valves and Hydrants
MSS SP-70	Gray Iron Gate Valves, Flanged and Threaded Ends
MSS SP-80	Bronze Gate, Globe, Angle and Check Valves
MSS SP-81	Stainless Steel, Bonnetless, Flanged, Knife Gate Valves
MSS SP-110	Ball Valves Threaded, Socket-Welding, Solder Joint, Grooved and Flared Ends
NSF 61	Drinking Water System Components - Health Effects
UL 429	Electrically Operated Valves
UL 1002	Electrically Operated Valves for Use in Hazardous Locations, Class I, Groups A, B, C, and D, and Class II, Groups E, F, and G

1.04 SUBMITTALS

A. Action Submittals:
   1. Procedures: Section 01 33 00
   2. A copy of this Section, addendum updates included, with each paragraph check-marked to indicate compliance or marked to indicate requested deviations from specification requirements. Check-marks (ü) denote full compliance with a paragraph as a whole. Underline deviations and denote with a number in the margin to the right of the identified paragraph. The remaining portions of the paragraph not underlined signify compliance on the part of the Contractor with the specifications. Include a detailed, written justification for each deviation. Failure to include a copy of the marked-up specification sections, along with justification(s) for any requested deviations to the specification requirements, with the submittal will be sufficient cause for rejection of the entire submittal with no further consideration.
   3. Catalog cuts and/or shop drawings for each type of valve indicating the valve type (Detailed Valve Specification Section Number), materials of construction, dimensions, operating torque, valve end connection configuration, pressure rating, and operating temperature range.
   4. An amended Detailed Valve Specification for all valve types provided for this contract. Indicate with check marks where the valve supplied meets the requirements specified and with written amendments where the product differs from the specification.
   5. Factory Acceptance Test results and/or Certified Statement of Proof-of-Design testing results when specified in Detailed Valve Specifications.
   6. Action Submittal Items listed on Detailed Valve Specifications

B. Informational Submittals:
   1. Affidavits and registration numbers as specified.
   2. Operating and Maintenance data for incorporation in operation and maintenance manual, as specified in Section 01 78 23. Include complete description of operation together with detailed drawings, a complete list of replacement and repair parts, and parts manufacturer's identifying numbers.

1.05 DELIVERY, STORAGE, AND HANDLING

A. Procedures: Section 01 61 00.

B. Deliver valves to site in accordance with Section 01 61 00 and using loading methods which do not damage any valve components or coatings.

C. Tag loose valves as specified in Section 01 61 00, stating size, type, coatings and mating parts shipped loose or separate.

D. Store on site until ready for incorporation in the work using methods recommended by the manufacturer to prevent damage, undue stresses, or weathering.

PART 2 PRODUCTS

2.01 VALVE TYPES

A. Valve types for various services shall be per table below.

Process Service Identifier	Process Service	Valve Type	Valve Specification
AOHD	Acetic Acid	Ball	40 05 63.53
AMM	Liquid Ammonium Sulfate	Ball	40 05 63.06
AS	Antiscalant	Ball	40 05 63.06
BACE	BAC Filtrate	Butterfly	40 05 64
BACF	BAC Feed	Butterfly	40 05 64
BPE	Blended Primary Effluent	Plug	40 05 62.16
CS	Caustic Soda	Ball	40 05 63.06
DR	Drain	Plug	40 05 62.16
IA	Instrument Air	Ball	40 05 63.03
IMLR	Internal Mixed Liquor Return	Plug	40 05 62.16
MBRAS	Membrane Bioreactor Air Scour	Butterfly	40 05 64
MBRE	Membrane Bioreactor Effluent	Butterfly	40 05 64
MBRF	Membrane Bioreactor Feed	Plug	40 05 62.16
MBRPFC	Preformed Chloramines to MBR	Ball	40 05 63.06
MCCROC	CCRO Concentrate	Butterfly	40 05 64
MCCROF	CRRO Feed	Butterfly	40 05 64
MCCROP	CCRO Permeate	Ball	40 05 63.06
MCOMBP	Murray Combined RO Permeate Diversion to RO Flush Tank	Ball	40 05 63.06
MFAS	Membrane Filtration Air Scour	Butterfly	40 05 64
MFE	Membrane Filtration Effluent	Ball	40 05 63.06
MFF	Membrane Filtration Feed	Butterfly	40 05 64
MFRROC	FRRO Concentrate	Butterfly	40 05 64
MFRROF	FRRO Feed	Butterfly	40 05 64
MFRROP	FRRO Permeate	Ball	40 05 63.06
ML	Mixed Liquor	Plug	40 05 62.16
MPFC	Preformed Chloramines to Murray MF Feed	Ball	40 05 63.06
MROC	Murray 3-Stage RO Concentrate	Butterfly	40 05 64
MROF	Murray 3-Stage RO Feed	Butterfly	40 05 64
MROP	Murray 3-Stage RO Permeate	Ball	40 05 63.06

Process Service Identifier	Process Service	Valve Type	Valve Specification
MUVF	Murray UV/AOP Feed	Butterfly	40 05 64
OCE	Ozone Contactor Effluent	Ball	40 05 63.03
OCF	Ozone Contactor Feed	Ball	40 05 63.03
ODIE	Ozone Direct Injection Effluent	Ball	40 05 63.03
ODIF	Ozone Direct Injection Feed	Ball	40 05 63.03
OFBE	Ozone Fine Bubble Diffuser Effluent	Ball	40 05 63.03
OFBF	Ozone Fine Bubble Diffuser Feed	Ball	40 05 63.03
PA	Plant Air	Butterfly	40 05 64
PE	Primary Effluent	Butterfly	40 05 64
PI	Primary Influent	Butterfly	40 05 64
PW	Potable Water (City water)	Ball	40 05 63.09
RAS	Return Activated Sludge	Plug	40 05 62.16
SBS	Sodium Bisulfite	Ball	40 05 63.06
SHC	Sodium Hypochlorite	Vented Ball	40 05 63.06
SOA	Sulfuric Acid	Ball	40 05 63.53
SVPFC	Preformed Chloramines to SV RO Feed	Ball	40 05 63.06
SVROBACF	BAC Filtrate Diversion to San Vicente 3-Stage RO Feed	Butterfly	40 05 64
SVROC	San Vicente 3-Stage RO Concentrate	Butterfly	40 05 64
SVROF	San Vicente 3-Stage RO Feed	Butterfly	40 05 64
SVROP	San Vicente 3-Stage RO Permeate	Ball	40 05 63.06
SVUVF	San Vicente UV/AOP Feed	Butterfly	40 05 64
UVE	Combined UV/AOP Effluent to Drain	Ball	40 05 63.06
UW1	Potable Water (City water)	Ball	40 05 63.06
UW2	Spray Water	Ball	40 05 63.06
WAS	Waste Activated Sludge	Plug	40 05 62.16

2.02 VALVE CONFIGURATION REQUIREMENTS

A. General:
   1. Provide valves of the same type, size range and service from a single manufacturer.
   2. Provide new, unused valves for the work.
   3. Provide valve materials free from defects or flaws, with true alignment and bores.

4. Provide valves that open by turning the valve shaft to rotate counter-clockwise unless otherwise specified in the Detailed Valve Specification Section.

B. Provide padlockable lockout feature on all valves.

C. Manual Operators:
1. Provide valves with manual operators as specified in the Detailed Valve Specification, unless specified otherwise in Section 40 06 20.13.
2. For hand wheels, clearly show the direction of opening in raised lettering and symbols.
3. The maximum rim pull on a hand wheel is not to exceed 65 lb. when one side of the valve is at test pressure and the other side is at atmospheric pressure. Where a shaft mounted hand wheel would require greater force to operate, provide a torque reduction gearbox operator. Unless different operators are scheduled or specified on the Drawings, conform to the following minimum requirements.
4. Provide 6 (total) eight-point operating wrenches for use on all valves with square nut operators. At least two shall be adjustable T-handle type for accessing valves beneath trench grating. Provide banded opening above each valve nut beneath grating for access from the operating floor.
5. Quarter turn lever operators are to be perpendicular to the pipe runs when the valves are closed.
6. Provide butterfly valves 2-inches and below with 10 position latching levers except where used to balance air flows. Where used to balance air flows provide infinite position, screw down levers.
7. The maximum pull at the end of the lever arm is not to exceed 65 lb. when one side of the valve is at test pressure and other side is at atmospheric pressure. Where greater force would be required to operate the valve with a lever, provide a torque reduction gearbox operator.
8. Provide grease lubricated, worm gear type operators for torque reduction gearbox operators for all valves over 2-inches. Gearbox operators equipped with a hand wheel and a visual indicator of the valve position. Provide gear operators with adjustable mechanical stop-limiting devices to prevent over travel of the disc/ball/plug in the open and closed positions and which are self-locking and designed to hold the valve in any intermediate position between full open and full closed. Where gearbox operators are intended for direct bury or submergence, seal units with long life lubricant.
9. For manual valves on lines 3 inches and greater, mounted over 7.0 feet above the operating floor, provide chain wheel gear operators. Design chain wheel operators so that a force of 30 lb. is sufficient to open the valve when one side of the valve is at test pressure and the other side is at atmospheric pressure. Provide chain pulley that positively engages the chain links. The chain will extend from the valve operator to an operating height of 4 feet above the floor or as directed by the CITY. The exact dimensions will be field determined. Provide approved chain hooks where required to prevent chain from hanging within traffic paths.
10. Where manual operators are installed over 7.0 feet above the operating floor and the Drawings specify a vertical valve shaft, revise the gear operator and/or chain

wheel position to provide a horizontal chain wheel shaft. Retain the valve orientation specified on the Drawings.

11. Provide ductile iron chain wheels. Provide galvanized steel operating chains.

D. Valve Stem Extensions and Wrench Nuts – NOT USED.

E. Operator Appurtenances – NOT USED.

2.03 VALVE IDENTIFICATION TAGS

A. Provide valve identification tags for all valves with an identification tag number on the drawings (Mechanical and PI&D drawings).

B. Match tag numbers shown on the drawings.

C. Type 316 stainless steel tags, minimum 2.5-inches x 0.75 inches, with 0.1875 inch numbers and letters. Complete tag number shall be embossed on the tag. Tags shall be attached using stainless steel wire.

PART 3 EXECUTION

3.01 PREPARATION

A. The valve and piping arrangement indicated on the Drawings is based on typical dimensions for valves of the specified type. Make the necessary modifications in the piping to allow for discrepancies between the valve dimensions shown and those supplied for the Work.

B. Prior to installation of valves, field measure and check all equipment locations, pipe alignments, and structural installations. Ensure that the valve location and orientation provide suitable access to manual operators and that sufficient space and accessibility is available for hydraulic, pneumatic, and electric power actuators.

C. Where conflicts are identified, inform the Engineer.

3.02 INSTALLATION

A. Install valves in conjunction with the piping specified in the Piping System, and with control valves and their appurtenances specified in Section 40 06 20.13.

B. In horizontal pipe runs, other than in locations where space does not permit, install all valves (except for butterfly valves, eccentric plug valves, and trunnion ball valves) with a vertical operating shaft with the actuator at the top. In no case install a valve with the operator below the valve.

C. Unless otherwise specified on the drawings, install butterfly valves, eccentric plug valves, and trunnion ball valves with the shaft in a horizontal orientation. Install eccentric plug valves with the plug above the valve shaft centreline when the valve is full open.

D. When joining valves to pipe or fittings, do not over torque bolts to correct for misalignment.

E. Support valves in position using temporary supports until valves are fixed in place.

F. Permanently support valves to prevent transmission of loads to adjacent pipework and/or equipment.

G. Where valves are installed in plastic pipelines (PVC, CPVC, HDPE, polypropylene etc.) greater than 4-inch diameter, support valves independent of the piping and brace valves against operating loads and torque to prevent transmission of stresses to the adjacent pipework.

H. Install gate valves in the closed position.

I. Install valves which are bubble tight in one direction to provide bubble tight seal of flow in normal direction of flow unless otherwise noted or directed by the City.

J. Unless otherwise specified, install single seated valves with the seat downstream. Install valves at tank connections with seat away from tank. Install valves on pump discharge and suction lines with seat end towards the pump.

K. Install all valves in accordance with the manufacturer's recommendations.

L. Protect valves installed below grade with a shrink sleeve or polyethylene sheath attached to the pipe with tape wrap.

M. Wrench nuts shall be provided on buried valves, on valves which are to be operated through floor boxes, and where specified. Extended wrench nuts shall be provided if necessary, so that the nut will be within 6 inches of the valve box cover.

3.03 FIELD QUALITY CONTROL

A. Field or Site Tests and Inspect per project Quality Control requirements.

B. Pressure test all valves in conjunction with the pipes in which the valves are installed.

END OF SECTION

SECTION 40 05 62.16
ECCENTRIC PLUG VALVES FOR LIQUID SERVICE

PART 1 GENERAL

1.01 DESCRIPTION

A. This section specifies eccentric plug valves.

1.02 QUALITY ASSURANCE

A. References:

1. This section contains references to the following documents. They are a part of this section as specified and modified. Where a referenced document contains references to other standards, those documents are included as references under this section as if referenced directly. In the event of conflict between the requirements of this section and those of the listed documents, the requirements of this section shall prevail.
2. Unless otherwise specified, references to documents shall mean the documents in effect at the time of Advertisement for Bids or Invitation to Bid (or on the effective date of the Agreement if there were no Bids). If referenced documents have been discontinued by the issuing organization, references to those documents shall mean the replacement documents issued or otherwise identified by that organization or, if there are no replacement documents, the last version of the document before it was discontinued. Where document dates are given in the following listing, references to those documents shall mean the specific document version associated with that date, regardless of whether the document has been superseded by a version with a later date, discontinued or replaced.

Reference	Title
ASME B16.1	Cast Iron Pipe Flanges and Flanged Fittings Class 25, 125, 250, and 800
ASTM A126	Gray Iron Castings for Valves, Flanges, and Pipe Fittings
ASTM A276	Stainless and Heat-Resisting Steel Bars and Shapes
ASTM A436	Austenitic Gray Iron Castings
ASTM A536	Ductile Iron Castings
AWWA C504	Rubber Seated Butterfly Valves

B. Proof of Design Tests:

1. The Contractor shall furnish the Engineer three certified copies of a report from an independent testing laboratory certifying successful completion of proof-of-design testing conducted in accordance with AWWA C504, Section 5.2, except that where the word "disc" appears in the standard, it is understood to mean "plug." In lieu of testing the valves at an independent testing laboratory, proof-of-design testing may be performed at the valve manufacturer's laboratory, but must be witnessed by a representative of a qualified independent testing laboratory, and all test reports must be certified by the laboratory representative. Proof-of-design testing shall have been performed on not less than three 6-inch diameter

valves, with all three test units demonstrating full compliance with the test standards. Failure to satisfactorily complete the test shall be deemed sufficient evidence to reject all valves of the proposed make or manufacturer's model number.

PART 2 PRODUCTS

2.01 MATERIALS

A. Materials of construction shall be as follows:

Component	Material
Body	Cast iron, ASTM A126, Class B
Plug	Cast iron, ASTM A126, Class B, or cast iron ASTM A436 (Ni-resist), or ductile iron, ASTM A536
Plug facing	Neoprene or Buna-N
Body seats	
• Less than 3 inches	Cast iron, ASTM A126, Class B
• 3 inches and larger	Stainless steel, ASTM A276, Type 304 or nickel
Packing	Buna V-flex or TFE

B. Materials specified are considered the minimum acceptable for the purposes of durability, strength, and resistance to erosion and corrosion. The Contractor may propose alternative materials for the purpose of providing greater strength or to meet required stress limitations. However, alternative materials must provide at least the same qualities as those specified for the purpose.

2.02 MANUFACTURE

A. General:

1. Valves shall be straight-flow nonlubricated resilient plug type suitable for driptight, bi-directional shutoff at the specified valve design pressure. Port areas for the valve shall be at least 80 percent of the adjacent full pipe area and shall be capable of passing solids 2-inches of pipe size. Valve body seats consisting of nickel for valves 3 inches and larger shall be constructed of a welded-in overlay of not less than 90 percent pure nickel. Upper and lower journal bearings shall be replaceable, sleeve-type, corrosion resistant, and permanently lubricated. Packing shall be self-adjusting chevron type replaceable without disassembling the valve.
2. Unless otherwise specified, valves shall, as a minimum, conform to the following pressure ratings:

Size, inches	Design pressure, psig
12 and smaller	175
14 through 36	150

B. End Connections:
   1. Valves 3 inches and smaller shall have threaded ends. Valve flange drilling for valves larger than 3 inches shall be per ASME B16.1, Class 125. Grooved-end valves may be provided with grooved-end piping systems.

C. Manual Operators:
   1. Unless otherwise specified, valves 4 inches and smaller shall be provided with a lever type manual operator. Valves larger than 4 inches shall be provided with totally enclosed worm gear operators. Where specified, manual operators shall have an adjustable stop. All operator components shall be sized for the valve design pressure in accordance with AWWA C504, Section 4.5. Operators shall comply with applicable portions of Section 40 05 57.13.

2.03 PRODUCT DATA

A. The following information shall be provided in accordance with Section 01 33 00:
   1. Manufacturer's product data.
   2. Proof-of-design test reports specified in paragraph 1.02 Proof of Design Tests.

PART 3 EXECUTION

3.01 INSTALLATION

A. Unless otherwise specified, valves shall be provided with the seat downstream away from flow. Valves at tank connections shall be installed with seat away from tank. Valves on pump discharge lines shall be installed with seat adjacent to the pump.

END OF SECTION

THIS PAGE INTENTIONALLY LEFT BLANK

40 05 63.03

STAINLESS STEEL THREADED BALL VALVES

PART 1 GENERAL

1.01 GENERAL

A. Line Size: ¼ through 3 inches

B. Rated Limits: Pressure 800 psi; Temperature 100 °F (WOG)

1.02 VALVE MATERIALS

A. Body: Stainless Steel 316

B. Ball: Stainless Steel 316

C. Seats: PTFE

D. Packing: RPTFE

E. Stem: Stainless Steel 316; blowout-proof stem

1.03 VALVE CONFIGURATION

A. Valve End/Connections: Threaded, Female

B. Pattern: Compact, Regular Port

C. Ball Mount: Floating

D. Manual Operator: Lever/Handwheel

1.04 SUBMITTALS

A. Action Submittals: Data sheet, dimensional drawings, and materials of construction

B. Information Submittals: None

C. Closeout Submittals: None

1.05 CANDIDATE MANUFACTURERS

A. Apollo 76J-100

B. Elite E1500

C. Nibco T-580 (up to 2”)

D. Or approved equal

PART 2 PRODUCTS – NOT USED

PART 3 EXECUTION – NOT USED

END OF SECTION

40 05 63.06
PVC BALL VALVES

PART 1 GENERAL

1.01 GENERAL

A. Line Size: ½ through 4 inches

B. Rated Limits: Pressure 130 psi; Temperature 140 °F

1.02 VALVE MATERIALS

A. Body: PVC; ASTM D1784 (Grade A)

B. Ball: PVC; ASTM D1784 (Grade A)

C. O-Rings: EPDM or FKM

D. Seats: PTFE

E. Shafts: PVC; ASTM D1784 (Grade A), blowout-proof ball and stem

1.03 VALVE CONFIGURATION

A. Valve End/Connections: Threaded, Female, True Union; ASTM D2464

B. Pattern: Full Port; bi-directional

C. Ball Mount: Floating

D. Manual Operator: Lever

E. Valves for sodium hypochlorite application shall be vented ball valves. No field drilling of balls for venting shall be allowed. Vents shall face the process stream when isolated.

1.04 SUBMITTALS

A. Action Submittals: Data sheet, dimensional drawing, and materials of construction

B. Information Submittals: None.

C. Closeout Submittals: None.

1.05 CANDIDATE MANUFACTURERS

A. IPEX VXE/VKD

B. Hayward Series TB

C. Chemtrol Type 21

D. Spears Manufacturing

E. Georg Fischer

F. Or approved equal

PART 2 PRODUCTS – NOT USED

PART 3 EXECUTION – NOT USED

END OF SECTION

40 05 63.08
STAINLESS STEEL FLANGED BALL VALVES

PART 1 GENERAL

1.01 GENERAL

A. Line Size: 2 through 24 inches

B. Rated Limits: Pressure 170 psi; Temperature 120 °F

1.02 VALVE MATERIALS

A. Body: Stainless Steel 316

B. Ball: Stainless Steel 316

C. Seats: PTFE

D. Packing: RPTFE

E. Stem: Stainless Steel 316; blowout-proof stem

1.03 VALVE CONFIGURATION

A. Valve End/Connections: Flange, ASME 16.1 Class 150

B. Pattern: Full Port, Split Body

C. Ball Mount: provide trunnion-mounted ball on all valves sizes 8 inches and greater, provide floating ball on all valves sizes 6 inches and smaller

D. Manual Operator: Lever/Handwheel; provide lever operators for valves 4 inches and less, provide geared operators for valves 6 inches and greater

1.04 SUBMITTALS

A. Action Submittals: Data sheets, dimensional drawings, flange details (where applicable) and material of construction

B. Information Submittals: None.

C. Closeout Submittals: None.

1.05 CANDIDATE MANUFACTURERS

A. Kitz 150UTDZM Up to 10”

B. Velan SB-150

C. Elite E9200 Up to 12”

D. Or approved equal

PART 2 PRODUCTS – NOT USED

PART 3 EXECUTION – NOT USED

END OF SECTION

40 05 63.09
STEEL BALL VALVES

PART 1 GENERAL

1.01 GENERAL

A. Line Size: ½ through 12 inches

B. Rated Limits: Pressure 250 psi; Temperature 150 °F

1.02 VALVE MATERIALS

A. Body: Steel

B. Ball: Stainless Steel 316

C. Seats: PTFE

D. Packing: RPTFE

E. Stem: Stainless Steel 316; blowout-proof stem

1.03 VALVE CONFIGURATION

A. Valve End/Connections:
   1. ½ - 2 inches: Threaded
   2. 3 to 12 inches: Flange, ASME B16.1 Class 150# or as specified or shown on Drawings

B. Pattern: Full Port

C. Ball Mount: provide trunnion-mounted ball on all valves sizes 10 inches and greater, provide floating ball on all valves sizes 8 inches and smaller

D. Manual Operator: Lever/Handwheel; provide lever operators for valves 4 inches and less, provide geared operators for valves 6 inches and greater

1.04 SUBMITTALS

A. Action Submittals: Data sheets, dimensional drawings, and materials of construction

B. Information Submittals: None.

C. Closeout Submittals: None.

1.05 CANDIDATE MANUFACTURERS

A. Kitz 150SCTDZM

B. Bray Flow-Tek F15

C. Metso Jamesbury 9150

D. Or approved equal

PART 2 PRODUCTS – NOT USED

PART 3 EXECUTION – NOT USED

END OF SECTION

40 05 63.53
PVDF BALL VALVES

PART 1 GENERAL

1.01 GENERAL

A. Line Size: 1/2 through 2 inches

B. Rated Limits: Pressure 230 psi; Temperature 70 °F

1.02 VALVE MATERIALS

A. Body: PVDF (ASTM D3222 Cell Classification Type II)

B. Ball: PVDF (ASTM D3222 Cell Classification Type II)

C. Seats: FKM

D. Seals: FKM

E. Stem: PVDF (ASTM D3222 Cell Classification Type II)

1.03 VALVE CONFIGURATION

A. Valve End/Connections: Butt/spigot

B. Pattern: Full bore; double o-ring seals on stem

C. Body: True union design

D. Manual Operator: Lever

1.04 SUBMITTALS

A. Action Submittals: Data sheets, dimensional drawings, flange details (where applicable) and material of construction

B. Information Submittals: None.

C. Closeout Submittals: None.

1.05 CANDIDATE MANUFACTURERS

A. Asahi Type 21/21A

B. Or approved equal

PART 2 PRODUCTS – NOT USED

PART 3 EXECUTION – NOT USED

END OF SECTION

SECTION 40 05 64
BUTTERFLY VALVES

PART 1 GENERAL

1.01 DESCRIPTION

A. Scope:
   1. This section specifies butterfly valves for air, gas, steam and water service.
      a. Type A: Valves used in the following piping systems for sizes 3 inches and larger shall be designated Type A. Where 2-1/2-inch valves are specified, substitute Type B.
         1) All applications other than listed for Type B, C and D
      b. Type B: Valves used in the following piping systems shall be designated Type B:
         1) Process air (PA)
      c. Type C: Valves used in the following piping system shall be designated Type C: Not Used.
      d. Type D: Valves used in the following piping systems shall be designated Type D: As required on chemical systems

1.02 REFERENCES

A. This section contains references to the following documents. They are a part of this section as specified and modified. Where a referenced document contains references to other standards, those documents are included as references under this section as if referenced directly. In the event of conflict between the requirements of this section and those of the listed documents, the requirements of this section shall prevail.

B. Unless otherwise specified, references to documents shall mean the documents in effect at the time of Advertisement for Bids or Invitation to Bid (or on the effective date of the Agreement if there were no Bids). If referenced documents have been discontinued by the issuing organization, references to those documents shall mean the replacement documents issued or otherwise identified by that organization or, if there are no replacement documents, the last version of the document before it was discontinued. Where document dates are given in the following listing, references to those documents shall mean the specific document version associated with that date, regardless of whether the document has been superseded by a version with a later date, discontinued or replaced.

Reference	Title
ASME B16.1	Cast Iron Pipe Flanges and Flanged Fittings Class 25, 125, 250 and 800
ASME B16.5	Pipe Flanges and Flanged Fittings
ASTM A48	Gray Iron Castings
ASTM A108	Steel Bars, Carbon, Cold-Finished, Standard Quality

Reference	Title
ASTM A126	Gray Iron Castings for Valves, Flanges, and Pipe Fittings
ASTM A216/A216M	Steel Castings, Carbon, Suitable for Fusion Welding, for High Temperature Service
ASTM A276	Stainless and Heat-Resisting Steel Bars and Shapes
ASTM A436	Austenitic Gray Iron Castings
ASTM A536	Ductile Iron Castings
AWWA C504	Rubber-Seated Butterfly Valves

PART 2 PRODUCTS

2.01 MATERIALS

A. Type A:
   1. Type A valves are specified according to size as follows:
      a. Type A, Size 3 Through 24 Inches: Type A valves from 3 through 24 inches in size shall be constructed of the following materials unless otherwise specified:

Component	Material
Shaft	Stainless steel, ASTM A276, Type 316
Disc	Ductile iron, ASTM A536
Seat mating surface	Stainless steel, ASTM A276, Type 316, mounted in body or on disc edge; or Ni-Chrome on the disc edge
Seat sealing surface	Neoprene, EPDM or Buna N
Body	Cast iron, ASTM A126, Class B or Ductile Iron A536

   2. Provide insulating joints at dissimilar metal joints.

B. Type B:
   1. Type B valves shall be constructed of the following materials unless otherwise specified:

Component	Material
Shaft	Stainless steel, ASTM A582, Type 416
Disc	Cast iron, ASTM A126, Class B
Seat sealing surface	Neoprene or Buna N--air and gas services
Body	Cast iron, ASTM A126, Class B
Disc edge	Nickel

C. Type C:
   1. Type C valves shall be constructed of the following materials:

Component	Material
Shaft	Stainless steel, ASTM A276, Type 316
Disc	Carbon steel, ASTM A216
Seat sealing surface	Teflon
Disc edge	Nickel
Body	Carbon steel, ASTM A216

D. Type D:
   1. Type D valves shall be constructed of the following materials:

Component	Material
Shaft	Stainless steel, ASTM A276, Type 304
Disc	Polypropylene
Seat	EPT
Body	Rigid polyvinylchloride (PVC)

2.02 CONSTRUCTION

A. General: Valves shall be the stub or through shaft design. Wafer type valves are not acceptable for buried service. Unless otherwise specified, valve flange drilling shall be per ASME B16.1, Class 125.

B. Type A:
   1. Type A valves shall be designed in accordance with AWWA C504. Shafts shall be turned, ground and polished. Shaft dimensions and operator torque shall be chosen for the pressure specified in Section 40 05 01 and Class B as specified in AWWA C504. When carbon steel shafts and stainless steel journals are used, static seals shall be provided to isolate the interior of the disc and the shaft from the process fluid.
   2. Type A valves, size 3 through 24 inches, shall have seats that are vulcanized, bonded, mechanically secured, or clamped to the body or disc.

C. Type B:
   1. Valves shall be rated at 175 psig and provide driptight shutoff up to the full valve rating on dead-end or isolation service. Seat shall be mechanically held in place and shall be field replaceable. Valve ends shall be as specified in Section 40 05 01.
   2. Type B valves, size 2 through 20 inches, shall have seats that are bonded to a rigid reinforcing ring.

D. Type C (Size 2 Through 20 Inches):
   1. Type C valves shall be high-pressure, high-temperature, corrosion-resistant valves capable of providing driptight shutoff to 225 psig and operating at 300 degrees F temperature. Valves shall be wafer or single-flange lugged design compatible for use with flanges to ASME B16.5, Class 150.

2. Type C valves shall have seats that are pressure energized to assure positive shutoff. Seat shall seal effectively with flow in either direction.

E. Type D: Valves shall have a molded PVC body. The disc shall be polypropylene with an encapsulated metal reinforcing insert. The liner shall be neoprene which serves as the flange gasket.

2.03 MANUAL OPERATORS

A. General: Manual operators shall be designed in accordance with AWWA C504 and shall have a disc position indicator designating the opened and closed position of the valve.

B. Type A:
1. Manual operators for Type A valves shall be of the traveling nut, rack and pinion, or worm gear type. Operators shall be equipped with adjustable mechanical stop-limiting devices to prevent overtravel of the disc in the open and closed positions and shall be self-locking and designed to hold the valve in any intermediate position between full open and full closed. Valve operator components shall withstand an input torque of 300 ft-lbs at the extreme operator positions without damage.
2. Operator for buried service shall include an AWWA operating nut and shall be gasketed and grease packed for submerged operation at water pressures to 10 psig. Operators for exposed service shall include a handwheel and be gasketed for weatherproof service.

C. Types B, C, and D:
1. Operators for Type B, Type C, and Type D valves 6 inches in diameter and smaller shall be latch lock levers. Valves shall be capable of being locked in at least five intermediate positions between fully open and fully closed.
2. Operators for Type B and Type C valves 8 inches in diameter and larger shall be the traveling nut or worm gear Type. Operators for exposed service shall be gasketed for weatherproof service. A handwheel or chain wheel shall be provided for each operator as required in Section 40 05 57.13.

2.04 PRODUCT DATA

A. Affidavits of compliance with AWWA C504 for Type A valves shall be provided in accordance with Section 01 33 00.

PART 3 EXECUTION

3.01 INSTALLATION

A. Valves shall be installed in accordance with the manufacturer's recommendations.

END OF SECTION

SECTION 40 05 65.23
SWING CHECK VALVES

PART 1 GENERAL

1.01 DESCRIPTION

A. This section specifies spring-loaded swing check valves.

1.02 REFERENCES

A. This section contains references to the following documents. They are a part of this section as specified and modified. Where a referenced document contains references to other standards, those documents are included as references under this section as if referenced directly. In the event of conflict between the requirements of this section and those of the listed documents, the requirements of this section shall prevail.

B. Unless otherwise specified, references to documents shall mean the documents in effect at the time of Advertisement for Bids or Invitation to Bid (or on the effective date of the Agreement if there were no Bids). If referenced documents have been discontinued by the issuing organization, references to those documents shall mean the replacement documents issued or otherwise identified by that organization or, if there are no replacement documents, the last version of the document before it was discontinued. Where document dates are given in the following listing, references to those documents shall mean the specific document version associated with that date, regardless of whether the document has been superseded by a version with a later date, discontinued or replaced.

Reference	Title
ASTM A126	Gray Iron Castings for Valves, Flanges, and Pipe Fittings
ASTM A276	Stainless and Heat-Resisting Steel Bars and Shapes
ASTM A536	Ductile Iron Castings
ASTM B148	Aluminum-Bronze Sand Castings
AWWA C508	Swing-Check Valves for Waterworks Service, 2 In. Through 24 In. NPS

PART 2 PRODUCTS

2.01 MANUFACTURERS

A. The Engineer believes the following candidate manufacturers are capable of producing equipment and/or products that will satisfy the requirements of this Section. This statement, however, shall not be construed as an endorsement of a particular manufacturer's products, nor shall it be construed that named manufacturers' standard equipment or products will comply with the requirements of this Section. Candidate manufacturers include Golden Anderson and APCO, or approved equal.

2.02 MATERIALS

A. Materials of construction shall be as follows:

Component	Material
Body, cover	Cast iron, ASTM A126, Class B
Disc	Ductile iron, ASTM A536
Seat rings	Aluminum bronze, ASTM B148 or Stainless steel, ASTM A276, Type 316
Hinge shafts and hinge pins	Stainless steel, ASTM A276, Type 301 or 304
Shaft bushings	Bronze, AWWA C508

B. Materials specified are considered the minimum acceptable for the purposes of durability, strength, and resistance to erosion and corrosion. The Contractor may propose alternative materials for the purpose of providing greater strength or to meet required stress limitations. However, alternative materials must provide at least the same qualities as those specified for the purpose.

2.03 CONSTRUCTION

A. Disc, disc arm, shaft, keyways, lever and spring shall be capable of closing within .05 seconds of pump stoppage and fluid moving at velocity of 8 feet per second. Spring tension shall be adjustable. The valve design shall permit mounting levers and springs on either side of the valve. The design of the spring attachment shall permit adjustment of closing force by tensioning the spring or replacement with different active length springs.

B. Valves shall be provided with a clear opening equal to or greater than the connecting piping, with no raised seating surface. Seats shall be threaded onto the body or fitted with an O-ring seal and locked in place with stainless steel screws or pins and shall be replaceable. Shafts shall be provided with stuffing box and packing or O-ring seals at each end. Seals shall be externally replaceable. Minimum shaft diameters shall be as follows:

Valve Inlet Connection Size, inches	Shaft diameter, inches
3	0.75
4	0.825
6	1.0
8	1.75
10	2.0
12	2.5

C. The pivot arm shall be secured to the disc with either twin bolted connections with lockwashers or a pinned nut. In either instance, the connection shall be designed to prevent disc movement relative to the arm. Shaft bearings shall extend the entire length of the shaft other than the section required for the disc arm attachment. Disc and lever arms shall be keyed to the shaft and retained by bushings or pins.

D. Unless otherwise specified, valves shall, as a minimum, conform to the following pressure ratings:

Size, inches	Working pressure, pressure, PSIG	Hydrostatic test, PSIG
2 through 12	175	300
14 through 20	150	225

E. Check valves wetted parts shall be coated with fusion bonded epoxy.

2.04 PRODUCT DATA

A. Manufacturer's catalog information including dimensions, cross-sectional views, details of construction and materials list shall be provided in accordance with Section 01 33 00.

PART 3 EXECUTION

3.01 INSTALLATION

A. Spring loaded swing check valves shall be installed in accordance with the manufacturer's recommendations.

END OF SECTION

THIS PAGE INTENTIONALLY LEFT BLANK

SECTION 40 05 65.26
PVC SWING CHECK VALVES

PART 1 GENERAL

1.01 DESCRIPTION

A. This section specifies PVC swing check valves.

1.02 REFERENCES

A. This section contains references to the following documents. They are a part of this section as specified and modified. Where a referenced document contains references to other standards, those documents are included as references under this section as if referenced directly. In the event of conflict between the requirements of this section and those of the listed documents, the requirements of this section shall prevail.

B. Unless otherwise specified, references to documents shall mean the documents in effect at the time of Advertisement for Bids or Invitation to Bid (or on the effective date of the Agreement if there were no Bids). If referenced documents have been discontinued by the issuing organization, references to those documents shall mean the replacement documents issued or otherwise identified by that organization or, if there are no replacement documents, the last version of the document before it was discontinued. Where document dates are given in the following listing, references to those documents shall mean the specific document version associated with that date, regardless of whether the document has been superseded by a version with a later date, discontinued or replaced.

Reference	Title
ASTM D1248	Polyethylene Plastics Molding and Extrusion Materials
ASTM D1784	Rigid Poly (Vinyl Chloride) (PVC) Compounds and Chlorinated Poly (Vinyl Chloride) (CPVC) Compounds
ASTM D4101	Standard Classification System and Basis for Specification for Polypropylene Injection and Extrusion Materials

PART 2 PRODUCTS

2.01 MANUFACTURERS

A. The Engineer believes the following candidate manufacturers are capable of producing equipment and/or products that will satisfy the requirements of this Section. This statement, however, shall not be construed as an endorsement of a particular manufacturer's products, nor shall it be construed that named manufacturers' standard equipment or products will comply with the requirements of this Section. Candidate manufacturers include Hayward, Asahi, Spears or approved equal.

2.02 MATERIALS

A. Materials of construction shall be as follows:

Component	Material
Body	Polypropylene, ASTM D4101 or CPVC, ASTM D1784
Bonnet	Polypropylene, ASTM D4101 or CPVC, ASTM D1784
Disc	Polypropylene, ASTM D4101 or CPVC, ASTM D1784
Seats, Gasket	EPDM, PTFE, or FKM
Hinge Pin	Polypropylene, ASTM D4101 or CPVC, ASTM D1784
Fasteners	316 Stainless Steel

B. Materials specified are considered the minimum acceptable for the purposes of durability, strength, and resistance to erosion and corrosion. The Contractor may propose alternative materials for the purpose of providing greater strength or to meet required stress limitations. However, alternative materials must provide at least the same qualities as those specified for the purpose.

2.03 REQUIREMENTS

A. Rated Limits: Pressure 100 psi; Temperature 73 °F

B. Valve End/Connections: Flanged, ASME Class 150

C. Valves shall have a top entry bonnet for maintenance purposes.

D. PVC swing check valves shall be equipped with external lever and weight or spring assist to minimize water hammer or off the discharge side of the pump to minimize chattering and assist in closing.

2.04 PRODUCT DATA

A. Manufacturer's catalog information including dimensions, cross-sectional views, details of construction and materials list shall be provided in accordance with Section 01 33 00.

PART 3 EXECUTION

3.01 INSTALLATION

A. PVC swing check valves shall be installed in accordance with the manufacturer's recommendations.

END OF SECTION

SECTION 40 05 65.29
DOUBLE-DISK CHECK VALVES

PART 1 GENERAL

1.01 DESCRIPTION

A. This section specifies double disc check valves of the center pivot, double disc, spring type. The valve shall fit as a wafer between piping flanges. There are three types:
   1. Type A: Valves used for general service throughout the plant where not otherwise specified.
   2. Type B: Low pressure valves for use in the RO system process pipelines (ROF, CF, ROC, DR and ROP)
   3. Type C: High pressure valves for use in the RO system stainless steel pipelines (ROF, ROC).

1.02 REFERENCES

A. This section contains references to the following documents. They are a part of this section as specified and modified. Where a referenced document contains references to other standards, those documents are included as references under this section as if referenced directly. In the event of conflict between the requirements of this section and those of the listed documents, the requirements of this section shall prevail.

B. Unless otherwise specified, references to documents shall mean the documents in effect at the time of Advertisement for Bids or Invitation to Bid (or on the effective date of the Agreement if there were no Bids). If referenced documents have been discontinued by the issuing organization, references to those documents shall mean the replacement documents issued or otherwise identified by that organization or, if there are no replacement documents, the last version of the document before it was discontinued. Where document dates are given in the following listing, references to those documents shall mean the specific document version associated with that date, regardless of whether the document has been superseded by a version with a later date, discontinued or replaced.

Reference	Title
ASTM A126	Gray Iron Castings for Valves, Flanges, and Pipe Fittings
ASTM A276	Stainless and Heat-Resisting Steel Bars and Shapes
ASTM A278	Gray Iron Castings for Pressure Containing Parts for Temperatures up to 650 Degrees F
ASTM A351/A351M	Steel Castings, Austenitic for High-Temperature Service

PART 2 PRODUCTS

2.01 ACCEPTABLE PRODUCTS

A. Type A: Valves shall be Dezurik/APCO Series 9000, Valmatic Dual Disc, Stockham Duo-Chek II, Gulf Valve Model MB, or approved equal, modified to provide the

specified features.

B. Type B: Valve shall be Valmatic, Dezurik, GA Industries, Cameron Techno, or approved equal

C. Type C: Valve shall be Cameron Techno Style 5053-316, Valmatic Model Dual Disc, Centerline Model 800, Dezurik/APCO Model 9000, or approved equal

2.02 MATERIALS

A. Materials of construction shall be as follows:

1. Type A:

Component	Material
Body	Cast iron, ASTM A126, Cl. B, or ASTM A278, Cl. 40 or Ductile iron to ASTM A536 Gr. 65-45-12
Disc	Aluminum Bronze or Stainless Steel, ASTM A351, Type 316
Seal	EPDM or Nitrile
Spring, hinge pin and stop pin	Stainless steel, ASTM A276, Type 316

2. Type B:

Component	Material
Body	Type 316 stainless steel
Disc	Stainless Steel, ASTM A351, Type 316
Seal	EPDM
Spring, hinge pin and stop pin	Stainless steel, ASTM A276, Type 316

3. Type C:

Component	Material
Body	Type 316 stainless steel
Disc	Stainless Steel, ASTM A351, Type 316
Seal	PTFE bonded EPDM
Spring, hinge pin and stop pin	Stainless steel, ASTM A276, Type 316

B. Materials specified are considered the minimum acceptable for the purposes of durability, strength, and resistance to erosion and corrosion. The Contractor may propose alternative materials for the purpose of providing greater strength or to meet required stress limitations. However, alternative materials must provide at least the same qualities as those specified for the purpose.

2.03 MANUFACTURE

A. Type A:

1. The check valve discs shall be spring-loaded and normally closed by means of one or more torsion springs. Unless otherwise specified, discs or plates shall be aluminum bronze. End connections shall be flat or plain faced. Seating shall be resilient and watertight.
2. Unless otherwise specified, valves shall, as a minimum, conform to the following pressure ratings:

Working pressure, psig	Hydrostatic test pressure, psig
175	300

B. Type B:
1. Working Pressure:
   a. Permeate and CIP Service: 150 psi
   b. RO Feed and Concentrate with pressure less than 285 psi (Class 150).
2. Silent check valves shall be compact wafer style, designed to fit between ANSI flanges.
3. Check valve shall be spring loaded, normally closed by means of one or more heavy duty stainless steel torsion springs. Flow from the pumps shall cause the valve to open and upon pump shut down, the torsion spring will shut the valve before reverse flow starts and at a point of zero velocity of non-slam closure.
4. Seating shall be resilient and watertight. The sealing element shall be EPDM or Viton (Buna-N is not acceptable). Valve body, and doors shall be fabricated of type 316 stainless steel. Torsion spring, hinge shaft and stop pin shall be constructed of 316 stainless steel.

C. Type C:
1. Service Conditions: For installation between ASME Class 300 flanges.
2. Pressure Rating: 700 psig minimum.

2.04 PRODUCT DATA

A. Manufacturer's product data shall be provided in accordance with Section 01 33 00.

PART 3 EXECUTION

3.01 INSTALLATION

A. Double disc check valves shall be installed in accordance with the manufacturer's recommendations.

END OF SECTION

THIS PAGE INTENTIONALLY LEFT BLANK

SECTION 40 05 65.30
THERMOPLASTIC CHECK VALVES

PART 1 GENERAL

1.01 DESCRIPTION

A. This section specifies ball and disc type check valves of thermoplastic construction.
   1. Type A: PVC or CPVC ball or diaphragm check valves used in instrumentation systems.
   2. Type B: PVDF poppet style check valves used for the sulfuric acid tank vent lines.

1.02 REFERENCES

A. This section contains references to the following documents. They are a part of this section as specified and modified. Where a referenced document contains references to other standards, those documents are included as references under this section as if referenced directly. In the event of conflict between the requirements of this section and those of the listed documents, the requirements of this section shall prevail.

B. Unless otherwise specified, references to documents shall mean the documents in effect at the time of Advertisement for Bids or Invitation to Bid (or on the effective date of the Agreement if there were no Bids). If referenced documents have been discontinued by the issuing organization, references to those documents shall mean the replacement documents issued or otherwise identified by that organization or, if there are no replacement documents, the last version of the document before it was discontinued. Where document dates are given in the following listing, references to those documents shall mean the specific document version associated with that date, regardless of whether the document has been superseded by a version with a later date, discontinued or replaced.

Reference	Title
ASTM D1248	Polyethylene Plastics Molding and Extrusion Materials
ASTM D1784	Rigid Poly (Vinyl Chloride) (PVC) Compounds and Chlorinated Poly (Vinyl Chloride) (CPVC) Compounds

PART 2 PRODUCTS

2.01 ACCEPTABLE PRODUCTS

A. Type A: Valves shall be Nibco – Chemtrol, Asahi – Duo Block, Spears, or approved equal.

B. Type B: Valve shall be Plastomatic Series CKS of approved equal.

2.02 REQUIREMENTS

A. Type A:
   1. PVC or CPVC ball check valves are required for pressure gauges, pump casing drains and other locations as shown on the Drawings when located in a PVC or CPVC line. Mount in vertical direction with flow going up.
   2. PVC or CPVC Plastic Ball Check valves shall use a True Union Design.
   3. The elastomer shall be Viton.
   4. Pressure: 150 psi minimum.

B. Type B:
   1. PVDF body, self-closing type.
   2. Spring closure shall be PFA encapsulated stainless steel.
   3. Cracking pressure shall be 1.0 – 1.5 psi
   4. Seals shall be FKM.
   5. Ends shall be socket type.

2.03 PRODUCT DATA

A. Manufacturer's product data shall be provided in accordance with Section 01 33 00.

PART 3 EXECUTION

3.01 INSTALLATION

A. Check valves shall be installed in accordance with the manufacturer's recommendations.

END OF SECTION

SECTION 40 05 66.04
GLOBE VALVES

PART 1 GENERAL

1.01 GENERAL

A. Line Size: 2 through 8 inches: Rated Limits: Pressure 200 psi; Temperature 100 °F (WOG)

1.02 VALVE MATERIALS

A. Body: Cast Iron

B. Disc: Bronze or Cast Iron

C. Seats: Bronze

D. Stem: Brass or Bronze

1.03 VALVE CONFIGURATION

A. Valve End/Connections: Flange, ASME B16.1 Class 125

B. Operator: Handwheel; rising stem

C. Reference Standard: MSS SP-85, Type 1

1.04 SUBMITTALS

A. Action Submittals: Data sheets, dimensional drawings, and materials of construction

B. Information Submittals: None.

C. Closeout Submittals: None.

1.05 CANDIDATE MANUFACTURERS

A. Kitz

B. Hattersley

C. Or approved equal

PART 2 PRODUCTS – NOT USED

PART 3 EXECUTION – NOT USED

END OF SECTION

THIS PAGE INTENTIONALLY LEFT BLANK

SECTION 40 05 66.23
NEEDLE VALVES

PART 1 GENERAL

1.01 GENERAL

A. Line Size: 1/8 through 1/2 inches

B. Rated Limits: Pressure 2580 psi; Temperature 200 °F

1.02 VALVE MATERIALS

A. Body: Stainless Steel 316

B. Stem: Stainless Steel 316

C. Seats: Stainless Steel 316

D. Seals/Packing: PTFE or Reinforced PTFE

1.03 VALVE CONFIGURATION

A. Valve End/Connections: Threaded, Female or Compression

B. Operator: Screwed Bonnet, Bard Handle

1.04 SUBMITTALS

A. Action Submittals: Data sheets, dimensional drawings, and materials of construction.

B. Information Submittals: None.

C. Closeout Submittals: None.

1.05 CANDIDATE MANUFACTURERS

A. Swagelok JB Series

B. Parker U Series

C. Or approved equal

PART 2 PRODUCTS – NOT USED

PART 3 EXECUTION – NOT USED

END OF SECTION

THIS PAGE INTENTIONALLY LEFT BLANK

SECTION 40 05 67.13
BACKFLOW PREVENTERS

PART 1 GENERAL

1.01 DESCRIPTION

A. Scope:
1. This section specifies reduced pressure principle and double check valve backflow preventers. Locations and sizes shall be as shown on Drawings.
2. The backflow preventers shall meet all requirements of City Greenbook 212-7, Greenbook 800-2.3, and City Standard Drawing SDW-105.

1.02 QUALITY ASSURANCE

A. References:
1. This section contains references to the following documents. They are a part of this section as specified and modified. Where a referenced document contains references to other standards, those documents are included as references under this section as if referenced directly. In the event of conflict between the requirements of this section and those of the listed documents, the requirements of this section shall prevail.
2. Unless otherwise specified, references to documents shall mean the documents in effect at the time of Advertisement for Bids or Invitation to Bid (or on the effective date of the Agreement if there were no Bids). If referenced documents have been discontinued by the issuing organization, references to those documents shall mean the replacement documents issued or otherwise identified by that organization or, if there are no replacement documents, the last version of the document before it was discontinued. Where document dates are given in the following listing, references to those documents shall mean the specific document version associated with that date, regardless of whether the document has been superseded by a version with a later date, discontinued or replaced.

Reference	Title
AWWA C510	Standard for Double Check Valve Backflow Prevention Assembly
AWWA C511	Standard for Reduced-Pressure Principle Backflow Prevention Assembly

B. Testing:
1. Double Check Valve backflow preventer assemblies shall meet the factory, laboratory, and field test provisions of Section 212-7.2 of Greenbook.
2. Reduced Pressure Zone backflow preventers shall meet the factory, laboratory, and field test provisions of Section 212-7.3 of Greenbook.

PART 2 PRODUCTS

2.01 MANUFACTURERS

A. Approved manufacturers for backflow prevention are listed on the following City website.

https://www.sandiego.gov/public-utilities/permits-construction/construction-and-development/backflow

2.02 PRODUCT DATA

A. The following information shall be provided in accordance with Section 01 33 00 for Reduced Pressure Zone backflow preventers:
   1. Affidavit of Compliance with AWWA C511.
   2. Certificate of Approval as specified in AWWA C511.

PART 3 EXECUTION

3.01 INSTALLATION

A. Backflow preventers shall be installed in accordance with City Standard Drawing SDW-105.

END OF SECTION

SECTION 40 05 72
SPECIALTY VALVES AND EYEWASH STATIONS

PART 1 GENERAL

1.01 DESCRIPTION

A. This section specifies specialty valves and eyewash stations which are auxiliary to process piping systems.

1.02 REFERENCES

A. This section contains references to the following documents. They are a part of this section as specified and modified. Where a referenced document contains references to other standards, those documents are included as references under this section as if referenced directly. In the event of conflict between the requirements of this section and those of the listed documents, the requirements of this section shall prevail.

B. Unless otherwise specified, references to documents shall mean the documents in effect at the time of Advertisement for Bids or Invitation to Bid (or on the effective date of the Agreement if there were no Bids). If referenced documents have been discontinued by the issuing organization, references to those documents shall mean the replacement documents issued or otherwise identified by that organization or, if there are no replacement documents, the last version of the document before it was discontinued. Where document dates are given in the following listing, references to those documents shall mean the specific document version associated with that date, regardless of whether the document has been superseded by a version with a later date, discontinued or replaced.

Reference	Title
ASME SEC VIII Div 2	Boiler and Pressure Vessel Code, Pressure Relief Devices
ASTM A126	Gray Iron Castings for Valves, Flanges, and Pipe Fittings

PART 2 PRODUCTS

2.01 SHEAR GATES – NOT USED

2.02 FLAP GATES – NOT USED

2.03 MUD VALVES – NOT USED

2.04 PRESSURE RELIEF VALVES

A. Pressure relief valves for air shall be ASME certified, Watts Fig 41A, Lonergan L14/L40 Series, or approved equal. Size and pressure settings shall be as specified or as required for the service intended. Pressure relief valves for cold and hot water shall be McDonnell and Miller 230, Watts 174A, Cash Acme F-82, Lonergan L14/L40 Series, or approved equal.

2.05 COMBINATION TEMPERATURE-PRESSURE RELIEF VALVES – NOT USED

2.06 HOSE VALVES

A. Unless specified otherwise, hose valves shall be a brass angle valve, composition disc, Crane 17, Lunkenheimer 214, Powell 151, or approved equal with threaded nipple adapter for hose connection.

2.07 FLUSHING COCKS – NOT USED.

2.08 QUICK DISCONNECTS

A. Quick disconnects shall not be disconnectable under pressure. Quick disconnects for air service shall be Swagelok, Tomco, or approved equal, and shall be 1/2 inch, unless otherwise specified. Quick disconnects for water service shall be EverTite Part B, Gate Part B, or approved equal, and shall be 1 inch, unless specified otherwise.

2.09 STOP AND DRAIN VALVES

A. Stop and drain valves shall be Mueller H-10284, or approved equal.

2.10 COMBINATION EMERGENCY EYE/FACE WASH AND SHOWER UNITS:

A. EEWS-1 (Eye/Face Wash and Shower Combination Unit): Schedule 40 galvanized steel piping and fittings, chrome-plated brass ball valves, stainless steel bowl, ABS plastic shower head, and powder coated cast iron floor flange. Bradley Model S19314TT, Haws; Guardian; or approved equal.

B. Emergency Eye/Face Wash Units:
   1. EEW-1 (Eye/Face Wash Unit, Sink- or Counter-Mounted): 90-degree swivel activation and chrome-plated brass construction. Haws Model 7611; Guardian Model G1775; or approved equal.
   2. EEW-2 (Eye/Face Wash Unit, Wall-Mounted): Stainless steel bowl, chrome-plated brass ball valves, and cast-aluminum wall mounting bracket. Haws Model 7360B-7460B; Guardian Model G1750; or approved equal.

2.11 PRODUCT DATA

A. Manufacturer's product data shall be provided in accordance with Section 01 33 00.

PART 3 EXECUTION

3.01 INSTALLATION

A. Specialty valves shall be installed in accordance with the manufacturer's recommendations.

END OF SECTION

SECTION 40 05 72.82
PVC DEGASSING VALVES

PART 1 GENERAL

1.01 DESCRIPTION

A. This section specifies PVC Degassing Valves for continuous automatic venting.

1.02 REFERENCES

A. This section contains references to the following documents. They are a part of this section as specified and modified. Where a referenced document contains references to other standards, those documents are included as references under this section as if referenced directly. In the event of conflict between the requirements of this section and those of the listed documents, the requirements of this section shall prevail.

B. Unless otherwise specified, references to documents shall mean the documents in effect at the time of Advertisement for Bids or Invitation to Bid (or on the effective date of the Agreement if there were no Bids). If referenced documents have been discontinued by the issuing organization, references to those documents shall mean the replacement documents issued or otherwise identified by that organization or, if there are no replacement documents, the last version of the document before it was discontinued. Where document dates are given in the following listing, references to those documents shall mean the specific document version associated with that date, regardless of whether the document has been superseded by a version with a later date, discontinued or replaced.

Reference	Title
ASTM D1248	Polyethylene Plastics Molding and Extrusion Materials
ASTM D1784	Rigid Poly (Vinyl Chloride) (PVC) Compounds and Chlorinated Poly (Vinyl Chloride) (CPVC) Compounds
ASTM D4101	Standard Classification System and Basis for Specification for Polypropylene Injection and Extrusion Materials

PART 2 PRODUCTS

2.01 MANUFACTURERS

A. The Engineer believes the following candidate manufacturers are capable of producing equipment and/or products that will satisfy the requirements of this Section. This statement, however, shall not be construed as an endorsement of a particular manufacturer's products, nor shall it be construed that named manufacturers' standard equipment or products will comply with the requirements of this Section. Candidate manufacturer is Plast-o-matic DGV Series or approved equal.

2.02 MATERIALS

A. Materials of construction shall be as follows:

Component	Material
Body	PVC, ASTM D1784
Bonnet	Polypropylene, ASTM D4101 or PVC, ASTM D1784
Disc	Polypropylene, ASTM D4101 or PVC, ASTM D1784
Seats, Gasket	EPDM, PTFE, or FKM
Hinge Pin	Polypropylene, ASTM D4101 or PVC, ASTM D1784
Fasteners	316 Stainless Steel

B. Materials specified are considered the minimum acceptable for the purposes of durability, strength, and resistance to erosion and corrosion. The Contractor may propose alternative materials for the purpose of providing greater strength or to meet required stress limitations. However, alternative materials must provide at least the same qualities as those specified for the purpose.

2.03 REQUIREMENTS

A. Rated Limits: Pressure 100 psi; Temperature 85 °F

B. Valve End/Connections: Threaded

2.04 PRODUCT DATA

A. Manufacturer's catalog information including dimensions, cross-sectional views, details of construction and materials list shall be provided in accordance with Section 01 33 00.

PART 3 EXECUTION

3.01 INSTALLATION

A. PVC degassing valves shall be installed in accordance with the manufacturer's recommendations.

END OF SECTION

SECTION 40 05 78.13

AIR/VACUUM VALVES FOR WATER SERVICE

PART 1 GENERAL

1.01 DESCRIPTION

A. Scope: This section specifies air release valves, air and vacuum valves, and combination air valves for clean water service, pumping, and storage applications. All the applications on this project with the exception of the PI, PE, ML, RAS and WAS are considered clean water.

B. The valves shall comply with requirements of 2021 Greenbook 212-5.6.

C. Types:
   1. Air Release Valves: Air release valves (ARV) shall have a small venting orifice to vent the accumulation of air and other gases with the line or system under pressure. Size and capacity shall be as specified.
   2. Air and Vacuum Valves: Air and vacuum valves (AVV) shall have a large venting orifice to permit the release of air as the line is filling or relieve the vacuum as the line is draining or is under negative pressure. Size and capacity shall be as specified.
   3. Combination Air Valves: Combination air valves (CAV) shall have operating features of both the air and vacuum valve and the air release valve. They include both single- and dual-body construction. Size and capacity shall be as specified.

1.02 REFERENCES

A. This section contains references to the following documents. They are a part of this section as specified and modified. Where a referenced document contains references to other standards, those documents are included as references under this section as if referenced directly. In the event of conflict between the requirements of this section and those of the listed documents, the requirements of this section shall prevail.

B. Unless otherwise specified, references to documents shall mean the documents in effect at the time of Advertisement for Bids or Invitation to Bid (or on the effective date of the Agreement if there were no Bids). If referenced documents have been discontinued by the issuing organization, references to those documents shall mean the replacement documents issued or otherwise identified by that organization or, if there are no replacement documents, the last version of the document before it was discontinued. Where document dates are given in the following listing, references to those documents shall mean the specific document version associated with that date, regardless of whether the document has been superseded by a version with a later date, discontinued or replaced.

Reference	Title
ASTM A126	Gray Iron Castings for Valves, Flanges, and Pipe Fittings

Reference	Title
ASTM A240	Heat-Resisting Chromium and Chromium Nickel Stainless Steel Plate, Sheet, and Strip for Pressure Vessels

1.03 SCHEDULE

A. See Drawings for valve size and quantity. All air valves shall be combination air valves. Valves shall have the following characteristics:

Valve size, inches	Type	Large Orifice Size, inches	Small Orifice Size, inches	Remarks
1	CAV	1	0.078	
2	CAV	2	0.094	

CFFAM : Cubic Feet of Free Air per Minute

PART 2 PRODUCTS

2.01 ACCEPTABLE PRODUCTS

A. Combination air valves shall be APCO as manufactured by Valve and Primer Corporation, Crispin as manufactured by Multiplex Manufacturing Company, or approved equal, modified to provide the specified features and to meet the specified operating conditions.

2.02 MATERIALS

A. Make and materials for water service air valves shall be per City Approved Material List located at the link below:

Microsoft Word - Water AML Update 2020 (sandiego.gov)

2.03 CONSTRUCTION

A. Air release valves shall be float operated, compound lever type, except air release valves less than 1-inch may be simple lever type.

B. Air and vacuum valves shall be designed to protect the float from direct contact of the rushing air and water to prevent the float from closing prematurely in the valve. The seat shall be fastened into the valve cover, and shall be easily removed if necessary. The float shall be center or peripheral guided for positive shutoff into the seat.

C. Combination air valves (CAV), unless otherwise specified, shall be single-body construction in sizes 1- through 6-inch and dual-body construction in sizes 8-inch and larger. Single-body construction shall be designed to provide all functions within one housing. The body inlet shall be baffled to protect the float and the large and small orifices shall be designed so that during large orifice closure, the small air release orifice will open to allow small amounts of air to escape. Dual-body construction shall

combine one air and vacuum valve and one air release valve with interconnecting piping and gate valve.

D. Valves shall be suitable for pressures up to 150 psi.

2.04 PRODUCT DATA

A. The following information shall be provided in accordance with Section 01 33 00:
   1. Manufacturer's product data.
   2. Applicable O&M instruction manuals per Section 01 78 23.

PART 3 EXECUTION

3.01 INSTALLATION

A. Combination air valves shall be installed in accordance with the manufacturer's recommendations. Unless otherwise specified, isolation valves per Section 40 05 60 shall be provided below each air valve.

END OF SECTION

THIS PAGE INTENTIONALLY LEFT BLANK

SECTION 40 05 78.23

AIR/VACUUM VALVES FOR WASTEWATER SERVICE

PART 1 GENERAL

1.01 DESCRIPTION

A. Scope:
   1. This Section specifies air release valves, air and vacuum relief valves, and combination valves for wastewater service.
   2. The valves shall comply with requirements of 2021 Greenbook Section 212-5.6.

B. Types:
   1. General: Valves furnished under this specification shall be tubular in design with direct acting cylindrical hollow and solid float mechanisms designed to function efficiently in the presence of grease, fibers and particulate material commonly present in municipal and domestic wastewaters and wastewater treatment effluents. The design shall incorporate materials and geometry that provides self-flushing of the valve internals on emptying.
      a. Valve designs that employ float guide brackets, levers, springs and ball type floats are specifically prohibited. Valves furnished under this Section shall be fitted with direct vents of flanged for connection to piping connections as indicated. Main venting orifices and outlet connections shall be equal in diameter to the specified pipeline connection.
      b. Air and vacuum valve nomenclature originated with valves used in clean water service which had the three valve types listed in below. Valves for wastewater service as covered in this Section are available in the types listed in below.
   2. Air Release Valves: Wastewater air release valves (ARV) shall have a small venting orifice to vent the accumulation of air and other gases with the line or system under pressure. Size and capacity shall be as specified.
   3. Air and Vacuum Valves: Wastewater air and vacuum valves (ARVV) shall have a dual float system with a large venting orifice to permit the release of air as the line is filling or relieve the vacuum as the line is draining or is under negative pressure. As the pipeline approaches the full condition on filling, the large orifices shall be sealed by the primary float and the secondary float shall allow the remaining air to vent at a reduced rate to prevent development of hydraulic transients. Size and capacity shall be as specified.
   4. Combination Air Valves: Wastewater combination air valves (CARV) shall have operating features of both the air and vacuum valve and the air release valve. Size and minimum capacity under both air release and vacuum relief shall be as specified.
   5. Combination Air Valve with Bias Spring: Wastewater combination air valves with bias springs (CARV-B) are similar to CARV units except that a bias spring is employed that causes air to vent through the smaller orifice at a reduced rate to prevent development of hydraulic transients during start-up or other venting periods (and not only at excessively high exhaust velocities as happens in CARV units).

1.02 REFERENCES

A. This Section contains references to the following documents. They are a part of this Section as specified and modified. Where a referenced document contains references to other standards, those documents are included as references under this Section as if referenced directly. In the event of conflict between the requirements of this Section and those of the listed documents, the requirements of this Section shall prevail.

B. Unless otherwise specified, references to documents shall mean the documents in effect at the time of Advertisement for Bids or Invitation to Bid (or on the effective date of the Agreement if there were no Bids). If referenced documents have been discontinued by the issuing organization, references to those documents shall mean the replacement documents issued or otherwise identified by that organization or, if there are no replacement documents, the last version of the document before it was discontinued. Where document dates are given in the following listing, references to those documents shall mean the specific document version associated with that date, regardless of whether the document has been superseded by a version with a later date, discontinued or replaced.

Reference	Title
ASTM A240	Heat-Resisting Chromium and Chromium Nickel Stainless Steel Plate, Sheet, and Strip for Pressure Vessels

1.03 SCHEDULE

A. Valve sizes and quantities shall be as shown on the Drawings.

1.04 SUBMITTALS

A. Submittal material, to be provided in accordance with Section 01 33 00, shall include the following:
   1. Catalog information for each size to be furnished
   2. A copy of this specification Section and the referencing Section and all other applicable specification Sections governing the pump, drive and driver, supports and specified appurtenances. The specification copies shall be complete with addendum updates included, with each Paragraph check-marked to indicate specification compliance or marked to indicate requested deviations from specification requirements. Check marks shall denote full compliance with a Paragraph as a whole. If deviations from the specifications are indicated and, therefore requested by the Contractor, each deviation shall be underlined and denoted by a number in the margin to the right of the identified Paragraph. The remaining portions of the Paragraph not underlined will signify compliance on the part of the Contractor with the specifications. The submittal shall be accompanied by a detailed, written justification for each deviation. Failure to include a copy of the marked-up specification Sections, along with justification(s) for any requested deviations to the specification requirements, with the submittal shall be sufficient cause for rejection of the entire submittal with no further consideration.

3. Certified performance information produced by an independent testing laboratory acceptable to the Construction Manager, specific to the construction details for the model proposed, confirming performance not less than that required by this specification. The test methodology may use mathematical modeling techniques to affirm specific model size performance so long as the test performance for specific size valve(s) has been spot-checked by bench tests of the valve size in question and the results show modeling performance within ± 5 percent of bench test results. The performance confirmation shall be dated, signed by the author of responsible for the test information, notarized as true and correct.
4. Materials of construction
5. Installation requirements

PART 2 PRODUCTS

2.01 ACCEPTABLE PRODUCTS

A. Wastewater air release valves shall be Vent-Tech SWG, as furnished by International Valve Marketing, or Vent-O-Mat RGX as produced by RF Technologies, Inc. or approved equal.

B. Alternative manufacturers' products will be considered, provided the following information has been submitted and accepted as proof the proposed substitution provides equal or improved performance over that of the specified product and materials. Any submittal requesting substitution shall include the information specified under paragraph 1.04 and the following:
   1. Detailed construction and functional description of operation with bill of materials and detailed graphics showing construction features and step-by-step operation demonstrating compliance with the features and operational characteristics specified in this Section.
   2. Certified performance (air venting and vacuum venting) curves for each size valve to be provided. Performance curves shall be certified and notarized correct by an independent testing laboratory.
   3. Not less than four affidavits of performance signed by general managers or executive officers of the owning agency and notarized. The affidavits of performance shall, as a minimum, document the following:
      a. Side-by-side operation with the specified Vent-Tech or Vent-O-Mat valves in unscreened wastewater service for periods of not less than 6 months.
      b. During the side-by-side periods of operation, the proposed valve and the specified valves shall have been inspected for clogging and function on not less than a weekly basis and shall not have required more maintenance effort than the valves specified in this Section.
      c. The affidavits shall contain unreserved acceptance of the proposed valve as a complete equal to the Vent-Tech or Vent-O-Mat valves specified herein.

2.02 MATERIALS

Component	Material
Body and cover	Stainless steel, ASTM A240, Type 316L
Hardware	Stainless Steel, Type 316
Primary and secondary floats	High density polyethylene
Seats	Nitrile or EPDM
Trim and venting orifices	Stainless steel, ASTM A240, Type 316L

A. Materials specified are considered the minimum acceptable for the purposes of durability, strength, and resistance to erosion and corrosion. The Contractor may propose alternative materials for the purpose of providing greater strength or to meet required stress limitations. However, alternative materials must provide at least the same qualities as those specified for the purpose.

2.03 CONSTRUCTION

A. General:
   1. All wastewater air release and vacuum valves shall have tubular elongated bodies and shall be specifically designed for operation on wastewater and wastewater applications. Valve bodies shall be certified for not less than twice the system pressure specified in paragraph 1.03 and shall have over pressure relief features to prevent catastrophic rupture of the valve body. The relief feature shall be incorporated into easily replaced components. The valve size shall be the nominal size of the valve inlet and outlet (piping connection) as herein described. All valve clearances shall be designed for unobstructed flow of air through all passages with a net cross-sectional area at least equal to that of the nominal piping connection. The valve manufacture shall be prepared to document compliance with this requirement in all respects for each component in the valve assembly.

B. Body:
   1. The valve body shall have a fused glass lining or equivalent finish. The valve body shall, be sized to assure the unobstructed annular space between the valve floats and the inner surface of the valve body exceeds the cross-sectional area of the valve's inlet and outlet connections. Valved upper and lower flushing ports (1/2 inch minimum) shall be provided. Materials for flushing ports shall be the same as the body.

C. Air Inlet/Outlet Fitting:
   1. The air inlet/outlet fitting shall have a net opening equal in cross-sectional area to the valve size and shall be screened with a high efficiency punched screen to prevent ingression of airborne debris. The connection from the air inlet cap chamber to the valve body shall be a smooth toroidal transition, polished to facilitate movement from the cap to the body with minimal energy losses by gradual acceleration to the connection with the valve body air passages. The underside of

the fitting shall be finished smooth to provide an airtight seal with the anti-surge floats. The valve shall form an airtight seal with an internal pressure of no more than 3 psig.

D. Air Outlet/Inlet Fitting:
   1. The air outlet/inlet fitting at the connection to the piping shown shall formed to provide a smooth transition to the valve outlet in a manner equal to that described in paragraph 2.03 Air Inlet/Outlet Fitting. The connection to the piping system shall have a cross-sectional area as described in paragraph 2.03 General.

E. Floats:
   1. The anti-shock float shall have not less than five tubular orifices to evenly distribute pressurized air across the face of the float. Air inlets for the tubular orifices shall be a smooth, rounded transition to reduce shock and discharged moisture as the as the float seats. The main float shall be tubular in construction, fitted with a centering guide on the upper float cap for contacting and centering on the anti-shock float.

2.04 SPARE VALVES

A. One spare valve shall be provided for each type and size of valve specified.

2.05 PRODUCT DATA

A. The following information shall be provided in accordance with Section 01 33 00:
   1. Manufacturer's product data.
   2. O&M instructions per Section 01 78 23.

PART 3 EXECUTION

3.01 INSTALLATION

A. Wastewater air release and vacuum valves shall be installed in accordance with the manufacturer's recommendations. Isolation valves shall be provided below each air valve, as shown on the Drawings.

END OF SECTION

THIS PAGE INTENTIONALLY LEFT BLANK

SECTION 40 06 20.13
POWER ACTUATED VALVE AND GATE ACTUATOR SCHEDULE FOR PROCESS SERVICES

PART 1 GENERAL

1.01 DESCRIPTION

A. This section specifies requirements for actuators for valves and gates that are positioned or controlled by means other than manual actuation. For the purposes of this Section, actuated valves and gates include valves and/or gates that are operated and/or controlled using hydraulic, pneumatic, or electric power.

1.02 RELATED SECTIONS

A. Section 40 05 57.23 – Powered Actuators

B. Section 40 05 60 – Valves

C. Section 43 05 11 – General Requirements for Equipment

1.03 REFERENCES

A. This section contains references to the following documents. They are a part of this section as specified and modified. Where a referenced document contains references to other standards, those documents are included as references under this section as if referenced directly. In the event of conflict between the requirements of this section and those of the listed documents, the requirements of this section prevail.

Reference	Title
ISA-S75.02	Standard Control Valve Capacity Test Procedure

1.04 ADMINISTRATIVE REQUIREMENTS

A. Unit Responsibility: Assign Unit Responsibility, as specified in Section 43 05 11, to the actuator manufacturer. The actuator manufacturer has Unit Responsibility, as defined in Section 43 05 11, for each valve or gate and the associated actuator. Assemble the valve/gate and actuator at the factory for shipment to the project site.

1.05 SUBMITTALS

A. Action Submittals:
   1. Procedures: Section 01 33 00.
   2. Valve Specifications for all valve types (Valve Specifications in Sections 40 05 60 through 40 05 78). Indicate with check marks where the valve supplied meets the requirements specified and with written amendments where the product differs from the specification.

3. Catalog cuts and/or shop drawings for each valve type listed in the Actuated Valve and Gate Schedule. For each valve type (Valve Specification in Sections 40 05 60 through 40 05 78) indicate materials of construction, dimensions, operating torque, fail position, valve end connection configuration, pressure rating, and operating temperature range.
4. Open/Close time. Where open/close times are specified in the Actuated Valve and Gate Schedule, submit information documenting valve operating speed. Include information on motor operating speed, gear ratio, exhaust port flow restriction, or other means of speed control.
5. For each solenoid valve type and size combination, submit manufacturer's literature listing enclosure type, solenoid valve model number/type, maximum differential operating pressure, and minimum operating pressure.
6. List actuator type for each equipment number listed in the Actuated Valve and Gate Schedule.
7. Submittal information listed in actuator specification.
8. Certificate of Unit Responsibility attesting that the Contractor has assigned unit responsibility in accordance with the requirements of this section and Section 43 05 11.

B. Closeout Submittals:
1. Procedures: Section 01 77 00.
2. Operating and maintenance submittals per Section 01 78 23.

1.06 ACTUATED VALVE AND GATE SCHEDULE

A. Furnish valves and gates conforming to the requirements specified in the Actuated Valve and Gate Schedule

B. Equipment Tag: Tag numbers are based on P&IDs.

C. Valve / Gate Type:
1. The Gate/Valve Type column identifies a Valve Specification or Gate Specification for each Valve/Gate and Actuator combination.
2. Refer to the listed specification for the required valve or gate characteristics (i.e. valve/gate materials, dimensions, and configuration).

D. Powered actuator types are specified in Section 40 05 57.23. Actuator types used in the valve and gate schedule are defined as follows:

Actuator Type (ACTUSPEC)	Service	Definition
EQTT-460V	Throttling (Modulating)	Electric motor quarter-turn
EMTT-460V	Throttling (Modulating)	Electric motor multi-turn
EQTI-460V	Isolating (Open-Close)	Electric motor quarter-turn
EMTI-460V	Isolating (Open-Close)	Electric motor multi-turn
EQTT-120V	Throttling (Modulating)	Electric motor quarter-turn
EQTI-120V	Isolating (Open-Close)	Electric motor quarter-turn

Actuator Type (ACTUSPEC)	Service	Definition
EQFS-120V	Fail-Safe (Open-Close)	Electric Motor, Spring Return

E. Actuator Enclosure, NEMA Type: Enclosure requirements for actuators are specified by NEMA enclosure type.

F. Maximum Pressure Differential: Pressure drop across each valve is specified for the purpose of actuator and gear box sizing. If no value is specified in this column, use the test pressure from the specified Piping System (Section 40 05 01) as the maximum pressure differential. Seating and unseating head requirements for gates are specified in the gate specification and are not included in this Section.

G. Open/Close Time: The open/close time refers to the time required for the valve to travel from full closed to full open. Open/close times are based on continuous operation of the actuator. Entries in this column are minimum values. Configure the actuator to provide an open/close time greater than the value listed in this column. Actuators that include programmed stops or steps are not acceptable.

H. Fail Position:
   1. Fail position indicates the position that the actuator will default to upon loss of electric, pneumatic, or hydraulic power supply for control of the actuator:
      a. Closed: (Fail Closed) Configure actuator to close upon loss of electric, pneumatic, or hydraulic power supply for control of the valve or gate.
      b. Open: (Fail Open) Configure actuator to open upon loss of electric, pneumatic, or hydraulic power supply for control of the valve or gate.
      c. Last: (Fail Last Position) Configure actuator to remain in the position last held by the actuator prior to loss of electric, pneumatic, or hydraulic power supply for control of the valve or gate.

I. Voltage: This column specifies the supply power voltage and number of phases for the power supply to solenoids, electric motor actuators, and electro-hydraulic actuators. Provide actuators for operation with the specified power supply voltage and phase.

J. Maximum Power Demand: This column specifies the maximum amperage rating for the electric power supply to the actuator. Provide actuators with electric power requirements that do not exceed the specified amperage rating listed in this column.

K. DeviceNet Communication: This column specifies which actuators are to be furnished with DeviceNet network communication capabilities. If a check mark (✓) appears in the schedule, furnish the associated actuator with DeviceNet communications capabilities as specified in the actuator specification.

L. Remote Control Station: This column specifies which actuators are to be furnished with a Remote Control Station. If a check mark (✓) appears in the schedule, furnish the associated actuator with a remote control station, configured as specified on the Drawings.

PART 2 PRODUCTS (NOT USED)

PART 3 EXECUTION (NOT USED)

PART 4 SCHEDULE

4.01 ACTUATED VALVE AND GATE SCHEDULE

Equipment Number	Valve/Gate Specification	Service	Actuator Type	Actuator Enclosure, NEMA Type	Maximum Differential Pressure (psi)	Open/Close Time (seconds)	Fail Position	Voltage (Voltage / Phase)	Maximum Power Demand, Amps	DeviceNet Communication	Remote Control Station	Notes
FCV-321	40 05 62.16	PE	EQTT-120V	4	40	60	LAST	120/1	By Vendor	No	No	
FCV-334	40 05 62.16	PI	EQTT-120V	4	40	60	LAST	120/1	By Vendor	No	No	

Notes:

1. *Valves and actuators that are part of Vendor supplied packages are not included. Refer respective P&IDs and specifications.*
2. *Solenoid valves are not included in this schedule.*

END OF SECTION

THIS PAGE LEFT INTENTIONALLY BLANK

SECTION 40 42 00
INSULATION FOR EXPOSED PIPING AND EQUIPMENT

PART 1 GENERAL

1.01 SUMMARY

A. Section includes thermal insulation for exposed piping, related equipment, and appurtenant surfaces.

B. Insulation will be required for air scour piping of the BNR and MBR Systems to a minimum height of 8 feet from ground or accessible platforms. Minimum insulation thickness shall be 1-inch.

1.02 RELATED SECTIONS

A. Section 01 61 00 – Common Product Requirements

B. Section 40 05 01 – Piping Systems

C. Section 40 05 07 – Hangers and Supports for Process Piping

D. Section 40 05 07.13 – Seismic Restraints for Piping

E. Section 40 05 45 – Piping System Identification

1.03 REFERENCES

A. This Section incorporates by reference the following documents. They are part of this Section insofar as specified and modified herein. In the event of conflict between the requirements of this Section and those of a listed document, the requirements of this Section prevail.

Reference	Title
ASTM B209	Aluminum and Aluminum-Alloy Sheet and Plate
ASTM C533	Calcium Silicate Block and Pipe Thermal Insulation
ASTM C534	Preformed Flexible Elastomeric Cellular Thermal Insulation in Sheet and Tubular Form
ASTM C547	Standard Specification for Mineral Fiber Pipe Insulation
ASTM C553	Mineral Fiber Blanket Thermal Insulation for Commercial and Industrial Applications
ASTM C592	Mineral Fiber Blanket Insulation and Blanket-Type Pipe Insulation
ASTM E84	Standard Test Method for Surface Burning Characteristics of Building Materials
ASTM E96	Water Vapor Transmission of Materials
FEDSPEC L-P-535E	Plastic Sheet (Sheeting) “Plastic Strip” Poly (Vinyl Chloride) and Poly (Vinyl Chloride-Vinyl Acetate), Rigid

Reference	Title
ASTM C1729	Aluminum Jacketing and Insulation

1.04 DEFINITIONS

A. Terminology used in this Section conforms to the following definitions:

B. Low-temperature range: operating temperature range of -100 to +100 degrees F.

C. Medium-temperature range: operating temperature range of 100 to 800 degrees F.

D. High-temperature range: operating temperature range of 800 to 1200 degrees F.

E. Very-high-temperature range: operating temperature range of 1200 to 1800 degrees F.

F. Jacket: protective outer layer placed over insulation on straight runs of pipe

G. Cover:
   1. protective outer layer placed over insulation on valves, strainers, expansion joints, flanges, pipe fittings, couplings, and equipment.

H. Exposed:
   1. All area exposures other than buried, submerged, or encased/embedded.

1.05 ADMINISTRATIVE REQUIREMENTS

A. Sequencing:
   1. After installation of insulation for pipe and equipment is complete, provide identification as described in Section 40 05 45.

1.06 SUBMITTALS

A. Procedures: Section 01 33 00

B. Action Submittals:
   1. A copy of this Section, addendum updates included, with each paragraph check-marked to indicate compliance or marked to indicate requested deviations.
   2. Manufacturer's descriptive literature, including insulation and jacket thickness, heat transfer coefficient, and methods of installation.
   3. Certification of jacket ratings for water vapor transmission, puncture and stiffness as specified.

C. Informational Submittals:
   1. Samples of each insulation material type and thickness along with typical jackets and covers for pipe, fittings, valves and appurtenances. Provide a full diameter segment for each insulation sample, 6 inches in length.

D. Closeout Submittals:
   1. Warranty Documentation

1.07 DELIVERY, STORAGE, AND HANDLING

A. Procedures: Section 01 61 00

B. Deliver insulation, jackets and covering to site using methods which do not damage the materials.

C. Deliver insulation materials to site clearly identified as to type and temperature rating.

D. Store insulation materials on site as recommended by the manufacturer to prevent damage or and weathering.

E. Replace damaged or weathered insulation materials with new materials.

PART 2 PRODUCTS

2.01 MANUFACTURERS

A. Manufacturers:
   1. Candidate manufacturers and models are listed below. The manufacturer's standard product may require modification to conform to specified requirements.

B. Cellular Elastomeric Tube:
   1. Armacell, AP Armaflex
   2. K-Flex, Insul-Tube
   3. Or approved equal

C. Mineral Wool:
   1. Roxul, ProRox PS960
   2. Johns Manville, Min-Wool 1200
   3. Or approved equal

D. Fiberglass:
   1. Johns Manville, Micro-Lok HP
   2. Owens Corning, FIBERGLAS
   3. Or approved equal

E. Calcium Silicate:
   1. Johns Manville, Thermo-12 Gold
   2. Or approved equal

F. Cellular Elastomeric Flexible Blanket:
   1. Armacell, AP Armaflex

2. K-flex, Insul-Sheet
3. Or approved equal

G. Fiberglass Flexible Blanket:
1. Amatex, Amamat
2. Lewco, E Glass
3. Or approved equal

H. Mineral Wool Flexible Blanket:
1. Johns Manville, Min-Wool 1200
2. Roxul, Enerwrap MA 960
3. Or approved equal

I. Silica or Ceramic Fiber Flexible Blanket (Very High Temperature Range):
1. Morgan Thermal Ceramics, Superwool 607 Blanket AC2
2. Unifrax, Fiberfrax
3. Harbison Walker, Inswool-HP
4. Hitco, Refrasil
5. Or approved equal

2.02 INSULATION SERVICE CONDITIONS

A. Insulation Service Types:
1. Insulation service types define the function of the insulation. The extent and location of insulation application is based on the function of the insulation. This Section specifies the following insulation service types: Condensate Control, Personnel Protection, Freeze Protection, and Energy Conservation. Insulation Service Types and insulation materials for piping systems are specified in Piping System Schedules.
2. Condensate Control is specified for piping that is to be insulated for condensate control. Where Condensate Control is specified for a piping service, furnish insulation for all pipe and pipeline appurtenances with a line size of ½-inch and larger that are located in Indoor Dry or Indoor Wet areas.
3. Personnel Protection is specified for piping that is to be insulated to protect personnel from injury related to exposure to extreme temperatures (high and low). Where Personnel Protection is specified for a piping service in the Piping System Schedules, furnish insulation for all pipe and pipeline appurtenances where all of the following conditions are present:
   a. Piping is connected to the discharge or exhaust of equipment (includes equipment and pipeline appurtenances).
   b. Equipment, pipe, or pipeline appurtenances are located within 0.0 to 8.0 feet above a floor, stair, landing, or other type of walkway accessible by plant staff, or within 4.0 feet of a guardrail or ladder cage. Pipe, pipeline appurtenances, joints, flanges, valves, and equipment in vaults, utilidors, and other spaces that

are not designed for pedestrian access by plant staff are not insulated for Personnel Protection.

4. Freeze Protection – NOT USED.
5. Energy Conservation is specified for piping that is to be insulated to conserve energy. Where Energy Conservation is specified for a piping service in the Piping System Schedules, furnish insulation for all pipe and pipeline appurtenances for the entire portion of the piping system that is exposed.

2.03 MATERIALS

A. General:
1. Provide materials that are new and undamaged.
2. Match specified pipe insulation and jacket/cover material for insulation on valves, strainers, fittings, expansion joints, flanges, and other pipe couplings. Furnish flexible blanket insulation and soft covers if insulation on valves, strainers, fittings, expansion joints, flanges, and other pipe couplings is not available in the same materials as the specified pipe insulation and jacket/cover.
3. Provide rigid insulation and shields at pipe supports for insulated pipe. Match specified jacket/cover material for pipe shields at pipe supports.
4. Provide insulating and sealing materials, including cements, coverings, etc., that do not contain asbestos, mercury, or lead.
5. When covering stainless steel pipe, pipeline appurtenances, or equipment, use insulation that complies with ASTM C795 and has less than 600 mg/liter of leachable chlorides, and greater than 20 mg/liter of sodium silicate for each mg/liter of chloride.
6. Flame spread classification for insulation materials is not to exceed 25 when tested in accordance with ASTM E84.
7. Use fibrous loose fill insulation for joint filler around insulated expansion joints.

B. Fiberglass Flexible Blanket:
1. Flexible fiberglass blanket insulation designed for continuous 1200 degree F service. 8.0 pounds per cubic foot density, minimum. Long fiber, random orientation, needled.

C. Mineral Wool Flexible Blanket:
1. Flexible mineral wool blanket insulation designed for continuous 1200 degree F service.

D. Silica or Ceramic Fiber Flexible Blanket:
1. High purity alumina and silica non-asbestos white ceramic fiber insulation designed for continuous 1800 degree F service.

E. Aluminum Insulation Jackets/Covers
1. Aluminum jackets and covers constructed of smooth finish aluminum sheet conforming to ASTM B209, alloy 3003, or 3105 temper H14, with integral vapor barrier.

2. Pipe Insulation Jacket thickness per ASTM C1729, as follows.

Outer Insulation Diameter (inches)	Aluminum jacket thickness, rigid insulation (inch)	Aluminum jacket thickness, flexible and semi-rigid insulation (inch)
≤ 8	0.016	0.016
8 thru 11	0.016	0.020
11 thru 24	0.016	0.024
24 thru 36	0.020	0.032
≥ 36	0.024	0.040

3. Furnish 0.030 inch, minimum thickness, for aluminum insulation covers at valves, strainers, fittings, expansion joints, flanges, and other pipe couplings.
4. Aluminum or stainless steel sheet metal screws.
5. Jackets secured with 0.020 inch thick by ¾ inch wide Type 304 stainless steel expansion bands.
6. Flashing includes aluminum caps, sealant and reinforcing.
7. Provide aluminum caps, 20 gauge. Cut to completely cover the insulation.
8. Provide sealants as recommended by the insulation manufacturer.
9. Provide wire mesh reinforcement or nylon fabric reinforcement in sealant at jacket and cover joints. Reinforcement material as recommended by the insulation manufacturer.

F. PVC Insulation Jackets and Covers:
1. One piece PVC covers and jackets. 20 mil thickness, minimum.
2. Pre-molded polyvinylchloride conforming to FEDSPEC L-P-535E, Composition A, Type II, Grade E4.

G. Non-combustible Fabric Cover:
1. Custom fit reusable covers. Sewn or stapled covers encapsulating insulation with stainless steel staples/hog rings. Close fit to the piping, pipeline appurtenance, or equipment housing.
2. Fabricated from 32 ounce TFE-coated or silicone coated fiberglass cloth with concealed/interior stitching, staples or hog rings (not exposed). For flexible blanket insulation installed for High-Temperature and Very High-Temperature Range applications, eliminate non-combustible fabric material on hot face of covers and provide stainless steel wire mesh on hot face of covers.
3. Fabric rated for continuous exposure to the temperature range of the insulation (Low, Medium, High, or Very High Temperature Range).
4. Secured in place with stainless steel lacing hooks, lock washers, and lacing wire.
5. Stitched or quilted to prevent consolidation, shifting, or settlement of insulation when subjected to vibration.

PART 3 EXECUTION

3.01 PREPARATION

A. Apply insulation over clean, dry surfaces.

B. Ensure insulation is dry before and during application.

C. Do not apply protective pipe coatings to outside surface of insulation jackets or covers.

D. Do not paint PVC, aluminum, or fabric covers.

E. Do not install insulation or jackets/covers before piping and equipment has been tested and approved. Thermal shields at pipe hangers and supports may be installed prior to testing.

F. Provide thermal pipe hanger shields at pipe supports and bracing as specified on the Drawings.

3.02 INSTALLATION

A. General:
   1. Where double layer insulation is provided to achieve the specified insulation thickness, install with staggered section joints.
   2. Supply insulated thermal pipe hanger shields and install during pipe support installation. Where insulated thermal pipe hanger shields are used, apply the following to all butt joints:
      a. For pipe insulation with a medium, high, or very high Operating Temperature Range, apply 3 inch wide vapor barrier tape or band over the butt joints.
      b. For pipe with a low Operating Temperature Range, apply a wet coat of vapor barrier lap cement on all butt joints and seal the joints with a minimum 3 inch wide vapor barrier tape or band.

B. Protect insulation and jackets from crushing, denting, and similar damage during construction. Do not penetrate or otherwise damage vapor barriers. Remove any insulation, jacket, and vapor barriers damaged during construction and install new material.

C. Provide flashing at joints between insulation jackets, between insulation jackets and insulation covers, and at endcaps. Provide flashing around flange sets, pipe couplings/connections, and joint fittings. Allow adequate clearance between insulation rings, jackets and the joint connection for the removal and reinstallation of hardware during inspection and maintenance activities.

D. Piping Insulation:
   1. Install uninterrupted (continuous) insulation as indicated for the specified Insulation Service Conditions (Condensation Control, Energy Conservation, Personnel Protection, or Freeze Protection). Insulate over pipe and all in-line devices such

as valves, fittings, flanges, couplings, strainers and other piping appurtenances. Butt insulation firmly together and provide jacket laps and joint strips with lap adhesive. Install jackets with their seams located on the underside of pipe.

2. Covers overlap the adjoining pipe insulation and jackets.
3. Install covers with their seams located on the underside of valves, fittings, flanges, couplings, strainers and other piping appurtenances.
4. Low Operating Temperature Range:
   a. Seal off ends of pipe insulation with a vapor barrier coating.
   b. Seal covers at edges with vapor barrier adhesive. Secure the ends of covers with vinyl tape. Overlap the jacket and the cover at least one inch with vinyl tape. Do not penetrate vapor barrier.
5. Medium, High, and Very High Operating Temperature Range:
   a. Seal ends of insulation with end joint strips and use waterproof adhesive to hold them in place.
   b. Mechanically secure covers using corrosion-resistant tacks pushed into the overlapping throat joint.
6. Insulation for Outdoor Piping:
   a. Where insulated pipe emerges from soil, concrete or asphalt terminate insulation for exposed pipe at the interface with insulation for buried pipe. If buried pipe is not insulated, extend insulation to within an inch above the finished surface. Do not push insulation into contact with soil, finished concrete, or asphalt surface.

E. Mechanical Equipment Insulation:
1. Unless otherwise specified in this Section, fit insulation to the contours of equipment and secure it with 1/2 by 0.015 inch stainless steel bands. Weld pins or stick clips with washers may be used for flat surfaces and spaced a maximum 18 inches apart. Stagger joints and fill voids with insulating cement.
2. Overlap ends of blanket segments to prevent gaps and voids when the piping and equipment are heated.
3. Secure blankets snugly under nuts and bolt heads to assure complete coverage during operation and to prevent vibration-induced gaps or voids.
4. Secure blankets in strict accordance with the manufacturer's instructions.

F. Flashing:
1. Provide flashing at jacket penetrations and terminations. Provide clearance for flashing between insulation system and piping supports.
2. Form aluminum caps to fit over the adjacent jacketing and to completely cover coated insulation. Hold cap in place with a jacket strap.

END OF SECTION

SECTION 40 91 00

PROCESS CONTROL AND INSTRUMENTATION SYSTEMS

PART 1 – GENERAL

1.01 THE REQUIREMENT

A. The Contractor shall furnish, configure, program, install, integrate, pre-commission and startup the entire Process Control and Instrumentation Systems (PCIS) complete and operable, as defined and in accordance with the Contract Documents.

B. The System Integrator will be under contract with the Contractor. The System Integrator will be responsible for:

1. Supply of all instrumentation (wired and non-wired), analyzers, analyzer wet panels, chemical system panels and fill station panels that are not specifically listed as vendor supply – all as specified and/or referenced herein.
2. Supply of all CASSF Main PLC and vendor PLCs' hardware and software components as well as the PLC communication network hardware components, control cabinets, racks, communication cables and software management tools as specified and/or referenced herein.
3. Supply of all workstations, servers, displays, application software and control/server room furniture as specified and/or referenced herein.
4. Factory assembly, configuration, programming, testing (factory and field) and commissioning of the Plant PLC-based control system – hardware and software. The System Integrator will also be responsible for configuration, testing (factory and field) and commissioning of all PLC communication network hardware components and software management tools. The work shall be as specified and/or referenced herein.
5. Through coordination with the Vendor package suppliers, seem-less integration of all Vendor package control systems into the Plant control system. The Contractor shall be responsible for managing the coordination work of the System Integrator and the Vendor package suppliers and for ultimately ensuring delivery of an integrated plant control system as defined and/or referenced herein.
6. DCS and Plant HMI programing modifications listed under Section 40 93 00 Plant Control Philosophy and shown on drawing I-06.
   a. Furnishing of DCS hardware as well as DCS and Plant HMI programming shall be performed by Emerson, no equal under contract to the Contractor.

C. The requirements of this Section apply to all components of the PCIS unless indicated otherwise.

D. The work is located at a green-field site in San Diego, California. The planned CASSF will be capable of treating approximately 0.5 MGD. The facility shall include the following vendor process packages (as detailed in the P&ID drawings):

1. Per Division 46 Spec Section– Membrane System for MBR: One MBR System Vendor Package that will include:
   a. Prefabricated Membrane Basin with membrane filters

   b. Dedicated RAS Pump skid
   c. Dedicated Filtrate / Backwash pump skid
   d. Dedicated Scour Air Blower skid
   e. Dedicated filtrate turbidity analyzer wet panel
   f. Dedicated PLC-based System VCP with integral OIT
2. Per Division 46 Spec Section – Ozone System: One separate Ozone System Vendor Package each including:
   a. Dedicated Dissolution System
   b. Dedicated Generation skid
   c. Dedicated Contactors
   d. Dedicated Off-Gas skid
   e. Dedicated PLC-based System VCP with integral OIT
3. Per Division 46 spec Section– Membrane Filtration System: Two MF System Vendor Packages each including:
   a. MF Vessel Skid with membrane filters
   b. Dedicated MF Feed/CIP and Backwash Pumps
   c. Dedicated Scour Air Blower skid
   d. Dedicated PLC-based System VCP with integral OIT
4. Per Division 46 Spec Section– Ultraviolet Disinfection System: One UV-Disinfection System for Murray and one for San Vicente, including:
   a. Closed vessel UV reactor
   b. Vessel motorized isolation valves
   c. Supporting instrumentation
   d. Dedicated PLC-based System VCP with integral OIT
5. Per Division 46 Spec Section–Reverse Osmosis Systems: Four RO System Vendor Package:
   a. System No.1: One Conventional RO System for Murray and one for San Vicente
   b. System No.2: Closed Circuit Reverse Osmosis
   c. System No.3: Forward-Reversal Reverse Osmosis
   d. Future System No.2: Two-stage RO skid with interstage booster pumps
   e. Each RO System package will include:
      1) Dedicated RO transfer pump
      2) Dedicated RO System
      3) Supporting instrumentation and motorized isolation valves
      4) Dedicated PLC-based System VCP with integral OIT
6. For each of the vendor packages listed above, the Vendor package Supplier will be under contract with the Contractor. The Contractor will ensure that the Vendor package control components are in compliance with the hardware and software supply requirements specified and/or referenced herein to ensure the use of common hardware and software across the facility. The Contractor will also ensure that Vendor developed operator interface screens comply with the project

standards (as detailed in Sections 40 95 20 and 40 93 00). The System Integrator will be responsible for coordination of any inter-PLC IO messaging requirements with the Vendors (i.e. Vendor-to-Vendor or Vendor-to-Plant) as necessary to accommodate the control programming and system integration requirements detailed in Section 40 93 00 – Plant Control Philosophy. The System Integrator will also be responsible for display of the Vendor developed screens at the Plant HMI, ensuring a common look, function, accessibility and means of navigation. The Contractor shall be required to coordinate the effort of the System Integrator with each Vendor.

E. The Contractor will supply the components listed below as "free-issued" to the Vendors (as applicable per package). While the Contractor will be responsible for field assembly, installation, field testing and commissioning, the Vendor will be responsible for factory configuration and witness testing prior to shipment to site for field installation. The Contractor shall also make available during the commissioning phase, qualified controls personnel, capable of supervising system startup. Contractor free-issued components, as shown on the contract drawings and listed in the equipment and instrument schedules, shall include the following:
   1. Variable speed drives.
   2. Direct Online Starters.
   3. Reduced Voltage Soft Starters.
   4. Field E-Stop Local Control Stations.
   5. Vendor mechanical components, manual valves, assorted pipe fittings and cables/conductors (specifically identified as Contractor supplied to support Vendor package installation)
   6. Refer to the contract instrument list, valve lists and equipment lists for supply and install responsibility definition.

F. In support of the above implementation requirements, the Contractor shall strictly coordinate the Work with the City of San Diego by means of regularly scheduled work coordination meetings (provisionally, on a weekly basis). The work coordination meetings shall be attended by representatives of the Contractor, the System Integrator, the City of San Diego, the Engineer and any Vendor the Contractor requires to be in attendance. Meeting minutes shall be collected and distributed by the Contractor in electronic form within one working day of each meeting adjournment. Refer to specification Section 40 93 00 – PLANT CONTROL PHILOSOPHY for additional work coordination requirements.

G. Experience Requirement: The System Integrator, under contract with the Contractor, shall be responsible for procuring, assembling, configuring, programming, factory testing and field commissioning the plant PLC-based control system as described in the contract documents. The Contractor shall be responsible for system installation and operation in accordance with the contract documents and shall provide the services of qualified System Integrator field engineers and installers capable of directing and executing installation, pre-commissioning, and startup activities as it relates to the vendor packages, plant PLC control system equipment and other Contractor free-issued components. The Contractor, through the use of System Integrator personnel shall also coordinate the work of vendor package integration with the balance of plant control system (refer to specification Section 40 93 00 – PLANT CONTROL PHILOSOPHY for additional details). In support of this work responsibility,

the System Integrator shall be required to demonstrate experience at, and capability of, providing similarly sized and complex control systems for Municipal Water or Wastewater Treatment Plants. Experience and capability requirements shall include as a minimum:

1. Experience in furnishing and installing Distributed Control Systems based on the Allen Bradley Logix processors (PLCs) and FactoryTalk software suite for similarly sized control systems for Municipal Water or Wastewater Treatment Plants.
2. A permanently employed in-house staff dedicated to the design, engineering, project management, training, programming, and configuration of PLC equipment, fiber optic communications and managed control system networks. The System Integrator shall have the staff size and experience to provide all required services in a timely and expert manner, as dictated by the Project Construction Schedule.
3. Permanent employment of programmers who have verifiable experience at programming Allen Bradley logix processors (PLCs) and the FactoryTalk control system software package.
4. Experience in furnishing, installing, and testing Modbus networks and Ethernet networks for similarly sized control systems.
5. Successful completion of projects of similar size and type.
6. The Contractor shall submit a resume summary of the Project Manager, Lead Instrumentation / Controls Engineer, the System Network Engineer and all control system programmers anticipated to take part in the project. The resume shall list the education level, training and experience qualifications of the Project Manager (i.e. the person who will serve as the primary decision maker and interface to the Contractor), the Lead I&C Engineer (i.e. the person who will serve as the lead technical decision maker), the System Network Engineer (i.e. the person responsible for the final network architecture and domain assembly, configuration, installation and security) and the control system programmers along with references (with contact numbers) for projects completed. In addition, the following qualifications must be met or exceeded:
   a. The Project Manager shall provide verifiable evidence of management of similar sized projects and/or projects of similar complexity.
   b. The Lead Instrumentation / Controls Engineer shall be an engineer with a minimum degree (Electrical, Mechanical or Chemical Engineering) from a college accredited by the American Consulting Engineering Council as an Engineering College.
   c. The System Network Engineer shall have verifiable qualifications and experience in local and/or wide area networks with Certification in networking and Cisco training and/or LAN certification (Cisco CCNP or CCNA/CCDA and Microsoft MCSE - Server 2012)
7. Where the specification calls for Manufacturers' representative's services, the Contractor's employees will not be accepted as qualified to do the work or be compensated for the services. The Contractor will only be paid for service of representatives that are in direct employment of the equipment manufacturer.

H. Responsibilities

1. The Contractor, through the use of an approved System Integrator and qualified electrical and mechanical installers, shall be responsible for the implementation of the PCIS and the integration of the PCIS, and all the appurtenant Work, being

provided under this Section of these Specifications and the integration of the Control and Instrumentation System and control devices provided under this project all in accordance with the requirements of the Contract Documents. In addition, the System Integrator shall install and place into service the PLC based Control System (PLCS) furnished under Section 40 95 10 – PLC CONTROL SYSTEMS HARDWARE and 40 95 20 – PLC CONTROL SYSTEMS SOFTWARE.

2. Due to the complexities associated with the interfacing of numerous control system devices, it is the intent of these specifications that the System Integrator be responsible to the Contractor for the integration work coordination of all PCIS components – as referenced in Article 1.1-A – as well as existing devices and devices provided under other sections with the objective of providing a completely integrated control system free of signal incompatibilities.
3. As a minimum, the Contractor shall perform the following work:
   a. Installation of the PCIS:
      1) Prepare hardware submittals (including spare parts)
      2) Design, develop, and electronically draft loop drawings, control panel designs and site layouts
      3) Prepare the test plan and sign-off documentation
      4) Prepare the training plan for non-Vendor skid equipment
      5) Procure hardware
      6) Fabricate panels
      7) Perform factory tests on panels
      8) Perform bench calibration and verify calibration after installation
      9) Oversee and certify installation (inclusive of Vendor packages)
      10) Oversee, document, and certify loop testing
      11) Oversee, document, and certify system commissioning
      12) Conduct the performance test
      13) Prepare Owner's manuals
      14) Conduct training classes
      15) Prepare record drawings
      16) Furnish, install, configure and program the laptops, workstations, operator interface units, switches, routers, and plant PLC's to communicate and operate as outlined in the contract documents.
      17) Procure and install control room / server room furniture.
   b. Integration of the PCIS with (existing and new) instrumentation, Vendor skid packages and control devices being provided under other sections:
      1) Prepare and maintain schedule of installation and integration activities to support integration work between the Vendors and the System Integrator.
      2) Develop all requisite loop drawings and record loop drawings associated with equipment provided under other Divisions of these Specifications, Owner-furnished equipment, and existing equipment.
      3) Host and minute regular coordination meetings involving all concerned parties including the System Integrator, the Engineer, The City of San Diego and the Vendor(s) as applicable.

4) Resolve signal, power, or functional incompatibilities between the PCIS and interfacing devices (existing and new).

1.02 CONTRACTOR AND VENDOR SUBMITTALS

A. General: Submittals shall be furnished in accordance with Section 01 33 00 - SUBMITTAL PROCEDURES and the following:

1. The Contractor shall coordinate the instrumentation work so that the complete instrumentation and control system will be provided and will be supported by accurate shop drawings and record drawings.
2. Exchange of Technical Information: During the period of preparation of these submittals, the Contractor shall authorize a direct, informal liaison with the Engineer for exchange of technical information. As a result of this liaison, certain minor refinements and revisions in the systems as indicated may be authorized informally by the Engineer but will not alter the scope of work or cause increase or decrease in the Contract Price. During this informal exchange, no oral statement by the Engineer shall be construed to give approval of any component or method, nor shall any statement be construed to grant exception to or variation from these Contract Documents.
3. Symbology and Nomenclature: In these Contract Documents, all systems, all meters, all instruments, and all other elements are represented schematically, and are designated by symbology as derived from Instrument Society of America Standard ANSI/ISA S5.1-Instrumentation Symbols and Identification. The nomenclature and numbers designated herein and, on the Drawings, shall be employed exclusively throughout shop drawings, and similar materials. No other symbols, designations, or nomenclature unique to the manufacturer's standard methods shall replace those prescribed above, used herein, or on the Drawings.

B. Pre-Submittal Conference:

1. The Contractor shall arrange and conduct a Pre-Submittal Conference within 45 days after award of the contract. The purpose of the Pre-Submittal Conference is to review and approve the manner in which the Contractor intends to carry out its responsibilities for shop drawing submittal on the Work to be provided under this Section. The Contractor, the System Integrator, The City of San Diego's representative(s) and the Engineer shall attend. Both the Contractor and the Engineer may invite additional parties at their discretion.
2. The Contractor shall allot one, 8-hour day for the Conference.
3. The Contractor shall present the following for discussion at the Conference.
   a. A list of equipment and materials understood to be required for the PCIS with supply responsibility identified, proposed installation schedule and any installation/testing work concerns noted for discussion. For each proposed item, the make and model number shall also be provided.
   b. A list of proposed clarifications to the contract documents along with a brief explanation of each. Resolution shall be subject to a separate formal submittal and review by the Engineer.
   c. An exact one-to-one sample of each type of submittal specified herein.
   d. A commented version of the network block diagrams indicating questions, concerns or comments regarding the proposed installation work. Include proposed schedule for Network Coordination Workshop (as detailed in

Specification Section 40 95 10 – PLC-BASED CONTROL SYSTEMS HARDWARE).

e. A detailed description of plans to coordinate integration of each vendor control package into the plant control system.

f. Sample water treatment plant control screens which depict the quality of graphics and overall presentation of the HMI interface to be developed for this project (reference Section 40 95 20 PLC-BASED CONTROL SYSTEM SOFTWARE Appendix for sample control screen quality description).

g. Preliminary overview of the proposed Windows domain configuration, Server configuration and firewall configuration to support remote user access via secure VPN.

h. A bar-chart type schedule for all system related activities from the Pre-Construction Conference through commissioning and training. Dates of submittals, design, fabrication, programming, factory testing, deliveries, installation, field testing, and training shall be shown. The schedule shall be subdivided to show activities relative to each major item or group of items when everything in a given group is on the same schedule.

i. An overview of the proposed training plan (for non-vendor skid equipment). The City of San Diego's representatives and the Engineer will review the overview and may request changes. All changes to the proposed training shall be resolved at the pre-submittal conference. The overview shall include the following for each proposed course.

   1) Course title and objectives.
   2) Prerequisite training and experience of attendees.
   3) Course content – a topical outline.
   4) Course duration.
   5) Course format – lecture, laboratory demonstration, etc.

j. Based on equipment approved for supply and the contract document requirements, furnish a proposed list of status and control points to be transmitted over the field networks as required for intelligent variable speed drives and chemical metering pump modules. A separate discussion shall be held to determine the identity of points (any combination of analog, discrete and alarm points) that will be collected from the power monitors, protection relay modules and analyzers for monitoring by the plant control system. An initial I/O reference list for the power monitors, drives and analyzers has been provided in Section 40 93 00 (Miscellaneous Controls Appendix) to aid discussion

4. The Contractor shall take minutes of the Conference, including all events, questions, resolutions and planned meeting schedules. An electronic draft version of the meeting minutes shall be circulated within 2 working days of meeting adjournment, to all in attendance, for comment prior to final distribution.

C. Shop Drawings:

1. General:

   a. Preparation of shop drawings shall not commence until adjournment of the Pre-submittal Conference.

b. All shop drawings shall include the letter head or title block of the Contractor. The title block shall include, as a minimum, the Contractor's registered business name and address, project name, drawing name, revision level, and personnel responsible for the content of the drawing. The quantity of submittal sets shall be as indicated in the General Provisions.

c. Organization of the shop drawing submittals shall be compatible with eventual submittals for later inclusion in the Owner's Manual. Submittals not so organized and incomplete submittals for any given loop or site will not be accepted.

d. Shop drawing information shall be bound in standard size, 3-ring, loose-leaf, vinyl plastic, hard cover binders suitable for bookshelf storage. Binder ring size shall not exceed 3 inches.

e. Interfaces between any new instruments, motor starters, VFD units, actuators, flow meters and other equipment related to the PCIS shall be included in the shop drawing submittal.

2. Hardware Submittal: For Vendor furnished equipment, the Vendor shall be responsible for managing hardware submittals associated with all vendors furnished equipment (skid mounted or shipped loose) as detailed herein, with submittal dates as dictated by the Contractor to meet the project submittal and overall Construction Schedule. For Contractor furnished equipment, the Contractor shall submit a hardware submittal as a complete bound package at one time within 45 calendar days after the commencement date stated in the Notice to Proceed including:

   a. A complete index which lists each device by tag number, type, and Manufacturer. A separate technical brochure or bulletin shall be included with each instrument data sheet. The data sheets shall be indexed in the submittal by systems or loops, as a separate group for each system or loop. If, within a single system or loop, a single instrument is employed more than once, one data sheet with one brochure or bulletin may cover all identical uses of that instrument in that system. Each brochure or bulletin shall include a list of tag numbers for which it applies. System groups shall be separated by labeled tags.

   b. Fully executed project standard data sheets for each component, together with a technical product brochure or bulletin. The technical product brochures shall be complete enough to verify conformance to all Contract Document requirements.

   c. Flow meter-sizing calculations: Calculations shall be submitted on the Instrument Manufacturer letterhead and shall include the following:

      1) Proposed meter size based on indicated minimum, maximum and average flow rates.

      2) Guaranteed meter accuracy based on the upstream and downstream straight runs associated with the location of each meter.

      3) Permanent head loss associated with each meter.

      4) Flow vs. differential pressure curves for all head-type devices. For compressible fluids, curves shall be pressure and temperature compensated.

      5) References to ASME and/or ISA standard equations used.

6) Values used for all parameters used in calculations.

d. Priced list of all spare parts for all devices.

e. Instrument installation, mounting, and anchoring details shall be submitted in an electronically generated (AutoCAD) hard copy format. Each instrument shall have a dedicated 8½-inch × 11-inch detail, which only pertains to the specific instrument by tag number. Each detail shall be certified by the instrument manufacturer that the proposed installation is in accordance with the instrument manufacturer's recommendations and is fully warrantable. These certifications shall be embedded in the CAD files and shall also appear as a stamp on the hard copies. As a minimum, each detail shall have the following contents.

1) Show all necessary sections and elevation views required to define instrument location by referencing tank, building or equipment names and numbers, and geographical qualities such as north, south, east, west, basement, first floor, etc.

2) Ambient temperature and humidity of the environment that the instrument is to be installed in.

3) Corrosive qualities of the environment that the instrument is to be installed in.

4) Hazardous rating of the environment that the instrument is to be installed in.

5) Process line pipe or tank size, service and material.

6) Process taps elevation and location.

7) Upstream and downstream straight pipe lengths between instrument installation and pipe fittings and valves.

8) Routing of tubing and identification of supports.

9) Mounting brackets, stands, and anchoring devices.

10) Conduit entry size, number, location, and delineation between power and signal.

11) Nema ratings of enclosures and all components.

12) Clearances required for instrument servicing.

13) List itemizing all manufacturer makes, model numbers, quantities, lengths required, and materials of each item required to support the implementation of the detail.

NOTE**:** Contract instrument installation detail drawings may also be directly referenced with exceptions or additions as necessary to effect proper installation per the manufacturer's requirements and as required to support the application. Submittals lacking an installation detail reference shall be considered incomplete and therefore unacceptable.

3. Project-Wide Loop Drawing Submittal: The Contractor shall furnish a Project-wide Loop Drawing Submittal (PLDS) which completely defines and documents the contents of each monitoring, alarming and interlock control loop associated with (non-Vendor skid) equipment provided under Division 40 sections, equipment provided under sections in other Divisions, and Owner or existing equipment which is to be incorporated into the PCIS. The PLDS shall be a singular complete bound package electronically drafted in AutoCad.

4. Vendor Loop Drawing Submittal (for each vendor package system only): The Vendor shall furnish a Vendor Package Loop Drawing Submittal (VPLDS) which completely defines and documents the contents of each monitoring, alarming and interlock control loop associated with the package equipment provided – skid mounted and shipped loose. For each package, the VPLDS shall be a singular complete bound package electronically drafted in AutoCAD
5. The PLDS and VPLDS packages shall be submitted within 120 days after contract award, and shall include the following:
   a. A complete index in the front of each bound volume. The loop drawings shall be indexed by system or process areas. All loops shall be tagged in a manner consistent with the Contract Documents (reference the contract I/O list for complete tag numbers). Loop drawings shall be submitted for every analog and discrete monitoring and control loop.
   b. For clarity, the PLDS and VLDS drawings are intended to be wiring diagrams which illustrate the complete wiring arrangement of every analogue, discrete and field-networked instrument. The diagrams shall show and identify each component of each instrument loop – from the PLC I/O address through to the instrument sensor and remote display – using legend and symbols from ANSI/ISA S5.4 – Instrument Loop Drawings, with format as shown on the General I&C Drawings. Each loop diagram shall be drawn on a separate drawing sheet with no more than 10 loops per drawings. The loop drawings shall also indicate any software modules and linkages. In addition, the loop diagrams shall also show the following details:
      1) Functional name of each loop.
      2) Reference name, drawing, and loop diagram numbers for any signal continuing off the loop diagram sheet.
      3) Panel and breaker numbers for all power feeds to the loops and instrumentation.
      4) Designation, and if appropriate, terminal assignments associated with every pullbox, junction box and panel through which the loop circuits pass.
      5) Vendor panel, instrument panel, junction boxes, equipment and PLC terminations, termination identification wire numbers and colors, power circuits, and ground identifications.
      6) Installation and wiring of instrument, I/O surge protection devices, isolators, and intrinsically safe barriers.
   c. Itemized instrument summary: The Contract instrument summary schedule (inclusive of Contract Document represented vendor system designs) shall be as furnished by the Engineer as part of the Contract Documents for use by the Contractor, System Integrator and Vendors. Non-vendor furnished instruments (including actuated valves) shall have the listed schedule fields pre-populated as appropriate. Updated, revision-controlled instrument schedules shall be electronically forwarded by the Contractor to the Engineer with each major update resulting from receipt of complete certified Vendor data package. The instrument summary schedule, prepared in Microsoft Excel, shall list key attributes of each instrument provided under this Contract. As a minimum, attributes shall include:

1) Tag number. (Engineer populated)
2) P&ID drawing number. (Engineer populated)
3) Service description. (Engineer populated)
4) Installation detail reference. (Engineer populated)
5) I/O type. (Engineer populated)
6) Pipeline number. (Engineer populated)
7) Power supply requirements.
8) Status.
9) Datasheet reference.
10) Location. (Engineer populated)
11) Location drawing number. (Engineer populated)
12) Instrument type. (Engineer populated)
13) Instrument type Description. (Engineer populated)
14) Manufacturer.
15) Model number.
16) Misc. comments field.

6. Test Procedure Submittals:
   a. The Contractor shall submit the proposed procedures to be followed during tests of the PCIS and its components to The City of San Diego and the Engineer.
   b. Preliminary Submittal: Outlines of the specific proposed tests and examples of proposed forms and checklists.
   c. Detailed Submittal: After approval of the Preliminary Submittal by The City of San Diego and the Engineer, the Contractor shall submit the proposed detailed test procedures, forms, and checklists. This submittal shall include a statement of test objectives with the test procedures.
   d. Vendor package control system test procedures, as submitted by the Vendor, shall be subject to the factory and field-testing requirements detailed herein and Section 40 95 10 – PLC-BASED CONTROL SYSTEMS HARDWARE.
7. Training Submittals: Subsequent to the receipt of The City of San Diego's and Engineer's inputs made at the Pre-submittal Conference, the Contractor shall submit a training plan that includes:
   a. A re-submittal of the training plan overview from the Pre-submittal Conference with incorporation of all modifications agreed upon at that meeting.
   b. Schedule of training courses including dates, duration, and location of each class.
   c. Resumes of the instructors who will actually implement the plan.
8. Control Room Equipment Layouts: A scaled equipment layout drawing shall be developed for each room. The drawings shall detail the location of the existing or Owner furnished equipment and new equipment along with proposed conduit/cable-tray routing, floor penetrations and junction box placement.

D. Owner’s Manual (for Contractor and Vendor submittal):

1. General: Information in the Owner's Manual shall be based upon the approved shop drawing submittals as modified for conditions encountered in the field during the work.
2. The Owner's Manual shall have the following organization for each process:
   a. Section A – Process and Instrumentation Diagrams.
   b. Section B – Loop Descriptions.
   c. Section C – Loop Drawings.
   d. Section D – Detailed Electrical Control Schematics.
   e. Section E – Site Equipment Layouts.
   f. Section D – Instrument Summary.
   g. Section E – Instrument Data Sheets (with factory calibration data).
   h. Section F – Sizing Calculations.
   i. Section G – Instrument Installation Details.
   j. Section H – Test Results.
   k. Fully commented copy of each PLC program (to be inserted after successful completion of the Performance Test).
   l. Section J – HMI Graphic Control Screens (to be inserted after successful completion of the Performance Test).
3. Signed results from Site Inspection/Loop Testing, Pre-commissioning, and Performance Testing shall be included in Section H.
4. Section J shall include all of the following:
   a. A list of the control and trend screens with the display names and description. It shall also provide a summary of possible commands and operator inputs to these screens including setpoints. Descriptions of all control actions shall be included.
   b. A complete control system diagram (including all control, operator interface and network components) with names and locations of major components.
   c. A letter sized, color copy of all vendor package control and trend screens developed or modified under this contract.
5. Following the Engineer's and The City of San Diego's review, one set will be returned to the Contractor and/or associated Vendor with compiled comments. The Manuals shall be revised and amended as required and the final Manuals shall be submitted 15 days prior to start-up of plant systems.

E. Record Drawings: The Contractor shall keep current a set of complete loop and schematic diagrams which shall include all field and panel wiring, piping and tubing runs, routing, mounting details, point-to-point diagrams with cable, wire, tube and termination numbers. These drawings shall include all instruments and instrument elements. Record documents shall be submitted in 11x17 hardcopy format and in electronic format (native AutoCad with Adobe pdf copy) on DVD or USB flash-drive media – two copies each. Record drawings shall be submitted to the Engineer for review after completion of all Pre-commissioning tasks but prior to Performance Testing. Sections of the work (inclusive of the entire package) deemed to be unacceptable by the reviewing Engineer shall be returned to the Contractor for correction/completion.

1.03 SPECIAL WARRANTY REQUIREMENTS

A. Extended Period for Correction of Defects: The Contractor shall be required to correct all defects in the PCIS, upon notification from The City of San Diego, over the course of the entire construction period plus an additional two year period from the date of project Final Acceptance. Problems that halt the operation of critical systems and equipment or restrict primary design functions shall be responded to within four hours of initial notification by a qualified control system technician or certified manufacturer representative and corrected within (3) calendar days after notification. The critical systems include the following:

1. Failure of main CASSF PLC processor
2. Historian failure or I/O server failure
3. Loss of Operator SCADA workstation or operator interface unit
4. Domain Controller Failure
5. Remote Access System Failure
6. MBR System VCP Failure
7. MF System VCP Failure
8. RO System VCP Failure
9. UV-AOP System VCP Failure
10. Any PLC or RIO problem that cannot be corrected by replacing an I/O card.
11. Any network, fiber optic, switch, transceiver problem that inhibits server, workstation, field network or PLC communication.

B. All other problems including instrument and equipment failure shall be responded to within two days by sending a manufacturer qualified technician to the site to correct the problem.

C. The Contractor shall pay all air freight, equipment, and labor costs, as well as any other costs necessary to expedite the correction of the problem(s).

PART 2 – PRODUCTS

2.01 GENERAL

A. Code and Regulatory Compliance: PCIS WORK shall conform to or exceed the applicable requirements of the National Electrical Code. Conflicts between the requirements of the Contract Documents and any codes or referenced standards or specifications shall be resolved per General Requirements and General Conditions.

B. Current Technology: Meters, instruments, and other components shall be the most recent field-proven models marketed by their manufacturers at the time of submittal of the shop drawings unless otherwise required to match existing equipment.

C. Hardware Commonality: Instruments which utilize a common measurement principle (for example, d/p cells, pressure transmitters, level transmitters which monitor hydrostatic head) shall be furnished by a single Manufacturer. All panel mounted instruments shall have matching style and general appearance. Instruments

performing similar functions shall be of the same type, model, or class, and shall be from a single Manufacturer.

D. Loop Accuracy: The accuracy of each instrumentation system or loop shall be determined as a probable maximum error; this shall be the square-root of the sum of the squares of certified “accuracies” of the designated components in each system, expressed as a percentage of the actual span or value of the measured variable. Each individual instrument shall have a minimum accuracy of plus and minus 0.5 percent of full scale and a minimum repeatability of plus and minus 0.25 percent of full scale unless otherwise indicated. Instruments which do not conform to or improve upon these criteria are not acceptable.

E. Instrument and Loop Power: Power requirements and input/output connections for all components shall be verified. Power for transmitted signals shall, in general, originate in and be supplied by the control panel devices. The use of smart “2-wire” HART compatible transmitters is preferred. Use of “4-wire” transmitters shall be minimized; however, if required, 24Vdc is the preferred supply approach with 120Vac only used where no alternative exists. Individual loop or redundant power supplies shall be provided as required by the Manufacturer’s instrument load characteristics to ensure sufficient power to each loop component. Power supplies shall be mounted within control panels; power supplies field installed at the point of application shall only be used where specifically authorized in writing by the Engineer.

F. Instrument Air: Dry, filtered, oil-free control air shall be piped to all field instruments and instrument panels requiring air. Nominal supply air pressure shall be as indicated on the air compressor P&IDs. Each field instrument shall be provided with an integral, non-adjustable filter/regulator assembly to provide regulated air. Each instrument panel requiring air shall be provided with an adjustable filter/regulator assembly with gauge and an air manifold to provide air to pneumatic instruments. Air shall be filtered to 5-micron maximum particle size. Pressure reducers and regulators shall be furnished with additional instrumentation as required. Refer to the instrument installation details for air manifold material selection and installation requirements.

G. Loop Isolators and Converters: Signal isolators shall be provided as required to ensure adjacent component impedance match where feedback paths may be generated, or to maintain loop integrity during the removal of a loop component. Dropping precision wire wound resistors shall be installed at all field side terminations in the control panels to ensure loop integrity. Signal conditioners and converters shall be provided where required to resolve any signal level incompatibilities or provide required functions.

H. Environmental Suitability: All indoor and outdoor control panels and instrument enclosures shall be suitable for operation in the ambient conditions associated with the locations designated in the Contract Documents. Heating, cooling, and dehumidifying devices shall be provided in order to maintain all instrumentation devices within 20% of the minimums and maximums of their rated environmental operating ranges. The Contractor shall provide all power wiring for these devices. Enclosures suitable for the environment shall be furnished. All instrumentation in hazardous areas shall be suitable for use in the particular hazardous or classified location in which it is to be installed. Instruments exposed to direct sunlight shall be supplied with manufacturer approved sunshields.

I. Signal Levels: Analog measurements and control signals shall be as indicated herein, and unless otherwise indicated, shall vary in direct linear proportion to the measured variable. Electrical signals outside control panels shall be 4 to 20mAdc except as indicated. Signals within enclosures may be 1 to 5 volts dc. Electric signals shall be electrically or optically isolated from other signals. Pneumatic signals shall be 3 to 15 psig with 3 psig equal to 0% and 15 psig equal to 100%.

J. Control Panel Power Supplies: Unless specifically indicated otherwise, control panels shall be provided with redundant power supplies which are configured in a fault-tolerant manner to prevent interruption of service upon failure and interruption of service necessitated by the replacement of a power supply. Each power supply shall be sized to accommodate the full load indicated plus have an excess rated capacity of 40 percent. The failure of a power supply shall be annunciated at the control panel and repeated to the main control room via the associated control system communication network.

K. Alternative Equipment and Methods: Equipment or methods requiring redesign of any project details are not acceptable without prior written approval of the Engineer through the “or equal” process of the Contract General Conditions and Section 01 30 00 – SUBMITTAL PROCEDURES. Any proposal for approval of alternative equipment or methods shall include evidence of improved performance, operational advantage and maintenance enhancement over the equipment or method indicated or shall include evidence that an indicated component is not available.

L. Lightning and Surge Arrestors:
   1. A lightning and surge arrestor (LSA) shall be provided to protect the electronic instrumentation system from induced surges propagating along the analog and discrete signal and power supply lines. The protection systems shall be such that the protective level shall not interfere with normal operation but shall be lower than the instrument surge withstand level and be maintenance-free and self-restoring. The LSA shall be housed in a suitable metallic case, properly grounded. Ground wires for all surge protectors shall be connected to a good earth ground and where practical, each ground wire run individually and insulated from each other.
   2. Protection of field analog, discrete, digital and telemetered signal lines shall be provided as required. LSA devices shall be installed as close to the instrument being protected as possible. The units shall be manufactured by Emerson (EDCO) Incorporated of Florida, Ocala, Florida or approved equal.
   3. Where signal lines enter or leave control rooms, buildings, etc., through an interface cabinet, the protection devices shall be mounted in the interface cabinet. Protection shall be with the combined use of gas tube surge arrestor and Zener diode protectors, MOV’s and capacitors. The LSA shall be modular and plug-in type with an indicator to show LSA status. The LSA shall be compatible with the terminal blocks. The terminal block surge arrestors shall be as manufactured by Emerson (EDCO), WAGO, Phoenix Contact or approved equal.

2.02 OPERATING CONDITIONS

A. The PCIS shall be designed and constructed for satisfactory operation and long, low maintenance service under the following conditions:
   1. Environment – Wastewater treatment environment with corrosive gases present.

2. Temperature Range – 0 through 42 degrees C.
3. Thermal Shock – 1 degree C per minute, max.
4. Relative Humidity – 20 through 95 percent, non-condensing.

2.03 SPARE PARTS AND SPECIAL TOOLS

A. The Contractor shall furnish the following items in the indicated quantities:
   1. One spare for each type of PLC Input/Output module supplied and one spare Input/Output module for every 10 supplied.
   2. One spare for each type of PLC communication module supplied.
   3. Two spare 24VDC power supplies.
   4. Quantity of spare terminal block relays – 20% of total field supply.
   5. Quantity of spare ice cube relays – 20% of total field supply.
   6. Quantity of spare interposing relays – 20% of total field supply.
   7. Quantity of spare fuses – 20% of total field supply.
   8. Quantity of spare corrosion inhibitor capsules – 12 total
   9. Contractor shall also furnish the following expendables:
      a. Pack of 500 sheets of printer paper
      b. One spare B/W printer cartridge
   10. One fiber optic cable test kit: Fluke Fiber Optic Cable Tester Model DSP-4000 or manufacturer recommended and approved equal with fiber test kit (DSP-FTK) including 1300-ST, 850-ST and FM-ST accessories. Tester shall include connectors for 62.5 micron and 50-micron cable.
   11. One complete fiber optic splicing kit. The kit shall include all necessary tools to strip the cable, polish the fiber, cement the connector to the fiber and inspect the fiber. Fiber kit shall be as manufactured by Methode Electronics/Optokon or Ultra Electronics (Weed Fiber-Optics) or approved equal.

B. Additional spare parts and special tools as recommended by the Vendors.

C. All furnished special tools and spare parts shall be submitted before startup commences, suitably wrapped, and identified.

2.04 FACTORY TESTING

A. The Contractor shall arrange for the various Vendors and the System Integrator to allow the Engineer to inspect and witness the testing of the supplied equipment at the site of fabrication. Equipment shall include the control cabinets, control system network communication systems, special control systems, and other pertinent systems and devices. Reference Section 40 95 10 Paragraph 3.2 – PLC-Based Control Systems Hardware for factory test scheduling, setup, execution and documentation requirements. A minimum of fifteen working days notification shall be provided to the Engineer prior to testing. No shipments to the Work site shall be made prior to the Factory Test without the Engineer's written approval.

2.05 INSTRUMENT AND I/O LIST

B. A complete instrument schedule is attached to this specification as Appendix A.

C. A complete I/O schedule is attached to this specification as Appendix B.

PART 3 – EXECUTION

3.01 PRODUCT HANDLING

A. Shipping Precautions: After completion of shop assembly, factory test, and approval, all equipment, cabinets, panels, and consoles shall be packed in protective crates and enclosed in heavy duty polyethylene envelopes or secured sheeting to provide complete protection from damage, dust, and moisture. Dehumidifiers shall be placed inside the polyethylene coverings. The equipment shall then be skid-mounted for final transport. Lifting rings shall be provided for moving without removing protective covering. Boxed weight shall be shown on shipping tags together with instructions for unloading, transporting, storing, and handling at the job site.

B. Special Instructions: Special instructions for proper field handling, storage, and installation required by the Manufacturer shall be securely attached to each piece of equipment prior to packaging and shipment.

C. Tagging: Each component shall be tagged to identify its location, instrument tag number, and function in the system. A permanent stainless steel or other non-corrosive material tag firmly attached and permanently and indelibly marked with the instrument tag number, as given in the I/O tabulation, shall be provided on each piece of equipment in the PCIS. Identification shall be prominently displayed on the outside of the package.

D. Storage: Equipment shall not be stored outdoors. Equipment shall be stored in dry air-conditioned storage, including in-line equipment, and shall be adequately protected against mechanical injury. If any apparatus has been damaged, such damage shall be repaired by the Contractor at no additional cost to The City of San Diego. If any electronic equipment has been subject to possible water damage, it shall be replaced as directed by the Engineer.

3.02 MANUFACTURER'S SERVICES

A. The Contractor shall furnish the following Manufacturer's services for the instrumentation and control modules listed below:
   1. Perform bench calibration
   2. Oversee installation
   3. Verify installation of installed instrument
   4. Certify installation and reconfirm Manufacturer's accuracy statement
   5. Oversee loop testing, prepare loop validation sheets, and certify loop testing
   6. Oversee pre-commissioning, prepare pre-commissioning validation sheets, and certify pre-commissioning
   7. Train The City of San Diego's personnel

B. Manufacturer's services: In addition to requirements detailed in other sections, for each listing below, manufacturer onsite field services shall be reserved (at no

additional cost) for the time periods indicated or, where no time period is specified, to complete the services described.

1. Magmeters and Coriolis flow meters in process streams which relate to process control, mass balance calculations and billing of customers – 3 days.
2. Thermal mass flow measurement systems – 2 days.
3. Thermal flow switch – verify proper installation and trip setting.
4. All level detection and measurement systems (Ultrasonic, radar, capacitance, conductance, vibronic and differential pressure) – 3 days.
5. All process analyzers – confirmation of proper installation and calibration verification (witnessed by the Engineer). Manufacturer field inspection and test reports shall be submitted to the Engineer upon task completion.
6. Allen Bradley PLC (hardware and programming software installation, configuration, and integration per design requirements) – 5 days.
7. All smart (Ethernet/IP enabled) chemical metering pumps and VFD units – verify installation, local and network communications, and equipment responsiveness to control signals per contract installation and performance requirements.
   a. VFD Ethernet/IP communication links shall also be independently inspected, and network performance verified per service item 7.
8. Prior to performance testing, the Contractor shall arrange the services of authorized (and currently certified) Cisco field technicians to conduct an independent review of the final network installation configuration for correctness of installation/configuration and adherence to all requirements of the contract documents. The technician's final inspection report shall be submitted to the Engineer and The City of San Diego.
9. Prior to performance testing, the Contractor shall arrange for the final network domain and server OS configurations to be independently reviewed by a currently certified MSCE for correctness of installation/configuration and adherence to all requirements of the contract documents. The MSCE's final inspection report shall be submitted to the Engineer and The City of San Diego.

3.03 INSTALLATION

A. General:

1. Instrumentation, including instrumentation furnished under other Divisions, shall be installed under Division 40 per the manufacturers' instructions.
2. Equipment Locations: The monitoring and control system configurations indicated are diagrammatic. The locations of equipment are approximate. The exact locations and routing of wiring and cables shall be governed by structural conditions and physical interferences and by the location of electrical terminations on equipment. Equipment shall be located and installed so that it will be readily accessible for operation and maintenance. Where job conditions require reasonable changes in approximated locations and arrangements, or when The City of San Diego exercises the right to require changes in location of equipment which do not impact material quantities or cause material rework, the Contractor shall make such changes without additional cost to The City of San Diego.

B. Conduit, Cables, and Field Wiring:
   1. All conduits shall be provided under Division 26 without delay to the WORK of Division 40.
   2. All 4-20 mA signal circuits, process equipment control wiring, signal wiring to field instruments, PLC input and output wiring and other field wiring and cables shall be provided under Division 26.
   3. All PLC/Server/Workstation equipment cables, fiber optic cables, network cables and communication cables (Ethernet Cat5e/6 UTP and Industrial RS-232/485 cables) shall be provided under Division 40.
   4. All terminations and wire identification at PCIS equipment furnished under this or any other Division shall be provided under Division 40.
   5. All wires from field instruments and power supplies shall be under Division 26. All other terminations shall be under Division 40.

C. Instrumentation Tie-Downs: All instruments, control panels, and equipment shall be anchored by methods which comply with high wind, tornado and/or hazardous weather requirements which apply to the site.

D. Ancillary Devices: The Contract Documents show all necessary conduit and instruments required to make a complete instrumentation system. The Contractor shall be responsible for providing any additional or different type connections as required by the instruments and specific installation requirements at no additional cost to The City of San Diego. All such additions and all such changes, including the proposed method of installation, shall be submitted to the Engineer for approval prior to commencing the work. Such changes shall not be a basis of claims for extra work or delay.

E. Installation Criteria and Validation: Field-mounted components and assemblies shall be installed and connected according to the requirements below:
   1. Installation personnel have been instructed on installation requirements of the Contract Documents.
   2. Technical assistance is available to installation personnel at least by telephone.
   3. Installation personnel have at least one copy of the approved shop drawings and data.
   4. Instrument process sensing lines shall be installed in conduit under Section 26 05 00 – Common Results for Electrical. Individual tubes shall run parallel and near the surfaces from which they are supported. Supports shall be used at intervals of not more than 3 feet of rigid tubing.
   5. Bends shall be formed to uniform radii with the proper tool without deforming or thinning the walls of the tubing. Plastic clips shall be used to hold individual plastic tubes parallel. Ends of tubing shall be square-cut and cleaned before being inserted in the fittings. Bulkhead fittings shall be provided at all panels requiring pipe or tubing entries.
   6. Differential pressure elements shall have three valve manifolds.
   7. Flexible cables and capillary tubing shall be installed in flexible conduits. The lengths shall be sufficient to withdraw the element for periodic maintenance.
   8. Power and signal wires shall be terminated with crimped type lugs.

9. Connectors shall be, as a minimum, watertight.
10. Wires shall be mounted clearly with an identification tag that is of a permanent and reusable nature.
11. Wire and cable shall be arranged in a neat manner and securely supported in cable groups and connected from terminal to terminal without splices unless specifically approved by the Engineer. All wiring shall be protected from sharp edges and corners. Wires within cabinets shall be neatly bundled and routed in covered wireways. Approved splicing if any, shall be in above ground water-tight boxes.
12. Care is taken to avoid crossing power and signal wires at the field termination point.
13. Mounting stands and bracket materials and workmanship shall comply with requirements of the Contract Documents.
14. Verify the correctness of each installation, including polarity of electric power and signal connections and making sure all process connections are free of leaks. The Contractor shall certify in writing that for each loop or system checked out, all discrepancies have been corrected.
15. The City of San Diego will not be responsible for any additional cost of rework attributable to actions of the Contractor.

3.04 CALIBRATION

A. General: All devices provided under Division 40 shall be calibrated according to the manufacturer's recommended procedures to verify operational readiness and ability to meet the indicated functional and tolerance requirements.

B. Calibration Points: Each instrument shall be calibrated at 0, 25, 50, 75 and 100% of span using test instruments to simulate inputs. The test instruments shall have accuracies traceable to the National Institute of Standards and Testing.

C. Bench Calibration: Instruments which have been bench-calibrated shall be examined in the field to determine whether any of the calibrations are in need of adjustment. Such adjustments, if required, shall be made only after consultation with the Engineer.

D. Field Calibration: Instruments which were not bench-calibrated shall be calibrated in the field to ensure proper operation in accordance with the instrument loop diagrams or specification data sheets.

E. Analyzer Calibration: Each analyzer system shall be calibrated and tested as a workable system after installation. Testing procedures shall be directed by the manufacturers' technical representatives. Samples and sample gases shall be furnished by the manufacturers.

F. Calibration Sheets: Instrument calibration data shall be recorded on calibration forms furnished by the Contractor. Each instrument calibration form shall require (as a minimum) input of the following information and a space for sign-off on individual items and on the completed unit:
   1. Project name.
   2. Loop number.
   3. Tag number.

4. Manufacturer.
5. Model number.
6. Serial number.
7. Calibration range.
8. Calibration data: Input, output, and error at 0 percent, 25 percent, 50 percent, 75 percent and 100 percent of span.
9. Switch setting, contact action, and dead band for discrete elements.
10. Sensing tube leak detection test result (performed at maximum process pressure).
11. Space for comments.
12. Space for sign-off by Contractor/Vendor and date.
13. Test equipment used and associated serial numbers.

G. Calibration Tags: A calibration and testing tag shall be attached to each piece of equipment or system at a location determined by the Engineer. The Contractor shall sign the tag when calibration is complete, and the calibration and testing has been accepted.

3.05 LOOP TESTING

A. General: The Contractor shall notify the Engineer of scheduled tests a minimum of 30 days prior to the estimated completion date of installation and wiring of the PCIS. The Contractor and/or Vendor shall submit a factory updated version of the wiring diagrams for Engineer review and approval prior to loop testing commencement. After the Engineer's review of the submitted loop diagrams for correctness and compliance with the specifications, loop testing of the associated systems shall proceed. The loop checks shall be witnessed by the Engineer.

B. Control Valve Tests: All control valves, cylinders, drives and connecting linkages shall be stroked from the operator interface units as well as local control devices and adjusted to verify proper control action, hand switch action, limit switch settings, torque settings, remote control actions, and remote feedback of valve status and position. Control valve actions and position settings shall be checked with the valves in place to ensure that no changes have occurred since the bench calibration.

C. Interlocks: All hardware and software interlocks between the instrumentation and the motor control circuits, control circuits of variable-speed controllers and packaged equipment controls shall be checked to the maximum extent possible.

D. Instrument and Instrument Component Validation: Each instrument shall be field tested, inspected, and adjusted to its indicated performance requirement in accordance with its Manufacturer's specifications and instructions. Any instrument which fails to meet any Contract requirement, or, in the absence of a Contract requirement, any published manufacturer performance specification for functional and operational parameters, shall be repaired or replaced, at the discretion of the Engineer.

E. Loop Validation: Controllers and electronic function modules shall be field tested and exercised to demonstrate correct operation. All control loops shall be checked under simulated operating conditions by impressing input signals at the primary control elements and observing appropriate responses of the respective control and

monitoring elements, final control elements, and the graphic displays associated with the control system. Actual signals shall be used wherever available. Following any necessary corrections, the loops shall be retested. Accuracy tolerances for each analog network are defined as the root-mean-square (RMS) summation of individual component accuracy requirements. Individual component accuracy requirements shall be as indicated by Contract requirements or by published manufacturer accuracy specifications whenever Contract accuracy requirements are not indicated. Each analog network (i.e., each 4-20mA or field network instrument) shall be tested by applying simulated analog or discrete inputs to the first element of an analog network. For networks which incorporate analog elements, simulated sensor inputs corresponding to 0, 25, 50, 75 and 100% of span shall be applied, and the resulting element outputs monitored to verify compliance with the calculated RMS summation accuracy tolerance requirements. Continuously variable analog inputs shall be applied to verify the proper operation and setting of discrete devices. Provisional settings shall be made on controllers and alarms during analog loop tests. Analog loop test data shall be recorded on test forms to be provided by the Contractor.

F. Loop Validation Sheets: The Contractor shall prepare loop confirmation sheets for each loop covering each active instrument and control device except simple hand switches and lights. Loop confirmation sheets shall form the basis for operational tests and documentation. Each loop validation sheet shall require (as a minimum) input of the following information and shall provide spaces for sign-off on individual items and on the complete loop by the Contractor:
   1. Project name.
   2. Loop number.
   3. Tag number, description, manufacturer and model number for each element.
   4. Installation bulletin number.
   5. Specification sheet number.
   6. Loop description number.
   7. Adjustment check.
   8. Verification of proper surge arrestor installation, intrinsically safe barrier installation and grounding as applicable.
   9. Space for comments.
   10. Space for loop sign-off by Contractor and date.
   11. Space for Engineer witness signature and date.

G. Loop Certifications: When installation tests have been successfully completed for all individual instruments and all separate analog control networks, a certified copy of all test forms signed by the Contractor as a witness, with test data entered, shall be submitted to the Engineer together with a clear and unequivocal statement that all instrumentation has been successfully calibrated, inspected, and tested.

3.06 PRE-COMMISSIONING

A. General: Pre-commissioning shall commence after acceptance of all wire tests, calibration tests and loop tests, and all inspections have demonstrated that the instrumentation and control system complies with all Contract requirements. Pre-commissioning shall demonstrate proper operation of all systems with process

equipment operating over full operating ranges under conditions as closely resembling actual operating conditions as possible.

B. Pre-commissioning Procedures and Documentation: Pre-commissioning and test activities shall follow detailed test procedures and check lists accepted by the Engineer. Test data shall be acquired using equipment as required and shall be recorded on test forms accepted by the Engineer, which include calculated tolerance limits for each step. Completion of system pre-commissioning and test activities shall be documented by a certified report, including all test forms with test data entered, delivered to the Engineer with a clear and unequivocal statement that all system pre-commissioning and test requirements have been satisfied.

C. Operational Validation: Where feasible, system pre-commissioning activities shall include the use of water to establish service conditions that simulate, to the greatest extent possible, normal final control element operating conditions in terms of applied process loads, operating ranges, and environmental conditions. Final control elements, control panels, and ancillary equipment shall be tested under start-up and steady-state operating conditions to verify that proper and stable control is achieved using motor control center and local field mounted control circuits. Hardwired and software control circuit interlocks and alarms shall be operational. The control of final control elements and ancillary equipment shall be tested using both manual and automatic (where provided) control circuits. The stable steady-state operation of final control elements running under the control of field mounted automatic analog controllers or software based controllers shall be assured by adjusting the controllers as required to eliminate oscillatory final control element operation. The transient stability of final control elements operating under the control of field mounted, and software based automatic analog controllers shall be verified by applying control signal disturbances, monitoring the amplitude and decay rate of control parameter oscillations (if any) and making necessary controller adjustments as required to eliminate excessive oscillatory amplitudes and decay rates.

D. Loop Tuning: Electronic control stations incorporating proportional, integral or differential control circuits shall be optimally tuned, experimentally, by applying control signal disturbances and adjusting the gain, reset, or rate settings as required to achieve a proper response. Measured final control element variable position/speed setpoint settings shall be compared to measured final control element position/speed values at 0, 25, 50, 75 and 100% of span and the results checked against indicated accuracy tolerances.

E. Pre-commissioning Validation Sheets: Pre-commissioning shall be documented on one of two types of test forms as follows:
   1. For functions which can be demonstrated on a loop-by-loop basis, the form shall include:
      a. Project name.
      b. Loop number.
      c. Loop description.
      d. Tag number, description, manufacturer, and data sheet number for each component.
      e. Space for sign-off and date by both the Contractor and Engineer.

2. For functions that cannot be demonstrated on a loop-by-loop basis, the test form shall be a listing of the specific tests to be conducted. With each test description the following information shall be included:
   a. Specification page and paragraph of function demonstrated.
   b. Description of function.
   c. Space for sign-off and date by both the Contractor and Engineer.

F. Pre-commissioning Certification: The Contractor shall submit an instrumentation and control system pre-commissioning completion report which shall state that all Contract requirements have been met and shall include a listing of all instrumentation and control system maintenance and repair activities conducted during the pre-commissioning testing. The report shall include as a minimum:
   1. Cover sheet for Engineer sign-off/date and space for listing of exceptions.
   2. Confirmation of delivery/acceptance of all submittals (hardware and software).
   3. Completed and signed loop check sheets.
   4. Completed and signed instrument calibration sheet.
   5. Completed and signed certificates of proper installation of instruments/equipment.
   6. Completed and signed wire continuity test sheets (if recorded separately).
   7. Completed and signed fiber optic cable attenuation test sheets.
   8. Completed and signed functional test sheets.
   9. Confirmation of rendered manufacturer services (as detailed in article 3.2).
   10. Signed confirmation of spare parts delivery.
   11. Confirmation of delivery of draft O&M.

G. Acceptance of the instrumentation and control system pre-commissioning testing must be provided in writing by the Engineer before the performance testing may begin. Exceptions to the above listing to allow performance testing to proceed must be issued by the ENGINER in writing and fully described on the pre-commissioning report cover sheet. Final acceptance of the control system shall be based upon plant completion as stated in the General Conditions.

3.07 ON-SITE SUPERVISION

A. The Contractor shall furnish the services of an on-site resident engineer to supervise and coordinate installation, adjustment, testing, and start-up of the PCIS. The resident engineer shall be present during the total period required to effect a complete operating system. Engineering personnel, with qualification as described in Article 1.1-H, shall be on site to supervise testing and support commissioning for a minimum of 400 hours, in addition to on site time required in other specifications, to check all equipment, perform the tests indicated in this Section, and furnish startup support services.

3.08 PERFORMANCE TEST

A. The entire PCIS shall operate for 14 days without hardware failure that requires a system reboot of the PLCs, halts operation of the plant or inhibits (i.e., prevents or significantly retards) control system communications. The plant shall be operated by operations personnel (i.e. licensed operators) during this period.

B. The Contractor shall furnish support staff as required to operate the system and to satisfy the repair or replacement requirements.

C. If any software or hardware component fails during the performance test, (with the exception of failures originating in The City of San Diego furnished or existing equipment) it shall be repaired or replaced and the PCIS shall be restarted for another 14 day period. Refer to Specification Section 40 95 10 – PLC-Based Control System Hardware, Paragraph 3.3G for performance test specifics.

3.09 TRAINING

A. General**:** The Contractor shall train The City of San Diego's personnel on the maintenance, calibration and repair of all equipment provided under this Contract.

B. Instructions: The training shall be performed by qualified representatives of the equipment manufacturers and shall be specific to each piece of equipment or package system. Training classes shall be as described in Specification Section 40 95 10 – PLC-BASED CONTROL SYSTEM HARDWARE, Paragraph 3.4 and shall cover, as a minimum, operational theory, maintenance, troubleshooting/repair, and calibration of supplied instruments.

C. Schedule: Training shall be performed during the pre-commissioning phase of the project. The training sessions shall be scheduled a minimum of 3 weeks in advance of when the courses are to be initiated. The Engineer will review the course outline for suitability and provide comments that shall be incorporated.

D. Agenda: The training shall include operation and maintenance procedures, troubleshooting with necessary test equipment, and changing set points, and calibration for that specific piece of equipment.

E. Documentation: The Contractor shall confirm completion of each training session. Within 10 working days after the completion of each training session, the Contractor shall submit the following to the Engineer and The City of San Diego:
   1. A list of all personnel that attended the session
   2. A copy of the training materials utilized during the lesson with all notes, diagrams, and comments.

F. Reference Section 40 95 10 – PLC-BASED CONTROL SYSTEM HARDWARE, Paragraph 3.4 for training specifics.

3.10 FINAL ACCEPTANCE

A. For the purpose of this Section, the following conditions shall be fulfilled before the Work is considered complete for Final Acceptance:
   1. Submittals have been completed and approved by the Engineer.
   2. The PCIS hardware (inclusive of all Vendor packages) has been calibrated, loop tested and pre-commissioned with all check sheets and certifications dated and signed as required.
   3. The City of San Diego personnel training has been performed.

4. The performance test has been successfully completed.
5. All required spare parts and expendable supplies and test equipment have been delivered to The City of San Diego.
6. Punch-list items have been addressed to the Engineer's satisfaction.
7. Final Contractor developed record drawings in both hard copy and electronic format have been submitted.
8. Revisions to the Owner's Manuals that may have resulted from the field tests have been reviewed and approved by the Engineer and submitted as final.
9. Debris associated with the installation and/or modification of field instrumentation, control panels and other field equipment has been removed.
10. Probes, elements, sample lines, transmitters, tubing, and enclosures (for new and newly wired existing instruments and equipment) have been cleaned and are in like-new condition.
11. Final PLC ladder logic and HMI screens are backed-up as required.
12. Server software and remote client access all functioning per the manufacturer's specification and project requirements.
13. SCADA I/O server linked to the Historian with data populated per contract requirements and report generation functioning as per the contract Report Meeting requirements.
14. Security functions associated with the Windows Domain Controllers (, network routers, switches and firewall appliance RAS have been properly configured and are active. All unused Ethernet switch ports have been secured.
15. All Network hardware is configured and working, and the performance of the control system communication system meets or exceeds the requirements of the contract documents and the manufacturer's specifications.
16. Control room and server room consoles are properly aligned and leveled in accordance with the manufacturer installation requirements. Consoles cleaned (with scuff marks removed) to like-new condition. Non-functioning light sources replaced, and internal wiring routed and secured within the console wireways.

END OF SECTION

Instrument Tag	Drawing Number	Instrument Type	Service Description	IO Type	Location	Area Classification	Signal Detail	Req. Power Supply	LSA Req	Sunshield Req	Calibrated Range	Instrument Setpoint	Installation Detail Ref.	Comments	Revision
P-00-AE-1003	I-100	Total Chlorine System Analyzer Element	SAN Vicente Conventional RO Transfer Pump Discharge TCL Analyzer Element	AI	SAN Vicente RO Feed Analyzer Panel	Unclassified	NA		NA	NA			I-501		
P-00-AE-1004	I-100	Ammonia Analyzer Element	SAN Vicente Conventional RO Transfer Pump Discharge NH3 Analyzer Element	AI	SAN Vicente RO Feed Analyzer Panel	Unclassified	NA		NA	NA			I-501		
P-00-AIT-1003	I-100	Total Chlorine System Analyzer Indicating Transmitter	SAN Vicente Conventional RO Transfer Pump Discharge TCL Analyzer Indicating Transmitter	AI	SAN Vicente RO Feed Analyzer Panel	Unclassified	24VDC		Yes	Yes			I-501		
P-00-AIT-1004	I-100	Ammonia Analyzer Indicating Transmitter	SAN Vicente Conventional RO Transfer Pump Discharge NH3 Analyzer Indicating Transmitter	AI	SAN Vicente RO Feed Analyzer Panel	Unclassified	24VDC		Yes	Yes			I-501		
P-00-FI-1003	I-100	Flow Indicator	SAN Vicente RO Feed Analyzer Panel Flow Indicator No 1	NA	SAN Vicente RO Feed Analyzer Panel	Unclassified	NA		NA	NA	TBD	NA	I-106		
P-00-FI-1004	I-100	Flow Indicator	SAN Vicente RO Feed Analyzer Panel Flow Indicator No 2	NA	SAN Vicente RO Feed Analyzer Panel	Unclassified	NA		NA	NA	TBD	NA	I-106		
P-00-FSL-1000	I-100	Flow Switch Low	SAN Vicente Conventional RO Transfer Pump Discharge Flow Switch Low	DI	SAN Vicente Conventional RO Transfer Pump Discharge Header	Unclassified	24VDC		NA	NA	NA	TBD	I-152		
P-00-FSL-1003	I-100	Flow Switch Low	SAN Vicente RO Feed Analyzer Panel Flow Switch Low	DI	SAN Vicente RO Feed Analyzer Panel	Unclassified	24VDC	24VDC	NA	NA	NA	TBD	I-152		
P-00-PI-1000	I-100	Pressure Gauge	SAN Vicente Conventional RO Transfer Pump Discharge Pressure Gauge	NA	SAN Vicente Conventional RO Transfer Pump Discharge Header	Unclassified	NA		NA	NA	TBD	NA	I-301		
P-00-PI-1003	I-100	Pressure Gauge	SAN Vicente RO Feed Analyzer Panel Pressure Gauge	NA	SAN Vicente RO Feed Analyzer Panel	Unclassified	NA		NA	NA	TBD	NA	I-301		
P-00-TSH-1000	I-100	Temperature Switch High	SAN Vicente Conventional RO Transfer Pump Motor Temperature Switch High	DI	SAN Vicente Conventional RO Transfer Pump Motor	Unclassified	120VAC		NA	NA	NA	NA	I-401		
P-00-AE-1022	I-101	Oxidation-Reduction Potential Analyzer Element	BY Rome ORP Analyzer Element	AI	3-Stage Conventional Reverse Osmosis System	Unclassified	NA		NA	NA	-1000 to 1000 mV	NA	I-501		
P-00-AE-1023	I-101	PH Analyzer Element	SAN Vicente RO System Cartridge Discharge PH Analyzer Element	AI	3-Stage Conventional Reverse Osmosis System	Unclassified	NA		NA	NA			I-501		
P-00-AE-1024	I-101	Conductivity Analyzer Element	SAN Vicente RO System Cartridge Discharge COND Analyzer Element	AI	3-Stage Conventional Reverse Osmosis System	Unclassified	NA		NA	NA			I-501		
P-00-AIT-1022	I-101	Oxidation-Reduction Potential Analyzer Indicating Transmitter	BY Rome ORP Analyzer Indicating Transmitte	AI	3-Stage Conventional Reverse Osmosis System	Unclassified	24VDC	24VDC	Yes	Yes	TBD	NA	I-501		
P-00-AIT-1023	I-101	PH Analyzer Indicating Transmitter	SAN Vicente RO System Cartridge Filter Discharge ORP Analyzer Indicating Transmitte	AI	3-Stage Conventional Reverse Osmosis System	Unclassified	24VDC	24VDC	Yes	Yes			I-501		
P-00-AIT-1024	I-101	Conductivity Analyzer Indicating Transmitter	SAN Vicente RO System Cartridge Filter Discharge PH Analyzer Indicating Transmitter	AI	3-Stage Conventional Reverse Osmosis System	Unclassified	24VDC	24VDC	Yes	Yes			I-501		
P-00-FE-1022	I-101	Electromagnetic Flow Meter	SAN Vicente RO System Cartridge Filter Inlet Line Flow Element	NA	3-Stage Conventional Reverse Osmosis System	Unclassified	NA		NA	NA		NA	I-101		
P-00-FIT-1022	I-101	Electromagnetic Flow Indicating Transmitter	SAN Vicente RO System Cartridge Filter Inlet Line Flow Indicating Transmitter	AI	3-Stage Conventional Reverse Osmosis System	Unclassified	4-20mA HART	24VDC	NA	NA		NA	I-101		
P-00-PI-1023	I-101	Pressure Gauge	SAN Vicente RO System Cartridge Filter Pressure Gauge	NA	3-Stage Conventional Reverse Osmosis System	Unclassified	NA		NA	NA	TBD	NA	I-301		
P-00-PIT-1022	I-101	Pressure Indicating Transmitter	SAN Vicente RO System Cartridge Filter Inlet Line Pressure Indicating Transmitter	AI	3-Stage Conventional Reverse Osmosis System	Unclassified	NA		NA	NA	0 - 15 psig [VTC]	NA	I-303		
P-00-PIT-1023	I-101	Pressure Indicating Transmitter	SAN Vicente RO System Cartridge Filter Discharge Pressure Indicating Transmitter	AI	3-Stage Conventional Reverse Osmosis System	Unclassified	NA		NA	NA	0 - 15 psig [VTC]	NA	I-303		
P-00-TE-1023	I-101	Temperature Element	SAN Vicente RO System Cartridge Filter Discharge Temperature Element	NA	3-Stage Conventional Reverse Osmosis System	Unclassified	NA		NA	NA		NA	I-401		
P-00-TIT-1023	I-101	Temperature Indicating Transmitter	SAN Vicente RO System Cartridge Filter Discharge Temperature Indicator	NA	3-Stage Conventional Reverse Osmosis System	Unclassified	NA		NA	NA			I-401		
P-00-AE-1035	I-102	Conductivity Analyzer Element	BY Rome COND Analyzer Element	AI	3-Stage Conventional Reverse Osmosis System	Unclassified	NA		NA	NA			I-501		
P-00-AIT-1035	I-102	Conductivity Analyzer Indicating Transmitter	BY Rome COND Analyzer Indicating Transmitter	AI	3-Stage Conventional Reverse Osmosis System	Unclassified	24VDC	24VDC	Yes	Yes			I-501		
P-00-PI-1030A	I-102	Pressure Gauge	SAN Vicente RO System First Stage Feed Pump Inlet Line Pressure Gauge	NA	3-Stage Conventional Reverse Osmosis System	Unclassified	NA		NA	NA	TBD	NA	I-301		
P-00-PI-1030B	I-102	Pressure Gauge	SAN Vicente RO System First Stage Feed Pump Discharge Pressure Gauge	NA	3-Stage Conventional Reverse Osmosis System	Unclassified	NA		NA	NA	TBD	NA	I-301		
P-00-PI-1035	I-102	Pressure Gauge	SAN Vicente RO System First Stage Membranes Discharge Pressure Gauge	NA	3-Stage Conventional Reverse Osmosis System	Unclassified	NA		NA	NA	TBD	NA	I-301		
P-00-PIT-1031	I-102	Pressure Indicating Transmitter	SAN Vicente RO System First Stage Feed Pump Discharge Pressure Indicating Transmitter	AI	3-Stage Conventional Reverse Osmosis System	Unclassified	NA		NA	NA	0 - 15 psig [VTC]	NA	I-303		
P-00-PSH-1030	I-102	Pressure Switch High	SAN Vicente RO System First Stage Feed Pump Pressure Switch High	DI	3-Stage Conventional Reverse Osmosis System	Unclassified	120VAC		NA	NA	NA	TBD	I-301		
P-00-PSL-1030	I-102	Pressure Switch Low	SAN Vicente RO System First Stage Feed Pump Pressure Switch Low	DI	3-Stage Conventional Reverse Osmosis System	Unclassified	120VAC		NA	NA					
P-00-TSH-1030	I-102	Temperature Switch High	SAN Vicente RO System First Stage Feed Pump Motor Temperature Switch High	DI	3-Stage Conventional Reverse Osmosis System	Unclassified	120VAC		NA	NA	NA	NA	I-401		
P-00-AE-1045	I-103	Conductivity Analyzer Element	BY Rome COND Analyzer Element	AI	3-Stage Conventional Reverse Osmosis System	Unclassified	NA		NA	NA			I-501		
P-00-AIT-1045	I-103	Conductivity Analyzer Indicating Transmitter	BY Rome COND Analyzer Indicating Transmitter	AI	3-Stage Conventional Reverse Osmosis System	Unclassified	24VDC	24VDC	Yes	Yes			I-501		
P-00-FE-1041	I-103	Electromagnetic Flow Meter	SAN Vicente RO System Second Stage Feed Pump Discharge Flow Element	NA	3-Stage Conventional Reverse Osmosis System	Unclassified	NA		NA	NA		NA	I-101		
P-00-FE-1047	I-103	Electromagnetic Flow Meter	SAN Vicente RO System Second Stage Membranes Discharge Flow Element	NA	3-Stage Conventional Reverse Osmosis System	Unclassified	NA		NA	NA		NA	I-101		
P-00-FIT-1041	I-103	Electromagnetic Flow Indicating Transmitter	SAN Vicente RO System Second Stage Feed Pump Discharge Indicating Transmitter	AI	3-Stage Conventional Reverse Osmosis System	Unclassified	4-20mA HART	24VDC	NA	NA		NA	I-101		
P-00-FIT-1047	I-103	Electromagnetic Flow Indicating Transmitter	SAN Vicente RO System Second Stage Membranes Discharge Indicating Transmitter	AI	3-Stage Conventional Reverse Osmosis System	Unclassified	4-20mA HART	24VDC	NA	NA		NA	I-101		
P-00-PIT-1040	I-103	Pressure Indicating Transmitter	SAN Vicente RO System Second Stage Feed Pump Inlet Line Pressure Indicating Transmitter	AI	3-Stage Conventional Reverse Osmosis System	Unclassified	NA		NA	NA	0 - 15 psig [VTC]	NA	I-303		
P-00-PIT-1041	I-103	Pressure Indicating Transmitter	SAN Vicente RO System Second Stage Feed Pump Discharge Pressure Indicating Transmitter	AI	3-Stage Conventional Reverse Osmosis System	Unclassified	NA		NA	NA	0 - 15 psig [VTC]	NA	I-303		
P-00-PIT-1046	I-103	Pressure Indicating Transmitter	SAN Vicente RO System Second Stage Membranes Discharge Pressure Indicating Transmitter	AI	3-Stage Conventional Reverse Osmosis System	Unclassified	NA		NA	NA	0 - 15 psig [VTC]	NA	I-303		
P-00-TSH-1040	I-103	Temperature Switch High	SAN Vicente RO System Second Stage Feed Pump Motor Temperature Switch High	DI	3-Stage Conventional Reverse Osmosis System	Unclassified	120VAC		NA	NA	NA	NA	I-401		
P-00-AE-1051	I-104	PH Analyzer Element	SAN Vicente RO System Third Stage Feed Pump Inlet Line PH Analyzer Element	AI	3-Stage Conventional Reverse Osmosis System	Unclassified	NA		NA	NA			I-501		
P-00-AE-1052	I-104	Conductivity Analyzer Element	SAN Vicente RO System Third Stage Feed Pump Inlet Line COND Analyzer Element	AI	3-Stage Conventional Reverse Osmosis System	Unclassified	NA		NA	NA			I-501		
P-00-AE-1056	I-104	Conductivity Analyzer Element	SAN Vicente RO System Third Stage Membranes Discharge COND Analyzer Element No 1	AI	3-Stage Conventional Reverse Osmosis System	Unclassified	NA		NA	NA			I-501		
P-00-AE-1058	I-104	Conductivity Analyzer Element	SAN Vicente RO System Third Stage Membranes Discharge COND Analyzer Element No 2	AI	3-Stage Conventional Reverse Osmosis System	Unclassified	NA		NA	NA			I-501		
P-00-AIT-1051	I-104	PH Analyzer Indicating Transmitter	SAN Vicente RO System Third Stage Feed Pump Inlet Line PH Analyzer Indicating Transmitter	AI	3-Stage Conventional Reverse Osmosis System	Unclassified	24VDC	24VDC	Yes	Yes			I-501		
P-00-AIT-1052	I-104	Conductivity Analyzer Indicating Transmitter	SAN Vicente RO System Third Stage Feed Pump Inlet Line COND Analyzer Indicating Transmitter	AI	3-Stage Conventional Reverse Osmosis System	Unclassified	24VDC	24VDC	Yes	Yes			I-501		
P-00-AIT-1056	I-104	Conductivity Analyzer Indicating Transmitter	SAN Vicente RO System Third Stage Membranes Discharge COND Analyzer Indicating Transmitter No 1	AI	3-Stage Conventional Reverse Osmosis System	Unclassified	24VDC	24VDC	Yes	Yes			I-501		
P-00-AIT-1058	I-104	Conductivity Analyzer Indicating Transmitter	SAN Vicente RO System Third Stage Membranes Discharge COND Analyzer Indicating Transmitter No 2	AI	3-Stage Conventional Reverse Osmosis System	Unclassified	24VDC		Yes	Yes			I-501		
P-00-FE-1056	I-104	Electromagnetic Flow Meter	SAN Vicente RO System Third Stage Membranes Discharge Flow Element No 1	NA	3-Stage Conventional Reverse Osmosis System	Unclassified	NA		NA	NA		NA	I-101		
P-00-FE-1058	I-104	Electromagnetic Flow Meter	SAN Vicente RO System Third Stage Membranes Discharge Flow Element No 2	NA	3-Stage Conventional Reverse Osmosis System	Unclassified	NA		NA	NA		NA	I-101		
P-00-FIT-1056	I-104	Electromagnetic Flow Indicating Transmitter	SAN Vicente RO System Third Stage Membranes Discharge Flow Indicating Transmitter No 1	AI	3-Stage Conventional Reverse Osmosis System	Unclassified	4-20mA HART	24VDC	NA	NA		NA	I-101		
P-00-FIT-1058	I-104	Electromagnetic Flow Indicating Transmitter	SAN Vicente RO System Third Stage Membranes Discharge Flow Indicating Transmitter No 2	AI	3-Stage Conventional Reverse Osmosis System	Unclassified	4-20mA HART	24VDC	NA	NA		NA	I-101		
P-00-PIT-1055	I-104	Pressure Indicating Transmitter	SAN Vicente RO System Third Stage Feed Pump Inlet Line Pressure Indicating Transmitter	AI	3-Stage Conventional Reverse Osmosis System	Unclassified	NA		NA	NA	0 - 15 psig [VTC]	NA	I-303		
P-00-PIT-1056	I-104	Pressure Indicating Transmitter	SAN Vicente RO System Third Stage Feed Pump Discharge Pressure Indicating Transmitter	AI	3-Stage Conventional Reverse Osmosis System	Unclassified	NA		NA	NA	0 - 15 psig [VTC]	NA	I-303		
P-00-PIT-1057	I-104	Pressure Indicating Transmitter	SAN Vicente RO System Third Stage Membranes Discharge Pressure Indicating Transmitter	AI	3-Stage Conventional Reverse Osmosis System	Unclassified	NA		NA	NA	0 - 15 psig [VTC]	NA	I-303		
P-00-PSL-1055	I-104	Pressure Switch Low	SAN Vicente RO System Third Stage Feed Pump Pressure Switch Low	DI	3-Stage Conventional Reverse Osmosis System	Unclassified	120VAC		NA	NA					
P-00-TSH-1055	I-104	Temperature Switch High	SAN Vicente RO System Third Stage Feed Pump Motor Temperature Switch High	DI	3-Stage Conventional Reverse Osmosis System	Unclassified	120VAC		NA	NA	NA	NA	I-401		
P-00-AE-1059	I-105	Conductivity Analyzer Element	SAN Vicente RO Combined Permeate System COND Analyzer Element	AI	3-Stage Conventional Reverse Osmosis System	Unclassified	NA		NA	NA			I-501		
P-00-AIT-1059	I-105	Conductivity Analyzer Indicating Transmitter	SAN Vicente RO Combined Permeate System COND Analyzer Indicating Transmitter	NA	3-Stage Conventional Reverse Osmosis System	Unclassified	24VDC	24VDC	Yes	Yes			I-501		
P-00-FE-1059	I-105	Electromagnetic Flow Meter	SAN Vicente RO Combined Permeate System Stage 1 Electromagnetic Flow Meter	NA	3-Stage Conventional Reverse Osmosis System	Unclassified	NA		NA	NA		NA	I-101		
P-00-FIT-1059	I-105	Electromagnetic Flow Indicating Transmitter	SAN Vicente RO Combined Permeate System Stage 1 Electromagnetic Flow Indicating Transmitter	AI	3-Stage Conventional Reverse Osmosis System	Unclassified	4-20mA HART	24VDC	NA	NA		NA	I-101		
P-00-PIT-1059	I-105	Pressure Indicating Transmitter	SAN Vicente RO Combined Permeate System Stage 1 Pressure Indicating Transmitter	AI	3-Stage Conventional Reverse Osmosis System	Unclassified	NA		NA	NA	0 - 15 psig [VTC]	NA	I-303		
P-00-FE-1066	I-106	Electromagnetic Flow Meter	RO CIP Pump Discharge Flow Element	NA	RO CIP Pump Discharge Header	Unclassified	NA		NA	NA		NA	I-101		
P-00-FIT-1066	I-106	Electromagnetic Flow Indicating Transmitter	RO CIP Pump Discharge Flow Indicating Transmitter	AI	RO CIP Pump Discharge Header	Unclassified	4-20mA HART	24VDC	NA	NA		NA	I-101		
P-00-JI-1060	I-106	Power Indicater	RO CIP Tank Power Indicater	DI	RO CIP Tank	Unclassified	NA		NA	NA					

Instrument Tag	Drawing Number	Instrument Type	Service Description	IO Type	Location	Area Classification	Signal Detail	Req. Power Supply	LSA Req	Sunshield Req	Calibrated Range	Instrument Setpoint	Installation Detail Ref.	Comments	Revision
P-00-LIT-1060	I-106	Level Indicating Transmitter	RO CIP Tank Level Indicating Transmitter	AI	RO CIP Tank	Unclassified	4-20mA HART		NA	NA			I-202		
P-00-PI-1066	I-106	Pressure Gauge	RO CIP Pump Discharge Pressure Gauge	NA	RO CIP Pump Discharge Header	Unclassified	NA		NA	NA	TBD	NA	I-301		
P-00-PI-1070A	I-106	Pressure Gauge	RO CIP 5-Micron Cartridge Filter Pressure Gauge	NA	RO CIP 5-Micron Cartridge Filter	Unclassified	NA		NA	NA	TBD	NA	I-301		
P-00-PI-1070B	I-106	Pressure Gauge	RO CIP 5-Micron Cartridge Filter Discharge Pressure Gauge	NA	RO CIP 5-Micron Cartridge Filter Discharge Header	Unclassified	NA		NA	NA	TBD	NA	I-301		
P-00-PSH-1065	I-106	Pressure Switch High	RO CIP Pump Discharge Pressure Switch High	DI	RO CIP Pump Discharge Header	Unclassified	120VAC		NA	NA	NA	TBD	I-301		
P-00-TIC-1060	I-106	Temperature Indicator Controller	RO CIP Tank Temperature Indicator Controller	AI	RO CIP Tank	Unclassified	NA		NA	NA					
P-00-TSH-1065	I-106	Temperature Switch High	RO CIP Pump Motor Temperature Switch High	DI	RO CIP Pump Motor	Unclassified	120VAC		NA	NA	NA	NA	I-401		
P-00-LIT-1075	I-107	Level Indicating Transmitter	RO Flush Tank Level Indicating Transmitter	AI	RO Flush Tank	Unclassified	4-20mA HART		NA	NA			I-202		
P-00-PI-1080	I-107	Pressure Gauge	CIP Fill Pump Discharge Pressure Gauge	NA	CIP Fill Pump Discharge Header	Unclassified	NA		NA	NA	TBD	NA	I-301		
P-00-PI-1085	I-107	Pressure Gauge	RO Flush Pump Discharge Pressure Gauge	NA	RO Flush Pump Discharge Header	Unclassified	NA		NA	NA	TBD	NA	I-301		
P-00-PSH-1080	I-107	Pressure Switch High	CIP Fill Pump Discharge Pressure Switch High	DI	CIP Fill Pump Discharge Header	Unclassified	120VAC		NA	NA	NA	TBD	I-301		
P-00-PSH-1085	I-107	Pressure Switch High	RO Flush Pump Discharge Pressure Switch High	DI	RO Flush Pump Discharge Header	Unclassified	120VAC		NA	NA	NA	TBD	I-301		
P-00-TSH-1080	I-107	Temperature Switch High	CIP Fill Pump Motor Temperature Switch High	DI	CIP Fill Pump Motor	Unclassified	120VAC		NA	NA	NA	TBD	I-401		
P-00-TSH-1085	I-107	Temperature Switch High	RO Flush Pump Motor Temperature Switch High	DI	RO Flush Pump Motor	Unclassified	120VAC		NA	NA	NA	TBD	I-401		
P-00-AE-1075	I-108	NO3/NO2 (Nitrogen Dioxide) Analyzer Element	SAN Vicente Combined Permeate Nitrate Analyzer Panel NO3/NO2 Analyzer Element	AI	SAN Vicente Combined Permeate Nitrate Analyzer Panel	Unclassified	NA		NA	NA			I-501		
P-00-AE-1076	I-108	NO3/NO2 (Nitrogen Dioxide) Analyzer Element	Murray Combined Permeate Nitrate Analyzer Panel NO3/NO2 Analyzer Element	AI	Murray Combined Permeate Nitrate Analyzer Panel	Unclassified	NA		NA	NA			I-501		
P-00-AE-1110	I-108	Volatile Organic Compound Analyzer Element	UV System VOC Analyzer Panel VOC Analyzer Element No 7	AI	UV System VOC Analyzer Panel	Unclassified	NA		NA	NA			I-501		
P-00-AE-986	I-108	Total Organic Carbon Analyzer Element	TO CCRO Permeate Analyzer Panel TOC Analyzer Element	AI	TO CCRO Permeate Analyzer Panel	Unclassified	NA		NA	NA			I-501		
P-00-AE-987	I-108	Conductivity Analyzer Element	TO CCRO Permeate Analyzer Panel COND Analyzer Element	AI	TO CCRO Permeate Analyzer Panel	Unclassified	NA		NA	NA			I-501		
P-00-AIT-1075	I-108	NO3/NO2 (Nitrogen Dioxide) Analyzer Indicating Transmitter	SAN Vicente Combined Permeate Nitrate Analyzer Panel NO3/NO2 Analyzer Indicating Transmitter	AI	SAN Vicente Combined Permeate Nitrate Analyzer Panel	Unclassified	24VDC	24VDC	Yes	Yes	0 - 20 mg/L	NA	I-501		
P-00-AIT-1076	I-108	NO3/NO2 (Nitrogen Dioxide) Analyzer Indicating Transmitter	Murray Combined Permeate Nitrate Analyzer Panel NO3/NO2 Analyzer Indicating Transmitter	AI	Murray Combined Permeate Nitrate Analyzer Panel	Unclassified	24VDC	24VDC	Yes	Yes	0 - 20 mg/L	NA	I-501		
P-00-AIT-1110	I-108	Volatile Organic Compound Analyzer Indicating Transmitter	UV System VOC Analyzer Panel VOC Analyzer Indicating Transmitter No 7	AI	UV System VOC Analyzer Panel	Unclassified	24VDC	120VAC	Yes	Yes			I-501		
P-00-AIT-986	I-108	Total Organic Carbon Analyzer Indicating Transmitter	TO CCRO Permeate Analyzer Panel TOC Analyzer Indicating Transmitter	AI	TO CCRO Permeate Analyzer Panel	Unclassified	24VDC	24VDC	Yes	Yes			I-501		
P-00-AIT-987	I-108	Conductivity Analyzer Indicating Transmitter	TO CCRO Permeate Analyzer Panel COND Analyzer Indicating Transmitter	AI	TO CCRO Permeate Analyzer Panel	Unclassified	24VDC		Yes	Yes			I-501		
P-00-FI-1075	I-108	Flow Indicator	SAN Vicente Combined Permeate Nitrate Analyzer Panel Flow Indicator	NA	SAN Vicente Combined Permeate Nitrate Analyzer Panel	Unclassified	NA		NA	NA	TBD	NA	I-106		
P-00-FI-1076	I-108	Flow Indicator	Murray Combined Permeate Nitrate Analyzer Panel Flow Indicator	NA	Murray Combined Permeate Nitrate Analyzer Panel	Unclassified	NA		NA	NA	TBD	NA	I-106		
P-00-FI-1110	I-108	Flow Indicator	UV System VOC Analyzer Panel Flow Indicator	NA	UV System VOC Analyzer Panel	Unclassified	NA		NA	NA	TBD	NA	I-106		
P-00-FI-986	I-108	Flow Indicator	TO CCRO Permeate Analyzer Panel Flow Indicator	NA	TO CCRO Permeate Analyzer Panel	Unclassified	NA		NA	NA	TBD	NA	I-106		
P-00-FI-987A	I-108	Flow Indicator	TO CCRO Permeate Analyzer Panel Flow Indicator No 1	NA	TO CCRO Permeate Analyzer Panel	Unclassified	NA		NA	NA	TBD	NA	I-106		
P-00-FI-987B	I-108	Flow Indicator	TO CCRO Permeate Analyzer Panel Flow Indicator No 2	NA	TO CCRO Permeate Analyzer Panel	Unclassified	NA		NA	NA	TBD	NA	I-106		
P-00-FSL-1075	I-108	Flow Switch Low	SAN Vicente Combined Permeate Nitrate Analyzer Panel Flow Switch Low	DI	SAN Vicente Combined Permeate Nitrate Analyzer Panel	Unclassified	24VDC	24VDC	NA	NA	NA	TBD	I-152		
P-00-FSL-1076	I-108	Flow Switch Low	Murray Combined Permeate Nitrate Analyzer Panel Flow Switch Low	DI	Murray Combined Permeate Nitrate Analyzer Panel	Unclassified	24VDC	24VDC	NA	NA	NA	TBD	I-152		
P-00-FSL-1110	I-108	Flow Switch Low	UV System VOC Analyzer Panel Flow Switch Low	DI	UV System VOC Analyzer Panel	Unclassified	24VDC	24VDC	NA	NA	NA	TBD	I-152		
P-00-FSL-986	I-108	Flow Switch Low	TO CCRO Permeate Analyzer Panel Flow Switch Low	DI	TO CCRO Permeate Analyzer Panel	Unclassified	24VDC	24VDC	NA	NA	NA	TBD	I-152		
P-00-PI-1075	I-108	Pressure Gauge	SAN Vicente Combined Permeate Nitrate Analyzer Panel Pressure Gauge	NA	SAN Vicente Combined Permeate Nitrate Analyzer Panel	Unclassified	NA		NA	NA	TBD	NA	I-301		
P-00-PI-1076	I-108	Pressure Gauge	Murray Combined Permeate Nitrate Analyzer Panel Pressure Gauge	NA	Murray Combined Permeate Nitrate Analyzer Panel	Unclassified	NA		NA	NA	TBD	NA	I-301		
P-00-PI-1110	I-108	Pressure Gauge	UV System VOC Analyzer Panel Pressure Gauge	NA	UV System VOC Analyzer Panel	Unclassified	NA		NA	NA	TBD	NA	I-301		
P-00-PI-986	I-108	Pressure Gauge	TO CCRO Permeate Analyzer Panel Pressure Gauge	NA	TO CCRO Permeate Analyzer Panel	Unclassified	NA		NA	NA	TBD	NA	I-301		
P-00-AE-1100	I-111	UV Indicator Analyzer Element	UV-AOP Reactor No 1 UVI Analyzer Element No 1	AI	UV-AOP Reactor No 1 Skid	Unclassified	NA		NA	NA			I-501		
P-00-AE-1102	I-111	Total Chlorine System Analyzer Element	UV-AOP Reactor No 1 TCL Analyzer Element No 7	AI	UV-AOP Reactor No 1 Skid	Unclassified	NA		NA	NA			I-501		
P-00-AE-1105	I-111	UV Transmittance Analyzer Element	UV-AOP Reactor No 1 UVT Analyzer Element No 2	AI	UV-AOP Reactor No 1 Skid	Unclassified	NA		NA	NA			I-501		
P-00-AE-1106	I-111	Free Chlorine System Analyzer Element	UV-AOP Reactor No 1 FCL Analyzer Element No 3	AI	UV-AOP Reactor No 1 Skid	Unclassified	NA		NA	NA			I-501		
P-00-AE-1107	I-111	Total Chlorine System Analyzer Element	UV-AOP Reactor No 1 TCL Analyzer Element No 4	AI	UV-AOP Reactor No 1 Skid	Unclassified	NA		NA	NA			I-501		
P-00-AE-1108	I-111	Total Chlorine System Analyzer Element	UV-AOP Reactor No 1 TCL Analyzer Element No 5	AI	UV-AOP Reactor No 1 Skid	Unclassified	NA		NA	NA			I-501		
P-00-AE-1109	I-111	UV Transmittance Analyzer Element	UV-AOP Reactor No 1 UVT Analyzer Element No 6	AI	UV-AOP Reactor No 1 Skid	Unclassified	NA		NA	NA			I-501		
P-00-AIT-1100	I-111	UV Indicator Analyzer Indicating Transmitter	UV-AOP Reactor No 1 UVI Analyzer Indicating Transmitter No 1	AI	UV-AOP Reactor No 1 Skid	Unclassified	24VDC	24VDC	Yes	Yes			I-501		
P-00-AIT-1102	I-111	Total Chlorine System Analyzer Indicating Transmitter	UV-AOP Reactor No 1 TCL Analyzer Indicating Transmitter No 7	AI	UV-AOP Reactor No 1 Skid	Unclassified	24VDC	24VDC	Yes	Yes			I-501		
P-00-AIT-1105	I-111	UV Transmittance Analyzer Indicating Transmitter	UV-AOP Reactor No 1 UVT Analyzer Indicating Transmitter No 2	AI	UV-AOP Reactor No 1 Skid	Unclassified	24VDC	24VDC	Yes	Yes			I-501		
P-00-AIT-1106	I-111	Free Chlorine System Analyzer Indicating Transmitter	UV-AOP Reactor No 1 FCL Analyzer Indicating Transmitter No 3	AI	UV-AOP Reactor No 1 Skid	Unclassified	24VDC	24VDC	Yes	Yes			I-501		
P-00-AIT-1107	I-111	Total Chlorine System Analyzer Indicating Transmitter	UV-AOP Reactor No 1 TCL Analyzer Indicating Transmitter No 4	AI	UV-AOP Reactor No 1 Skid	Unclassified	24VDC	24VDC	Yes	Yes			I-501		
P-00-AIT-1108	I-111	Total Chlorine System Analyzer Indicating Transmitter	UV-AOP Reactor No 1 TCL Analyzer Indicating Transmitter No 5	AI	UV-AOP Reactor No 1 Skid	Unclassified	24VDC	24VDC	Yes	Yes			I-501		
P-00-AIT-1109	I-111	UV Transmittance Analyzer Indicating Transmitter	UV-AOP Reactor No 1 UVT Analyzer Indicating Transmitter No 6	AI	UV-AOP Reactor No 1 Skid	Unclassified	24VDC	24VDC	Yes	Yes			I-501		
P-00-FE-1101	I-111	Electromagnetic Flow Meter	UV-AOP Reactor No 1 Electromagnetic Flow Meter	NA	UV-AOP Reactor No 1 Skid	Unclassified	NA		NA	NA		NA	I-101		
P-00-FIT-1101	I-111	Electromagnetic Flow Indicating Transmitter	UV-AOP Reactor No 1 Electromagnetic Flow Indicating Transmitter	AI	UV-AOP Reactor No 1 Skid	Unclassified	4-20mA HART	24VDC	NA	NA		NA	I-101		
P-00-LSL-1100	I-111	Float Level Switch High	UV-AOP Reactor No 1 Level Switch High	DI	UV-AOP Reactor No 1 Skid	Unclassified			NA	NA	NA		I-151		
P-00-TE-1100	I-111	Temperature Element	UV-AOP Reactor No 1 Discharge Temperature Element	NA	UV-AOP Reactor No 1 Skid	Unclassified	NA		NA	NA		NA	I-401		
P-00-TIT-1100	I-111	Temperature Indicating Transmitter	UV-AOP Reactor No 1 Discharge Temperature Indicator	NA	UV-AOP Reactor No 1 Skid	Unclassified	NA	120VAC	NA	NA			I-401		
P-00-YS-1100	I-111	Fail Switch	UV-AOP Reactor No 1 Fail Switch	DI	UV-AOP Reactor No 1 Skid	Unclassified			NA	NA	NA				
P-00-AE-1120	I-112	UV Indicator Analyzer Element	UV-AOP Reactor No 2 UVI Analyzer Element No 1	AI	UV-AOP Reactor No 2 Skid	Unclassified	NA		NA	NA			I-501		
P-00-AE-1122	I-112	Total Chlorine System Analyzer Element	UV-AOP Reactor No 2 TCL Analyzer Element No 7	AI	UV-AOP Reactor No 2 Skid	Unclassified	NA		NA	NA			I-501		
P-00-AE-1125	I-112	UV Transmittance Analyzer Element	UV-AOP Reactor No 2 UVT Analyzer Element No 2	AI	UV-AOP Reactor No 2 Skid	Unclassified	NA		NA	NA			I-501		
P-00-AE-1126	I-112	Free Chlorine System Analyzer Element	UV-AOP Reactor No 2 FCL Analyzer Element No 3	AI	UV-AOP Reactor No 2 Skid	Unclassified	NA		NA	NA			I-501		
P-00-AE-1127	I-112	Total Chlorine System Analyzer Element	UV-AOP Reactor No 2 TCL Analyzer Element No 4	AI	UV-AOP Reactor No 2 Skid	Unclassified	NA		NA	NA			I-501		
P-00-AE-1128	I-112	Total Chlorine System Analyzer Element	UV-AOP Reactor No 2 TCL Analyzer Element No 5	AI	UV-AOP Reactor No 2 Skid	Unclassified	NA		NA	NA			I-501		
P-00-AE-1129	I-112	UV Transmittance Analyzer Element	UV-AOP Reactor No 2 UVT Analyzer Element No 6	AI	UV-AOP Reactor No 2 Skid	Unclassified	NA		NA	NA			I-501		
P-00-AIT-1120	I-112	UV Indicator Analyzer Indicating Transmitter	UV-AOP Reactor No 2 UVI Analyzer Indicating Transmitter No 1	AI	UV-AOP Reactor No 2 Skid	Unclassified	24VDC	24VDC	Yes	Yes			I-501		
P-00-AIT-1122	I-112	Total Chlorine System Analyzer Indicating Transmitter	UV-AOP Reactor No 2 TCL Analyzer Indicating Transmitter No 7	AI	UV-AOP Reactor No 2 Skid	Unclassified	24VDC	24VDC	Yes	Yes			I-501		
P-00-AIT-1125	I-112	UV Transmittance Analyzer Indicating Transmitter	UV-AOP Reactor No 2 UVT Analyzer Indicating Transmitter No 2	AI	UV-AOP Reactor No 2 Skid	Unclassified	24VDC	24VDC	Yes	Yes			I-501		

Instrument Tag	Drawing Number	Instrument Type	Service Description	IO Type	Location	Area Classification	Signal Detail	Req. Power Supply	LSA Req	Sunshield Req	Calibrated Range	Instrument Setpoint	Installation Detail Ref.	Comments	Revision
P-00-AIT-1126	I-112	Free Chlorine System Analyzer Indicating Transmitter	UV-AOP Reactor No 2 FCL Analyzer Indicating Transmitter No 3	AI	UV-AOP Reactor No 2 Skid	Unclassified	24VDC	24VDC	Yes	Yes			I-501		
P-00-AIT-1127	I-112	Total Chlorine System Analyzer Indicating Transmitter	UV-AOP Reactor No 2 TCL Analyzer Indicating Transmitter No 4	AI	UV-AOP Reactor No 2 Skid	Unclassified	24VDC	24VDC	Yes	Yes			I-501		
P-00-AIT-1128	I-112	Total Chlorine System Analyzer Indicating Transmitter	UV-AOP Reactor No 2 TCL Analyzer Indicating Transmitter No 5	AI	UV-AOP Reactor No 2 Skid	Unclassified	24VDC	24VDC	Yes	Yes			I-501		
P-00-AIT-1129	I-112	UV Transmittance Analyzer Indicating Transmitter	UV-AOP Reactor No 2 UVT Analyzer Indicating Transmitter No 6	AI	UV-AOP Reactor No 2 Skid	Unclassified	24VDC	24VDC	Yes	Yes			I-501		
P-00-FE-1121	I-112	Electromagnetic Flow Meter	UV-AOP Reactor No 2 Electromagnetic Flow Meter	NA	UV-AOP Reactor No 2 Skid	Unclassified	NA		NA	NA		NA	I-101		
P-00-FIT-1121	I-112	Electromagnetic Flow Indicating Transmitter	UV-AOP Reactor No 2 Electromagnetic Flow Indicating Transmitter	AI	UV-AOP Reactor No 2 Skid	Unclassified	4-20mA HART	24VDC	NA	NA		NA	I-101		
P-00-LSL-1120	I-112	Float Level Switch High	UV-AOP Reactor No 2 Level Switch High	DI	UV-AOP Reactor No 2 Skid	Unclassified			NA	NA	NA		I-151		
P-00-TE-1120	I-112	Temperature Element	UV-AOP Reactor No 2 Discharge Temperature Element	NA	UV-AOP Reactor No 2 Skid	Unclassified	NA		NA	NA		NA	I-401		
P-00-TIT-1120	I-112	Temperature Indicating Transmitter	UV-AOP Reactor No 2 Discharge Temperature Indicator	NA	UV-AOP Reactor No 2 Skid	Unclassified	NA	120VAC	NA	NA			I-401		
P-00-YS-1120	I-112	Fail Switch	UV-AOP Reactor No 2 Fail Switch	DI	UV-AOP Reactor No 2 Skid	Unclassified			NA	NA	NA				
P-00-FI-1211	I-121	Flow Indicator	ROP Carrier Water Pump No 1 Discharge Flow Indicator	NA	ROP Carrier Water Pump No 1 Discharge Header	Unclassified	NA		NA	NA	TBD	NA	I-106		
P-00-FSL-1210	I-121	Flow Switch Low	ROP Carrier Water Pump No 1 Discharge Flow Switch Low	DI	ROP Carrier Water Pump No 1 Discharge Header	Unclassified	24VDC	24VDC	NA	NA	NA	TBD	I-152		
P-00-LIT-1200	I-121	Level Indicating Transmitter	PFC Carrier Water Tank Level Indicating Transmitter	AI	PFC Carrier Water Tank	Unclassified	NA		NA	NA			I-202		
P-00-PI-1210	I-121	Pressure Gauge	ROP Carrier Water Pump No 1 Discharge Pressure Gauge	NA	ROP Carrier Water Pump No 1 Discharge Header	Unclassified	NA		NA	NA	TBD	NA	I-301		
P-00-FI-1221	I-122	Flow Indicator	ROP Carrier Water Pump No 2 Discharge Flow Indicator	NA	ROP Carrier Water Pump No 2 Discharge Header	Unclassified	NA		NA	NA	TBD	NA	I-106		
P-00-FSL-1220	I-122	Flow Switch Low	ROP Carrier Water Pump No 2 Discharge Flow Switch Low	DI	ROP Carrier Water Pump No 2 Discharge Header	Unclassified	24VDC	24VDC	NA	NA	NA	TBD	I-152		
P-00-PI-1220	I-122	Pressure Gauge	ROP Carrier Water Pump No 2 Discharge Pressure Gauge	NA	ROP Carrier Water Pump No 2 Discharge Header	Unclassified	NA		NA	NA	TBD	NA	I-301		
P-00-FI-1231	I-123	Flow Indicator	ROP Carrier Water Pump No 3 Discharge Flow Indicator	NA	ROP Carrier Water Pump No 3 Discharge Header	Unclassified	NA		NA	NA	TBD	NA	I-106		
P-00-FSL-1230	I-123	Flow Switch Low	ROP Carrier Water Pump No 3 Discharge Flow Switch Low	DI	ROP Carrier Water Pump No 3 Discharge Header	Unclassified	24VDC	24VDC	NA	NA	NA	TBD	I-152		
P-00-PI-1230	I-123	Pressure Gauge	ROP Carrier Water Pump No 3 Discharge Pressure Gauge	NA	ROP Carrier Water Pump No 3 Discharge Header	Unclassified	NA		NA	NA	TBD	NA	I-301		
P-00-LE-1300	I-131	Level Antenna	Acetic ACID Storage Tank Level Element	NA	Acetic ACID Storage Tank	Unclassified	NA		NA	NA	0-30 ft	NA	I-202		
P-00-LIT-1300	I-131	Level Indicating Transmitter	Acetic ACID Storage Tank Level Indicating Transmitter	AI	Acetic ACID Storage Tank	Unclassified	24VDC	24VDC	NA	NA			I-202		
P-00-LSH-1300	I-131	Capacitance Type Level Switch High	Acetic ACID Storage Tank Level Switch High	DI	Acetic ACID Storage Tank	Unclassified			NA	NA	NA		TBD		
P-00-LSH-1301	I-131	Vibrating Fork Level Switch High	Acetic ACID Storage And Dosing Containment Leak	DI	Acetic ACID Storage And Dosing System	Unclassified	24VDC		NA	NA	NA		I-253		
P-00-LSHH-1300	I-131	Float Level Switch High-High	Acetic ACID Storage Tank Level Switch High-High	NA	Acetic ACID Storage Tank	Unclassified	24VDC	24VDC	NA	NA	NA		I-151		
P-00-PI-1310	I-131	Pressure Gauge	Acetic ACID Dosing Pump No 1 Discharge Pressure Gauge	NA	Acetic ACID Dosing Pump No 1 Discharge Header	Unclassified	NA		NA	NA	TBD	NA	I-301		
P-00-PI-1315	I-131	Pressure Gauge	Acetic ACID Dosing Pump No 2 Discharge Pressure Gauge	NA	Acetic ACID Dosing Pump No 2 Discharge Header	Unclassified	NA		NA	NA	TBD	NA	I-301		
P-00-PSH-1310	I-131	Pressure Switch High	Acetic ACID Dosing Pump No 1 Discharge Pressure Switch High	DI	Acetic ACID Dosing Pump No 1 Discharge Header	Unclassified	NA		NA	NA	NA	TBD	I-301		
P-00-PSH-1315	I-131	Pressure Switch High	Acetic ACID Dosing Pump No 2 Discharge Pressure Switch High	DI	Acetic ACID Dosing Pump No 2 Discharge Header	Unclassified	NA		NA	NA	NA	TBD	I-301		
P-00-XS-1310	I-131	Leak Switch	Acetic ACID Dosing Pump No 1 Leak Switch	DI	Acetic ACID Dosing Pump No 1	Unclassified	NA		NA	NA					
P-00-XS-1315	I-131	Leak Switch	Acetic ACID Dosing Pump No 2 Leak Switch	DI	Acetic ACID Dosing Pump No 2	Unclassified	NA		NA	NA					
P-00-LE-1320	I-136	Level Antenna	Liquid Ammonium Sulfate Storage Tank Level Element	NA	Liquid Ammonium Sulfate Storage Tank	Unclassified	NA		NA	NA	0-30 ft	NA	I-202		
P-00-LIT-1320	I-136	Level Indicating Transmitter	Liquid Ammonium Sulfate Storage Tank Level Indicating Transmitter	AI	Liquid Ammonium Sulfate Storage Tank	Unclassified	24VDC	24VDC	NA	NA			I-202		
P-00-LSH-1320	I-136	Capacitance Type Level Switch High	Liquid Ammonium Sulfate Storage Tank Level Switch High	DI	Liquid Ammonium Sulfate Storage Tank	Unclassified			NA	NA	NA		TBD		
P-00-LSH-1321	I-136	Vibrating Fork Level Switch High	Liquid Ammonium Sulfate Storage And Dosing Containment Leak	DI	Liquid Ammonium Sulfate Storage And Transfer System	Unclassified	24VDC		NA	NA	NA		I-253		
P-00-LSHH-1320	I-136	Float Level Switch High-High	Liquid Ammonium Sulfate Storage Tank Level Switch High-High	NA	Liquid Ammonium Sulfate Storage Tank	Unclassified	24VDC	24VDC	NA	NA	NA		I-151		
P-00-PI-1340	I-137	Pressure Gauge	Liquid Ammonium Dosing Pump No 1 Discharge Pressure Gauge	NA	Liquid Ammonium Dosing Pump No 1 Discharge Header	Unclassified	NA		NA	NA	TBD	NA	I-301		
P-00-PI-1345	I-137	Pressure Gauge	Liquid Ammonium Dosing Pump No 2 Discharge Pressure Gauge	NA	Liquid Ammonium Dosing Pump No 2 Discharge Header	Unclassified	NA		NA	NA	TBD	NA	I-301		
P-00-PI-1350	I-137	Pressure Gauge	Liquid Ammonium Dosing Pump No 3 Discharge Pressure Gauge	NA	Liquid Ammonium Dosing Pump No 3 Discharge Header	Unclassified	NA		NA	NA	TBD	NA	I-301		
P-00-PI-1355	I-137	Pressure Gauge	Liquid Ammonium Dosing Pump No 4 Discharge Pressure Gauge	NA	Liquid Ammonium Dosing Pump No 4 Discharge Header	Unclassified	NA		NA	NA	TBD	NA	I-301		
P-00-PSH-1340	I-137	Pressure Switch High	Liquid Ammonium Dosing Pump No 1 Discharge Pressure Switch High	DI	Liquid Ammonium Dosing Pump No 1 Discharge Header	Unclassified	NA		NA	NA	NA	TBD	I-301		
P-00-PSH-1345	I-137	Pressure Switch High	Liquid Ammonium Dosing Pump No 2 Discharge Pressure Switch High	DI	Liquid Ammonium Dosing Pump No 2 Discharge Header	Unclassified	NA		NA	NA	NA	TBD	I-301		
P-00-PSH-1350	I-137	Pressure Switch High	Liquid Ammonium Dosing Pump No 3 Discharge Pressure Switch High	DI	Liquid Ammonium Dosing Pump No 3 Discharge Header	Unclassified	NA		NA	NA	NA	TBD	I-301		
P-00-PSH-1355	I-137	Pressure Switch High	Liquid Ammonium Dosing Pump No 4 Discharge Pressure Switch High	DI	Liquid Ammonium Dosing Pump No 4 Discharge Header	Unclassified	NA		NA	NA	NA	TBD	I-301		
P-00-XS-1340	I-137	Leak Switch	Liquid Ammonium Dosing Pump No 1 Leak Switch	DI	Liquid Ammonium Dosing Pump No 1	Unclassified	NA		NA	NA					
P-00-XS-1345	I-137	Leak Switch	Liquid Ammonium Dosing Pump No 2 Leak Switch	DI	Liquid Ammonium Dosing Pump No 2	Unclassified	NA		NA	NA					
P-00-XS-1350	I-137	Leak Switch	Liquid Ammonium Dosing Pump No 3 Leak Switch	DI	Liquid Ammonium Dosing Pump No 3	Unclassified	NA		NA	NA					
P-00-XS-1355	I-137	Leak Switch	Liquid Ammonium Dosing Pump No 4 Leak Switch	DI	Liquid Ammonium Dosing Pump No 4	Unclassified	NA		NA	NA					
P-00-PI-1365	I-138	Pressure Gauge	Liquid Ammonium Dosing Pump No 5 Discharge Pressure Gauge	NA	Liquid Ammonium Dosing Pump No 5 Discharge Header	Unclassified	NA		NA	NA	TBD	NA	I-301		
P-00-PSH-1365	I-138	Pressure Switch High	Liquid Ammonium Dosing Pump No 5 Discharge Pressure Switch High	DI	Liquid Ammonium Dosing Pump No 5 Discharge Header	Unclassified	NA		NA	NA	NA	TBD	I-301		
P-00-XS-1365	I-138	Leak Switch	Liquid Ammonium Dosing Pump No 5 Leak Switch	DI	Liquid Ammonium Dosing Pump No 5	Unclassified	NA		NA	NA					
P-00-LE-1400	I-141	Level Antenna	Sodium Hypochlorite Storage Tank Level Element	NA	Sodium Hypochlorite Storage Tank	Unclassified	NA		NA	NA	0-30 ft	NA	I-202		
P-00-LIT-1400	I-141	Level Indicating Transmitter	Sodium Hypochlorite Storage Tank Level Indicating Transmitter	AI	Sodium Hypochlorite Storage Tank	Unclassified	24VDC	24VDC	NA	NA			I-202		
P-00-LSH-1400	I-141	Capacitance Type Level Switch High	Sodium Hypochlorite Storage Tank Level Switch High	DI	Sodium Hypochlorite Storage Tank	Unclassified			NA	NA	NA		TBD		
P-00-LSH-1401	I-141	Vibrating Fork Level Switch High	Sodium Hypochlorite Storage Containment Leak	DI	Sodium Hypochlorite Storage System	Unclassified	24VDC	24VDC	NA	NA	NA		I-253		
P-00-LSHH-1400	I-141	Float Level Switch High-High	Sodium Hypochlorite Storage Tank Level Switch High-High	NA	Sodium Hypochlorite Storage Tank	Unclassified	24VDC	24VDC	NA	NA	NA		I-151		
P-00-PI-1404	I-142	Pressure Gauge	Sodium Hypochlorite Dosing Pump No 1 Discharge Pressure Gauge	NA	Sodium Hypochlorite Dosing Pump No 1 Discharge Header	Unclassified	NA		NA	NA	TBD	NA	I-301		
P-00-PI-1405	I-142	Pressure Gauge	Sodium Hypochlorite Dosing Pump No 2 Discharge Pressure Gauge	NA	Sodium Hypochlorite Dosing Pump No 2 Discharge Header	Unclassified	NA		NA	NA	TBD	NA	I-301		
P-00-PSH-1404	I-142	Pressure Switch High	Sodium Hypochlorite Dosing Pump No 1 Discharge Pressure Switch High	DI	Sodium Hypochlorite Dosing Pump No 1 Discharge Header	Unclassified	NA		NA	NA	NA	TBD	I-301		
P-00-PSH-1405	I-142	Pressure Switch High	Sodium Hypochlorite Dosing Pump No 2 Discharge Pressure Switch High	DI	Sodium Hypochlorite Dosing Pump No 2 Discharge Header	Unclassified	NA		NA	NA	NA	TBD	I-301		
P-00-XS-1404	I-142	Leak Switch	Sodium Hypochlorite Dosing Pump No 1 Leak Switch	DI	Sodium Hypochlorite Dosing Pump No 1	Unclassified	NA		NA	NA					
P-00-XS-1405	I-142	Leak Switch	Sodium Hypochlorite Dosing Pump No 2 Leak Switch	DI	Sodium Hypochlorite Dosing Pump No 2	Unclassified	NA		NA	NA					
P-00-PI-1421	I-143	Pressure Gauge	Sodium Hypochlorite Dosing Pump No 3 Discharge Pressure Gauge	NA	Sodium Hypochlorite Dosing Pump No 3 Discharge Header	Unclassified	NA		NA	NA	TBD	NA	I-301		
P-00-PI-1422	I-143	Pressure Gauge	Sodium Hypochlorite Dosing Pump No 4 Discharge Pressure Gauge	NA	Sodium Hypochlorite Dosing Pump No 4 Discharge Header	Unclassified	NA		NA	NA	TBD	NA	I-301		
P-00-PI-1423	I-143	Pressure Gauge	Sodium Hypochlorite Dosing Pump No 5 Discharge Pressure Gauge	NA	Sodium Hypochlorite Dosing Pump No 5 Discharge Header	Unclassified	NA		NA	NA	TBD	NA	I-301		
P-00-PI-1424	I-143	Pressure Gauge	Sodium Hypochlorite Dosing Pump No 6 Discharge Pressure Gauge	NA	Sodium Hypochlorite Dosing Pump No 6 Discharge Header	Unclassified	NA		NA	NA	TBD	NA	I-301		
P-00-PSH-1421	I-143	Pressure Switch High	Sodium Hypochlorite Dosing Pump No 3 Discharge Pressure Switch High	DI	Sodium Hypochlorite Dosing Pump No 3 Discharge Header	Unclassified	NA		NA	NA	NA	TBD	I-301		
P-00-PSH-1422	I-143	Pressure Switch High	Sodium Hypochlorite Dosing Pump No 4 Discharge Pressure Switch High	DI	Sodium Hypochlorite Dosing Pump No 4 Discharge Header	Unclassified	NA		NA	NA	NA	TBD	I-301		

Instrument Tag	Drawing Number	Instrument Type	Service Description	IO Type	Location	Area Classification	Signal Detail	Req. Power Supply	LSA Req	Sunshield Req	Calibrated Range	Instrument Setpoint	Installation Detail Ref.	Comments	Revision
P-00-PSH-1423	I-143	Pressure Switch High	Sodium Hypochlorite Dosing Pump No 5 Discharge Pressure Switch High	DI	Sodium Hypochlorite Dosing Pump No 5 Discharge Header	Unclassified	NA		NA	NA	NA	TBD	I-301		
P-00-PSH-1424	I-143	Pressure Switch High	Sodium Hypochlorite Dosing Pump No 6 Discharge Pressure Switch High	DI	Sodium Hypochlorite Dosing Pump No 6 Discharge Header	Unclassified	NA		NA	NA	NA	TBD	I-301		
P-00-XS-1421	I-143	Leak Switch	Sodium Hypochlorite Dosing Pump No 3 Leak Switch	DI	Sodium Hypochlorite Dosing Pump No 3	Unclassified	NA		NA	NA					
P-00-XS-1422	I-143	Leak Switch	Sodium Hypochlorite Dosing Pump No 4 Leak Switch	DI	Sodium Hypochlorite Dosing Pump No 4	Unclassified	NA		NA	NA					
P-00-XS-1423	I-143	Leak Switch	Sodium Hypochlorite Dosing Pump No 5 Leak Switch	DI	Sodium Hypochlorite Dosing Pump No 5	Unclassified	NA		NA	NA					
P-00-XS-1424	I-143	Leak Switch	Sodium Hypochlorite Dosing Pump No 6 Leak Switch	DI	Sodium Hypochlorite Dosing Pump No 6	Unclassified	NA		NA	NA					
P-00-PI-1425	I-144	Pressure Gauge	Sodium Hypochlorite Dosing Pump No 7 Discharge Pressure Gauge	NA	Sodium Hypochlorite Dosing Pump No 7 Discharge Header	Unclassified	NA		NA	NA	TBD	NA	I-301		
P-00-PI-1426	I-144	Pressure Gauge	Sodium Hypochlorite Dosing Pump No 8 Discharge Pressure Gauge	NA	Sodium Hypochlorite Dosing Pump No 8 Discharge Header	Unclassified	NA		NA	NA	TBD	NA	I-301		
P-00-PI-1427	I-144	Pressure Gauge	Sodium Hypochlorite Dosing Pump No 9 Discharge Pressure Gauge	NA	Sodium Hypochlorite Dosing Pump No 9 Discharge Header	Unclassified	NA		NA	NA	TBD	NA	I-301		
P-00-PI-1428	I-144	Pressure Gauge	Sodium Hypochlorite Dosing Pump No 10 Discharge Pressure Gauge	NA	Sodium Hypochlorite Dosing Pump No 10 Discharge Header	Unclassified	NA		NA	NA	TBD	NA	I-301		
P-00-PSH-1425	I-144	Pressure Switch High	Sodium Hypochlorite Dosing Pump No 7 Discharge Pressure Switch High	DI	Sodium Hypochlorite Dosing Pump No 7 Discharge Header	Unclassified	NA		NA	NA	NA	TBD	I-301		
P-00-PSH-1426	I-144	Pressure Switch High	Sodium Hypochlorite Dosing Pump No 8 Discharge Pressure Switch High	DI	Sodium Hypochlorite Dosing Pump No 8 Discharge Header	Unclassified	NA		NA	NA	NA	TBD	I-301		
P-00-PSH-1427	I-144	Pressure Switch High	Sodium Hypochlorite Dosing Pump No 9 Discharge Pressure Switch High	DI	Sodium Hypochlorite Dosing Pump No 9 Discharge Header	Unclassified	NA		NA	NA	NA	TBD	I-301		
P-00-PSH-1428	I-144	Pressure Switch High	Sodium Hypochlorite Dosing Pump No 10 Discharge Pressure Switch High	DI	Sodium Hypochlorite Dosing Pump No 10 Discharge Header	Unclassified	NA		NA	NA	NA	TBD	I-301		
P-00-XS-1425	I-144	Leak Switch	Sodium Hypochlorite Dosing Pump No 7 Leak Switch	DI	Sodium Hypochlorite Dosing Pump No 7	Unclassified	NA		NA	NA					
P-00-XS-1426	I-144	Leak Switch	Sodium Hypochlorite Dosing Pump No 8 Leak Switch	DI	Sodium Hypochlorite Dosing Pump No 8	Unclassified	NA		NA	NA					
P-00-XS-1427	I-144	Leak Switch	Sodium Hypochlorite Dosing Pump No 9 Leak Switch	DI	Sodium Hypochlorite Dosing Pump No 9	Unclassified	NA		NA	NA					
P-00-XS-1428	I-144	Leak Switch	Sodium Hypochlorite Dosing Pump No 10 Leak Switch	DI	Sodium Hypochlorite Dosing Pump No 10	Unclassified	NA		NA	NA					
P-00-LE-1440	I-146	Level Antenna	Sulfuric ACID Storage Tank Level Element	NA	Sulfuric ACID Storage Tank	Unclassified	NA		NA	NA	0-30 ft	NA	I-202		
P-00-LIT-1440	I-146	Level Indicating Transmitter	Sulfuric ACID Storage Tank Level Indicating Transmitter	AI	Sulfuric ACID Storage Tank	Unclassified	24VDC	24VDC	NA	NA			I-202		
P-00-LSH-1440	I-146	Capacitance Type Level Switch High	Sulfuric ACID Storage Tank Level Switch High	DI	Sulfuric ACID Storage Tank	Unclassified			NA	NA	NA		TBD		
P-00-LSH-1441	I-146	Vibrating Fork Level Switch High	Sulfuric ACID Storage And Dosing Containment Leak	DI	Sulfuric ACID Storage And Dosing System - I	Unclassified	24VDC	24VDC	NA	NA	NA		I-253		
P-00-LSHH-1440	I-146	Float Level Switch High-High	Sulfuric ACID Storage Tank Level Switch High-High	NA	Sulfuric ACID Storage Tank	Unclassified	24VDC	24VDC	NA	NA	NA		I-151		
P-00-PI-1441	I-146	Pressure Gauge	Sulfuric ACID Dosing Pump No 1 Discharge Pressure Gauge	NA	Sulfuric ACID Dosing Pump No 1 Discharge Header	Unclassified	NA		NA	NA	TBD	NA	I-301		
P-00-PSH-1441	I-146	Pressure Switch High	Sulfuric ACID Dosing Pump No 1 Discharge Pressure Switch High	DI	Sulfuric ACID Dosing Pump No 1 Discharge Header	Unclassified	NA		NA	NA	NA	TBD	I-301		
P-00-XS-1441	I-146	Leak Switch	Sulfuric ACID Dosing Pump No 1 Leak Switch	DI	Sulfuric ACID Dosing Pump No 1	Unclassified	NA		NA	NA					
P-00-PI-1444	I-147	Pressure Gauge	Sulfuric ACID Dosing Pump No 2 Discharge Pressure Gauge	NA	Sulfuric ACID Dosing Pump No 2 Discharge Header	Unclassified	NA		NA	NA	TBD	NA	I-301		
P-00-PSH-1444	I-147	Pressure Switch High	Sulfuric ACID Dosing Pump No 2 Discharge Pressure Switch High	DI	Sulfuric ACID Dosing Pump No 2 Discharge Header	Unclassified	NA		NA	NA	NA	TBD	I-301		
P-00-XS-1444	I-147	Leak Switch	Sulfuric ACID Dosing Pump No 2 Leak Switch	DI	Sulfuric ACID Dosing Pump No 2	Unclassified	NA		NA	NA					
P-00-PI-1446	I-148	Pressure Gauge	Sulfuric ACID Dosing Pump No 3 Discharge Pressure Gauge	NA	Sulfuric ACID Dosing Pump No 3 Discharge Header	Unclassified	NA		NA	NA	TBD	NA	I-301		
P-00-PI-1447	I-148	Pressure Gauge	Sulfuric ACID Dosing Pump No 4 Discharge Pressure Gauge	NA	Sulfuric ACID Dosing Pump No 4 Discharge Header	Unclassified	NA		NA	NA	TBD	NA	I-301		
P-00-PSH-1446	I-148	Pressure Switch High	Sulfuric ACID Dosing Pump No 3 Discharge Pressure Switch High	DI	Sulfuric ACID Dosing Pump No 3 Discharge Header	Unclassified	NA		NA	NA	NA	TBD	I-301		
P-00-PSH-1447	I-148	Pressure Switch High	Sulfuric ACID Dosing Pump No 4 Discharge Pressure Switch High	DI	Sulfuric ACID Dosing Pump No 4 Discharge Header	Unclassified	NA		NA	NA	NA	TBD	I-301		
P-00-XS-1446	I-148	Leak Switch	Sulfuric ACID Dosing Pump No 3 Leak Switch	DI	Sulfuric ACID Dosing Pump No 3	Unclassified	NA		NA	NA					
P-00-XS-1447	I-148	Leak Switch	Sulfuric ACID Dosing Pump No 4 Leak Switch	DI	Sulfuric ACID Dosing Pump No 4	Unclassified	NA		NA	NA					
P-00-LE-1500	I-151	Level Antenna	Sodium Bisulfite Storage Tank Level Element	NA	Sodium Bisulfite Storage Tank	Unclassified	NA		NA	NA	0-30 ft	NA	I-202		
P-00-LIT-1500	I-151	Level Indicating Transmitter	Sodium Bisulfite Storage Tank Level Indicating Transmitter	AI	Sodium Bisulfite Storage Tank	Unclassified	24VDC	24VDC	NA	NA			I-202		
P-00-LSH-1500	I-151	Capacitance Type Level Switch High	Sodium Bisulfite Storage Tank Level Switch High	DI	Sodium Bisulfite Storage Tank	Unclassified			NA	NA	NA		TBD		
P-00-LSH-1501	I-151	Vibrating Fork Level Switch High	Sodium Bisulfite Storage And Dosing Containment Leak	DI	Sodium Bisulfite Storage And Dosing System	Unclassified	24VDC	24VDC	NA	NA	NA		I-253		
P-00-LSHH-1500	I-151	Float Level Switch High-High	Sodium Bisulfite Storage Tank Level Switch High-High	NA	Sodium Bisulfite Storage Tank	Unclassified	24VDC	24VDC	NA	NA	NA		I-151		
P-00-PI-1505	I-151	Pressure Gauge	Sodium Bisulfite Dosing Pump No 1 Discharge Pressure Gauge	NA	Sodium Bisulfite Dosing Pump No 1 Discharge Header	Unclassified	NA		NA	NA	TBD	NA	I-301		
P-00-PI-1510	I-151	Pressure Gauge	Sodium Bisulfite Dosing Pump No 2 Discharge Pressure Gauge	NA	Sodium Bisulfite Dosing Pump No 2 Discharge Header	Unclassified	NA		NA	NA	TBD	NA	I-301		
P-00-PSH-1505	I-151	Pressure Switch High	Sodium Bisulfite Dosing Pump No 1 Discharge Pressure Switch High	DI	Sodium Bisulfite Dosing Pump No 1 Discharge Header	Unclassified	NA		NA	NA	NA	TBD	I-301		
P-00-PSH-1510	I-151	Pressure Switch High	Sodium Bisulfite Dosing Pump No 2 Discharge Pressure Switch High	DI	Sodium Bisulfite Dosing Pump No 2 Discharge Header	Unclassified	NA		NA	NA	NA	TBD	I-301		
P-00-XS-1505	I-151	Leak Switch	Sodium Bisulfite Dosing Pump No 1 Leak Switch	DI	Sodium Bisulfite Dosing Pump No 1	Unclassified	NA		NA	NA					
P-00-XS-1510	I-151	Leak Switch	Sodium Bisulfite Dosing Pump No 2 Leak Switch	DI	Sodium Bisulfite Dosing Pump No 2	Unclassified	NA		NA	NA					
P-00-PI-1525	I-153	Pressure Gauge	Sodium Bisulfite Dosing Pump No 3 Discharge Pressure Gauge	NA	Sodium Bisulfite Dosing Pump No 3 Discharge Header	Unclassified	NA		NA	NA	TBD	NA	I-301		
P-00-PSH-1525	I-153	Pressure Switch High	Sodium Bisulfite Dosing Pump No 3 Discharge Pressure Switch High	DI	Sodium Bisulfite Dosing Pump No 3 Discharge Header	Unclassified	NA		NA	NA	NA	TBD	I-301		
P-00-XS-1525	I-153	Leak Switch	Sodium Bisulfite Dosing Pump No 3 Leak Switch	DI	Sodium Bisulfite Dosing Pump No 3	Unclassified	NA		NA	NA					
P-00-LE-1540	I-156	Level Antenna	Citric ACID Storage Tank Level Element	NA	Citric ACID Storage Tank	Unclassified	NA		NA	NA	0-30 ft	NA	I-202		
P-00-LIT-1540	I-156	Level Indicating Transmitter	Citric ACID Storage Tank Level Indicating Transmitter	AI	Citric ACID Storage Tank	Unclassified	24VDC	24VDC	NA	NA			I-202		
P-00-LSH-1540	I-156	Capacitance Type Level Switch High	Citric ACID Storage Tank Level Switch High	DI	Citric ACID Storage Tank	Unclassified			NA	NA	NA		TBD		
P-00-LSH-1541	I-156	Vibrating Fork Level Switch High	Citric ACID Storage And Transfer Containment Leak	DI	Citric ACID Storage And Transfer System	Unclassified	24VDC	24VDC	NA	NA	NA		I-253		
P-00-LSHH-1540	I-156	Float Level Switch High-High	Citric ACID Storage Tank Level Switch High-High	NA	Citric ACID Storage Tank	Unclassified	24VDC	24VDC	NA	NA	NA		I-151		
P-00-PI-1545	I-156	Pressure Gauge	Citric ACID Transfer Pump No 1 Discharge Pressure Gauge	NA	Citric ACID Transfer Pump Skid	Unclassified	NA		NA	NA	TBD	NA	I-301		
P-00-PSH-1545	I-156	Pressure Switch High	Citric ACID Transfer Pump No 1 Discharge Pressure Switch High	DI	Citric ACID Transfer Pump Skid	Unclassified	NA		NA	NA	NA	TBD	I-301		
P-00-XS-1545	I-156	Leak Switch	Citric ACID Transfer Pump No 1 Leak Switch	DI	Citric ACID Transfer Pump Skid	Unclassified	NA		NA	NA					
P-00-PI-1560	I-157	Pressure Gauge	Citric ACID Dosing Pump No 1 Discharge Pressure Gauge	NA	Citric ACID Dosing Pump No 1 Discharge Header	Unclassified	NA		NA	NA	TBD	NA	I-301		
P-00-PSH-1560	I-157	Pressure Switch High	Citric ACID Dosing Pump No 1 Discharge Pressure Switch High	DI	Citric ACID Dosing Pump No 1 Discharge Header	Unclassified	NA		NA	NA	NA	TBD	I-301		
P-00-XS-1560	I-157	Leak Switch	Citric ACID Dosing Pump No 1 Leak Switch	DI	Citric ACID Dosing Pump No 1	Unclassified	NA		NA	NA					
P-00-LE-1600	I-161	Level Antenna	Sodium Hydroxide Storage Tank Level Element	NA	Sodium Hydroxide Storage Tank	Unclassified	NA		NA	NA	0-30 ft	NA	I-202		
P-00-LIT-1600	I-161	Level Indicating Transmitter	Sodium Hydroxide Storage Tank Level Indicating Transmitter	AI	Sodium Hydroxide Storage Tank	Unclassified	24VDC	24VDC	NA	NA			I-202		
P-00-LSH-1601	I-161	Vibrating Fork Level Switch High	Sodium Hydroxide Storage Containment Leak	DI	Sodium Hydroxide Storage System	Unclassified	24VDC	24VDC	NA	NA	NA		I-253		
P-00-LSH-1602	I-161	Capacitance Type Level Switch High	Sodium Hydroxide Storage Tank Level Switch High	DI	Sodium Hydroxide Storage Tank	Unclassified			NA	NA	NA		TBD		
P-00-LSHH-1600	I-161	Float Level Switch High-High	Sodium Hydroxide Storage Tank Level Switch High-High	NA	Sodium Hydroxide Storage Tank	Unclassified	24VDC	24VDC	NA	NA	NA		I-151		
P-00-PI-1603	I-162	Pressure Gauge	Sodium Hydroxide Dosing Pump No 1 Discharge Pressure Gauge	NA	Sodium Hydroxide Dosing Pump No 1 Discharge Header	Unclassified	NA		NA	NA	TBD	NA	I-301		
P-00-PSH-1603	I-162	Pressure Switch High	Sodium Hydroxide Dosing Pump No 1 Discharge Pressure Switch High	DI	Sodium Hydroxide Dosing Pump No 1 Discharge Header	Unclassified	NA		NA	NA	NA	TBD	I-301		
P-00-XS-1603	I-162	Leak Switch	Sodium Hydroxide Dosing Pump No 1 Leak Switch	DI	Sodium Hydroxide Dosing Pump No 1	Unclassified	NA		NA	NA					

Instrument Tag	Drawing Number	Instrument Type	Service Description	IO Type	Location	Area Classification	Signal Detail	Req. Power Supply	LSA Req	Sunshield Req	Calibrated Range	Instrument Setpoint	Installation Detail Ref.	Comments	Revision
P-00-PI-1611	I-163	Pressure Gauge	Sodium Hydroxide Dosing Pump No 2 Discharge Pressure Gauge	NA	Sodium Hydroxide Dosing Pump No 2 Discharge Header	Unclassified	NA		NA	NA	TBD	NA	I-301		
P-00-PI-1612	I-163	Pressure Gauge	Sodium Hydroxide Dosing Pump No 3 Discharge Pressure Gauge	NA	Sodium Hydroxide Dosing Pump No 3 Discharge Header	Unclassified	NA		NA	NA	TBD	NA	I-301		
P-00-PI-1613	I-163	Pressure Gauge	Sodium Hydroxide Dosing Pump No 4 Discharge Pressure Gauge	NA	Sodium Hydroxide Dosing Pump No 4 Discharge Header	Unclassified	NA		NA	NA	TBD	NA	I-301		
P-00-PI-1614	I-163	Pressure Gauge	Sodium Hydroxide Dosing Pump No 5 Discharge Pressure Gauge	NA	Sodium Hydroxide Dosing Pump No 5 Discharge Header	Unclassified	NA		NA	NA	TBD	NA	I-301		
P-00-PSH-1611	I-163	Pressure Switch High	Sodium Hydroxide Dosing Pump No 2 Discharge Pressure Switch High	DI	Sodium Hydroxide Dosing Pump No 2 Discharge Header	Unclassified	NA		NA	NA	NA	TBD	I-301		
P-00-PSH-1612	I-163	Pressure Switch High	Sodium Hydroxide Dosing Pump No 3 Discharge Pressure Switch High	DI	Sodium Hydroxide Dosing Pump No 3 Discharge Header	Unclassified	NA		NA	NA	NA	TBD	I-301		
P-00-PSH-1613	I-163	Pressure Switch High	Sodium Hydroxide Dosing Pump No 4 Discharge Pressure Switch High	DI	Sodium Hydroxide Dosing Pump No 4 Discharge Header	Unclassified	NA		NA	NA	NA	TBD	I-301		
P-00-PSH-1614	I-163	Pressure Switch High	Sodium Hydroxide Dosing Pump No 5 Discharge Pressure Switch High	DI	Sodium Hydroxide Dosing Pump No 5 Discharge Header	Unclassified	NA		NA	NA	NA	TBD	I-301		
P-00-XS-1611	I-163	Leak Switch	Sodium Hydroxide Dosing Pump No 2 Leak Switch	DI	Sodium Hydroxide Dosing Pump No 2	Unclassified	NA		NA	NA					
P-00-XS-1612	I-163	Leak Switch	Sodium Hydroxide Dosing Pump No 3 Leak Switch	DI	Sodium Hydroxide Dosing Pump No 3	Unclassified	NA		NA	NA					
P-00-XS-1613	I-163	Leak Switch	Sodium Hydroxide Dosing Pump No 4 Leak Switch	DI	Sodium Hydroxide Dosing Pump No 4	Unclassified	NA		NA	NA					
P-00-XS-1614	I-163	Leak Switch	Sodium Hydroxide Dosing Pump No 5 Leak Switch	DI	Sodium Hydroxide Dosing Pump No 5	Unclassified	NA		NA	NA					
P-00-PI-1615	I-164	Pressure Gauge	Sodium Hydroxide Dosing Pump No 6 Discharge Pressure Gauge	NA	Sodium Hydroxide Dosing Pump No 6 Discharge Header	Unclassified	NA		NA	NA	TBD	NA	I-301		
P-00-PI-1616	I-164	Pressure Gauge	Sodium Hydroxide Dosing Pump No 7 Discharge Pressure Gauge	NA	Sodium Hydroxide Dosing Pump No 7 Discharge Header	Unclassified	NA		NA	NA	TBD	NA	I-301		
P-00-PSH-1615	I-164	Pressure Switch High	Sodium Hydroxide Dosing Pump No 6 Discharge Pressure Switch High	DI	Sodium Hydroxide Dosing Pump No 6 Discharge Header	Unclassified	NA		NA	NA	NA	TBD	I-301		
P-00-PSH-1616	I-164	Pressure Switch High	Sodium Hydroxide Dosing Pump No 7 Discharge Pressure Switch High	DI	Sodium Hydroxide Dosing Pump No 7 Discharge Header	Unclassified	NA		NA	NA	NA	TBD	I-301		
P-00-XS-1615	I-164	Leak Switch	Sodium Hydroxide Dosing Pump No 6 Leak Switch	DI	Sodium Hydroxide Dosing Pump No 6	Unclassified	NA		NA	NA					
P-00-XS-1616	I-164	Leak Switch	Sodium Hydroxide Dosing Pump No 7 Leak Switch	DI	Sodium Hydroxide Dosing Pump No 7	Unclassified	NA		NA	NA					
P-00-LSH-1636	I-166	Vibrating Fork Level Switch High	Antiscalant System Storage Containment Leak	DI	Antiscalant System Storage And Dosing System	Unclassified	24VDC	24VDC	NA	NA	NA		I-253		
P-00-PI-1631	I-166	Pressure Gauge	Antiscalant Dosing Pump No 1 Discharge Pressure Gauge	NA	Antiscalant Dosing Pump No 1 Discharge Header	Unclassified	NA		NA	NA	TBD	NA	I-301		
P-00-PI-1632	I-166	Pressure Gauge	Antiscalant Dosing Pump No 2 Discharge Pressure Gauge	NA	Antiscalant Dosing Pump No 2 Discharge Header	Unclassified	NA		NA	NA	TBD	NA	I-301		
P-00-PI-1633	I-166	Pressure Gauge	Antiscalant Dosing Pump No 3 Discharge Pressure Gauge	NA	Antiscalant Dosing Pump No 3 Discharge Header	Unclassified	NA		NA	NA	TBD	NA	I-301		
P-00-PI-1634	I-166	Pressure Gauge	Antiscalant Dosing Pump No 4 Discharge Pressure Gauge	NA	Antiscalant Dosing Pump No 4 Discharge Header	Unclassified	NA		NA	NA	TBD	NA	I-301		
P-00-PSH-1631	I-166	Pressure Switch High	Antiscalant Dosing Pump No 1 Discharge Pressure Switch High	DI	Antiscalant Dosing Pump No 1 Discharge Header	Unclassified	NA		NA	NA	NA	TBD	I-301		
P-00-PSH-1632	I-166	Pressure Switch High	Antiscalant Dosing Pump No 2 Discharge Pressure Switch High	DI	Antiscalant Dosing Pump No 2 Discharge Header	Unclassified	NA		NA	NA	NA	TBD	I-301		
P-00-PSH-1633	I-166	Pressure Switch High	Antiscalant Dosing Pump No 3 Discharge Pressure Switch High	DI	Antiscalant Dosing Pump No 3 Discharge Header	Unclassified	NA		NA	NA	NA	TBD	I-301		
P-00-PSH-1634	I-166	Pressure Switch High	Antiscalant Dosing Pump No 4 Discharge Pressure Switch High	DI	Antiscalant Dosing Pump No 4 Discharge Header	Unclassified	NA		NA	NA	NA	TBD	I-301		
P-00-XS-1631	I-166	Leak Switch	Antiscalant Dosing Pump No 1 Leak Switch	DI	Antiscalant Dosing Pump No 1	Unclassified	NA		NA	NA					
P-00-XS-1632	I-166	Leak Switch	Antiscalant Dosing Pump No 2 Leak Switch	DI	Antiscalant Dosing Pump No 2	Unclassified	NA		NA	NA					
P-00-XS-1633	I-166	Leak Switch	Antiscalant Dosing Pump No 3 Leak Switch	DI	Antiscalant Dosing Pump No 3	Unclassified	NA		NA	NA					
P-00-XS-1634	I-166	Leak Switch	Antiscalant Dosing Pump No 4 Leak Switch	DI	Antiscalant Dosing Pump No 4	Unclassified	NA		NA	NA					
P-00-AE-210	I-27	Dew Point Analyzer Element	Instrument Air DEW Analyzer Element	NA	Plant Air Compressor Skid	Unclassified	NA		NA	NA			I-501		
P-00-AIT-210	I-27	Dew Point Analyzer Indicating Transmitter	Instrument Air DEW Analyzer Indicating Transmitter	AI	Plant Air Compressor Skid	Unclassified	AI		Yes	Yes			I-501		
P-00-PI-200	I-27	Pressure Gauge	Instrument Air Dryer Suction Pressure Gauge	NA	Plant Air Compressor Skid	Unclassified	NA		NA	NA	TBD	NA	I-301		
P-00-PI-210A	I-27	Pressure Gauge	Instrument Air Dryer Pressure Gauge No 1	NA	Plant Air Compressor Skid	Unclassified	NA		NA	NA	TBD	NA	I-301		
P-00-PI-210B	I-27	Pressure Gauge	Instrument Air Dryer Pressure Gauge No 2	NA	Plant Air Compressor Skid	Unclassified	NA		NA	NA	TBD	NA	I-301		
P-00-PI-220	I-27	Pressure Gauge	Air Receiver Tank Pressure Gauge	NA	Plant Air Receiver Tank	Unclassified	NA		NA	NA	TBD	NA	I-301		
P-00-PIT-220	I-27	Pressure Indicating Transmitter	Air Receiver Tank Pressure Indicating Transmitter	AI	Plant Air Receiver Tank	Unclassified	4-20mA HART		NA	NA	0 - 15 psig [VTC]	NA	I-303		
P-00-PIT-221	I-27	Pressure Indicating Transmitter	Air Receiver Discharge Pressure Indicating Transmitter	AI	Plant Air Receiver Discharge Header	Unclassified	4-20mA HART		NA	NA	0 - 15 psig [VTC]	NA	I-303		
P-00-PSH-200	I-27	Pressure Switch High	Rotary Screw Compressor Discharge Pressure Switch High	DI	Plant Rotary Screw Compressor Discharge Header	Unclassified	120VAC		NA	NA	NA	TBD	I-301		
P-00-PSL-200	I-27	Pressure Switch Low	Rotary Screw Compressor Discharge Pressure Switch Low	DI	Plant Rotary Screw Compressor Discharge Header	Unclassified	120VAC		NA	NA					
P-00-FSH-230	I-28	Flow Switch High	Sodium Bisulfite Eywash Flow Switch High	DI	Potable Water Distribution System	Unclassified	120VAC	24VDC	NA	NA	NA	TBD	I-152		
P-00-FSH-231	I-28	Flow Switch High	Acetic ACID Flow Switch High	DI	Potable Water Distribution System	Unclassified	120VAC	24VDC	NA	NA	NA	TBD	I-152		
P-00-FSH-232	I-28	Flow Switch High	Sodium Hydroxide Flow Switch High	DI	Potable Water Distribution System	Unclassified	120VAC	24VDC	NA	NA	NA	TBD	I-152		
P-00-FSH-233	I-28	Flow Switch High	MBR CIP Chemicals Flow Switch High	DI	Potable Water Distribution System	Unclassified	120VAC	24VDC	NA	NA	NA	TBD	I-152		
P-00-FSH-234	I-28	Flow Switch High	Ozone Area Flow Switch High	DI	Potable Water Distribution System	Unclassified	120VAC	24VDC	NA	NA	NA	TBD	I-152		
P-00-FSH-235	I-28	Flow Switch High	Ozone Area Flow Switch High	DI	Potable Water Distribution System	Unclassified	120VAC	24VDC	NA	NA	NA	TBD	I-152		
P-00-LSH-241	I-30	Float Level Switch High	Plant Drain Sump Level Switch High	NA	Plant Drain Sump	Unclassified	120VAC		NA	NA	NA		I-151		
P-00-LSHH-241	I-30	Float Level Switch High-High	Plant Drain Sump Level Switch High-High	NA	Plant Drain Sump	Unclassified	120VAC		NA	NA	NA		I-151		
P-00-LSL-241	I-30	Float Level Switch Low	Plant Drain Sump Level Switch Low	NA	Plant Drain Sump	Unclassified	120VAC		NA	NA	NA		I-151		
P-00-LSLL-241	I-30	Float Level Switch Low-Low	Plant Drain Sump Level Switch Low-Low	NA	Plant Drain Sump	Unclassified	120VAC		NA	NA	NA	3 ft	I-151		
P-00-PI-240	I-30	Pressure Gauge	Plant Drain Pump No 1 Discharge Pressure Gauge	NA	Plant Drain Sump	Unclassified	NA		NA	NA	TBD	NA	I-301		
P-00-PI-250	I-30	Pressure Gauge	Plant Drain Pump No 2 Discharge Pressure Gauge	NA	Plant Drain Sump	Unclassified	NA		NA	NA	TBD	NA	I-301		
P-00-TSH-240	I-30	Temperature Switch High	Plant Drain Pump No 1 Temperature Switch High	DI	Plant Drain Sump	Unclassified	120VAC		NA	NA	NA	NA	I-401		
P-00-TSH-250	I-30	Temperature Switch High	Plant Drain Pump No 2 Temperature Switch High	DI	Plant Drain Sump	Unclassified	120VAC		NA	NA	NA	NA	I-401		
P-00-XS-240	I-30	Leak Switch	Plant Drain Pump No 1 Leak Switch	DI	Plant Drain Sump	Unclassified	NA		NA	NA					
P-00-XS-250	I-30	Leak Switch	Plant Drain Pump No 2 Leak Switch	DI	Plant Drain Sump	Unclassified	NA		NA	NA					
P-00-FE-320	I-31	Electromagnetic Flow Meter	Primary Effluent Pump Discharge Flow Element	NA	Influent Pumping Station	Unclassified	NA		NA	NA		NA	I-101		
P-00-FIT-320	I-31	Electromagnetic Flow Indicating Transmitter	Primary Effluent Pump Discharge Flow Indicating Transmitter	AI	Influent Pumping Station	Unclassified	4-20mA HART	24VDC	NA	NA		NA	I-101		
P-00-PI-300	I-31	Pressure Gauge	Primary Effluent Pump Suction Discharge Pressure Gauge	NA	Influent Pumping Station	Unclassified	NA		NA	NA	TBD	NA	I-301		
P-00-PI-310	I-31	Pressure Gauge	Primary Influent Pump Discharge Pressure Gauge	NA	Influent Pumping Station	Unclassified	NA		NA	NA	TBD	NA	I-301		
P-00-PI-320A	I-31	Pressure Gauge	Primary Effluent Pump Suction Line Pressure Gauge	NA	Influent Pumping Station	Unclassified	NA		NA	NA	TBD	NA	I-301		
P-00-PI-320B	I-31	Pressure Gauge	Primary Effluent Pump Discharge Pressure Gauge	NA	Influent Pumping Station	Unclassified	NA		NA	NA	TBD	NA	I-301		
P-00-PSH-310	I-31	Pressure Switch High	Primary Influent Pump Discharge Pressure Switch High	DI	Influent Pumping Station	Unclassified	120VAC		NA	NA	NA	TBD	I-301		
P-00-PSH-320	I-31	Pressure Switch High	Primary Effluent Pump Discharge Pressure Switch High	DI	Influent Pumping Station	Unclassified	120VAC		NA	NA	NA	TBD	I-301		
P-00-TSH-300	I-31	Temperature Switch High	Grinder Temperature Switch High	DI	Influent Pumping Station	Unclassified	120VAC		NA	NA	NA	NA	I-401		
P-00-TSH-310	I-31	Temperature Switch High	Primary Influent Pump Temperature Switch High	DI	Influent Pumping Station	Unclassified	120VAC		NA	NA	NA	NA	I-401		
P-00-TSH-320	I-31	Temperature Switch High	Primary Effluent Pump Temperature Switch High	DI	Influent Pumping Station	Unclassified	120VAC		NA	NA	NA	NA	I-401		

Instrument Tag	Drawing Number	Instrument Type	Service Description	IO Type	Location	Area Classification	Signal Detail	Req. Power Supply	LSA Req	Sunshield Req	Calibrated Range	Instrument Setpoint	Installation Detail Ref.	Comments	Revision
P-00-FE-333	I-32	Electromagnetic Flow Meter	Primary Influent Self-Cleaning Strainer Discharge Flow Element	NA	Primary influent Pretreatment	Unclassified	NA		NA	NA		NA	I-101		
P-00-FIT-333	I-32	Electromagnetic Flow Indicating Transmitter	Primary Influent Self-Cleaning Strainer Discharge Flow Indicating Transmitter	AI	Primary influent Pretreatment	Unclassified	4-20mA HART	24VDC	NA	NA		NA	I-101		
P-00-FSL-330A	I-32	Flow Switch Low	Primary Influent Self-Cleaning Strainer Discharge Flow Switch Low	DI	Primary Influent Self-Cleaning Strainer Package	Unclassified	24VDC	24VDC	NA	NA	NA	TBD	I-152		
P-00-FSL-330B	I-32	Flow Switch Low	Primary Influent Self-Cleaning Strainer Drain Discharge Flow Switch Low	DI	Primary Influent Self-Cleaning Strainer Package	Unclassified	24VDC	24VDC	NA	NA	NA	TBD	I-152		
P-00-PDSH-330	I-32	Differential Pressure Switch High	Primary Influent Self-Cleaning Strainer Differential Pressure Switch High	DI	Primary Influent Self-Cleaning Strainer Package	Unclassified	120VAC		NA	NA					
P-00-PI-330A	I-32	Pressure Gauge	Primary Influent Self-Cleaning Strainer Inlet Pressure Gauge	NA	Primary Influent Self-Cleaning Strainer Package	Unclassified	NA		NA	NA	TBD	NA	I-301		
P-00-PI-330B	I-32	Pressure Gauge	Primary Influent Self-Cleaning Strainer Discharge Pressure Gauge	NA	Primary Influent Self-Cleaning Strainer Package	Unclassified	NA		NA	NA	TBD	NA	I-301		
P-00-PI-330C	I-32	Pressure Gauge	Primary Influent Self-Cleaning Strainer Drain Discharge Pressure Gauge	NA	Primary Influent Self-Cleaning Strainer Package	Unclassified	NA		NA	NA	TBD	NA	I-301		
P-00-FE-361	I-33	Electromagnetic Flow Meter	BNR Feed Pump Discharge Flow Element	NA	BNR Feed Pump Discharge Header	Unclassified	NA		NA	NA		NA	I-101		
P-00-FIT-361	I-33	Electromagnetic Flow Indicating Transmitter	BNR Feed Pump Discharge Flow Indicating Transmitter	AI	BNR Feed Pump Discharge Header	Unclassified	24VDC	24VDC	NA	NA		NA	I-101		
P-00-LIT-340	I-33	Level Indicating Transmitter	Blending Tank Level Indicating Transmitter	AI	Blending Tank	Unclassified	4-20mA HART		NA	NA			I-202		
P-00-LSHH-340	I-33	Float Level Switch High-High	Blending Tank Level Switch High-High	DI	Blending Tank	Unclassified	120VAC		NA	NA	NA		I-151		
P-00-PI-350	I-33	Pressure Gauge	Blend Tank Mixing Pump Discharge Pressure Gauge	NA	Blend Tank Mixing Pump Discharge Header	Unclassified	NA		NA	NA	TBD	NA	I-301		
P-00-PI-360A	I-33	Pressure Gauge	BNR Feed Pump Inlet Line Pressure Gauge	NA	BNR Feed Pump Inlet Line Header	Unclassified	NA		NA	NA	TBD	NA	I-301		
P-00-PI-360B	I-33	Pressure Gauge	BNR Feed Pump Discharge Pressure Gauge	NA	BNR Feed Pump Discharge Header	Unclassified	NA		NA	NA	TBD	NA	I-301		
P-00-PSH-360	I-33	Pressure Switch High	BNR Feed Pump Discharge Pressure Switch High	DI	BNR Feed Pump Discharge Header	Unclassified	120VAC		NA	NA	NA	TBD	I-301		
P-00-TSH-350	I-33	Temperature Switch High	Blending Tank Mixing Pump Temperature Switch High	DI	BNR Feed Pump	Unclassified	120VAC		NA	NA	NA	TBD	I-401		
P-00-TSH-360	I-33	Temperature Switch High	BNR Feed Pump Temperature Switch High	DI	BNR Feed Pump	Unclassified	120VAC		NA	NA	NA	TBD	I-401		
P-00-FSL-370A	I-34	Flow Switch Low	Self- Cleaning Strainer No 1 Discharge Flow Switch Low	DI	Pretreatment Self-Cleaning Strainer Package	Unclassified	24VDC	24VDC	NA	NA	NA	TBD	I-152		
P-00-FSL-370B	I-34	Flow Switch Low	Self- Cleaning Strainer No 1 Drain Flow Switch Low	DI	Pretreatment Self-Cleaning Strainer Package	Unclassified	24VDC	24VDC	NA	NA	NA	TBD	I-152		
P-00-FSL-380A	I-34	Flow Switch Low	Self- Cleaning Strainer No 2 Discharge Flow Switch Low	DI	Pretreatment Self-Cleaning Strainer Package	Unclassified	24VDC	24VDC	NA	NA	NA	TBD	I-152		
P-00-FSL-380B	I-34	Flow Switch Low	Self- Cleaning Strainer No 2 Drain Flow Switch Low	DI	Pretreatment Self-Cleaning Strainer Package	Unclassified	24VDC		NA	NA	NA	TBD	I-152		
P-00-PDSH-370	I-34	Differential Pressure Switch High	Self- Cleaning Strainer No 1 Differential Pressure Switch High	DI	Pretreatment Self-Cleaning Strainer Package	Unclassified	120VAC		NA	NA					
P-00-PDSH-380	I-34	Differential Pressure Switch High	Self- Cleaning Strainer No 2 Differential Pressure Switch High	DI	Pretreatment Self-Cleaning Strainer Package	Unclassified	120VAC		NA	NA					
P-00-PI-370A	I-34	Pressure Gauge	Self- Cleaning Strainer No 1 Inlet Line Pressure Gauge	NA	Pretreatment Self-Cleaning Strainer Package	Unclassified	NA		NA	NA	TBD	NA	I-301		
P-00-PI-370B	I-34	Pressure Gauge	Self- Cleaning Strainer No 1 Discharge Pressure Gauge	NA	Pretreatment Self-Cleaning Strainer Package	Unclassified	NA		NA	NA	TBD	NA	I-301		
P-00-PI-370C	I-34	Pressure Gauge	Self- Cleaning Strainer No 1 Drain Discharge Pressure Gauge	NA	Pretreatment Self-Cleaning Strainer Package	Unclassified	NA		NA	NA	TBD	NA	I-301		
P-00-PI-380A	I-34	Pressure Gauge	Self- Cleaning Strainer No 2 Inlet Line Pressure Gauge	NA	Pretreatment Self-Cleaning Strainer Package	Unclassified	NA		NA	NA	TBD	NA	I-301		
P-00-PI-380B	I-34	Pressure Gauge	Self- Cleaning Strainer No 2 Discharge Pressure Gauge	NA	Pretreatment Self-Cleaning Strainer Package	Unclassified	NA		NA	NA	TBD	NA	I-301		
P-00-PI-380C	I-34	Pressure Gauge	Self- Cleaning Strainer No 2 Drain Discharge Pressure Gauge	NA	Pretreatment Self-Cleaning Strainer Package	Unclassified	NA		NA	NA	TBD	NA	I-301		
P-00-AE-403	I-41	Nitrite Analyzer Element	Anoxic Zone 1 NO3 Analyzer Element	AI	BNR Vendor Package	Unclassified	NA		NA	NA			I-501		
P-00-AE-404	I-41	Dissolved Oxygen Analyzer Element	Anoxic Zone 1 DO Analyzer Element	AI	BNR Vendor Package	Unclassified	NA		NA	NA	0 - 10 mg/L	NA	I-501		
P-00-AE-405	I-41	Total Suspended Solids Analyzer Element	Anoxic Zone 2 TSS Analyzer Element	AI	BNR Vendor Package	Unclassified	NA		NA	NA	0 - 20,000 mg/L	NA	I-501		
P-00-AE-406	I-41	Dissolved Oxygen Analyzer Element	Anoxic Zone 2 DO Analyzer Element	AI	BNR Vendor Package	Unclassified	NA		NA	NA	0 - 10 mg/L	NA	I-501		
P-00-AE-407	I-41	Nitrite Analyzer Element	Anoxic Zone 2 NO3 Analyzer Element	AI	BNR Vendor Package	Unclassified	NA		NA	NA			I-501		
P-00-AE-408	I-41	PH/Temperature Analyzer Element	Anoxic Zone 2 PH/Temp Analyzer Element	AI	BNR Vendor Package	Unclassified	NA		NA	NA			I-501		
P-00-AE-410	I-41	Ammonia Analyzer Element	Anoxic Zone 2 NH3 Analyzer Element	AI	BNR Vendor Package	Unclassified	NA		NA	NA			I-501		
P-00-AIT-403	I-41	Nitrite Analyzer Indicating Transmitter	Anoxic Zone 1 NO3 Analyzer Indicating Transmitter	AI	BNR Vendor Package	Unclassified	24VDC	24VDC	Yes	Yes	TBD	NA	I-501		
P-00-AIT-404	I-41	Dissolved Oxygen Analyzer Indicating Transmitter	Anoxic Zone 1 DO Analyzer Indicating Transmitter	AI	BNR Vendor Package	Unclassified	24VDC	24VDC	Yes	Yes			I-501		
P-00-AIT-405	I-41	Total Suspended Solids Analyzer Indicating Transmitter	Anoxic Zone 2 TSS Analyzer Indicating Transmitter	AI	BNR Vendor Package	Unclassified	24VDC	24VDC	Yes	Yes	0 - 20,000 mg/L	NA	I-501		
P-00-AIT-406	I-41	Dissolved Oxygen Analyzer Indicating Transmitter	Anoxic Zone 2 DO Analyzer Indicating Transmitter	AI	BNR Vendor Package	Unclassified	24VDC	24VDC	Yes	Yes			I-501		
P-00-AIT-407	I-41	Nitrite Analyzer Indicating Transmitter	Anoxic Zone 2 NO3 Analyzer Indicating Transmitter	AI	BNR Vendor Package	Unclassified	24VDC	24VDC	Yes	Yes	TBD	NA	I-501		
P-00-AIT-408	I-41	PH/Temperature Analyzer Indicating Transmitter	Anoxic Zone 2 PH/Temp Analyzer Indicating Transmitter	AI	BNR Vendor Package	Unclassified	24VDC	24VDC	Yes	Yes			I-501		
P-00-AIT-410	I-41	Ammonia Analyzer Indicating Transmitter	Anoxic Zone 2 NH3 Analyzer Indicating Transmitter	AI	BNR Vendor Package	Unclassified	24VDC	24VDC	Yes	Yes			I-501		
P-00-FE-423	I-41	Electromagnetic Flow Meter	WAS Box Discharge Flow Element	NA	BNR Vendor Package	Unclassified	NA		NA	NA		NA	I-101		
P-00-FIT-423	I-41	Electromagnetic Flow Indicating Transmitter	WAS Box Flow Indicating Transmitter	AI	BNR Vendor Package	Unclassified	4-20mA HART	24VDC	NA	NA		NA	I-101		
P-00-LE-409	I-41	Ultrasonic Type Level Element	Anoxic Zone 2 Level Element	NA	BNR Vendor Package	Unclassified	NA	120VAC	NA	NA	0-30 ft	NA	I-201		
P-00-LIT-409	I-41	Level Indicating Transmitter	Anoxic Zone 2 Level Indicating Transmitter	AI	BNR Vendor Package	Unclassified	4-20mA HART	24VDC	NA	NA			I-201		
P-00-LSHH-421	I-41	Float Level Switch High-High	WAS Box Level Switch High-High	DI	BNR Vendor Package	Unclassified	120VAC	120VAC	NA	NA	NA		I-151		
P-00-TSH-400	I-41	Temperature Switch High	Deox Tank Mixer Temperature Switch High	DI	BNR Vendor Package	Unclassified	120VAC		NA	NA	NA	NA	I-401		
P-00-TSH-401	I-41	Temperature Switch High	Anoxic Zone 1 Mixer Temperature Switch High	DI	BNR Vendor Package	Unclassified	120VAC		NA	NA	NA	NA	I-401		
P-00-TSH-402	I-41	Temperature Switch High	Anoxic Zone 2 Mixer Temperature Switch High	DI	BNR Vendor Package	Unclassified	120VAC		NA	NA	NA	NA	I-401		
P-00-FE-431	I-42	Electromagnetic Flow Meter	ML Pump Discharge Flow Element	NA	ML Pump Discharge Header	Unclassified	NA		NA	NA		NA	I-101		
P-00-FE-441	I-42	Electromagnetic Flow Meter	IMLR Pump Discharge Flow Element	NA	IMLR Pump Discharge Header	Unclassified	NA		NA	NA		NA	I-101		
P-00-FIT-431	I-42	Electromagnetic Flow Indicating Transmitter	ML Pump Flow Indicating Transmitter	AI	ML Pump Discharge Header	Unclassified	4-20mA HART	24VDC	NA	NA		NA	I-101		
P-00-FIT-441	I-42	Electromagnetic Flow Indicating Transmitter	IMLR Pump Flow Indicating Transmitter	AI	IMLR Pump Discharge Header	Unclassified	4-20mA HART	24VDC	NA	NA		NA	I-101		
P-00-FSL-440	I-42	Flow Switch Low	IMLR Pump Discharge Flow Switch Low	DI	IMLR Pump Discharge Header	Unclassified	24VDC	24VDC	NA	NA	NA	TBD	I-152		
P-00-PI-430	I-42	Pressure Gauge	ML Pump Discharge Pressure Gauge	NA	ML Pump Discharge Header	Unclassified	NA		NA	NA	TBD	NA	I-301		
P-00-PI-440	I-42	Pressure Gauge	IMLR Pump Discharge Pressure Gauge	NA	IMLR Pump Discharge Header	Unclassified	NA		NA	NA	TBD	NA	I-301		
P-00-PSH-430	I-42	Pressure Switch High	ML Pump Discharge Pressure Switch High	DI	ML Pump Discharge Header	Unclassified	120VAC		NA	NA	NA	TBD	I-301		
P-00-PSH-440	I-42	Pressure Switch High	IMLR Pump Discharge Pressure Switch High	DI	IMLR Pump Discharge Header	Unclassified	120VAC		NA	NA	NA	TBD	I-301		
P-00-TSH-430	I-42	Temperature Switch High	ML Pump Temperature Switch High	DI	ML Pump	Unclassified	120VAC		NA	NA	NA	NA	I-401		
P-00-TSH-440	I-42	Temperature Switch High	IMLR Pump Temperature Switch High	DI	IMLR Pump	Unclassified	120VAC		NA	NA	NA	NA	I-401		
P-00-DPI-450	I-43	Differential Pressure Indicator	Aeration Blower No 1 Inlet Differential Pressure Indicator	NA	Aeration Blowers No 1 Vendor Skid	Unclassified	NA		NA	NA			I-302		
P-00-DPI-460	I-43	Differential Pressure Indicator	Aeration Blower No 2 Inlet Differential Pressure Indicator	NA	Aeration Blowers No 2 Vendor Skid	Unclassified	NA		NA	NA			I-302		
P-00-PI-450	I-43	Pressure Gauge	Aeration Blower No 1 Discharge Pressure Gauge	NA	Aeration Blowers No 1 Vendor Skid	Unclassified	NA		NA	NA	TBD	NA	I-301		
P-00-PI-460	I-43	Pressure Gauge	Aeration Blower No 2 Discharge Pressure Gauge	NA	Aeration Blowers No 2 Vendor Skid	Unclassified	NA		NA	NA	TBD	NA	I-301		
P-00-PIT-450A	I-43	Pressure Indicating Transmitter	Aeration Blower No 1 Inlet Pressure Indicating Transmitter	AI	Aeration Blowers No 1 Vendor Skid	Unclassified	4-20mA HART		NA	NA	0 - 15 psig [VTC]	NA	I-303		

Instrument Tag	Drawing Number	Instrument Type	Service Description	IO Type	Location	Area Classification	Signal Detail	Req. Power Supply	LSA Req	Sunshield Req	Calibrated Range	Instrument Setpoint	Installation Detail Ref.	Comments	Revision
P-00-PIT-450B	I-43	Pressure Indicating Transmitter	Aeration Blower No 1 Discharge Pressure Indicating Transmitter	AI	Process Aeration Blowers	Unclassified	4-20mA HART		NA	NA	0 - 15 psig [VTC]	NA	I-303		
P-00-PIT-460	I-43	Pressure Indicating Transmitter	Aeration Blower No 2 Inlet Pressure Indicating Transmitter	AI	Aeration Blowers No 2 Vendor Skid	Unclassified	4-20mA HART		NA	NA	0 - 15 psig [VTC]	NA	I-303		
P-00-PSH-450	I-43	Pressure Switch High	Aeration Blower No 1 Discharge Pressure Switch High	DI	Aeration Blowers No 1 Vendor Skid	Unclassified	120VAC		NA	NA	NA	TBD	I-301		
P-00-PSH-460	I-43	Pressure Switch High	Aeration Blower No 2 Discharge Pressure Switch High	DI	Aeration Blowers No 2 Vendor Skid	Unclassified	120VAC		NA	NA	NA	TBD	I-301		
P-00-TI-450	I-43	Temperature Indicator	Aeration Blower No 1 Discharge Temperature Indicator	NA	Aeration Blowers No 1 Vendor Skid	Unclassified	NA		NA	NA		NA	TBD		
P-00-TI-460	I-43	Temperature Indicator	Aeration Blower No 2 Discharge Temperature Indicator	NA	Aeration Blowers No 2 Vendor Skid	Unclassified	NA		NA	NA		NA	TBD		
P-00-TSH-450A	I-43	Temperature Switch High	Aeration Blower No 1 Motor Temperature Switch High	DI	Aeration Blowers No 1 Vendor Skid	Unclassified	120VAC		NA	NA	NA	NA	I-401		
P-00-TSH-450B	I-43	Temperature Switch High	Aeration Blower No 1 Discharge Temperature Switch High	DI	Aeration Blowers No 1 Vendor Skid	Unclassified	120VAC		NA	NA	NA	NA	I-401		
P-00-TSH-460A	I-43	Temperature Switch High	Aeration Blower No 2 Motor Temperature Switch High	DI	Aeration Blowers No 2 Vendor Skid	Unclassified	120VAC		NA	NA	NA	NA	I-401		
P-00-TSH-460B	I-43	Temperature Switch High	Aeration Blower No 2 Discharge Temperature Switch High	DI	Aeration Blowers No 2 Vendor Skid	Unclassified	120VAC		NA	NA	NA	NA	I-401		
P-00-FE-461	I-44	Thermal Mass Flow Element	Aerobic Tank Zone 1 Flow Element	NA	Process Aeration Control	Unclassified	NA		NA	NA		NA	I-102		
P-00-FE-462	I-44	Thermal Mass Flow Element	Aerobic Tank Zone 2 Flow Element	NA	Process Aeration Control	Unclassified	NA		NA	NA		NA	I-102		
P-00-FIT-461	I-44	Thermal Mass Flow Indicating Transmitter	Aerobic Tank Zone 1 Flow Indicating Transmitter	AI	Process Aeration Control	Unclassified	4-20mA HART	24VDC	NA	NA		NA	I-102		
P-00-FIT-462	I-44	Thermal Mass Flow Indicating Transmitter	Aerobic Tank Zone 2 Flow Indicating Transmitter	AI	Process Aeration Control	Unclassified	4-20mA HART	24VDC	NA	NA		NA	I-102		
P-00-LIT-506	I-51	Level Indicating Transmitter	MBR System Membrane Basin Level Indicating Transmitter	AI	MBR System Skid	Unclassified	4-20mA HART	24VDC	NA	NA			I-202		
P-00-LSH-505	I-51	Float Level Switch High	MBR System Membrane Basin Level Switch High	NA	MBR System Skid	Unclassified	120VAC	24VDC	NA	NA	NA		I-151		
P-00-PIT-507	I-51	Pressure Indicating Transmitter	MBR System Membrane Basin Discharge Pressure Indicating Transmitter	AI	MBR System	Unclassified	4-20mA HART		NA	NA	0 - 15 psig [VTC]	NA	I-303		
P-00-FE-511	I-52	Electromagnetic Flow Meter	MBR System Filtrate/ Backwash Pump Discharge Flow Element	NA	MBR System Filtrate/ Backwash Pump Discharge Header	Unclassified	NA		NA	NA		NA	I-101		
P-00-FE-521	I-52	Electromagnetic Flow Meter	RAS Pump Discharge Flow Element	NA	RAS Pump Discharge Header	Unclassified	NA		NA	NA		NA	I-101		
P-00-FE-522	I-52	Electromagnetic Flow Meter	RAS Pump Discharge To Strainers Flow Element	NA	RAS Pump Discharge Header	Unclassified	NA		NA	NA		NA	I-101		
P-00-FIT-511	I-52	Electromagnetic Flow Indicating Transmitter	MBR System Filtrate/ Backwash Pump Discharge Flow Indicating Transmitter	AI	MBR System Filtrate/ Backwash Pump Discharge Header	Unclassified	4-20mA HART	24VDC	NA	NA		NA	I-101		
P-00-FIT-521	I-52	Electromagnetic Flow Indicating Transmitter	RAS Pump Discharge Flow Indicating Transmitter	AI	RAS Pump Discharge Header	Unclassified	4-20mA HART	24VDC	NA	NA		NA	I-101		
P-00-FIT-522	I-52	Electromagnetic Flow Indicating Transmitter	RAS Pump Discharge To Strainers Flow Indicating Transmitter	AI	RAS Pump Discharge Header	Unclassified	4-20mA HART	24VDC	NA	NA		NA	I-101		
P-00-FSL-520	I-52	Flow Switch Low	RAS Pump Discharge Flow Switch Low	DI	RAS Pump Discharge Header	Unclassified	24VDC		NA	NA	NA	TBD	I-152		
P-00-PI-510	I-52	Pressure Gauge	MBR System Filtrate/ Backwash Pump Discharge Pressure Gauge	NA	MBR System Filtrate/ Backwash Pump Discharge Header	Unclassified	NA		NA	NA	TBD	NA	I-301		
P-00-PI-520	I-52	Pressure Gauge	RAS Pump Discharge Pressure Gauge	NA	RAS Pump Discharge Header	Unclassified	NA		NA	NA	TBD	NA	I-301		
P-00-PIT-510A	I-52	Pressure Indicating Transmitter	MBR System Filtrate/ Backwash Pump Suction Pressure Indicating Transmitter	AI	MBR System Filtrate/ Backwash Pump Inlet Line	Unclassified	NA		NA	NA	0 - 15 psig [VTC]	NA	I-303		
P-00-PIT-510B	I-52	Pressure Indicating Transmitter	MBR System Filtrate/ Backwash Pump Discharge Pressure Indicating Transmitter	AI	MBR System Filtrate/ Backwash Pump Discharge Header	Unclassified	NA		NA	NA	0 - 15 psig [VTC]	NA	I-303		
P-00-TE-512	I-52	Temperature Element	MBR System Filtrate/ Backwash Pump Discharge Temperature Element	AI	MBR System Filtrate/ Backwash Pump Discharge Header	Unclassified	NA		NA	NA		NA	I-401		
P-00-TIT-512	I-52	Temperature Indicating Transmitter	MBR System Filtrate/ Backwash Pump Discharge Temperature Indicating Transmitter	AI	MBR System Filtrate/ Backwash Pump Discharge Header	Unclassified	NA		NA	NA			I-401		
P-00-TSH-510	I-52	Temperature Switch High	MBR System Filtrate/ Backwash Pump Motor Temperature Switch High	DI	MBR System Filtrate/ Backwash Pump Motor	Unclassified	120VAC		NA	NA	NA	NA	I-401		
P-00-TSH-520	I-52	Temperature Switch High	RAS Pump Motor Temperature Switch High	DI	RAS Pump Motor	Unclassified	120VAC		NA	NA	NA	NA	I-401		
P-00-FE-530	I-53	Thermal Mass Flow Element	MBR Air Scour Blower Discharge Flow Element	NA	MBR System Air Scour	Unclassified	NA		NA	NA	TBD	NA	I-102		
P-00-FIT-530	I-53	Thermal Mass Flow Indicating Transmitter	MBR Air Scour Blower Discharge Flow Indicating Transmitter	AI	MBR System Air Scour	Unclassified	4-20mA HART	24VDC	NA	NA		NA	I-102		
P-00-PDI-530	I-53	Differential Pressure Indicator	MBR Air Scour Blower Discharge Differential Pressure Indicator	NA	MBR Air Scour Blower Vendor Skid	Unclassified	NA		NA	NA					
P-00-PI-530	I-53	Pressure Gauge	MBR Air Scour Blower Discharge Pressure Gauge	NA	MBR Air Scour Blower Vendor Skid	Unclassified	NA		NA	NA	TBD	NA	I-301		
P-00-PIT-530	I-53	Pressure Indicating Transmitter	MBR Air Scour Blower Discharge Pressure Indicating Transmitter	AI	MBR System Air Scour	Unclassified	4-20mA HART		NA	NA	0 - 15 psig [VTC]	NA	I-303		
P-00-TI-530	I-53	Temperature Indicator	MBR Air Scour Blower Discharge Temperature Indicator	NA	MBR Air Scour Blower Vendor Skid	Unclassified	NA		NA	NA		NA	TBD		
P-00-TSH-530	I-53	Temperature Switch High	MBR Air Scour Blower Motor Temperature Switch High	DI	MBR Air Scour Blower Vendor Skid	Unclassified	120VAC		NA	NA	NA	NA	I-401		
P-00-AE-541	I-54	Ammonia Analyzer Element	MBR System Filtrate NH3 Analyzer Element	AI	MBR System Filtrate Analyzer Panel	Unclassified	NA		NA	NA			I-501		
P-00-AE-542	I-54	Nitrite/Nitrogen Dioxide Analyzer Element	MBR System Filtrate NO3/NO2 Analyzer Element	AI	MBR System Filtrate Analyzer Panel	Unclassified	NA		NA	NA			I-501		
P-00-AE-543	I-54	Turbidity Analyzer Element	MBR System Filtrate TURB Analyzer Element	AI	MBR System Filtrate Analyzer Panel	Unclassified	NA		NA	NA			I-501		
P-00-AIT-541	I-54	Ammonia Analyzer Indicating Transmitter	MBR System Filtrate NH3 Analyzer Indicating Transmitter	AI	MBR System Filtrate Analyzer Panel	Unclassified	24VDC		Yes	Yes			I-501		
P-00-AIT-542	I-54	Nitrite/Nitrogen Dioxide Analyzer Indicating Transmitter	MBR System Filtrate NO3/NO2 Analyzer Indicating Transmitter	AI	MBR System Filtrate Analyzer Panel	Unclassified	24VDC	24VDC	Yes	Yes			I-501		
P-00-AIT-543	I-54	Turbidity Analyzer Indicating Transmitter	MBR System Filtrate TURB Analyzer Indicating Transmitter	AI	MBR System Filtrate Analyzer Panel	Unclassified	24VDC	24VDC	Yes	Yes			I-501		
p-00-FI-541	I-54	Flow Indicator	MBR System Filtrate NH3 Analyzer Inlet Flow Indicator	NA	MBR System Filtrate Analyzer Panel	Unclassified	NA		NA	NA	TBD	NA	I-106		
p-00-FI-542	I-54	Flow Indicator	MBR System Filtrate NO3/NO2 Analyzer Flow Indicator	NA	MBR System Filtrate Analyzer Panel	Unclassified	NA		NA	NA	TBD	NA	I-106		
p-00-FI-543	I-54	Flow Indicator	MBR System Filtrate TURB Analyzer Inlet Flow Indiactor	NA	MBR System Filtrate Analyzer Panel	Unclassified	NA		NA	NA	TBD	NA	I-106		
P-00-FSL-540	I-54	Flow Switch Low	MBR System Filtrate Analyzer Panel Inlet Flow Switch Low	DI	MBR System Filtrate Analyzer Panel	Unclassified	24VDC	24VDC	NA	NA	NA	TBD	I-152		
P-00-PI-540	I-54	Pressure Gauge	MBR System Filtrate Analyzer Panle Inlet Pressure Gauge	NA	MBR System Filtrate Analyzer Panel	Unclassified	NA		NA	NA	TBD	NA	I-301		
P-00-LIT-550	I-55	Level Indicating Transmitter	MBR Filtrate Tank No 1 Level Indicating Transmitter	AI	MBR Filtrate Tank No 1	Unclassified	4-20mA HART		NA	NA			I-202		
P-00-LIT-560	I-55	Level Indicating Transmitter	MBR Filtrate Tank No 2 Level Indicating Transmitter	AI	MBR Filtrate Tank No 2	Unclassified	4-20mA HART		NA	NA			I-202		
P-00-FE-571	I-56	Electromagnetic Flow Meter	PWF Feed Pump Discharge Flow Element	NA	PWF Feed Pump Discharge Header	Unclassified	NA		NA	NA		NA	I-101		
P-00-FIT-571	I-56	Electromagnetic Flow Indicating Transmitter	PWF Feed Pump Discharge Flow Indicating Transmitter	AI	PWF Feed Pump Discharge Header	Unclassified	4-20mA HART	24VDC	NA	NA		NA	I-101		
P-00-FSL-570	I-56	Flow Switch Low	PWF Feed Pump Discharge Flow Switch Low	DI	PWF Feed Pump Discharge Header	Unclassified	24VDC	24VDC	NA	NA	NA	TBD	I-152		
P-00-PI-570A	I-56	Pressure Gauge	PWF Feed Pump Discharge Pressure Gauge No 1	NA	PWF Feed Pump Discharge Header	Unclassified	NA		NA	NA	TBD	NA	I-301		
P-00-PI-570B	I-56	Pressure Gauge	PWF Feed Pump Discharge Pressure Gauge No 2	NA	PWF Feed Pump Discharge Header	Unclassified	NA		NA	NA	TBD	NA	I-301		
P-00-PI-570C	I-56	Pressure Gauge	PWF Feed Pump Discharge Pressure Gauge No 3	NA	PWF Feed Pump Discharge Header	Unclassified	NA		NA	NA	TBD	NA	I-301		
P-00-PI-570D	I-56	Pressure Gauge	PWF Feed Pump Discharge Pressure Gauge No 4	NA	PWF Feed Pump Discharge Header	Unclassified	NA		NA	NA	TBD	NA	I-301		
P-00-PI-570E	I-56	Pressure Gauge	PWF Feed Pump Discharge Pressure Gauge No 5	NA	PWF Feed Pump Discharge Header	Unclassified	NA		NA	NA	TBD	NA	I-301		
P-00-TSH-570	I-56	Temperature Switch High	PWF Feed Pump Motor Temperature Switch High	DI	PWF Feed Pump Motor	Unclassified	120VAC		NA	NA	NA	NA	I-401		
P-00-FE-631	I-61	Electromagnetic Flow Meter	Pathogen Pump No 1 Discharge Flow Element	NA	Pathogen Testing Panel No 1	Unclassified	NA		NA	NA		NA	I-101		
P-00-FE-641	I-61	Electromagnetic Flow Meter	Pathogen Pump No 2 Discharge Flow Element	NA	Pathogen Testing Panel No 2	Unclassified	NA		NA	NA		NA	I-101		
P-00-FIT-631	I-61	Electromagnetic Flow Indicating Transmitter	Pathogen Pump No 1 Discharge Flow Indicating Transmitter	AI	Pathogen Testing Panel No 1	Unclassified	4-20mA HART	24VDC	NA	NA		NA	I-101		
P-00-FIT-641	I-61	Electromagnetic Flow Indicating Transmitter	Pathogen Pump No 2 Discharge Flow Indicating Transmitter	AI	Pathogen Testing Panel No 2	Unclassified	4-20mA HART	24VDC	NA	NA		NA	I-101		
P-00-LIT-610	I-61	Level Indicating Transmitter	Pathogen Test Tank No 1 Level Indicating Transmitter	AI	Pathogen Test Tank No 1	Unclassified	4-20mA HART		NA	NA			I-202		
P-00-LIT-620	I-61	Level Indicating Transmitter	Pathogen Test Tank No 2 Level Indicating Transmitter	AI	Pathogen Test Tank No 2	Unclassified	4-20mA HART		NA	NA			I-202		
P-00-PI-630	I-61	Pressure Gauge	Pathogen Pump No 1 Discharge Pressure Gauge	NA	Pathogen Testing Panel No 1	Unclassified	NA		NA	NA	TBD	NA	I-301		

Instrument Tag	Drawing Number	Instrument Type	Service Description	IO Type	Location	Area Classification	Signal Detail	Req. Power Supply	LSA Req	Sunshield Req	Calibrated Range	Instrument Setpoint	Installation Detail Ref.	Comments	Revision
P-00-PI-640	I-61	Pressure Gauge	Pathogen Pump No 2 Discharge Pressure Gauge	NA	Pathogen Testing Panel No 2	Unclassified	NA		NA	NA	TBD	NA	I-301		
P-00-PSH-630	I-61	Pressure Switch High	Pathogen Pump No 1 Pressure Switch High	DI	Pathogen Testing Panel No 1	Unclassified	120VAC		NA	NA	NA	TBD	I-301		
P-00-PSH-640	I-61	Pressure Switch High	Pathogen Pump No 2 Pressure Switch High	DI	Pathogen Testing Panel No 2	Unclassified	120VAC		NA	NA	NA	TBD	I-301		
P-00-FE-704	I-71	Electromagnetic Flow Meter	Ozone Direct Injection Pump Discharge Flow Element	NA	Ozone Injection System	Unclassified	NA		NA	NA		NA	I-101		
P-00-FE-705	I-71	Electromagnetic Flow Meter	Ozone Fine Bubble Diffuser Feed Flow Element No 1	NA	Ozone Fine Bubble Diffuser System	Unclassified	NA		NA	NA		NA	I-101		
P-00-FE-706	I-71	Electromagnetic Flow Meter	Ozone Fine Bubble Diffuser Feed Flow Element No 2	NA	Ozone Fine Bubble Diffuser System	Unclassified	NA		NA	NA		NA	I-101		
P-00-FI-713	I-71	Flow Indicator	Ozone Diffuser Flow Indicator No 1	NA	Ozone Injection System	Unclassified	NA		NA	NA	TBD	NA	I-106		
P-00-FI-714	I-71	Flow Indicator	Ozone Diffuser Flow Indicator No 2	NA	Ozone Injection System	Unclassified	NA		NA	NA	TBD	NA	I-106		
P-00-FIT-704	I-71	Electromagnetic Flow Indicating Transmitter	Ozone Direct Injection Discharge Flow Indicating Transmitter	AI	Ozone Injection System	Unclassified	4-20mA HART		NA	NA		NA	I-101		
P-00-FIT-705	I-71	Electromagnetic Flow Indicating Transmitter	Ozone Fine Bubble Diffuser Feed Flow Indicating Transmitter No 1	AI	Ozone Fine Bubble Diffuser System	Unclassified	4-20mA HART		NA	NA		NA	I-101		
P-00-FIT-706	I-71	Electromagnetic Flow Indicating Transmitter	Ozone Fine Bubble Diffuser Feed Flow Indicating Transmitter No 2	AI	Ozone Fine Bubble Diffuser System	Unclassified	4-20mA HART		NA	NA		NA	I-101		
P-00-LE-708	I-71	Level Antenna	Ozone Diffuser Level Element No 1	NA	Ozone Fine Bubble Diffuser System	Unclassified	NA		NA	NA	0-30 ft	NA	I-202		
P-00-LE-709	I-71	Level Antenna	Ozone Diffuser Level Element No 2	NA	Ozone Fine Bubble Diffuser System	Unclassified	NA		NA	NA	0-30 ft	NA	I-202		
P-00-LIT-708	I-71	Level Indicating Transmitter	Ozone Diffuser Level Indicating Transmitter No 1	AI	Ozone Fine Bubble Diffuser System	Unclassified	4-20mA HART		NA	NA			I-202		
P-00-LIT-709	I-71	Level Indicating Transmitter	Ozone Diffuser Level Indicating Transmitter No 2	AI	Ozone Fine Bubble Diffuser System	Unclassified	4-20mA HART		NA	NA			I-202		
P-00-LSH-710	I-71	Float Level Switch High	Ozone Liquid Separator Float Level Switch High	AI	Ozone Injection System	Unclassified	4-20mA HART		NA	NA	NA		I-151		
P-00-LSHH-708	I-71	Float Level Switch High-High	Ozone Diffuser Level Switch High-High No 1	DI	Ozone Injection System	Unclassified	120VAC		NA	NA	NA		I-151		
P-00-LSHH-709	I-71	Float Level Switch High-High	Ozone Diffuser Level Switch High-High No 2	DI	Ozone Injection System	Unclassified	120VAC		NA	NA	NA		I-151		
P-00-PI-707	I-71	Pressure Gauge	Ozone Direct Injection Discharge Pressure Gauge No 1	NA	Ozone Injection System	Unclassified	NA		NA	NA	TBD	NA	I-301		
P-00-PI-710	I-71	Pressure Gauge	Ozone Liquid Separator Inlet Line Pressure Gauge	NA	Ozone Dissolution System (Murray)	Unclassified	NA		NA	NA	TBD	NA	I-301		
P-00-PI-716	I-71	Pressure Gauge	Ozone Direct Injection Discharge Pressure Gauge No 2	NA	Ozone Dissolution System (Murray)	Unclassified	NA		NA	NA	TBD	NA	I-301		
P-00-PIT-700	I-71	Pressure Indicating Transmitter	Ozone Direct Injection Pump Discharge Pressure Indicating Transmitter No 1	AI	Ozone Injection System	Unclassified	NA		NA	NA	0 - 15 psig [VTC]	NA	I-303		
P-00-PIT-707	I-71	Pressure Indicating Transmitter	Ozone Direct Injection Pump Discharge Pressure Indicating Transmitter No 2	AI	Ozone Injection System	Unclassified	NA		NA	NA	0 - 15 psig [VTC]	NA	I-303		
P-00-FSL-725	I-72	Flow Switch Low	Chiller Assembly Flow Switch Low	DI	Chiller Assembly	Unclassified	24VDC		NA	NA	NA	TBD	I-152		
P-00-TE-725	I-72	Temperature Element	Chiller Assembly Evaporator Discharge Temperature Element	AI	Chiller Assembly	Unclassified	NA		NA	NA		NA	I-401		
P-00-TIT-725	I-72	Temperature Indicating Transmitter	Chiller Assembly Evaporator Discharge Temperature Indicating Transmitter	AI	Chiller Assembly	Unclassified	NA		NA	NA			I-401		
P-00-AE-741	I-73	Dissolved Ozone Analyzer Element	Ozonated MBR Filtrate DO3 Analyzer Element No 1	AI	Ozone Contactor Analyzer Panel No 1	Unclassified	NA		NA	NA	0 - 10 mg/L	NA	I-501		
P-00-AE-744	I-73	Dissolved Ozone/Temperature Analyzer Element	Ozonated MBR Filtrate DO3/Temp Analyzer Element No 2	AI	Ozone Contactor Analyzer Panel No 2	Unclassified	NA		NA	NA			I-501		
P-00-AE-745	I-73	Dissolved Ozone Analyzer Element	Ozonated MBR Filtrate DO3 Analyzer Element No 3	AI	Ozone Contactor Analyzer Panel No 3	Unclassified	NA		NA	NA	0 - 10 mg/L	NA	I-501		
P-00-AE-746	I-73	UV Transmittance Analyzer Element	Dosing Pump UVT Analyzer Element No 1	AI	Ozone Product Analyzer Panel	Unclassified	NA		NA	NA			I-501		
P-00-AE-747	I-73	Oxidation-Reduction Potential Analyzer Element	Dosing Pump ORP Analyzer Element No 2	AI	Ozone Product Analyzer Panel	Unclassified	NA		NA	NA	-1000 to 1000 mV	NA	I-501		
P-00-AE-748	I-73	Turbidity Analyzer Element	Dosing Pump TURB Analyzer Element No 3	AI	Ozone Product Analyzer Panel	Unclassified	NA		NA	NA			I-501		
P-00-AIT-741	I-73	Dissolved Ozone Analyzer Indicating Transmitter	Ozonated MBR Filtrate DO3 Analyzer Indicating Transmitter No 1	AI	Ozone Contactor Analyzer Panel No 1	Unclassified	24VDC	24VDC	Yes	Yes			I-501		
P-00-AIT-744	I-73	Dissolved Ozone/Temperature Analyzer Indicating Transmitter	Ozonated MBR Filtrate DO3/Temp Analyzer Indicating Transmitter No 2	AI	Ozone Contactor Analyzer Panel No 2	Unclassified	24VDC	24VDC	Yes	Yes			I-501		
P-00-AIT-745	I-73	Dissolved Ozone Analyzer Indicating Transmitter	Ozonated MBR Filtrate DO3 Analyzer Indicating Transmitter No 3	AI	Ozone Contactor Analyzer Panel No 3	Unclassified	24VDC	24VDC	Yes	Yes			I-501		
P-00-AIT-746	I-73	UV Transmittance Analyzer Indicating Transmitter	Dosing Pump UVT Analyzer Indicating Transmitter No 4	AI	Ozone Product Analyzer Panel	Unclassified	24VDC		Yes	Yes			I-501		
P-00-AIT-747	I-73	Oxidation-Reduction Potential Analyzer Indicating Transmitter	Dosing Pump ORP Analyzer Indicating Transmitter No 5	AI	Ozone Product Analyzer Panel	Unclassified	24VDC	24VDC	Yes	Yes			I-501		
P-00-AIT-748	I-73	Turbidity Analyzer Indicating Transmitter	Dosing Pump TURB Analyzer Indicating Transmitter No 6	AI	Ozone Product Analyzer Panel	Unclassified	24VDC	24VDC	Yes	Yes			I-501		
P-00-FI-735	I-73	Flow Indicator	Ozone Product Analyzer Panel Flow Indicator No 1	NA	Ozone Product Analyzer Panel	Unclassified	NA		NA	NA	TBD	NA	I-106		
P-00-FI-736	I-73	Flow Indicator	Ozone Product Analyzer Panel Flow Indicator No 2	NA	Ozone Product Analyzer Panel	Unclassified	NA		NA	NA	TBD	NA	I-106		
P-00-FI-737	I-73	Flow Indicator	Ozone Product Analyzer Panel Flow Indicator No 3	NA	Ozone Product Analyzer Panel	Unclassified	NA		NA	NA	TBD	NA	I-106		
P-00-FI-741	I-73	Flow Indicator	Ozone Contactor Analyzer Panel No 1 Flow Indicator	NA	Ozone Contactor Analyzer Panel No 1	Unclassified	NA		NA	NA	TBD	NA	I-106		
P-00-FI-744	I-73	Flow Indicator	Ozone Contactor Analyzer Panel No 2 Flow Indicator	NA	Ozone Contactor Analyzer Panel No 2	Unclassified	NA		NA	NA	TBD	NA	I-106		
P-00-FI-745	I-73	Flow Indicator	Ozone Contactor Analyzer Panel No 3 Flow Indicator	NA	Ozone Contactor Analyzer Panel No 3	Unclassified	NA		NA	NA	TBD	NA	I-106		
P-00-FSL-735	I-73	Flow Switch Low	Ozone Product Flow Switch Low	DI	Ozone Product Analyzer Panel	Unclassified	24VDC	24VDC	NA	NA	NA	TBD	I-152		
P-00-FSL-741	I-73	Flow Switch Low	Ozone Contactor Analyzer Panel No 1 Flow Switch Low	DI	Ozone Contactor Analyzer Panel No 1	Unclassified	24VDC	24VDC	NA	NA	NA	TBD	I-152		
P-00-FSL-744	I-73	Flow Switch Low	Ozone Contactor Analyzer Panel No 2 Flow Switch Low	DI	Ozone Contactor Analyzer Panel No 2	Unclassified	24VDC	24VDC	NA	NA	NA	TBD	I-152		
P-00-FSL-745	I-73	Flow Switch Low	Ozone Contactor Analyzer Panel No 3 Flow Switch Low	DI	Ozone Contactor Analyzer Panel No 3	Unclassified	24VDC	24VDC	NA	NA	NA	TBD	I-152		
P-00-PI-735	I-73	Pressure Gauge	Ozone Product Inlet Line Pressure Gauge	NA	Ozone Product Analyzer Panel	Unclassified	NA		NA	NA	TBD	NA	I-301		
P-00-PI-741	I-73	Pressure Gauge	Ozone Contactor Analyzer Panel No 1 Pressure Gauge	NA	Ozone Contactor Analyzer Panel No 1	Unclassified	NA		NA	NA	TBD	NA	I-301		
P-00-PI-744	I-73	Pressure Gauge	Ozone Contactor Analyzer Panel No 2 Pressure Gauge	NA	Ozone Contactor Analyzer Panel No 2	Unclassified	NA		NA	NA	TBD	NA	I-301		
P-00-PI-745	I-73	Pressure Gauge	Ozone Contactor Analyzer Panel No 3 Pressure Gauge	NA	Ozone Contactor Analyzer Panel No 3	Unclassified	NA		NA	NA	TBD	NA	I-301		
P-00-LIT-740	I-74	Level Indicating Transmitter	Ozone Product Tank Level Indicating Transmitter	AI	Ozone Product Tank	Unclassified	4-20mA HART		NA	NA			I-202		
P-00-PI-750	I-74	Pressure Gauge	Ozone Product Pump Discharge Pressure Gauge	NA	BAC Vendor Panel	Unclassified	NA		NA	NA	TBD	NA	I-301		
P-00-PIT-743	I-74	Pressure Indicating Transmitter	Demister Discharge Pressure Indicating Transmitter	AI	Ozone Contactor (Murray)	Unclassified	4-20mA HART		NA	NA	0 - 15 psig [VTC]	NA	I-303		
P-00-TSH-750	I-74	Temperature Switch High	Ozone Product Pump Motor Temperature Switch High	DI	BAC Vendor Panel	Unclassified	120VAC		NA	NA	NA	NA	I-401		
P-00-AE-760	I-76	Ozone Analyzer Element	Destruct Vessel Inlet Line O3 Analyzer Element	AI	Ozone Destruct Skid	Unclassified	NA	24VDC	NA	NA			I-501		
P-00-AE-763	I-76	Ozone Analyzer Element	Destruct Vessel Discharge O3 Analyzer Element	AI	Ozone Destruct Skid	Unclassified	NA	24VDC	NA	NA			I-501		
P-00-AIT-760	I-76	Ozone Analyzer Element	Destruct Vessel Line Inlet O3 Analyzer Indicating Transmitter	AI	Ozone Destruct Skid	Unclassified	24VDC	24VDC	Yes	Yes			I-501		
P-00-AIT-763	I-76	Ozone Analyzer Element	Destruct Vessel Discharge O3 Analyzer Indicating Transmitter	AI	Ozone Destruct Skid	Unclassified	24VDC	24VDC	Yes	Yes			I-501		
P-00-DIP-761	I-76	Differential Pressure Indicator	Destruct Vessel Inlet Line Differential Pressure Indicator	NA	Ozone Destruct Skid	Unclassified	NA		NA	NA			I-302		
P-00-JI-761	I-76	Power Indicater	Destruct Vessel Power Indicater	DI	Ozone Destruct Skid	Unclassified	NA		NA	NA					
P-00-PT-760	I-76	Pressure Transmitter	Destruct Vessel Inlet Line Pressure Transmitter	AI	Ozone Destruct Skid	Unclassified	NA		NA	NA			I-303		
P-00-TE-760	I-76	Temperature Element	Destruct Vessel Inlet Line Temperature Element	NA	Ozone Destruct Skid	Unclassified	NA		NA	NA		NA	I-401		
P-00-TE-761	I-76	Temperature Element (Resistance Temperature Detector)	Destruct Vessel Motor Temperature Element	RTD	Ozone Destruct Skid	Unclassified	NA		NA	NA		NA	I-401		
P-00-TE-762	I-76	Temperature Element	Destruct Vessel Discharge Temperature Element No 1	NA	Ozone Destruct Skid	Unclassified	NA		NA	NA		NA	I-401		
P-00-TE-762A	I-76	Temperature Element	Destruct Vessel Discharge Temperature Element No 2	NA	Ozone Destruct Skid	Unclassified	NA		NA	NA		NA	I-401		
P-00-TI-760	I-76	Temperature Indicator	Destruct Vessel Inlet Line Temperature Indicator	NA	Ozone Destruct Skid	Unclassified	NA		NA	NA		NA	TBD		

Instrument Tag	Drawing Number	Instrument Type	Service Description	IO Type	Location	Area Classification	Signal Detail	Req. Power Supply	LSA Req	Sunshield Req	Calibrated Range	Instrument Setpoint	Installation Detail Ref.	Comments	Revision
P-00-TI-762	I-76	Temperature Indicator	Destruct Vessel Discharge Temperature Indicator	NA	Ozone Destruct Skid	Unclassified	NA		NA	NA		NA	TBD		
P-00-TIC-761	I-76	Temperature Indicator Controller	Destruct Vessel Temperature Indicator Controller	AI	Ozone Destruct Skid	Unclassified	NA		NA	NA					
P-00-TT-761	I-76	Temperature Switch High	Destruct Vessel Inlet Line Discharge Temperature Switch High	DI	Ozone Destruct Skid	Unclassified	120VAC		NA	NA			I-401		
P-00-TT-762	I-76	Temperature Switch High	Destruct Vessel Discharge Temperature Switch High	DI	Ozone Destruct Skid	Unclassified	120VAC		NA	NA			I-401		
P-00-ZSC-760	I-76	Closed Position Switch	Destruct Vessel Closed Position Switch	DI	Ozone Destruct Skid	Unclassified	120VAC	24VDC	NA	NA					
P-00-ZSO-760	I-76	Opened Position Switch	Destruct Vessel Opened Position Switch	DI	Ozone Destruct Skid	Unclassified	120VAC	24VDC	NA	NA					
P-00-FE-804	I-81	Electromagnetic Flow Meter	Filter No 1 Discharge Flow Element	NA	BAC System Skid	Unclassified	NA		NA	NA		NA	I-101		
P-00-FE-814	I-81	Electromagnetic Flow Meter	Filter No 2 Discharge Flow Element	NA	BAC System Skid	Unclassified	NA		NA	NA		NA	I-101		
P-00-FIT-804	I-81	Electromagnetic Flow Indicating Transmitter	Filter No 1 Flow Indicating Transmitter	AI	BAC System Skid	Unclassified	4-20mA HART	24VDC	NA	NA		NA	I-101		
P-00-FIT-814	I-81	Electromagnetic Flow Indicating Transmitter	Filter No 2 Flow Indicating Transmitter	AI	BAC System Skid	Unclassified	4-20mA HART	24VDC	NA	NA		NA	I-101		
P-00-LE-800	I-81	Level Antenna	Filter No 1 Level Element	NA	BAC System Skid	Unclassified	NA		NA	NA	0-30 ft	NA	I-202		
P-00-LE-810	I-81	Level Antenna	Filter No 2 Level Element	NA	BAC System Skid	Unclassified	NA		NA	NA	0-30 ft	NA	I-202		
P-00-LT-800	I-81	Radar Level Transmitter	Filter No 1 Radar Level Transmitter	AI	BAC System Skid	Unclassified	120VAC	24VDC	NA	NA	0-30 ft	TBD	TBD		
P-00-LT-810	I-81	Radar Level Transmitter	Filter No 2 Radar Level Transmitter	AI	BAC System Skid	Unclassified	120VAC	24VDC	NA	NA	0-30 ft	TBD	TBD		
P-00-PDIT-800	I-81	Differential Pressure Transmitter	Filter No 1 Inlet Line Differential Pressure Transmitter	AI	BAC System Skid	Unclassified	NA		NA	NA	0 - 1 psid [VTC]	0 - 1 psid [VTC]	TBD		
P-00-PDIT-810	I-81	Differential Pressure Transmitter	Filter No 2 Inlet Line Differential Pressure Transmitter	AI	BAC System Skid	Unclassified	NA		NA	NA	0 - 1 psid [VTC]	0 - 1 psid [VTC]	TBD		
P-00-AE-811	I-82	UV Transmittance Analyzer Element	Ozone Influent Analyzer Panel No 2 UVT Analyzer Element	AI	Ozone Influent Analyzer Panel No 2	Unclassified	NA		NA	NA	-1000 to 1000 mV	NA	I-501		
P-00-AE-812	I-82	Oxidation-Reduction Potential Analyzer Element	Ozone Influent Analyzer Panel No 2 ORP Analyzer Element	AI	Ozone Influent Analyzer Panel No 2	Unclassified	NA		NA	NA	-1000 to 1000 mV	NA	I-501		
P-00-AIT-811	I-82	UV Transmittance Analyzer Indicating Transmitter	Ozone Influent Analyzer Panel No 2 UVT Analyzer Indicating Transmitter	AI	Ozone Influent Analyzer Panel No 2	Unclassified	24VDC		Yes	Yes	TBD	NA	I-501		
P-00-AIT-812	I-82	Oxidation-Reduction Potential Analyzer Indicating Transmitter	Ozone Influent Analyzer Panel No 2 ORP Analyzer Indicating Transmitte	AI	Ozone Influent Analyzer Panel No 2	Unclassified	24VDC	24VDC	Yes	Yes	TBD	NA	I-501		
P-00-FI-811	I-82	Flow Indicator	Ozone Influent Analyzer Panel No 2 Flow Indicator No 1	NA	Ozone Influent Analyzer Panel No 2	Unclassified	NA		NA	NA	TBD	NA	I-106		
P-00-FI-812	I-82	Flow Indicator	Ozone Influent Analyzer Panel No 2 Flow Indicator No 2	NA	Ozone Influent Analyzer Panel No 2	Unclassified	NA		NA	NA	TBD	NA	I-106		
P-00-FSL-811	I-82	Flow Switch Low	Ozone Influent Analyzer Panel No 2 Flow Switch Low	DI	Ozone Influent Analyzer Panel No 2	Unclassified	24VDC	24VDC	NA	NA	NA	TBD	I-152		
P-00-LIT-820	I-82	Level Indicating Transmitter	BAC Filtrate Tank Level Indicating Transmitter	AI	BAC Filtrate Tank	Unclassified	4-20mA HART		NA	NA			I-202		
P-00-PI-811	I-82	Pressure Gauge	Ozone Influent Analyzer Panel No 2 Pressure Gauge	NA	Ozone Influent Analyzer Panel No 2	Unclassified	NA		NA	NA	TBD	NA	I-301		
P-00-PI-824	I-82	Pressure Gauge	MF Transfer Pump Discharge Pressure Gauge	NA	MF Transfer Pump Discharge Header	Unclassified	NA		NA	NA	TBD	NA	I-301		
P-00-TSH-824	I-82	Temperature Switch High	MF Transfer Pump Motor Temperature Switch High	DI	MF Transfer Pump Motor	Unclassified	120VAC		NA	NA	NA	NA	I-401		
P-00-FE-861	I-83	Electromagnetic Flow Meter	BAC Backwash Supply Pump Discharge Flow Element	NA	BAC Vendor Package	Unclassified	NA		NA	NA		NA	I-101		
P-00-FIT-861	I-83	Electromagnetic Flow Indicating Transmitter	BAC Backwash Supply Pump Discharge Flow Indicating Transmitter	AI	BAC Vendor Package	Unclassified	4-20mA HART	24VDC	NA	NA		NA	I-101		
P-00-FSL-840	I-83	Flow Switch Low	BAC Backwash Transfer Pump Discharge Flow Switch Low	DI	BAC Backwash Transfer Pump Discharge Header	Unclassified	24VDC	24VDC	NA	NA	NA	TBD	I-152		
P-00-FSL-860	I-83	Flow Switch Low	BAC Backwash Supply Pump Discharge Flow Switch Low	DI	BAC Vendor Package	Unclassified	24VDC	24VDC	NA	NA	NA	TBD	I-152		
P-00-LIT-830	I-83	Level Indicating Transmitter	BAC Filtrate Overflow Tank Level Indicating Transmitter	AI	BAC Filtrate Overflow Tank	Unclassified	4-20mA HART		NA	NA			I-202		
P-00-LIT-850	I-83	Level Indicating Transmitter	BAC Backwash Supply Tank Level Indicating Transmitter	AI	BAC Backwash Supply Tank	Unclassified	4-20mA HART		NA	NA			I-202		
P-00-PI-840	I-83	Pressure Gauge	BAC Backwash Transfer Pump Discharge Pressure Gauge	NA	BAC Backwash Transfer Pump Discharge Header	Unclassified	NA		NA	NA	TBD	NA	I-301		
P-00-PI-860	I-83	Pressure Gauge	BAC Backwash Supply Pump Discharge Pressure Gauge	NA	BAC Vendor Package	Unclassified	NA		NA	NA	TBD	NA	I-301		
P-00-TSH-840	I-83	Temperature Switch High	BAC Backwash Transfer Pump Motor Temperature Switch High	DI	BAC Backwash Transfer Pump Motor	Unclassified	120VAC		NA	NA	NA	NA	I-401		
P-00-TSH-860	I-83	Temperature Switch High	BAC Backwash Supply Pump Motor Temperature Switch High	DI	BAC Vendor Package	Unclassified	120VAC		NA	NA	NA	NA	I-401		
P-00-PI-870A	I-84	Pressure Gauge	Air Scour Blower Discharge Pressure Gauge No 1	NA	BAC Air Scour Blower Vendor Skid	Unclassified	NA		NA	NA	TBD	NA	I-301		
P-00-PI-870B	I-84	Pressure Gauge	Air Scour Blower Discharge Pressure Gauge No 2	NA	BAC Air Scour Blower Vendor Skid	Unclassified	NA		NA	NA	TBD	NA	I-301		
P-00-TI-870	I-84	Temperature Indicator	Air Scour Blower Discharge Temperature Indicator	NA	BAC Air Scour Blower Vendor Skid	Unclassified	NA		NA	NA		NA	TBD		
P-00-TSH-870	I-84	Temperature Switch High	Air Scour Blower Motor Temperature Switch High	DI	BAC Air Scour Blower Vendor Skid	Unclassified	120VAC		NA	NA	NA	NA	I-401		
P-00-AE-813	I-85	Total Chlorine Analyzer Element	Ozone Influent Analyzer Panel No 1 Total Chlorine Analyzer Element	AI	Ozone Influent Analyzer Panel No 1	Unclassified	NA		NA	NA			I-501		
P-00-AE-821	I-85	Turbidity Analyzer Element	BAC Filtrate Analyzer Panel TURB Analyzer Element	AI	BAC Filtrate Analyzer Panel	Unclassified	NA		NA	NA			I-501		
P-00-AE-822	I-85	Total Organic Carbon Analyzer Element	BAC Filtrate Analyzer Panel TOC Analyzer Element	AI	BAC Filtrate Analyzer Panel	Unclassified	NA		NA	NA			I-501		
P-00-AE-823	I-85	UV Transmittance Analyzer Element	BAC Filtrate Analyzer Panel UVT Analyzer Element	AI	BAC Filtrate Analyzer Panel	Unclassified	NA		NA	NA			I-501		
P-00-AE-860	I-85	Total Chlorine Analyzer Element	MF Influent Analyzer Panel Total Chlorine Analyzer Element	AI	MF Influent Analyzer Panel	Unclassified	NA		NA	NA			I-501		
P-00-AE-861	I-85	Ammonia Analyzer Element	MF Influent Analyzer Panel NH3 Analyzer Element	AI	MF Influent Analyzer Panel	Unclassified	NA		NA	NA			I-501		
P-00-AIT-813	I-85	Total Chlorine Analyzer Indicating Transmitter	Ozone Influent Analyzer Panel No 1 Total Chlorine Analyzer Indicating Transmitter	AI	Ozone Influent Analyzer Panel No 1	Unclassified	24VDC		Yes	Yes			I-501		
P-00-AIT-821	I-85	Turbidity Analyzer Indicating Transmitter	BAC Filtrate Analyzer Panel TURB Analyzer Indicating Transmitter	AI	BAC Filtrate Analyzer Panel	Unclassified	24VDC	24VDC	Yes	Yes			I-501		
P-00-AIT-822	I-85	Total Organic Carbon Analyzer Indicating Transmitter	BAC Filtrate Analyzer Panel TOC Analyzer Indicating Transmitter	AI	BAC Filtrate Analyzer Panel	Unclassified	120VAC		Yes	Yes			I-501		
P-00-AIT-823	I-85	UV Transmittance Analyzer Indicating Transmitter	BAC Filtrate Analyzer Panel UVT Analyzer Indicating Transmitter	AI	BAC Filtrate Analyzer Panel	Unclassified	NA		NA	NA			I-501		
P-00-AIT-860	I-85	Total Chlorine Analyzer Indicating Transmitter	MF Influent Analyzer Panel Total Chlorine Analyzer Indicating Transmitter	AI	MF Influent Analyzer Panel	Unclassified	24VDC		Yes	Yes			I-501		
P-00-AIT-861	I-85	Ammonia Analyzer Indicating Transmitter	MF Influent Analyzer Panel NH3 Analyzer Indicating Transmitter	AI	MF Influent Analyzer Panel	Unclassified	24VDC		Yes	Yes			I-501		
P-00-FI-813	I-85	Flow Indicator	Ozone Influent Analyzer Panel No 1 Flow Indicator	NA	Ozone Influent Analyzer Panel No 1	Unclassified	NA		NA	NA	TBD	NA	I-106		
P-00-FI-821	I-85	Flow Indicator	BAC Filtrate Analyzer Panel Flow Indicator No 1	NA	BAC Filtrate Analyzer Panel	Unclassified	NA		NA	NA	TBD	NA	I-106		
P-00-FI-822	I-85	Flow Indicator	BAC Filtrate Analyzer Panel Flow Indicator No 2	NA	BAC Filtrate Analyzer Panel	Unclassified	NA		NA	NA	TBD	NA	I-106		
P-00-FI-823	I-85	Flow Indicator	BAC Filtrate Analyzer Panel Flow Indicator No 3	NA	BAC Filtrate Analyzer Panel	Unclassified	NA		NA	NA	TBD	NA	I-106		
P-00-FI-860	I-85	Flow Indicator	MF Influent Analyzer Panel Flow Indicator No 1	NA	MF Influent Analyzer Panel	Unclassified	NA		NA	NA	TBD	NA	I-106		
P-00-FI-861	I-85	Flow Indicator	MF Influent Analyzer Panel Flow Indicator No 2	NA	MF Influent Analyzer Panel	Unclassified	NA		NA	NA	TBD	NA	I-106		
P-00-FSL-813	I-85	Flow Switch Low	Ozone Influent Analyzer Panel No 1 Flow Switch Low	DI	Ozone Influent Analyzer Panel No 1	Unclassified	24VDC	24VDC	NA	NA	NA	TBD	I-152		
P-00-FSL-821	I-85	Flow Switch Low	BAC Filtrate Analyzer Panel Flow Switch Low	DI	BAC Filtrate Analyzer Panel	Unclassified	24VDC	24VDC	NA	NA	NA	TBD	I-152		
P-00-FSL-859	I-85	Flow Switch Low	MF Influent Analyzer Panel Flow Switch Low	DI	MF Influent Analyzer Panel	Unclassified	24VDC	24VDC	NA	NA	NA	TBD	I-152		
P-00-PI-813	I-85	Pressure Gauge	Ozone Influent Analyzer Panel No 1 Pressure Gauge	NA	Ozone Influent Analyzer Panel No 1	Unclassified	NA		NA	NA	TBD	NA	I-301		
P-00-PI-821	I-85	Pressure Gauge	BAC Filtrate Analyzer Panel Pressure Gauge	NA	BAC Filtrate Analyzer Panel	Unclassified	NA		NA	NA	TBD	NA	I-301		
P-00-PI-859	I-85	Pressure Gauge	MF Influent Analyzer Panel Pressure Gauge	NA	MF Influent Analyzer Panel	Unclassified	NA		NA	NA	TBD	NA	I-301		
P-00-FE-865	I-86	Electromagnetic Flow Meter	MF Backwash Feed Pump Discharge Flow Element	NA	MF System Skid	Unclassified	NA		NA	NA		NA	I-101		
P-00-FE-867	I-86	Electromagnetic Flow Meter	MF Feed/CIP Pump No 1 Discharge Flow Element	NA	MF System Skid	Unclassified	NA		NA	NA		NA	I-101		
P-00-FE-868	I-86	Electromagnetic Flow Meter	MF Feed/CIP Pump No 2 Discharge Flow Element	NA	MF System Skid	Unclassified	NA		NA	NA		NA	I-101		

Instrument Tag	Drawing Number	Instrument Type	Service Description	IO Type	Location	Area Classification	Signal Detail	Req. Power Supply	LSA Req	Sunshield Req	Calibrated Range	Instrument Setpoint	Installation Detail Ref.	Comments	Revision
P-00-FIT-865	I-86	Electromagnetic Flow Indicating Transmitter	MF Backwash Feed Pump Discharge Flow Indicating Transmitter	AI	MF System Skid	Unclassified	4-20mA HART	24VDC	NA	NA		NA	I-101		
P-00-FIT-867	I-86	Electromagnetic Flow Indicating Transmitter	MF Feed/CIP Pump No 1 Discharge Flow Indicating Transmitter	AI	MF System Skid	Unclassified	4-20mA HART	24VDC	NA	NA		NA	I-101		
P-00-FIT-868	I-86	Electromagnetic Flow Indicating Transmitter	MF Feed/CIP Pump No 2 Discharge Flow Indicating Transmitter	AI	MF System Skid	Unclassified	4-20mA HART	24VDC	NA	NA		NA	I-101		
P-00-TSH-862	I-86	Temperature Switch High	MF Backwash Feed Pump Motor Temperature Switch High	DI	MF System Skid	Unclassified	120VAC		NA	NA	NA	NA	I-401		
P-00-TSH-863	I-86	Temperature Switch High	MF Feed/CIP Pump No 1 Motor Temperature Switch High	DI	MF System Skid	Unclassified	120VAC		NA	NA	NA	NA	I-401		
P-00-TSH-864	I-86	Temperature Switch High	MF Feed/CIP Pump No 2 Motor Temperature Switch High	DI	MF System Skid	Unclassified	120VAC		NA	NA	NA	NA	I-401		
P-00-AE-878	I-87	Adenosine Triphosphate Analyzer Element	MF Feed/CIP Supply ATP Analyzer Elemen	AI	MF System Skid	Unclassified	NA		NA	NA			I-501		
P-00-AE-879	I-87	Turbidity Analyzer Element	MF BW Supply TURB Analyzer Element	AI	MF System Skid	Unclassified	NA		NA	NA			I-501		
P-00-AIT-878	I-87	Adenosine Triphosphate Analyzer Indicating Transmitter	MF Feed/CIP Supply ATP Analyzer Indicating Transmitter	AI	MF System Skid	Unclassified	24VDC		Yes	Yes			I-501		
P-00-AIT-879	I-87	Turbidity Analyzer Indicating Transmitter	MF BW Supply TURB Analyzer Indicating Transmitter	AI	MF System Skid	Unclassified	24VDC		Yes	Yes			I-501		
P-00-FE-880	I-87	Electromagnetic Flow Meter	Murray MF System Train 1 Inlet Header Flow Element	NA	MF System Skid	Unclassified	NA		NA	NA		NA	I-101		
P-00-FI-878	I-87	Flow Indicator	MF Feed/CIP Supply Flow Indicator No 1	NA	MF System Skid	Unclassified	NA		NA	NA	TBD	NA	I-106		
P-00-FI-879	I-87	Flow Indicator	MF Feed/CIP Supply Flow Indicator No 2	NA	MF System Skid	Unclassified	NA		NA	NA	TBD	NA	I-106		
P-00-FIT-866	I-87	Electromagnetic Flow Indicating Transmitter	MF Air Compressed Flow Indicating Transmitter	AI	MF System Skid	Unclassified	4-20mA HART	24VDC	NA	NA		NA	I-101		
P-00-FIT-880	I-87	Electromagnetic Flow Indicating Transmitter	Murray MF System Train 1 Inlet Header Flow Indicating Transmitter	AI	MF System Skid	Unclassified	4-20mA HART		NA	NA		NA	I-101		
P-00-PI-878	I-87	Pressure Gauge	MF Feed/CIP Supply Pressure Gauge	AI	MF System Skid	Unclassified	NA		NA	NA	TBD	NA	I-301		
P-00-PI-880	I-87	Pressure Gauge	MF BW Supply Pressure Gauge	AI	MF System Skid	Unclassified	NA		NA	NA	TBD	NA	I-301		
P-00-PIT-879	I-87	Pressure Indicating Transmitter	MF BW Supply Pressure Indicating Transmitter	AI	MF System Skid	Unclassified	NA		NA	NA	0 - 15 psig [VTC]	NA	I-303		
P-00-PT-878	I-87	Pressure Transmitter	MF Feed/CIP Supply Pressure Transmitter	AI	MF System Skid	Unclassified	NA		NA	NA			I-303		
P-00-PT-880	I-87	Pressure Transmitter	MF BW Supply Pressure Transmitter	AI	MF System Skid	Unclassified	NA		NA	NA			I-303		
P-00-TE-878	I-87	Temperature Element	MF Feed/CIP Supply Temperature Element	NA	MF System Skid	Unclassified	NA		NA	NA		NA	I-401		
P-00-TT-878	I-87	Temperature Switch High	MF Feed/CIP Supply Temperature Switch High	DI	MF System Skid	Unclassified	NA		NA	NA			I-401		
P-00-AE-884	I-88	Turbidity Analyzer Element	MF BW Supply TURB Analyzer Element	AI	MF System Skid	Unclassified	NA		NA	NA			I-501		
P-00-AIT-884	I-88	Turbidity Analyzer Indicating Transmitter	MF BW Supply TURB Analyzer Indicating Transmitter	AI	MF System Skid	Unclassified	24VDC		Yes	Yes			I-501		
P-00-FE-884	I-88	Electromagnetic Flow Meter	Murray MF System Train 2 Inlet Header Flow Element	NA	MF System Skid	Unclassified	NA		NA	NA		NA	I-101		
P-00-FIT-884	I-88	Electromagnetic Flow Indicating Transmitter	Murray MF System Train 2 Inlet Header Flow Indicating Transmitter	AI	MF System Skid	Unclassified	4-20mA HART		NA	NA		NA	I-101		
P-00-PI-881	I-88	Pressure Gauge	MF Feed/CIP Supply Pressure Gauge	AI	MF System Skid	Unclassified	NA		NA	NA	TBD	NA	I-301		
P-00-PI-884	I-88	Pressure Gauge	MF BW Supply Pressure Gauge	AI	MF System Skid	Unclassified	NA		NA	NA	TBD	NA	I-301		
P-00-PIT-884	I-88	Pressure Indicating Transmitter	MF BW Supply Pressure Indicating Transmitter	AI	MF System Skid	Unclassified	NA		NA	NA	0 - 15 psig [VTC]	NA	I-303		
P-00-PT-881	I-88	Pressure Transmitter	MF Feed/CIP Supply Pressure Transmitter	AI	MF System Skid	Unclassified	NA		NA	NA			I-303		
P-00-PT-884	I-88	Pressure Transmitter	MF BW Supply Pressure Transmitter	AI	MF System Skid	Unclassified	NA		NA	NA			I-303		
P-00-TE-881	I-88	Temperature Element	MF Feed/CIP Supply Temperature Element	NA	MF System Skid	Unclassified	NA		NA	NA		NA	I-401		
P-00-TT-881	I-88	Temperature Switch High	MF Feed/CIP Supply Temperature Switch High	DI	MF System Skid	Unclassified	NA		NA	NA			I-401		
P-00-JI-895	I-89	Power Indicater	MF CIP Tank Power Indicater	DI	MF System Skid	Unclassified	NA		NA	NA					
P-00-LIT-895	I-89	Level Indicating Transmitter	MF CIP Tank Level Indicating Transmitter	AI	MF System Skid	Unclassified	4-20mA HART		NA	NA			I-202		
P-00-PI-896	I-89	Pressure Gauge	MF CIP Pump Discharge Pressure Gauge	NA	MF System Skid	Unclassified	NA		NA	NA	TBD	NA	I-301		
P-00-PSH-896	I-89	Pressure Switch High	MF CIP MIX Pump Discharge Pressure Switch High	DI	MF System Skid	Unclassified	120VAC		NA	NA	NA	TBD	I-301		
P-00-TIC-895	I-89	Temperature Indicator Controller	MF CIP Tank Temperature Indicator Controller	AI	MF System Skid	Unclassified	NA		NA	NA					
P-00-TSH-896	I-89	Temperature Switch High	MF CIP Pump Motor Temperature Switch High	DI	MF System Skid	Unclassified	120VAC		NA	NA	NA	NA	I-401		
P-00-AE-903	I-91	Chlorine Analyzer Element	RO Feed Analyzer Panel FCL Analyzer Element	AI	Murray RO Feed Analyzer Panel	Unclassified	NA		NA	NA			I-501		
P-00-AE-904	I-91	Oxidation-Reduction Potential Analyzer Element	RO Feed Analyzer Panel ORP Analyzer Element	AI	Murray RO Feed Analyzer Panel	Unclassified	NA		NA	NA	-1000 to 1000 mV	NA	I-501		
P-00-AIT-903	I-91	Chlorine Analyzer Indicating Transmitter	RO Feed Analyzer Panel FCL Analyzer Indicating Transmitte	AI	Murray RO Feed Analyzer Panel	Unclassified	24VDC		Yes	Yes			I-501		
P-00-AIT-904	I-91	Oxidation-Reduction Potential Analyzer Indicating Transmitter	RO Feed Analyzer Panel ORP Analyzer Indicating Transmitte	AI	Murray RO Feed Analyzer Panel	Unclassified	24VDC		Yes	Yes	TBD	NA	I-501		
P-00-FI-903	I-91	Flow Indicator	RO Feed Analyzer Panel Flow Indicator No 1	NA	Murray RO Feed Analyzer Panel	Unclassified	NA		NA	NA	TBD	NA	I-106		
P-00-FI-904	I-91	Flow Indicator	RO Feed Analyzer Panel Flow Indicator No 2	NA	Murray RO Feed Analyzer Panel	Unclassified	NA		NA	NA	TBD	NA	I-106		
P-00-FSL-901	I-91	Flow Switch Low	RO Feed Analyzer Panel Inlet Line Flow Switch Low	DI	Murray RO Feed Analyzer Panel	Unclassified	24VDC	120VAC	NA	NA	NA	TBD	I-152		
P-00-LIT-900	I-91	Level Indicating Transmitter	RO Feed Tank Level Indicating Transmitter	AI	RO Feed Tank	Unclassified	4-20mA HART		NA	NA			I-202		
P-00-PI-901	I-91	Pressure Gauge	RO Feed Analyzer Panel Inlet Line Pressure Gauge	NA	Murray RO Feed Analyzer Panel	Unclassified	NA		NA	NA	TBD	NA	I-301		
P-00-FSL-910	I-92	Flow Switch Low	Murray Conventalonal RO Transfer Pump Discharge Flow Switch Low	DI	Murray Conventalonal RO Transfer Pump Discharge Header	Unclassified	NA		NA	NA	NA	TBD	I-152		
P-00-PI-910	I-92	Pressure Gauge	Murray Conventalonal RO Transfer Pump Discharge Pressure Gauge	NA	Murray Conventalonal RO Transfer Pump Discharge Header	Unclassified	NA		NA	NA	TBD	NA	I-301		
P-00-TSH-910	I-92	Temperature Switch High	Murray Conventalonal RO Transfer Pump Motor Temperature Switch High	DI	Murray Conventalonal RO Transfer Pump Motor	Unclassified	120VAC		NA	NA	NA	NA	I-401		
P-00-AE-922	I-93	Oxidation-Reduction Potential Analyzer Element	BY Rome ORP Analyzer Element	AI	3-Stage Conventional Reverse Osmosis System	Unclassified	NA		NA	NA	-1000 to 1000 mV	NA	I-501		
P-00-AE-923	I-93	PH Analyzer Element	BY Rome PH Analyzer Element	AI	3-Stage Conventional Reverse Osmosis System	Unclassified	NA		NA	NA			I-501		
P-00-AE-924	I-93	Conductivity Analyzer Element	Murray RO System Cartridge Filter Discharge COND Analyzer Element	AI	3-Stage Conventional Reverse Osmosis System	Unclassified	NA		NA	NA			I-501		
P-00-AIT-922	I-93	Oxidation-Reduction Potential Analyzer Indicating Transmitter	BY Rome ORP Analyzer Indicating Transmitte	AI	3-Stage Conventional Reverse Osmosis System	Unclassified	24VDC	24VDC	Yes	Yes	TBD	NA	I-501		
P-00-AIT-923	I-93	PH Analyzer Indicating Transmitter	BY Rome PH Analyzer Indicating Transmitter	AI	3-Stage Conventional Reverse Osmosis System	Unclassified	24VDC	24VDC	Yes	Yes			I-501		
P-00-AIT-924	I-93	Conductivity Analyzer Indicating Transmitter	Murray RO System Cartridge Filter Discharge COND Analyzer Indicating Transmitter	AI	3-Stage Conventional Reverse Osmosis System	Unclassified	24VDC	24VDC	Yes	Yes			I-501		
P-00-FE-922	I-93	Electromagnetic Flow Meter	Murray RO System Cartridge Filter Inlet Line Flow Element	NA	3-Stage Conventional Reverse Osmosis System	Unclassified	NA		NA	NA		NA	I-101		
P-00-FIT-922	I-93	Electromagnetic Flow Indicating Transmitter	Murray RO System Cartridge Filter Inlet Line Flow Indicating Transmitter	AI	3-Stage Conventional Reverse Osmosis System	Unclassified	4-20mA HART	24VDC	NA	NA		NA	I-101		
P-00-PI-923	I-93	Pressure Gauge	Murray RO System Cartridge Filter Pressure Gauge	NA	3-Stage Conventional Reverse Osmosis System	Unclassified	NA		NA	NA	TBD	NA	I-301		
P-00-PIT-922	I-93	Pressure Indicating Transmitter	Murray RO System Cartridge Filter Inlet Line Pressure Indicating Transmitter	AI	3-Stage Conventional Reverse Osmosis System	Unclassified	NA		NA	NA	0 - 15 psig [VTC]	NA	I-303		
P-00-PIT-923	I-93	Pressure Indicating Transmitter	Murray RO System Cartridge Filter Discharge Pressure Indicating Transmitter	AI	3-Stage Conventional Reverse Osmosis System	Unclassified	NA		NA	NA	0 - 15 psig [VTC]	NA	I-303		
P-00-TE-923	I-93	Temperature Element	Murray RO System Cartridge Filter Discharge Temperature Element	NA	3-Stage Conventional Reverse Osmosis System	Unclassified	NA		NA	NA		NA	I-401		
P-00-TIT-923	I-93	Temperature Indicating Transmitter	Murray RO System Cartridge Filter Discharge Temperature Indicator	NA	3-Stage Conventional Reverse Osmosis System	Unclassified	NA		NA	NA			I-401		
P-00-AE-935	I-94	Conductivity Analyzer Element	BY Rome COND Analyzer Element	AI	3-Stage Conventional Reverse Osmosis System	Unclassified	NA		NA	NA			I-501		
P-00-AIT-935	I-94	Conductivity Analyzer Indicating Transmitter	BY Rome COND Analyzer Indicating Transmitter	AI	3-Stage Conventional Reverse Osmosis System	Unclassified	24VDC	24VDC	Yes	Yes			I-501		
P-00-PI-930A	I-94	Pressure Gauge	Murray RO System First Stage Feed Pump Inlet Line Pressure Gauge	NA	3-Stage Conventional Reverse Osmosis System	Unclassified	NA		NA	NA	TBD	NA	I-301		
P-00-PI-930B	I-94	Pressure Gauge	Murray RO System First Stage Feed Pump Discharge Pressure Gauge	NA	3-Stage Conventional Reverse Osmosis System	Unclassified	NA		NA	NA	TBD	NA	I-301		

Instrument Tag	Drawing Number	Instrument Type	Service Description	IO Type	Location	Area Classification	Signal Detail	Req. Power Supply	LSA Req	Sunshield Req	Calibrated Range	Instrument Setpoint	Installation Detail Ref.	Comments	Revision
P-00-PI-935	I-94	Pressure Gauge	Murray RO System First Stage Membranes Discharge Pressure Gauge	NA	3-Stage Conventional Reverse Osmosis System	Unclassified	NA		NA	NA	TBD	NA	I-301		
P-00-PIT-931	I-94	Pressure Indicating Transmitter	Murray RO System First Stage Feed Pump Discharge Pressure Indicating Transmitter	AI	3-Stage Conventional Reverse Osmosis System	Unclassified	NA		NA	NA	0 - 15 psig [VTC]	NA	I-303		
P-00-PSH-930	I-94	Pressure Switch High	Murray RO System First Stage Feed Pump Pressure Switch High	DI	3-Stage Conventional Reverse Osmosis System	Unclassified	120VAC		NA	NA	NA	TBD	I-301		
P-00-PSL-930	I-94	Pressure Switch Low	Murray RO System First Stage Feed Pump Pressure Switch Low	DI	3-Stage Conventional Reverse Osmosis System	Unclassified	120VAC		NA	NA					
P-00-TSH-930	I-94	Temperature Switch High	Murray RO System First Stage Feed Pump Motor Temperature Switch High	DI	3-Stage Conventional Reverse Osmosis System	Unclassified	120VAC		NA	NA	NA	NA	I-401		
P-00-AE-945	I-95	Conductivity Analyzer Element	BY Rome COND Analyzer Element	AI	3-Stage Conventional Reverse Osmosis System	Unclassified	NA		NA	NA			I-501		
P-00-AIT-945	I-95	Conductivity Analyzer Indicating Transmitter	BY Rome COND Analyzer Indicating Transmitter	AI	3-Stage Conventional Reverse Osmosis System	Unclassified	24VDC	24VDC	Yes	Yes			I-501		
P-00-FE-941	I-95	Electromagnetic Flow Meter	Murray RO System Second Stage Feed Pump Discharge Flow Element	NA	3-Stage Conventional Reverse Osmosis System	Unclassified	NA		NA	NA		NA	I-101		
P-00-FE-947	I-95	Electromagnetic Flow Meter	Murray RO System Second Stage Membranes Discharge Flow Element	NA	3-Stage Conventional Reverse Osmosis System	Unclassified	NA		NA	NA		NA	I-101		
P-00-FIT-941	I-95	Electromagnetic Flow Indicating Transmitter	Murray RO System Second Stage Feed Pump Discharge Flow Indicating Transmitter	AI	3-Stage Conventional Reverse Osmosis System	Unclassified	4-20mA HART	24VDC	NA	NA		NA	I-101		
P-00-FIT-947	I-95	Electromagnetic Flow Indicating Transmitter	Murray RO System Second Stage Membranes Discharge Flow Indicating Transmitter	AI	3-Stage Conventional Reverse Osmosis System	Unclassified	4-20mA HART	24VDC	NA	NA		NA	I-101		
P-00-PIT-940	I-95	Pressure Indicating Transmitter	Murray RO System Second Stage Feed Pump Inlet Line Pressure Indicating Transmitter	AI	3-Stage Conventional Reverse Osmosis System	Unclassified	NA		NA	NA	0 - 15 psig [VTC]	NA	I-303		
P-00-PIT-941	I-95	Pressure Indicating Transmitter	Murray RO System Second Stage Feed Pump Discharge Pressure Indicating Transmitter	AI	3-Stage Conventional Reverse Osmosis System	Unclassified	NA		NA	NA	0 - 15 psig [VTC]	NA	I-303		
P-00-PIT-946	I-95	Pressure Indicating Transmitter	Murray RO System Second Stage Membranes Discharge Pressure Indicating Transmitter	AI	3-Stage Conventional Reverse Osmosis System	Unclassified	NA		NA	NA	0 - 15 psig [VTC]	NA	I-303		
P-00-TSH-940	I-95	Temperature Switch High	Murray RO System Second Stage Feed Pump Motor Temperature Switch High	DI	3-Stage Conventional Reverse Osmosis System	Unclassified	120VAC		NA	NA	NA	NA	I-401		
P-00-AE-951	I-96	PH Analyzer Element	Murray RO System Third Stage Feed Pump Inlet Line PH Analyzer Element	AI	3-Stage Conventional Reverse Osmosis System	Unclassified	NA		NA	NA			I-501		
P-00-AE-952	I-96	Conductivity Analyzer Element	Murray RO System Third Stage Feed Pump Inlet Line COND Analyzer Element	AI	3-Stage Conventional Reverse Osmosis System	Unclassified	NA		NA	NA			I-501		
P-00-AE-956	I-96	Conductivity Analyzer Element	Murray RO System Third Stage Membranes Discharge COND Analyzer Element No 1	AI	3-Stage Conventional Reverse Osmosis System	Unclassified	NA		NA	NA			I-501		
P-00-AE-958	I-96	Conductivity Analyzer Element	Murray RO System Third Stage Membranes Discharge COND Analyzer Element No 2	AI	3-Stage Conventional Reverse Osmosis System	Unclassified	NA		NA	NA			I-501		
P-00-AIT-951	I-96	PH Analyzer Indicating Transmitter	Murray RO System Third Stage Feed Pump Inlet Line PH Analyzer Indicating Transmitter	AI	3-Stage Conventional Reverse Osmosis System	Unclassified	24VDC	24VDC	Yes	Yes			I-501		
P-00-AIT-952	I-96	Conductivity Analyzer Indicating Transmitter	Murray RO System Third Stage Feed Pump Inlet Line COND Analyzer Indicating Transmitter	AI	3-Stage Conventional Reverse Osmosis System	Unclassified	24VDC	24VDC	Yes	Yes			I-501		
P-00-AIT-956	I-96	Conductivity Analyzer Indicating Transmitter	Murray RO System Third Stage Membranes Discharge COND Analyzer Indicating Transmitter No 1	AI	3-Stage Conventional Reverse Osmosis System	Unclassified	24VDC	24VDC	Yes	Yes			I-501		
P-00-AIT-958	I-96	Conductivity Analyzer Indicating Transmitter	Murray RO System Third Stage Membranes Discharge COND Analyzer Indicating Transmitter No 2	AI	3-Stage Conventional Reverse Osmosis System	Unclassified	24VDC		Yes	Yes			I-501		
P-00-FE-956	I-96	Electromagnetic Flow Meter	Murray RO System Third Stage Membranes Discharge Flow Element No 1	NA	3-Stage Conventional Reverse Osmosis System	Unclassified	NA		NA	NA		NA	I-101		
P-00-FE-958	I-96	Electromagnetic Flow Meter	Murray RO System Third Stage Membranes Discharge Flow Element No 2	NA	3-Stage Conventional Reverse Osmosis System	Unclassified	NA		NA	NA		NA	I-101		
P-00-FIT-956	I-96	Electromagnetic Flow Indicating Transmitter	Murray RO System Third Stage Membranes Discharge Flow Indicating Transmitter No 1	AI	3-Stage Conventional Reverse Osmosis System	Unclassified	4-20mA HART	24VDC	NA	NA		NA	I-101		
P-00-FIT-958	I-96	Electromagnetic Flow Indicating Transmitter	Murray RO System Third Stage Membranes Discharge Flow Indicating Transmitter No 2	AI	3-Stage Conventional Reverse Osmosis System	Unclassified	4-20mA HART	24VDC	NA	NA		NA	I-101		
P-00-PIT-955	I-96	Pressure Indicating Transmitter	Murray RO System Third Stage Feed Pump Inlet Line Pressure Indicating Transmitter	AI	3-Stage Conventional Reverse Osmosis System	Unclassified	NA		NA	NA	0 - 15 psig [VTC]	NA	I-303		
P-00-PIT-956	I-96	Pressure Indicating Transmitter	Murray RO System Third Stage Feed Pump Discharge Pressure Indicating Transmitter	AI	3-Stage Conventional Reverse Osmosis System	Unclassified	NA		NA	NA	0 - 15 psig [VTC]	NA	I-303		
P-00-PIT-957	I-96	Pressure Indicating Transmitter	Murray RO System Third Stage Membranes Discharge Pressure Indicating Transmitter	AI	3-Stage Conventional Reverse Osmosis System	Unclassified	NA		NA	NA	0 - 15 psig [VTC]	NA	I-303		
P-00-PSL-955	I-96	Pressure Switch Low	Murray RO System Third Stage Feed Pump Pressure Switch Low	DI	3-Stage Conventional Reverse Osmosis System	Unclassified	120VAC		NA	NA					
P-00-TSH-955	I-96	Temperature Switch High	Murray RO System Third Stage Feed Pump Motor Temperature Switch High	DI	3-Stage Conventional Reverse Osmosis System	Unclassified	120VAC		NA	NA	NA	NA	I-401		
P-00-AE-960	I-97	Spectrum Analyzer Element	Murray RO Combined Permeate System SR Analyzer Element	AI	Murray RO Combined Permeate	Unclassified	NA		NA	NA			I-501		
P-00-AE-961	I-97	Conductivity Analyzer Element	Murray RO Combined Permeate System COND Analyzer Element	AI	3-Stage Conventional Reverse Osmosis System	Unclassified	NA		NA	NA			I-501		
P-00-AE-962	I-97	Total Organic Carbon Analyzer Element	Murray RO Combined Permeate System (San Vicente) TOC Analyzer Element	AI	Convetional RO Permeate TOC Analyzer Panel	Unclassified	NA						I-501		
P-00-AIT-960	I-97	Spectrum Analyzer Indicating Transmitter	Murray RO Combined Permeate System SR Analyzer Indicating Transmitter	AI	Murray RO Combined Permeate	Unclassified	24VDC	120VAC	Yes	Yes			I-501		
P-00-AIT-961	I-97	Conductivity Analyzer Indicating Transmitter	Murray RO Combined Permeate System COND Analyzer Indicating Transmitter	AI	3-Stage Conventional Reverse Osmosis System	Unclassified	24VDC	24VDC	Yes	Yes			I-501		
P-00-AIT-962	I-97	Total Organic Carbon Analyzer Indicating Transmitter	Murray RO Combined Permeate System (San Vicente) TOC Analyzer Indicating Transmitter	AI	Convetional RO Permeate TOC Analyzer Panel	Unclassified	24VDC		Yes	Yes			I-501		
P-00-FE-963	I-97	Electromagnetic Flow Meter	Murray RO Combined Permeate System Stage 1 and 2 Common Header Electromagnetic Flow Meter	NA	3-Stage Conventional Reverse Osmosis System	Unclassified	NA		NA	NA		NA	I-101		
P-00-FI-960A	I-97	Flow Indicator	Reversal RO System Flow Indicator	NA	Murray RO Combined Permeate	Unclassified	NA		NA	NA	TBD	NA	I-106		
P-00-FI-960B	I-97	Flow Indicator	Closed Circuit RO System Flow Indicator	NA	Murray RO Combined Permeate	Unclassified	NA		NA	NA	TBD	NA	I-106		
P-00-FI-960C	I-97	Flow Indicator	Reversal RO System (San Vicente) Flow Indicator No 1	NA	Murray RO Combined Permeate	Unclassified	NA		NA	NA	TBD	NA	I-106		
P-00-FI-960D	I-97	Flow Indicator	Murray RO System Stage 1, 2, 3 Common Header Sample To Spectrum Analyzer Flow Indicator	NA	Murray RO Combined Permeate	Unclassified	NA		NA	NA	TBD	NA	I-106		
P-00-FI-962A	I-97	Flow Indicator	Convetional RO Permeate TOC Analyzer Panel Flow Indicator No 1	NA	Convetional RO Permeate TOC Analyzer Panel	Unclassified	NA		NA	NA	TBD	NA	I-106		
P-00-FI-962B	I-97	Flow Indicator	Convetional RO Permeate TOC Analyzer Panel Flow Indicator No 2	NA	Convetional RO Permeate TOC Analyzer Panel	Unclassified	NA		NA	NA	TBD	NA	I-106		
P-00-FIT-963	I-97	Electromagnetic Flow Indicating Transmitter	Murray RO System Stage 1 and 2 Common Header Electromagnetic Flow Indicating Transmitter	AI	3-Stage Conventional Reverse Osmosis System	Unclassified	4-20mA HART	24VDC	NA	NA		NA	I-101		
P-00-FSL-962	I-97	Flow Switch Low	Convetional RO Permeate TOC Analyzer Panel Flow Switch Low	DI	Convetional RO Permeate TOC Analyzer Panel	Unclassified	24VDC	24VDC	NA	NA	NA	TBD	I-152		
P-00-PI-962	I-97	Pressure Gauge	Convetional RO Permeate TOC Analyzer Panel Pressure Gauge	NA	Convetional RO Permeate TOC Analyzer Panel	Unclassified	NA		NA	NA	TBD	NA	I-301		
P-00-PIT-963	I-97	Pressure Indicating Transmitter	Murray RO System Stage 1 and 2 Common Header Pressure Indicating Transmitter	AI	3-Stage Conventional Reverse Osmosis System	Unclassified	NA		NA	NA	0 - 15 psig [VTC]	NA	I-303		
P-00-FSL-970	I-98	Flow Switch Low	CCRO Feed Pump Discharge Flow Switch Low	DI	Closed Circuit Reverse Osmosis	Unclassified	24VDC	24VDC	NA	NA	NA	TBD	I-152		
P-00-FSL-985	I-98	Flow Switch Low	CCRO Permeate Pump Discharge Flow Switch Low	DI	CCRO Permeate Pump Discharge Header	Unclassified	24VDC	24VDC	NA	NA	NA	TBD	I-152		
P-00-LIT-980	I-98	Level Indicating Transmitter	CCRO Permeate Tank Level Indicating Transmitter	AI	CCRO Permeate Tank	Unclassified	4-20mA HART		NA	NA			I-202		
P-00-PI-970	I-98	Pressure Gauge	CCRO Feed Pump Discharge Pressure Gauge	NA	Closed Circuit Reverse Osmosis	Unclassified	NA		NA	NA	TBD	NA	I-301		
P-00-PI-985	I-98	Pressure Gauge	CCRO Permeate Pump Discharge Pressure Gauge	NA	CCRO Permeate Pump Discharge Header	Unclassified	NA		NA	NA	TBD	NA	I-301		
P-00-TSH-970	I-98	Temperature Switch High	CCRO Transfer Pump Motor Temperature Switch High	DI	Closed Circuit Reverse Osmosis	Unclassified	120VAC		NA	NA	NA	NA	I-401		
P-00-TSH-985	I-98	Temperature Switch High	CCRO Permeate Pump Motor Temperature Switch High	DI	CCRO Permeate Pump Motor	Unclassified	120VAC		NA	NA	NA	NA	I-401		
P-00-AE-996	I-99	Conductivity Analyzer Element	Flow Reversal RO Pilot COND Analyzer Element	AI	Flow Reversal RO Pilot	Unclassified	NA		NA	NA			I-501		
P-00-AIT-996	I-99	Conductivity Analyzer Indicating Transmitter	Flow Reversal RO Pilot COND Analyzer Indicating Transmitter	AI	Flow Reversal RO Pilot	Unclassified	24VDC	24VDC	Yes	Yes			I-501		
P-00-FSL-990	I-99	Flow Switch Low	FRRO Transfer Pump Discharge Flow Switch Low	DI	FRRO Transfer Pump Discharge Header	Unclassified	24VDC	24VDC	NA	NA	NA	TBD	I-152		
P-00-PI-990	I-99	Pressure Gauge	FRRO Transfer Pump Discharge Pressure Gauge	NA	FRRO Transfer Pump Discharge Header	Unclassified	NA		NA	NA	TBD	NA	I-301		
P-00-TSH-990	I-99	Temperature Switch High	FRRO Transfer Pump Motor Temperature Switch High	DI	FRRO Transfer Pump Motor	Unclassified	120VAC		NA	NA	NA	NA	I-401		

THIS PAGE INTENTIONALLY LEFT BLANK

CASSF Main PLC

AI	101
AO	46
DI	318
DO	96
DS	0
DSAO	4
DSDI	30
DSDO	4

IO Tag	I/O Type	Signal Type	Description	PID Drawing No.	Processor Cabinet No.	Rack/Slot/Channel	Comments	Remark
P-00-FIT-1066	AI	4-20mA	RO CIP Pump Discharge Flow Indicating Transmitter	I-106	CASSF Main PLC	By Contractor		
P-00-II-1065	DSAI	EtherNet / IP	RO CIP Pump Current Indicator	I-106	CASSF Main PLC	By Contractor		
P-00-JI-1060	DI	24VDC	RO CIP Tank Heater Power Status Indication	I-106	CASSF Main PLC	By Contractor		
P-00-LIT-1060	AI	4-20mA	RO CIP Tank Level Indicating Transmitter	I-106	CASSF Main PLC	By Contractor		
P-00-PAH-1065	DSDI	EtherNet / IP	RO CIP Pump Discharge Pressure Alarm High	I-106	CASSF Main PLC	By Contractor		
P-00-TAH-1065	DSDI	EtherNet / IP	RO CIP Pump Temperature Alarm High	I-106	CASSF Main PLC	By Contractor		
P-00-TIC-1060	AI	4-20mA	RO CIP Tank Heater Temperature Control	I-106	CASSF Main PLC	By Contractor		
P-00-YA-1065A	DSDI	EtherNet / IP	RO CIP Pump Fail Alarm	I-106	CASSF Main PLC	By Contractor		
P-00-YA-1065B	DSDI	EtherNet / IP	RO CIP Pump E-Stop Alarm	I-106	CASSF Main PLC	By Contractor		
P-00-YL-1065B	DSDI	EtherNet / IP	RO CIP Pump Run Status	I-106	CASSF Main PLC	By Contractor		
P-00-ZL-1065A	DSDI	EtherNet / IP	RO CIP Pump Ready Status	I-106	CASSF Main PLC	By Contractor		
P-00-HS-1077	DO	120VAC	3 Stage RO Pilot (Murray Train) To RO Flush Tank Inlet Control Valve Open/Close Command	I-107	CASSF Main PLC	By Contractor		
P-00-HS-1078	DO	120VAC	3 Stage RO Pilot (San Vicente Train) To RO Flush Tank Inlet Control Valve Open/Close Command	I-107	CASSF Main PLC	By Contractor		
P-00-HS-1080	DO	120VAC	CIP Fill Pump Start/Stop Command	I-107	CASSF Main PLC	By Contractor		
P-00-HS-1085	DSDO	EtherNet / IP	RO Flush Pump Start/Stop Command	I-107	CASSF Main PLC	By Contractor		
P-00-II-1085	DSAI	EtherNet / IP	RO Flush Pump Current Indicator	I-107	CASSF Main PLC	By Contractor		
P-00-LIT-1075	AI	4-20mA	RO Flush Tank Level Indicating Transmitter	I-107	CASSF Main PLC	By Contractor		
P-00-PAH-1080	DI	24VDC	CIP Fill Pump Discharge Pressure Alarm High	I-107	CASSF Main PLC	By Contractor		
P-00-PAH-1085	DSDI	EtherNet / IP	RO Flush Pump Discharge Pressure Alarm High	I-107	CASSF Main PLC	By Contractor		
P-00-SI-1085	DSAI	EtherNet / IP	RO Flush Pump Speed Indicator	I-107	CASSF Main PLC	By Contractor		
P-00-SK-1085	DSAO	EtherNet / IP	RO Flush Pump Speed Setpoint	I-107	CASSF Main PLC	By Contractor		
P-00-TAH-1080	DI	24VDC	CIP Fill Pump Temperature Alarm High	I-107	CASSF Main PLC	By Contractor		
P-00-TAH-1085	DSDI	EtherNet / IP	RO Flush Pump Temperature Alarm High	I-107	CASSF Main PLC	By Contractor		
P-00-YA-1077	DI	24VDC	3 Stage RO Pilot (Murray Train) To RO Flush Tank Inlet Control Valve Fail Alarm	I-107	CASSF Main PLC	By Contractor		
P-00-YA-1078	DI	24VDC	3 Stage RO Pilot (San Vicente Train) To RO Flush Tank Inlet Control Valve Fail Alarm	I-107	CASSF Main PLC	By Contractor		
P-00-YA-1080	DI	24VDC	CIP Fill Pump Fail Alarm	I-107	CASSF Main PLC	By Contractor		
P-00-YA-1080A	DI	24VDC	CIP Fill Pump E-Stop Alarm	I-107	CASSF Main PLC	By Contractor		
P-00-YA-1085A	DSDI	EtherNet / IP	RO Flush Pump Fail Alarm	I-107	CASSF Main PLC	By Contractor		
P-00-YA-1085B	DSDI	EtherNet / IP	RO Flush Pump E-Stop Alarm	I-107	CASSF Main PLC	By Contractor		
P-00-YL-1080	DI	24VDC	CIP Fill Pump Run Status	I-107	CASSF Main PLC	By Contractor		
P-00-YL-1085B	DSDI	EtherNet / IP	RO Flush Pump Run Status	I-107	CASSF Main PLC	By Contractor		
P-00-ZL-1077	DI	24VDC	3 Stage RO Pilot (Murray Train) To RO Flush Tank Inlet Control Valve Ready Status	I-107	CASSF Main PLC	By Contractor		
P-00-ZL-1078	DI	24VDC	3 Stage RO Pilot (San Vicente Train) To RO Flush Tank Inlet Control Valve Ready Status	I-107	CASSF Main PLC	By Contractor		
P-00-ZL-1080A	DI	24VDC	CIP Fill Pump Ready Status	I-107	CASSF Main PLC	By Contractor		
P-00-ZL-1085A	DSDI	EtherNet / IP	RO Flush Pump Ready Status	I-107	CASSF Main PLC	By Contractor		
P-00-ZLC-1077	DI	24VDC	3 Stage RO Pilot (Murray Train) To RO Flush Tank Inlet Control Valve Closed Position Status	I-107	CASSF Main PLC	By Contractor		
P-00-ZLC-1078	DI	24VDC	3 Stage RO Pilot (San Vicente Train) To RO Flush Tank Inlet Control Valve Closed Position Status	I-107	CASSF Main PLC	By Contractor		
P-00-ZLO-1077	DI	24VDC	3 Stage RO Pilot (Murray Train) To RO Flush Tank Inlet Control Valve Open Position Status	I-107	CASSF Main PLC	By Contractor		
P-00-ZLO-1078	DI	24VDC	3 Stage RO Pilot (San Vicente Train) To RO Flush Tank Inlet Control Valve Open Position Status	I-107	CASSF Main PLC	By Contractor		
P-00-AIT-1075	AI	4-20mA	San Vicente Combined Permeate Nitrate Analyzer Panel NO2/NO3 Analyzer Indicating Transmitter	I-108	CASSF Main PLC	By Contractor		
P-00-AIT-1076	AI	4-20mA	Murray Combined Permeate Nitrate Analyzer Panel NO2/NO3 Analyzer Indicating Transmitter	I-108	CASSF Main PLC	By Contractor		
P-00-AIT-1110	AI	4-20mA	UV System VOC Analyzer Panel VOC Analyzer Indicating Transmitter	I-108	CASSF Main PLC	By Contractor		
P-00-AIT-986	AI	4-20mA	To CCRO Permeate Analyzer Panel Conductivity Analyzer Indicating Transmitter	I-108	CASSF Main PLC	By Contractor		

P-00-AIT-987	AI	4-20mA	To CCRO Permeate Analyzer Panel TOC Analyzer Indicating Transmitter	I-108	CASSF Main PLC	By Contractor		
P-00-FSL-1075	DI	24VDC	San Vicente Combined Permeate Nitrate Analyzer Panel Sample Inlet Low Flow Alarm	I-108	CASSF Main PLC	By Contractor		
P-00-FSL-1076	DI	24VDC	Murray Combined Permeate Nitrate Analyzer Panel Sample Inlet Low Flow Alarm	I-108	CASSF Main PLC	By Contractor		
P-00-FSL-1110	DI	24VDC	UV System VOC Analyzer Panel Sample Inlet Low Flow Alarm	I-108	CASSF Main PLC	By Contractor		
P-00-FSL-986	DI	24VDC	To CCRO Permeate Analyzer Panel Sample Inlet Low Flow Alarm	I-108	CASSF Main PLC	By Contractor		
P-00-AIT-1109	AI	4-20mA	UV-AOP Reactor No 1 Discharge UVT Analyzer Indicating Transmitter	I-111	CASSF Main PLC	By Contractor		
P-00-AIT-1129	AI	4-20mA	UV-AOP Reactor No 2 Discharge UVT Analyzer Indicating Transmitter	I-112	CASSF Main PLC	By Contractor		
P-00-FAL-1210	DI	24VDC	ROP Carrier Water Pump No 1 Discharge Low Flow Alarm	I-121	CASSF Main PLC	By Contractor		
P-00-HS-1210	DO	120VAC	ROP Carrier Water Pump No 1 Start/Stop Command	I-121	CASSF Main PLC	By Contractor		
P-00-LIT-1200	AI	4-20mA	PFC Carrier Water Tank Level Indicating Transmitter	I-121	CASSF Main PLC	By Contractor		
P-00-YA-1210	DI	24VDC	ROP Carrier Water Pump No 1 Fail Alarm	I-121	CASSF Main PLC	By Contractor		
P-00-YL-1210	DI	24VDC	ROP Carrier Water Pump No 1 Run Status	I-121	CASSF Main PLC	By Contractor		
P-00-ZL-1210A	DI	24VDC	ROP Carrier Water Pump No 1 Ready Status	I-121	CASSF Main PLC	By Contractor		
P-00-FAL-1220	DI	24VDC	ROP Carrier Water Pump No 2 Low Flow Alarm	I-122	CASSF Main PLC	By Contractor		
P-00-HS-1220	DO	120VAC	ROP Carrier Water Pump No 2 Start/Stop Command	I-122	CASSF Main PLC	By Contractor		
P-00-YA-1220	DI	24VDC	ROP Carrier Water Pump No 2 Fail Alarm	I-122	CASSF Main PLC	By Contractor		
P-00-YL-1220	DI	24VDC	ROP Carrier Water Pump No 2 Run Status	I-122	CASSF Main PLC	By Contractor		
P-00-ZL-1220A	DI	24VDC	ROP Carrier Water Pump No 2 Ready Status	I-122	CASSF Main PLC	By Contractor		
P-00-FAL-1230	DI	24VDC	ROP Carrier Water Pump No 3 Discharge Low Flow Alarm	I-123	CASSF Main PLC	By Contractor		
P-00-HS-1230	DO	120VAC	ROP Carrier Water Pump No 3 Start/Stop Command	I-123	CASSF Main PLC	By Contractor		
P-00-YA-1230	DI	24VDC	ROP Carrier Water Pump No 3 Fail Alarm	I-123	CASSF Main PLC	By Contractor		
P-00-YL-1230	DI	24VDC	ROP Carrier Water Pump No 3 Run Status	I-123	CASSF Main PLC	By Contractor		
P-00-ZL-1230A	DI	24VDC	ROP Carrier Water Pump No 3 Ready Status	I-123	CASSF Main PLC	By Contractor		
P-00-HS-1310	DO	120VAC	Acetic Acid Dosing Pump No 1 Start/Stop Command	I-131	CASSF Main PLC	By Contractor		
P-00-HS-1315	DO	120VAC	Acetic Acid Dosing Pump No 2 Start/Stop Command	I-131	CASSF Main PLC	By Contractor		
P-00-LAHH-1300	DO	120VAC	Acetic Acid Storage Tank Overflow Alarm To Fill Staion LCP	I-131	CASSF Main PLC	By Contractor		
P-00-LI-1300	AO	4-20mA	Acetic Acid Storage Tank Level Indication To Fill Station LCP	I-131	CASSF Main PLC	By Contractor		
P-00-LIT-1300	AI	4-20mA	Acetic Acid Storage Tank Level Indicating Transmitter	I-131	CASSF Main PLC	By Contractor		
P-00-LSH-1300	DI	24VDC	Acetic Acid Storage Tank Interstitial Leak Alarm	I-131	CASSF Main PLC	By Contractor		
P-00-LSH-1301	DI	24VDC	Acetic Acid Storage And Dosing Containment Area Leak Alarm	I-131	CASSF Main PLC	By Contractor		
P-00-LSHH-1300	DI	24VDC	Acetic Acid Storage Tank Level Alarm High High	I-131	CASSF Main PLC	By Contractor		
P-00-PSH-1310	DI	24VDC	Acetic Acid Dosing Pump No 1 Discharge Pressure Alarm High	I-131	CASSF Main PLC	By Contractor		
P-00-PSH-1315	DI	24VDC	Acetic Acid Dosing Pump No 2 Discharge Pressure Alarm High	I-131	CASSF Main PLC	By Contractor		
P-00-SC-1310	AO	4-20mA	Acetic Acid Dosing Pump No 1 Speed Setpoint	I-131	CASSF Main PLC	By Contractor		
P-00-SC-1315	AO	4-20mA	Acetic Acid Dosing Pump No 2 Speed Setpoint	I-131	CASSF Main PLC	By Contractor		
P-00-SI-1310	AI	4-20mA	Acetic Acid Dosing Pump No 1 Speed Indicator	I-131	CASSF Main PLC	By Contractor		
P-00-SI-1315	AI	4-20mA	Acetic Acid Dosing Pump No 2 Speed Indicator	I-131	CASSF Main PLC	By Contractor		
P-00-XS-1310	DI	24VDC	Acetic Acid Dosing Pump No 1 Leak Alarm	I-131	CASSF Main PLC	By Contractor		
P-00-XS-1315	DI	24VDC	Acetic Acid Dosing Pump No 2 Leak Alarm	I-131	CASSF Main PLC	By Contractor		
P-00-YA-1310	DI	24VDC	Acetic Acid Dosing Pump No 1 Fail Alarm	I-131	CASSF Main PLC	By Contractor		
P-00-YA-1315	DI	24VDC	Acetic Acid Dosing Pump No 2 Fail Alarm	I-131	CASSF Main PLC	By Contractor		
P-00-YL-1310B	DI	24VDC	Acetic Acid Dosing Pump No 1 Run Status	I-131	CASSF Main PLC	By Contractor		
P-00-YL-1315B	DI	24VDC	Acetic Acid Dosing Pump No 2 Run Status Indication	I-131	CASSF Main PLC	By Contractor		
P-00-ZL-1310A	DI	24VDC	Acetic Acid Dosing Pump No 1 Ready Status	I-131	CASSF Main PLC	By Contractor		
P-00-ZL-1315A	DI	24VDC	Acetic Acid Dosing Pump No 2 Ready Status	I-131	CASSF Main PLC	By Contractor		
P-00-LAHH-1320	DO	120VAC	Liquid Ammonium Sulfate Storage Tank Overflow Alarm To Fill Station LCP	I-136	CASSF Main PLC	By Contractor		
P-00-LI-1320	AO	4-20mA	Liquid Ammonium Sulfate Storage Tank Level Indication To Fill Staion LCP	I-136	CASSF Main PLC	By Contractor		
P-00-LIT-1320	AI	4-20mA	Liquid Ammonium Sulfate Storage Tank Level Indicating Transmitter	I-136	CASSF Main PLC	By Contractor		
P-00-LSH-1320	DI	24VDC	Liquid Ammonium Sulfate Storage Tank Interstitial Leak Alarm	I-136	CASSF Main PLC	By Contractor		
P-00-LSH-1321	DI	24VDC	Liquid Ammonium Sulfate Storage Tank Containment Area Leak Alarm	I-136	CASSF Main PLC	By Contractor		
P-00-LSHH-1320	DI	24VDC	Liquid Ammonium Sulfate Storage Tank Level Alarm High High	I-136	CASSF Main PLC	By Contractor		
P-00-HS-1340	DO	120VAC	Liquid Ammonium Dosing Pump No 1 Start/Stop Command	I-137	CASSF Main PLC	By Contractor		
P-00-HS-1345	DO	120VAC	Liquid Ammonium Dosing Pump No 2 Start/Stop Command	I-137	CASSF Main PLC	By Contractor		
P-00-HS-1350	DO	120VAC	Liquid Ammonium Dosing Pump No 3 Start/Stop Command	I-137	CASSF Main PLC	By Contractor		
P-00-HS-1355	DO	120VAC	Liquid Ammonium Dosing Pump No 4 Start/Stop Command	I-137	CASSF Main PLC	By Contractor		
P-00-PSH-1340	DI	24VDC	Liquid Ammonium Dosing Pump No 1 Discharge Pressure Alarm High	I-137	CASSF Main PLC	By Contractor		

P-00-PSH-1345	DI	24VDC	Liquid Ammonium Dosing Pump No 2 Discharge Pressure Alarm High	I-137	CASSF Main PLC	By Contractor		
P-00-PSH-1350	DI	24VDC	Liquid Ammonium Dosing Pump No 3 Discharge Pressure Alarm High	I-137	CASSF Main PLC	By Contractor		
P-00-PSH-1355	DI	24VDC	Liquid Ammonium Dosing Pump No 4 Discharge Pressure Alarm High	I-137	CASSF Main PLC	By Contractor		
P-00-SC-1340	AO	4-20mA	Liquid Ammonium Dosing Pump No 1 Speed Setpoint	I-137	CASSF Main PLC	By Contractor		
P-00-SC-1345	AO	4-20mA	Liquid Ammonium Dosing Pump No 2 Speed Setpoint	I-137	CASSF Main PLC	By Contractor		
P-00-SC-1350	AO	4-20mA	Liquid Ammonium Dosing Pump No 3 Speed Setpoint	I-137	CASSF Main PLC	By Contractor		
P-00-SC-1355	AO	4-20mA	Liquid Ammonium Dosing Pump No 4 Speed Setpoint	I-137	CASSF Main PLC	By Contractor		
P-00-SI-1340	AI	4-20mA	Liquid Ammonium Dosing Pump No 1 Speed Indicator	I-137	CASSF Main PLC	By Contractor		
P-00-SI-1345	AI	4-20mA	Liquid Ammonium Dosing Pump No 2 Speed Indicator	I-137	CASSF Main PLC	By Contractor		
P-00-SI-1350	AI	4-20mA	Liquid Ammonium Dosing Pump No 3 Speed Indicator	I-137	CASSF Main PLC	By Contractor		
P-00-SI-1355	AI	4-20mA	Liquid Ammonium Dosing Pump No 4 Speed Indicator	I-137	CASSF Main PLC	By Contractor		
P-00-XS-1340	DI	24VDC	Liquid Ammonium Dosing Pump No 1 Leak Alarm	I-137	CASSF Main PLC	By Contractor		
P-00-XS-1345	DI	24VDC	Liquid Ammonium Dosing Pump No 2 Leak Alarm	I-137	CASSF Main PLC	By Contractor		
P-00-XS-1350	DI	24VDC	Liquid Ammonium Dosing Pump No 3 Leak Alarm	I-137	CASSF Main PLC	By Contractor		
P-00-XS-1355	DI	24VDC	Liquid Ammonium Dosing Pump No 4 Leak Alarm	I-137	CASSF Main PLC	By Contractor		
P-00-YA-1340	DI	24VDC	Liquid Ammonium Dosing Pump No 1 Fail Alarm	I-137	CASSF Main PLC	By Contractor		
P-00-YA-1345	DI	24VDC	Liquid Ammonium Dosing Pump No 2 Fail Alarm	I-137	CASSF Main PLC	By Contractor		
P-00-YA-1350	DI	24VDC	Liquid Ammonium Dosing Pump No 3 Fail Alarm	I-137	CASSF Main PLC	By Contractor		
P-00-YA-1355	DI	24VDC	Liquid Ammonium Dosing Pump No 4 Fail Alarm	I-137	CASSF Main PLC	By Contractor		
P-00-YL-1340B	DI	24VDC	Liquid Ammonium Dosing Pump No 1 Run Status	I-137	CASSF Main PLC	By Contractor		
P-00-YL-1345B	DI	24VDC	Liquid Ammonium Dosing Pump No 2 Run Status	I-137	CASSF Main PLC	By Contractor		
P-00-YL-1350B	DI	24VDC	Liquid Ammonium Dosing Pump No 3 Run Status Indication	I-137	CASSF Main PLC	By Contractor		
P-00-YL-1355B	DI	24VDC	Liquid Ammonium Dosing Pump No 4 Run Status Indication	I-137	CASSF Main PLC	By Contractor		
P-00-ZL-1340A	DI	24VDC	Liquid Ammonium Dosing Pump No 1 Ready Status	I-137	CASSF Main PLC	By Contractor		
P-00-ZL-1345A	DI	24VDC	Liquid Ammonium Dosing Pump No 2 Ready Status	I-137	CASSF Main PLC	By Contractor		
P-00-ZL-1350A	DI	24VDC	Liquid Ammonium Dosing Pump No 3 Ready Status	I-137	CASSF Main PLC	By Contractor		
P-00-ZL-1355A	DI	24VDC	Liquid Ammonium Dosing Pump No 4 Ready Status	I-137	CASSF Main PLC	By Contractor		
P-00-HS-1365	DO	120VAC	Liquid Ammonium Dosing Pump No 5 Start/Stop Command	I-138	CASSF Main PLC	By Contractor		
P-00-PSH-1365	DI	24VDC	Liquid Ammonium Dosing Pump No 5 Discharge Pressure Alarm High	I-138	CASSF Main PLC	By Contractor		
P-00-SC-1365	AO	4-20mA	Liquid Ammonium Dosing Pump No 5 Speed Setpoint	I-138	CASSF Main PLC	By Contractor		
P-00-SI-1365	AI	4-20mA	Liquid Ammonium Dosing Pump No 5 Speed Indicator	I-138	CASSF Main PLC	By Contractor		
P-00-XS-1365	DI	24VDC	Liquid Ammonium Dosing Pump No 5 Leak Alarm	I-138	CASSF Main PLC	By Contractor		
P-00-YA-1365	DI	24VDC	Liquid Ammonium Dosing Pump No 5 Fail Alarm	I-138	CASSF Main PLC	By Contractor		
P-00-YL-1365B	DI	24VDC	Liquid Ammonium Dosing Pump No 5 Run Status Indication	I-138	CASSF Main PLC	By Contractor		
P-00-ZL-1365A	DI	24VDC	Liquid Ammonium Dosing Pump No 5 Ready Status	I-138	CASSF Main PLC	By Contractor		
P-00-LAHH-1400	DO	120VAC	Sodium Hypochlorite Storage Tank Overflow Alarm To Fill Station LCP	I-141	CASSF Main PLC	By Contractor		
P-00-LI-1400	AO	4-20mA	Sodium Hypochlorite Storage Tank Level Indication To Fill Station LCP	I-141	CASSF Main PLC	By Contractor		
P-00-LIT-1400	AI	4-20mA	Sodium Hypochlorite Storage Tank Level Indicating Transmitter	I-141	CASSF Main PLC	By Contractor		
P-00-LSH-1400	DI	24VDC	Sodium Hypochlorite Storage Tank Interstitial Leak Alarm	I-141	CASSF Main PLC	By Contractor		
P-00-LSH-1401	DI	24VDC	Sodium Hypochlorite Storage Tank Containment Area Leak Alarm	I-141	CASSF Main PLC	By Contractor		
P-00-LSHH-1400	DI	24VDC	Sodium Hypochlorite Storage Tank Level Alarm High High	I-141	CASSF Main PLC	By Contractor		
P-00-HS-1404	DO	120VAC	Sodium Hypochlorite Dosing Pump No 1 Start/Stop Command	I-142	CASSF Main PLC	By Contractor		
P-00-HS-1405	DO	120VAC	Sodium Hypochlorite Dosing Pump No 2 Start/Stop Command	I-142	CASSF Main PLC	By Contractor		
P-00-PSH-1404	DI	24VDC	Sodium Hypochlorite Dosing Pump No 1 Discharge Pressure Alarm High	I-142	CASSF Main PLC	By Contractor		
P-00-PSH-1405	DI	24VDC	Sodium Hypochlorite Dosing Pump No 2 Discharge Pressure Alarm High	I-142	CASSF Main PLC	By Contractor		
P-00-SC-1404	AO	4-20mA	Sodium Hypochlorite Dosing Pump No 1 Speed Setpoint	I-142	CASSF Main PLC	By Contractor		
P-00-SC-1405	AO	4-20mA	Sodium Hypochlorite Dosing Pump No 2 Speed Setpoint	I-142	CASSF Main PLC	By Contractor		
P-00-SI-1404	AI	4-20mA	Sodium Hypochlorite Dosing Pump No 1 Speed Indicator	I-142	CASSF Main PLC	By Contractor		
P-00-SI-1405	AI	4-20mA	Sodium Hypochlorite Dosing Pump No 2 Speed Indicator	I-142	CASSF Main PLC	By Contractor		
P-00-XS-1404	DI	24VDC	Sodium Hypochlorite Dosing Pump No 1 Leak Alarm	I-142	CASSF Main PLC	By Contractor		
P-00-XS-1405	DI	24VDC	Sodium Hypochlorite Dosing Pump No 2 Leak Alarm	I-142	CASSF Main PLC	By Contractor		
P-00-YA-1404	DI	24VDC	Sodium Hypochlorite Dosing Pump No 1 Fail Alarm	I-142	CASSF Main PLC	By Contractor		
P-00-YA-1405	DI	24VDC	Sodium Hypochlorite Dosing Pump No 2 Fail Alarm	I-142	CASSF Main PLC	By Contractor		
P-00-YL-1404B	DI	24VDC	Sodium Hypochlorite Dosing Pump No 1 Run Status	I-142	CASSF Main PLC	By Contractor		
P-00-YL-1405B	DI	24VDC	Sodium Hypochlorite Dosing Pump No 2 Run Status	I-142	CASSF Main PLC	By Contractor		
P-00-ZL-1404A	DI	24VDC	Sodium Hypochlorite Dosing Pump No 1 Ready Status	I-142	CASSF Main PLC	By Contractor		

P-00-ZL-1405A	DI	24VDC	Sodium Hypochlorite Dosing Pump No 2 Ready Status	I-142	CASSF Main PLC	By Contractor		
P-00-HS-1421	DO	120VAC	Sodium Hypochlorite Dosing Pump No 3 Start/Stop Command	I-143	CASSF Main PLC	By Contractor		
P-00-HS-1422	DO	120VAC	Sodium Hypochlorite Dosing Pump No 4 Start/Stop Command	I-143	CASSF Main PLC	By Contractor		
P-00-HS-1423	DO	120VAC	Sodium Hypochlorite Dosing Pump No 5 Start/Stop Command	I-143	CASSF Main PLC	By Contractor		
P-00-HS-1424	DO	120VAC	Sodium Hypochlorite Dosing Pump No 6 Start/Stop Command	I-143	CASSF Main PLC	By Contractor		
P-00-PSH-1421	DI	24VDC	Sodium Hypochlorite Dosing Pump No 3 Discharge Pressure Alarm High	I-143	CASSF Main PLC	By Contractor		
P-00-PSH-1422	DI	24VDC	Sodium Hypochlorite Dosing Pump No 4 Discharge Pressure Alarm High	I-143	CASSF Main PLC	By Contractor		
P-00-PSH-1423	DI	24VDC	Sodium Hypochlorite Dosing Pump No 5 Discharge Pressure Alarm High	I-143	CASSF Main PLC	By Contractor		
P-00-PSH-1424	DI	24VDC	Sodium Hypochlorite Dosing Pump No 6 Discharge Pressure Alarm High	I-143	CASSF Main PLC	By Contractor		
P-00-SC-1421	AO	4-20mA	Sodium Hypochlorite Dosing Pump No 3 Speed Setpoint	I-143	CASSF Main PLC	By Contractor		
P-00-SC-1422	AO	4-20mA	Sodium Hypochlorite Dosing Pump No 4 Speed Setpoint	I-143	CASSF Main PLC	By Contractor		
P-00-SC-1423	AO	4-20mA	Sodium Hypochlorite Dosing Pump No 5 Speed Setpoint	I-143	CASSF Main PLC	By Contractor		
P-00-SC-1424	AO	4-20mA	Sodium Hypochlorite Dosing Pump No 6 Speed Setpoint	I-143	CASSF Main PLC	By Contractor		
P-00-SI-1421	AI	4-20mA	Sodium Hypochlorite Dosing Pump No 3 Speed Indicator	I-143	CASSF Main PLC	By Contractor		
P-00-SI-1422	AI	4-20mA	Sodium Hypochlorite Dosing Pump No 4 Speed Indicator	I-143	CASSF Main PLC	By Contractor		
P-00-SI-1423	AI	4-20mA	Sodium Hypochlorite Dosing Pump No 5 Speed Indicator	I-143	CASSF Main PLC	By Contractor		
P-00-SI-1424	AI	4-20mA	Sodium Hypochlorite Dosing Pump No 6 Speed Indicator	I-143	CASSF Main PLC	By Contractor		
P-00-XS-1421	DI	24VDC	Sodium Hypochlorite Dosing Pump No 3 Leak Alarm	I-143	CASSF Main PLC	By Contractor		
P-00-XS-1422	DI	24VDC	Sodium Hypochlorite Dosing Pump No 4 Leak Alarm	I-143	CASSF Main PLC	By Contractor		
P-00-XS-1423	DI	24VDC	Sodium Hypochlorite Dosing Pump No 5 Leak Alarm	I-143	CASSF Main PLC	By Contractor		
P-00-XS-1424	DI	24VDC	Sodium Hypochlorite Dosing Pump No 6 Leak Alarm	I-143	CASSF Main PLC	By Contractor		
P-00-YA-1421	DI	24VDC	Sodium Hypochlorite Dosing Pump No 3 Fail Alarm	I-143	CASSF Main PLC	By Contractor		
P-00-YA-1422	DI	24VDC	Sodium Hypochlorite Dosing Pump No 4 Fail Alarm	I-143	CASSF Main PLC	By Contractor		
P-00-YA-1423	DI	24VDC	Sodium Hypochlorite Dosing Pump No 5 Fail Alarm	I-143	CASSF Main PLC	By Contractor		
P-00-YA-1424	DI	24VDC	Sodium Hypochlorite Dosing Pump No 6 Fail Alarm	I-143	CASSF Main PLC	By Contractor		
P-00-YL-1421B	DI	24VDC	Sodium Hypochlorite Dosing Pump No 3 Run Status	I-143	CASSF Main PLC	By Contractor		
P-00-YL-1422B	DI	24VDC	Sodium Hypochlorite Dosing Pump No 4 Run Status	I-143	CASSF Main PLC	By Contractor		
P-00-YL-1423B	DI	24VDC	Sodium Hypochlorite Dosing Pump No 5 Run Status Indication	I-143	CASSF Main PLC	By Contractor		
P-00-YL-1424B	DI	24VDC	Sodium Hypochlorite Dosing Pump No 6 Run Status	I-143	CASSF Main PLC	By Contractor		
P-00-ZL-1421A	DI	24VDC	Sodium Hypochlorite Dosing Pump No 3 Ready Status	I-143	CASSF Main PLC	By Contractor		
P-00-ZL-1422A	DI	24VDC	Sodium Hypochlorite Dosing Pump No 4 Ready Status	I-143	CASSF Main PLC	By Contractor		
P-00-ZL-1423A	DI	24VDC	Sodium Hypochlorite Dosing Pump No 5 Ready Status	I-143	CASSF Main PLC	By Contractor		
P-00-ZL-1424A	DI	24VDC	Sodium Hypochlorite Dosing Pump No 6 Ready Status	I-143	CASSF Main PLC	By Contractor		
P-00-HS-1425	DO	120VAC	Sodium Hypochlorite Dosing Pump No 7 Start/Stop Command	I-144	CASSF Main PLC	By Contractor		
P-00-HS-1426	DO	120VAC	Sodium Hypochlorite Dosing Pump No 8 Start/Stop Command	I-144	CASSF Main PLC	By Contractor		
P-00-HS-1427	DO	120VAC	Sodium Hypochlorite Dosing Pump No 9 Start/Stop Command	I-144	CASSF Main PLC	By Contractor		
P-00-HS-1428	DO	120VAC	Sodium Hypochlorite Dosing Pump No 10 Start/Stop Command	I-144	CASSF Main PLC	By Contractor		
P-00-PSH-1425	DI	24VDC	Sodium Hypochlorite Dosing Pump No 7 Discharge Pressure Alarm High	I-144	CASSF Main PLC	By Contractor		
P-00-PSH-1426	DI	24VDC	Sodium Hypochlorite Dosing Pump No 8 Discharge Pressure Alarm High	I-144	CASSF Main PLC	By Contractor		
P-00-PSH-1427	DI	24VDC	Sodium Hypochlorite Dosing Pump No 9 Discharge Pressure Alarm High	I-144	CASSF Main PLC	By Contractor		
P-00-PSH-1428	DI	24VDC	Sodium Hypochlorite Dosing Pump No 10 Discharge Pressure Alarm High	I-144	CASSF Main PLC	By Contractor		
P-00-SC-1425	AO	4-20mA	Sodium Hypochlorite Dosing Pump No 7 Speed Setpoint	I-144	CASSF Main PLC	By Contractor		
P-00-SC-1426	AO	4-20mA	Sodium Hypochlorite Dosing Pump No 8 Speed Setpoint	I-144	CASSF Main PLC	By Contractor		
P-00-SC-1427	AO	4-20mA	Sodium Hypochlorite Dosing Pump No 9 Speed Setpoint	I-144	CASSF Main PLC	By Contractor		
P-00-SC-1428	AO	4-20mA	Sodium Hypochlorite Dosing Pump No 10 Speed Setpoint	I-144	CASSF Main PLC	By Contractor		
P-00-SI-1425	AI	4-20mA	Sodium Hypochlorite Dosing Pump No 7 Speed Indicator	I-144	CASSF Main PLC	By Contractor		
P-00-SI-1426	AI	4-20mA	Sodium Hypochlorite Dosing Pump No 8 Speed Indicator	I-144	CASSF Main PLC	By Contractor		
P-00-SI-1427	AI	4-20mA	Sodium Hypochlorite Dosing Pump No 9 Speed Indicator	I-144	CASSF Main PLC	By Contractor		
P-00-SI-1428	AI	4-20mA	Sodium Hypochlorite Dosing Pump No 10 Speed Indicator	I-144	CASSF Main PLC	By Contractor		
P-00-XS-1425	DI	24VDC	Sodium Hypochlorite Dosing Pump No 7 Leak Alarm	I-144	CASSF Main PLC	By Contractor		
P-00-XS-1426	DI	24VDC	Sodium Hypochlorite Dosing Pump No 8 Leak Alarm	I-144	CASSF Main PLC	By Contractor		
P-00-XS-1427	DI	24VDC	Sodium Hypochlorite Dosing Pump No 9 Leak Alarm	I-144	CASSF Main PLC	By Contractor		
P-00-XS-1428	DI	24VDC	Sodium Hypochlorite Dosing Pump No 10 Leak Alarm	I-144	CASSF Main PLC	By Contractor		
P-00-YA-1425	DI	24VDC	Sodium Hypochlorite Dosing Pump No 7 Fail Alarm	I-144	CASSF Main PLC	By Contractor		
P-00-YA-1426	DI	24VDC	Sodium Hypochlorite Dosing Pump No 8 Fail Alarm	I-144	CASSF Main PLC	By Contractor		
P-00-YA-1427	DI	24VDC	Sodium Hypochlorite Dosing Pump No 9 Fail Alarm	I-144	CASSF Main PLC	By Contractor		

P-00-YA-1428	DI	24VDC	Sodium Hypochlorite Dosing Pump No 10 Fail Alarm	I-144	CASSF Main PLC	By Contractor		
P-00-YL-1425B	DI	24VDC	Sodium Hypochlorite Dosing Pump No 7 Run Status	I-144	CASSF Main PLC	By Contractor		
P-00-YL-1426B	DI	24VDC	Sodium Hypochlorite Dosing Pump No 8 Run Status	I-144	CASSF Main PLC	By Contractor		
P-00-YL-1427B	DI	24VDC	Sodium Hypochlorite Dosing Pump No 9 Run Status	I-144	CASSF Main PLC	By Contractor		
P-00-YL-1428B	DI	24VDC	Sodium Hypochlorite Dosing Pump No 10 Run Status	I-144	CASSF Main PLC	By Contractor		
P-00-ZL-1425A	DI	24VDC	Sodium Hypochlorite Dosing Pump No 7 Ready Status	I-144	CASSF Main PLC	By Contractor		
P-00-ZL-1426A	DI	24VDC	Sodium Hypochlorite Dosing Pump No 8 Ready Status	I-144	CASSF Main PLC	By Contractor		
P-00-ZL-1427A	DI	24VDC	Sodium Hypochlorite Dosing Pump No 9 Ready Status	I-144	CASSF Main PLC	By Contractor		
P-00-ZL-1428A	DI	24VDC	Sodium Hypochlorite Dosing Pump No 10 Ready Status	I-144	CASSF Main PLC	By Contractor		
P-00-HS-1441	DO	120VAC	Sulfuric Acid Dosing Pump No 1 Start/Stop Command	I-146	CASSF Main PLC	By Contractor		
P-00-LAHH-1440	DO	120VAC	Sulfuric Acid Storage Tank Overflow Alarm To Fill Station LCP	I-146	CASSF Main PLC	By Contractor		
P-00-LI-1440	AO	4-20mA	Sulfuric Acid Storage Tank Level Indication To Fill Station LCP	I-146	CASSF Main PLC	By Contractor		
P-00-LIT-1440	AI	4-20mA	Sulfuric Acid Storage Tank Level Indicating Transmitter	I-146	CASSF Main PLC	By Contractor		
P-00-LSH-1440	DI	24VDC	Sulfuric Acid Storage Tank Interstitial Leak Alarm	I-146	CASSF Main PLC	By Contractor		
P-00-LSH-1441	DI	24VDC	Sulfuric Acid Storage Tank And Dosing Pumps Containment Area Leak Alarm	I-146	CASSF Main PLC	By Contractor		
P-00-LSHH-1440	DI	24VDC	Sulfuric Acid Storage Tank Level Alarm High High	I-146	CASSF Main PLC	By Contractor		
P-00-PSH-1441	DI	24VDC	Sulfuric Acid Dosing Pump No 1 Discharge Pressure Alarm High	I-146	CASSF Main PLC	By Contractor		
P-00-SC-1441	AO	4-20mA	Sulfuric Acid Dosing Pump No 1 Speed Setpoint	I-146	CASSF Main PLC	By Contractor		
P-00-SI-1441	AI	4-20mA	Sulfuric Acid Dosing Pump No 1 Speed Indicator	I-146	CASSF Main PLC	By Contractor		
P-00-XS-1441	DI	24VDC	Sulfuric Acid Dosing Pump No 1 Leak Alarm	I-146	CASSF Main PLC	By Contractor		
P-00-YA-1441	DI	24VDC	Sulfuric Acid Dosing Pump No 1 Fail Alarm	I-146	CASSF Main PLC	By Contractor		
P-00-YL-1441B	DI	24VDC	Sulfuric Acid Dosing Pump No 1 Run Status	I-146	CASSF Main PLC	By Contractor		
P-00-ZL-1441A	DI	24VDC	Sulfuric Acid Dosing Pump No 1 Ready Status	I-146	CASSF Main PLC	By Contractor		
P-00-HS-1444	DO	120VAC	Sulfuric Acid Dosing Pump No 2 Start/Stop Command	I-147	CASSF Main PLC	By Contractor		
P-00-PSH-1444	DI	24VDC	Sulfuric Acid Dosing Pump No 2 Discharge Pressure Alarm High	I-147	CASSF Main PLC	By Contractor		
P-00-SC-1444	AO	4-20mA	Sulfuric Acid Dosing Pump No 2 Speed Setpoint	I-147	CASSF Main PLC	By Contractor		
P-00-SI-1444	AI	4-20mA	Sulfuric Acid Dosing Pump No 2 Speed Indicator	I-147	CASSF Main PLC	By Contractor		
P-00-XS-1444	DI	24VDC	Sulfuric Acid Dosing Pump No 2 Leak Alarm	I-147	CASSF Main PLC	By Contractor		
P-00-YA-1444	DI	24VDC	Sulfuric Acid Dosing Pump No 2 Fail Alarm	I-147	CASSF Main PLC	By Contractor		
P-00-YL-1444B	DI	24VDC	Sulfuric Acid Dosing Pump No 2 Run Status	I-147	CASSF Main PLC	By Contractor		
P-00-ZL-1444A	DI	24VDC	Sulfuric Acid Dosing Pump No 2 Ready Status	I-147	CASSF Main PLC	By Contractor		
P-00-HS-1446	DO	120VAC	Sulfuric Acid Dosing Pump No 3 Start/Stop Command	I-148	CASSF Main PLC	By Contractor		
P-00-HS-1447	DO	120VAC	Sulfuric Acid Dosing Pump No 4 Start/Stop Command	I-148	CASSF Main PLC	By Contractor		
P-00-PSH-1446	DI	24VDC	Sulfuric Acid Dosing Pump No 3 Discharge Pressure Alarm High	I-148	CASSF Main PLC	By Contractor		
P-00-PSH-1447	DI	24VDC	Sulfuric Acid Dosing Pump No 4 Discharge Pressure Alarm High	I-148	CASSF Main PLC	By Contractor		
P-00-SC-1446	AO	4-20mA	Sulfuric Acid Dosing Pump No 3 Speed Setpoint	I-148	CASSF Main PLC	By Contractor		
P-00-SC-1447	AO	4-20mA	Sulfuric Acid Dosing Pump No 4 Speed Setpoint	I-148	CASSF Main PLC	By Contractor		
P-00-SI-1446	AI	4-20mA	Sulfuric Acid Dosing Pump No 3 Speed Indicator	I-148	CASSF Main PLC	By Contractor		
P-00-SI-1447	AI	4-20mA	Sulfuric Acid Dosing Pump No 4 Speed Indicator	I-148	CASSF Main PLC	By Contractor		
P-00-XS-1446	DI	24VDC	Sulfuric Acid Dosing Pump No 3 Leak Alarm	I-148	CASSF Main PLC	By Contractor		
P-00-XS-1447	DI	24VDC	Sulfuric Acid Dosing Pump No 4 Leak Alarm	I-148	CASSF Main PLC	By Contractor		
P-00-YA-1446	DI	24VDC	Sulfuric Acid Dosing Pump No 3 Fail Alarm	I-148	CASSF Main PLC	By Contractor		
P-00-YA-1447	DI	24VDC	Sulfuric Acid Dosing Pump No 4 Fail Alarm	I-148	CASSF Main PLC	By Contractor		
P-00-YL-1446B	DI	24VDC	Sulfuric Acid Dosing Pump No 3 Run Status	I-148	CASSF Main PLC	By Contractor		
P-00-YL-1447B	DI	24VDC	Sulfuric Acid Dosing Pump No 4 Run Status	I-148	CASSF Main PLC	By Contractor		
P-00-ZL-1446A	DI	24VDC	Sulfuric Acid Dosing Pump No 3 Ready Status	I-148	CASSF Main PLC	By Contractor		
P-00-ZL-1447A	DI	24VDC	Sulfuric Acid Dosing Pump No 4 Ready Status	I-148	CASSF Main PLC	By Contractor		
P-00-HS-1505	DO	120VAC	Sodium Bisulfite Dosing Pump No 1 Start/Stop Command	I-151	CASSF Main PLC	By Contractor		
P-00-HS-1510	DO	120VAC	Sodium Bisulfite Dosing Pump No 2 Start/Stop Command	I-151	CASSF Main PLC	By Contractor		
P-00-LAHH-1500	DO	120VAC	Sodium Bisulfite Storage Tank Overflow Alarm To Fill Station LCP	I-151	CASSF Main PLC	By Contractor		
P-00-LI-1500	AO	4-20mA	Sodium Bisulfite Storage Tank Level Indication To Fill Station LCP	I-151	CASSF Main PLC	By Contractor		
P-00-LIT-1500	AI	4-20mA	Sodium Bisulfite Storage Tank Level Indicating Transmitter	I-151	CASSF Main PLC	By Contractor		
P-00-LSH-1500	DI	24VDC	Sodium Bisulfite Storage Tank Interstitial Leak Alarm	I-151	CASSF Main PLC	By Contractor		
P-00-LSH-1501	DI	24VDC	Sodium Bisulfite Storage Tank And Dosing Pumps Containment Area Leak Alram	I-151	CASSF Main PLC	By Contractor		
P-00-LSHH-1500	DI	24VDC	Sodium Bisulfite Storage Tank Level Alarm High High	I-151	CASSF Main PLC	By Contractor		
P-00-PSH-1505	DI	24VDC	Sodium Bisulfite Dosing Pump No 1 Discharge Pressure Alarm High	I-151	CASSF Main PLC	By Contractor		

P-00-PSH-1510	DI	24VDC	Sodium Bisulfite Dosing Pump No 2 Discharge Pressure Alarm High	I-151	CASSF Main PLC	By Contractor		
P-00-SC-1505	AO	4-20mA	Sodium Bisulfite Dosing Pump No 1 Speed Setpoint	I-151	CASSF Main PLC	By Contractor		
P-00-SC-1510	AO	4-20mA	Sodium Bisulfite Dosing Pump No 2 Speed Setpoint	I-151	CASSF Main PLC	By Contractor		
P-00-SI-1505	AI	4-20mA	Sodium Bisulfite Dosing Pump No 1 Speed Indicator	I-151	CASSF Main PLC	By Contractor		
P-00-SI-1510	AI	4-20mA	Sodium Bisulfite Dosing Pump No 2 Speed Indicator	I-151	CASSF Main PLC	By Contractor		
P-00-XS-1505	DI	24VDC	Sodium Bisulfite Dosing Pump No 1 Leak Alarm	I-151	CASSF Main PLC	By Contractor		
P-00-XS-1510	DI	24VDC	Sodium Bisulfite Dosing Pump No 2 Leak Alarm	I-151	CASSF Main PLC	By Contractor		
P-00-YA-1505	DI	24VDC	Sodium Bisulfite Dosing Pump No 1 Fail Alarm	I-151	CASSF Main PLC	By Contractor		
P-00-YA-1510	DI	24VDC	Sodium Bisulfite Dosing Pump No 2 Fail Alarm	I-151	CASSF Main PLC	By Contractor		
P-00-YL-1505B	DI	24VDC	Sodium Bisulfite Dosing Pump No 1 Run Status	I-151	CASSF Main PLC	By Contractor		
P-00-YL-1510B	DI	24VDC	Sodium Bisulfite Dosing Pump No 2 Run Status	I-151	CASSF Main PLC	By Contractor		
P-00-ZL-1505A	DI	24VDC	Sodium Bisulfite Dosing Pump No 1 Ready Status	I-151	CASSF Main PLC	By Contractor		
P-00-ZL-1510A	DI	24VDC	Sodium Bisulfite Dosing Pump No 2 Ready Status	I-151	CASSF Main PLC	By Contractor		
P-00-HS-1525	DO	120VAC	Sodium Bisulfite Dosing Pump No 3 Start/Stop Command	I-153	CASSF Main PLC	By Contractor		
P-00-PSH-1525	DI	24VDC	Sodium Bisulfite Dosing Pump No 3 Discharge Pressure Alarm High	I-153	CASSF Main PLC	By Contractor		
P-00-SC-1525	AO	4-20mA	Sodium Bisulfite Dosing Pump No 3 Speed Setpoint	I-153	CASSF Main PLC	By Contractor		
P-00-SI-1525	AI	4-20mA	Sodium Bisulfite Dosing Pump No 3 Speed Indicator	I-153	CASSF Main PLC	By Contractor		
P-00-XS-1525	DI	24VDC	Sodium Bisulfite Dosing Pump No 3 Leak Alarm	I-153	CASSF Main PLC	By Contractor		
P-00-YA-1525	DI	24VDC	Sodium Bisulfite Dosing Pump No 3 Fail Alarm	I-153	CASSF Main PLC	By Contractor		
P-00-YL-1525B	DI	24VDC	Sodium Bisulfite Dosing Pump No 3 Run Status	I-153	CASSF Main PLC	By Contractor		
P-00-ZL-1525A	DI	24VDC	Sodium Bisulfite Dosing Pump No 3 Ready Status	I-153	CASSF Main PLC	By Contractor		
P-00-HS-1545	DO	120VAC	Citric Acid Transfer Pump No 1 Start/Stop Command	I-156	CASSF Main PLC	By Contractor		
P-00-LAHH-1540	DO	120VAC	Citric Acid Storage Tank Overflow Alarm To Fill Station LCP	I-156	CASSF Main PLC	By Contractor		
P-00-LI-1540	AO	4-20mA	Citric Acid Storage Tank Level Indication To Fill Station LCP	I-156	CASSF Main PLC	By Contractor		
P-00-LIT-1540	AI	4-20mA	Citric Acid Storage Tank Level Indicating Transmitter	I-156	CASSF Main PLC	By Contractor		
P-00-LSH-1540	DI	24VDC	Citric Acid Storage Tank Interstitial Leak Alarm	I-156	CASSF Main PLC	By Contractor		
P-00-LSH-1541	DI	24VDC	Citric Acid Storage Tank And Transfer Pumps Containment Area Leak Alarm	I-156	CASSF Main PLC	By Contractor		
P-00-LSHH-1540	DI	24VDC	Citric Acid Storage Tank Level Alarm High High	I-156	CASSF Main PLC	By Contractor		
P-00-PSH-1545	DI	24VDC	Citric Acid Transfer Pump No 1 Discharge Pressure Alarm High	I-156	CASSF Main PLC	By Contractor		
P-00-SC-1545	AO	4-20mA	Citric Acid Transfer Pump No 1 Speed Setpoint	I-156	CASSF Main PLC	By Contractor		
P-00-SI-1545	AI	4-20mA	Citric Acid Transfer Pump No 1 Speed Indicator	I-156	CASSF Main PLC	By Contractor		
P-00-XS-1545	DI	24VDC	Citric Acid Transfer Pump No 1 Leak Alarm	I-156	CASSF Main PLC	By Contractor		
P-00-YA-1545	DI	24VDC	Citric Acid Transfer Pump No 1 Fail Alarm	I-156	CASSF Main PLC	By Contractor		
P-00-YL-1545B	DI	24VDC	Citric Acid Transfer Pump No 1 Run Status	I-156	CASSF Main PLC	By Contractor		
P-00-ZL-1545A	DI	24VDC	Citric Acid Transfer Pump No 1 Ready Status	I-156	CASSF Main PLC	By Contractor		
P-00-HS-1560	DO	120VAC	Citric Acid Dosing Pump No 1 Start/Stop Command	I-157	CASSF Main PLC	By Contractor		
P-00-PSH-1560	DI	24VDC	Citric Acid Dosing Pump No 1 Discharge Pressure Alarm High	I-157	CASSF Main PLC	By Contractor		
P-00-SC-1560	AO	4-20mA	Citric Acid Dosing Pump No 1 Speed Setpoint	I-157	CASSF Main PLC	By Contractor		
P-00-SI-1560	AI	4-20mA	Citric Acid Dosing Pump No 1 Speed Indicator	I-157	CASSF Main PLC	By Contractor		
P-00-XS-1560	DI	24VDC	Citric Acid Dosing Pump No 1 Leak Alarm	I-157	CASSF Main PLC	By Contractor		
P-00-YA-1560	DI	24VDC	Citric Acid Dosing Pump No 1 Fail Alarm	I-157	CASSF Main PLC	By Contractor		
P-00-YL-1560B	DI	24VDC	Citric Acid Dosing Pump No 1 Run Status	I-157	CASSF Main PLC	By Contractor		
P-00-ZL-1560A	DI	24VDC	Citric Acid Dosing Pump No 1 Ready Status	I-157	CASSF Main PLC	By Contractor		
P-00-LAHH-1600	DO	120VAC	Sodium Hydroxide Storage Tank Overflow Alarm To Fill Station LCP	I-161	CASSF Main PLC	By Contractor		
P-00-LI-1600	AO	4-20mA	Sodium Hydroxide Storage Tank Level Indication To Fill Station LCP	I-161	CASSF Main PLC	By Contractor		
P-00-LIT-1600	AI	4-20mA	Sodium Hydroxide Storage Tank Level Indicating Transmitter	I-161	CASSF Main PLC	By Contractor		
P-00-LSH-1601	DI	24VDC	Sodium Hydroxide Storage Tank And Dosing Pumps Containment Area Leak Alarm	I-161	CASSF Main PLC	By Contractor		
P-00-LSH-1602	DI	24VDC	Sodium Hydroxide Storage Tank Interstitial Leak Alarm	I-161	CASSF Main PLC	By Contractor		
P-00-LSHH-1600	DI	24VDC	Sodium Hydroxide Storage Tank Level Alarm High High	I-161	CASSF Main PLC	By Contractor		
P-00-HS-1603	DO	120VAC	Sodium Hydroxide Dosing Pump No 1 Start/Stop Command	I-162	CASSF Main PLC	By Contractor		
P-00-PSH-1603	DI	24VDC	Sodium Hydroxide Dosing Pump No 1 Discharge Pressure Alarm High	I-162	CASSF Main PLC	By Contractor		
P-00-SC-1603	AO	4-20mA	Sodium Hydroxide Dosing Pump No 1 Speed Setpoint	I-162	CASSF Main PLC	By Contractor		
P-00-SI-1603	AI	4-20mA	Sodium Hydroxide Dosing Pump No 1 Speed Indicator	I-162	CASSF Main PLC	By Contractor		
P-00-XS-1603	DI	24VDC	Sodium Hydroxide Dosing Pump No 1 Leak Alarm	I-162	CASSF Main PLC	By Contractor		
P-00-YA-1603	DI	24VDC	Sodium Hydroxide Dosing Pump No 1 Fail Alarm	I-162	CASSF Main PLC	By Contractor		
P-00-YL-1603B	DI	24VDC	Sodium Hydroxide Dosing Pump No 1 Run Status	I-162	CASSF Main PLC	By Contractor		

P-00-ZL-1603A	DI	24VDC	Sodium Hydroxide Dosing Pump No 1 Ready Status	I-162	CASSF Main PLC	By Contractor		
P-00-HS-1611	DO	120VAC	Sodium Hydroxide Dosing Pump No 2 Start/Stop Command	I-163	CASSF Main PLC	By Contractor		
P-00-HS-1612	DO	120VAC	Sodium Hydroxide Dosing Pump No 3 Start/Stop Command	I-163	CASSF Main PLC	By Contractor		
P-00-HS-1613	DO	120VAC	Sodium Hydroxide Dosing Pump No 4 Start/Stop Command	I-163	CASSF Main PLC	By Contractor		
P-00-HS-1614	DO	120VAC	Sodium Hydroxide Dosing Pump No 5 Start/Stop Command	I-163	CASSF Main PLC	By Contractor		
P-00-PSH-1611	DI	24VDC	Sodium Hydroxide Dosing Pump No 2 Discharge Pressure Alarm High	I-163	CASSF Main PLC	By Contractor		
P-00-PSH-1612	DI	24VDC	Sodium Hydroxide Dosing Pump No 3 Discharge Pressure Alarm High	I-163	CASSF Main PLC	By Contractor		
P-00-PSH-1613	DI	24VDC	Sodium Hydroxide Dosing Pump No 4 Discharge Pressure Alarm High	I-163	CASSF Main PLC	By Contractor		
P-00-PSH-1614	DI	24VDC	Sodium Hydroxide Dosing Pump No 5 Discharge Pressure Alarm High	I-163	CASSF Main PLC	By Contractor		
P-00-SC-1611	AO	4-20mA	Sodium Hydroxide Dosing Pump No 2 Speed Setpoint	I-163	CASSF Main PLC	By Contractor		
P-00-SC-1612	AO	4-20mA	Sodium Hydroxide Dosing Pump No 3 Speed Setpoint	I-163	CASSF Main PLC	By Contractor		
P-00-SC-1613	AO	4-20mA	Sodium Hydroxide Dosing Pump No 4 Speed Setpoint	I-163	CASSF Main PLC	By Contractor		
P-00-SC-1614	AO	4-20mA	Sodium Hydroxide Dosing Pump No 5 Speed Setpoint	I-163	CASSF Main PLC	By Contractor		
P-00-SI-1611	AI	4-20mA	Sodium Hydroxide Dosing Pump No 2 Speed Indicator	I-163	CASSF Main PLC	By Contractor		
P-00-SI-1612	AI	4-20mA	Sodium Hydroxide Dosing Pump No 3 Speed Indicator	I-163	CASSF Main PLC	By Contractor		
P-00-SI-1613	AI	4-20mA	Sodium Hydroxide Dosing Pump No 4 Speed Indicator	I-163	CASSF Main PLC	By Contractor		
P-00-SI-1614	AI	4-20mA	Sodium Hydroxide Dosing Pump No 5 Speed Indicator	I-163	CASSF Main PLC	By Contractor		
P-00-XS-1611	DI	24VDC	Sodium Hydroxide Dosing Pump No 2 Leak Alarm	I-163	CASSF Main PLC	By Contractor		
P-00-XS-1612	DI	24VDC	Sodium Hydroxide Dosing Pump No 3 Leak Alarm	I-163	CASSF Main PLC	By Contractor		
P-00-XS-1613	DI	24VDC	Sodium Hydroxide Dosing Pump No 4 Leak Alarm	I-163	CASSF Main PLC	By Contractor		
P-00-XS-1614	DI	24VDC	Sodium Hydroxide Dosing Pump No 5 Leak Alarm	I-163	CASSF Main PLC	By Contractor		
P-00-YA-1611	DI	24VDC	Sodium Hydroxide Dosing Pump No 2 Fail Alarm	I-163	CASSF Main PLC	By Contractor		
P-00-YA-1612	DI	24VDC	Sodium Hydroxide Dosing Pump No 3 Fail Alarm	I-163	CASSF Main PLC	By Contractor		
P-00-YA-1613	DI	24VDC	Sodium Hydroxide Dosing Pump No 4 Fail Alarm	I-163	CASSF Main PLC	By Contractor		
P-00-YA-1614	DI	24VDC	Sodium Hydroxide Dosing Pump No 5 Fail Alarm	I-163	CASSF Main PLC	By Contractor		
P-00-YL-1611B	DI	24VDC	Sodium Hydroxide Dosing Pump No 2 Run Status	I-163	CASSF Main PLC	By Contractor		
P-00-YL-1612B	DI	24VDC	Sodium Hydroxide Dosing Pump No 3 Run Status	I-163	CASSF Main PLC	By Contractor		
P-00-YL-1613B	DI	24VDC	Sodium Hydroxide Dosing Pump No 4 Run Status	I-163	CASSF Main PLC	By Contractor		
P-00-YL-1614B	DI	24VDC	Sodium Hydroxide Dosing Pump No 5 Run Status	I-163	CASSF Main PLC	By Contractor		
P-00-ZL-1611A	DI	24VDC	Sodium Hydroxide Dosing Pump No 2 Ready Status	I-163	CASSF Main PLC	By Contractor		
P-00-ZL-1612A	DI	24VDC	Sodium Hydroxide Dosing Pump No 3 Ready Status	I-163	CASSF Main PLC	By Contractor		
P-00-ZL-1613A	DI	24VDC	Sodium Hydroxide Dosing Pump No 4 Ready Status	I-163	CASSF Main PLC	By Contractor		
P-00-ZL-1614A	DI	24VDC	Sodium Hydroxide Dosing Pump No 5 Ready Status	I-163	CASSF Main PLC	By Contractor		
P-00-HS-1615	DO	120VAC	Sodium Hydroxide Dosing Pump No 6 Start/Stop Command	I-164	CASSF Main PLC	By Contractor		
P-00-HS-1616	DO	120VAC	Sodium Hydroxide Dosing Pump No 7 Start/Stop Command	I-164	CASSF Main PLC	By Contractor		
P-00-PSH-1615	DI	24VDC	Sodium Hydroxide Dosing Pump No 6 Discharge Pressure Alarm High	I-164	CASSF Main PLC	By Contractor		
P-00-PSH-1616	DI	24VDC	Sodium Hydroxide Dosing Pump No 7 Discharge Pressure Alarm High	I-164	CASSF Main PLC	By Contractor		
P-00-SC-1615	AO	4-20mA	Sodium Hydroxide Dosing Pump No 6 Speed Setpoint	I-164	CASSF Main PLC	By Contractor		
P-00-SC-1616	AO	4-20mA	Sodium Hydroxide Dosing Pump No 7 Speed Setpoint	I-164	CASSF Main PLC	By Contractor		
P-00-SI-1615	AI	4-20mA	Sodium Hydroxide Dosing Pump No 6 Speed Indicator	I-164	CASSF Main PLC	By Contractor		
P-00-SI-1616	AI	4-20mA	Sodium Hydroxide Dosing Pump No 7 Speed Indicator	I-164	CASSF Main PLC	By Contractor		
P-00-XS-1615	DI	24VDC	Sodium Hydroxide Dosing Pump No 6 Leak Alarm	I-164	CASSF Main PLC	By Contractor		
P-00-XS-1616	DI	24VDC	Sodium Hydroxide Dosing Pump No 7 Leak Alarm	I-164	CASSF Main PLC	By Contractor		
P-00-YA-1615	DI	24VDC	Sodium Hydroxide Dosing Pump No 6 Fail Alarm	I-164	CASSF Main PLC	By Contractor		
P-00-YA-1616	DI	24VDC	Sodium Hydroxide Dosing Pump No 7 Fail Alarm	I-164	CASSF Main PLC	By Contractor		
P-00-YL-1615B	DI	24VDC	Sodium Hydroxide Dosing Pump No 6 Run Status	I-164	CASSF Main PLC	By Contractor		
P-00-YL-1616B	DI	24VDC	Sodium Hydroxide Dosing Pump No 7 Run Status Indication	I-164	CASSF Main PLC	By Contractor		
P-00-ZL-1615A	DI	24VDC	Sodium Hydroxide Dosing Pump No 6 Ready Status	I-164	CASSF Main PLC	By Contractor		
P-00-ZL-1616A	DI	24VDC	Sodium Hydroxide Dosing Pump No 7 Ready Status	I-164	CASSF Main PLC	By Contractor		
P-00-HS-1631	DO	120VAC	Antiscalant Dosing Pump No 1 Start/Stop Command	I-166	CASSF Main PLC	By Contractor		
P-00-HS-1632	DO	120VAC	Antiscalant Dosing Pump No 2 Start/Stop Command	I-166	CASSF Main PLC	By Contractor		
P-00-HS-1633	DO	120VAC	Antiscalant Dosing Pump No 3 Start/Stop Command	I-166	CASSF Main PLC	By Contractor		
P-00-HS-1634	DO	120VAC	Antiscalant Dosing Pump No 4 Start/Stop Command	I-166	CASSF Main PLC	By Contractor		
P-00-LSH-1636	DI	24VDC	Antiscalant System Storage And Dosing Pumps Containment Area Leak Alarm	I-166	CASSF Main PLC	By Contractor		
P-00-PSH-1631	DI	24VDC	Antiscalant Dosing Pump No 1 Discharge Pressure Alarm High	I-166	CASSF Main PLC	By Contractor		
P-00-PSH-1632	DI	24VDC	Antiscalant Dosing Pump No 2 Discharge Pressure Alarm High	I-166	CASSF Main PLC	By Contractor		

P-00-PSH-1633	DI	24VDC	Antiscalant Dosing Pump No 3 Discharge Pressure Alarm High	I-166	CASSF Main PLC	By Contractor		
P-00-PSH-1634	DI	24VDC	Antiscalant Dosing Pump No 4 Discharge Pressure Alarm High	I-166	CASSF Main PLC	By Contractor		
P-00-SC-1631	AO	4-20mA	Antiscalant Dosing Pump No 1 Speed Setpoint	I-166	CASSF Main PLC	By Contractor		
P-00-SC-1632	AO	4-20mA	Antiscalant Dosing Pump No 2 Speed Setpoint	I-166	CASSF Main PLC	By Contractor		
P-00-SC-1633	AO	4-20mA	Antiscalant Dosing Pump No 3 Speed Setpoint	I-166	CASSF Main PLC	By Contractor		
P-00-SC-1634	AO	4-20mA	Antiscalant Dosing Pump No 4 Speed Setpoint	I-166	CASSF Main PLC	By Contractor		
P-00-SI-1631	AI	4-20mA	Antiscalant Dosing Pump No 1 Speed Indicator	I-166	CASSF Main PLC	By Contractor		
P-00-SI-1632	AI	4-20mA	Antiscalant Dosing Pump No 2 Speed Indicator	I-166	CASSF Main PLC	By Contractor		
P-00-SI-1633	AI	4-20mA	Antiscalant Dosing Pump No 3 Speed Indicator	I-166	CASSF Main PLC	By Contractor		
P-00-SI-1634	AI	4-20mA	Antiscalant Dosing Pump No 4 Speed Indicator	I-166	CASSF Main PLC	By Contractor		
P-00-XS-1631	DI	24VDC	Antiscalant Dosing Pump No 1 Leak Alarm	I-166	CASSF Main PLC	By Contractor		
P-00-XS-1632	DI	24VDC	Antiscalant Dosing Pump No 2 Leak Alarm	I-166	CASSF Main PLC	By Contractor		
P-00-XS-1633	DI	24VDC	Antiscalant Dosing Pump No 3 Leak Alarm	I-166	CASSF Main PLC	By Contractor		
P-00-XS-1634	DI	24VDC	Antiscalant Dosing Pump No 4 Leak Alarm	I-166	CASSF Main PLC	By Contractor		
P-00-YA-1631	DI	24VDC	Antiscalant Dosing Pump No 1 Fail Alarm	I-166	CASSF Main PLC	By Contractor		
P-00-YA-1632	DI	24VDC	Antiscalant Dosing Pump No 2 Fail Alarm	I-166	CASSF Main PLC	By Contractor		
P-00-YA-1633	DI	24VDC	Antiscalant Dosing Pump No 3 Fail Alarm	I-166	CASSF Main PLC	By Contractor		
P-00-YA-1634	DI	24VDC	Antiscalant Dosing Pump No 4 Fail Alarm	I-166	CASSF Main PLC	By Contractor		
P-00-YL-1631B	DI	24VDC	Antiscalant Dosing Pump No 1 Run Status	I-166	CASSF Main PLC	By Contractor		
P-00-YL-1632B	DI	24VDC	Antiscalant Dosing Pump No 2 Run Status Indication	I-166	CASSF Main PLC	By Contractor		
P-00-YL-1633B	DI	24VDC	Antiscalant Dosing Pump No 3 Run Status	I-166	CASSF Main PLC	By Contractor		
P-00-YL-1634B	DI	24VDC	Antiscalant Dosing Pump No 4 Run Status	I-166	CASSF Main PLC	By Contractor		
P-00-ZL-1631A	DI	24VDC	Antiscalant Dosing Pump No 1 Ready Status	I-166	CASSF Main PLC	By Contractor		
P-00-ZL-1632A	DI	24VDC	Antiscalant Dosing Pump No 2 Ready Status	I-166	CASSF Main PLC	By Contractor		
P-00-ZL-1633A	DI	24VDC	Antiscalant Dosing Pump No 3 Ready Status	I-166	CASSF Main PLC	By Contractor		
P-00-ZL-1634A	DI	24VDC	Antiscalant Dosing Pump No 4 Ready Status	I-166	CASSF Main PLC	By Contractor		
P-00-TI-002	AI	4-20mA	CASSF Main PLC Control Panel Temperature Indicator	I-191	CASSF Main PLC	By Contractor		
P-00-XA-002	DI	24VDC	CASSF Main PLC Control Panel Intrusion Alarm	I-191	CASSF Main PLC	By Contractor		
P-00-YA-001A	DI	24VDC	UPS Fault Alarm	I-191	CASSF Main PLC	By Contractor		
P-00-YA-001B	DI	24VDC	UPS Low Battery Alarm	I-191	CASSF Main PLC	By Contractor		
P-00-YA-002A	DI	24VDC	CASSF Main PLC Control Panel PS1 24VDC Primary Power Fail Alarm	I-191	CASSF Main PLC	By Contractor		
P-00-YA-002B	DI	24VDC	CASSF Main PLC Control Panel PS2 24VDC Secondary Power Fail Alarm	I-191	CASSF Main PLC	By Contractor		
P-00-YA-002C	DI	24VDC	CASSF Main PLC Control Panel Redundancy Module Fail Alarm	I-191	CASSF Main PLC	By Contractor		
P-00-YA-002D	DI	24VDC	CASSF Main PLC Control Panel Ethernet Switch Major Alarm	I-191	CASSF Main PLC	By Contractor		
P-00-YL-001A	DI	24VDC	UPS On Status Indication	I-191	CASSF Main PLC	By Contractor		
P-00-YL-001B	DI	24VDC	UPS Bypass Stauts Indication	I-191	CASSF Main PLC	By Contractor		
P-00-HS-310C	DI	24VDC	Primary Influent Pump Start/Stop Status	I-195	CASSF Main PLC	By Contractor		
P-00-HS-320C	DI	24VDC	Primary Effluent Pump Start/Stop Status	I-195	CASSF Main PLC	By Contractor		
P-00-LAH-1301C	DO	120VAC	Acetic Acid Storage Tank And Dosing Pumps Containment Area Leak Alarm Output	I-195	CASSF Main PLC	By Contractor		
P-00-LAH-1321C	DO	120VAC	Liquid Ammonium Sulfate Storage Tank And Dosing Pumps Containment Area Leak Alarm Output	I-195	CASSF Main PLC	By Contractor		
P-00-LAH-1401C	DO	120VAC	Sodium Hypochlorite Storage Tank And Dosing Pumps Containment Area Leak Alarm Output	I-195	CASSF Main PLC	By Contractor		
P-00-LAH-1441C	DO	120VAC	Sulfuric Acid Storage Tank And Dosing Pumps Containment Area Leak Alarm Output	I-195	CASSF Main PLC	By Contractor		
P-00-LAH-1501C	DO	120VAC	Sodium Bisulfate Storage Tank And Dosing Pumps Containment Area Leak Alarm Output	I-195	CASSF Main PLC	By Contractor		
P-00-LAH-1541C	DO	120VAC	Citric Acid Storage Tank And Transfer Pumps Containment Area Leak Alarm Output	I-195	CASSF Main PLC	By Contractor		
P-00-LAH-1601C	DO	120VAC	Sodium Hydroxide Storage Tank And Dosing Pumps Containment Area Leak Alarm Output	I-195	CASSF Main PLC	By Contractor		
P-00-LAHH-1300C	DO	120VAC	Acetic Acid Storage Tank Overflow Alarm Output	I-195	CASSF Main PLC	By Contractor		
P-00-LAHH-1320C	DO	120VAC	Liquid Ammonium Sulfate Storage Tank Overflow Alarm Output	I-195	CASSF Main PLC	By Contractor		
P-00-LAHH-1400C	DO	120VAC	Sodium Hypochlorite Storage Tank Level Overflow Alarm Output	I-195	CASSF Main PLC	By Contractor		
P-00-LAHH-1440C	DO	120VAC	Sulfuric Acid Storage Tank Level Overflow Alarm Output	I-195	CASSF Main PLC	By Contractor		
P-00-LAHH-1500C	DO	120VAC	Sodium Bisulfate Storage Tank Overflow Alarm Output	I-195	CASSF Main PLC	By Contractor		
P-00-LAHH-1540C	DO	120VAC	Citric Acid Storage Tank Overflow Alarm Output	I-195	CASSF Main PLC	By Contractor		
P-00-LAHH-1600C	DO	120VAC	Sodium Hydroxide Storage Tank Overflow Alarm Output	I-195	CASSF Main PLC	By Contractor		
P-00-YA-310C	DO	120VAC	Primary Influent Pump Fail Status Output	I-195	CASSF Main PLC	By Contractor		
P-00-YA-320C	DO	120VAC	Primary Effluent Pump Fail Alarm	I-195	CASSF Main PLC	By Contractor		
P-00-YL-310C	DO	120VAC	Primary Influent Pump Run Status Output	I-195	CASSF Main PLC	By Contractor		
P-00-YL-320C	DO	120VAC	Primary Effluent Pump Run Status	I-195	CASSF Main PLC	By Contractor		

P-00-YA-1001C	DO	120VAC	Conventional RO (San Vicente Train) System Fail Output	I-196	CASSF Main PLC	By Contractor		
P-00-YA-1100C	DO	120VAC	UV System No 1 (Murray Train) Fail Output	I-196	CASSF Main PLC	By Contractor		
P-00-YA-400C	DO	120VAC	BNR System Fail Output	I-196	CASSF Main PLC	By Contractor		
P-00-YA-450C	DO	120VAC	BNR Aeration Blower No 1 Fail Output	I-196	CASSF Main PLC	By Contractor		
P-00-YA-460C	DO	120VAC	BNR Aeration Blower No 2 Fail Output	I-196	CASSF Main PLC	By Contractor		
P-00-YA-500C	DO	120VAC	MBR System Master Control Fail Output	I-196	CASSF Main PLC	By Contractor		
P-00-YA-700C	DO	120VAC	Ozone (Murray Train) System Fail Output	I-196	CASSF Main PLC	By Contractor		
P-00-YA-800C	DO	120VAC	BAC (Murray Train) System Fail Output	I-196	CASSF Main PLC	By Contractor		
P-00-YA-870C	DO	120VAC	MF (Murray Train) System Fail Output	I-196	CASSF Main PLC	By Contractor		
P-00-YA-920C	DO	120VAC	Conventional RO (Murray Train) System Fail Output	I-196	CASSF Main PLC	By Contractor		
P-00-YA-970C	DO	120VAC	CCRO (Closed Circuit RO Murray Train) System Fail Output	I-196	CASSF Main PLC	By Contractor		
P-00-YA-990C	DO	120VAC	FRRO Forward-Reverse RO (Murray Train) System Fail Output	I-196	CASSF Main PLC	By Contractor		
P-00-FAH-230C	DO	120VAC	Sodium Bisulfite Eyewash Shower Inlet Flow Alarm High Output	I-197	CASSF Main PLC	By Contractor		
P-00-FAH-231C	DO	120VAC	Acetic Acid Eyewash Shower Inlet Flow Alarm High Output	I-197	CASSF Main PLC	By Contractor		
P-00-FAH-232C	DO	120VAC	Sodium Hydroxide Eyewash Shower Inlet Flow Alarm High Output	I-197	CASSF Main PLC	By Contractor		
P-00-FAH-233C	DO	120VAC	MBR CIP Chemicals Eyewash Shower Inlet Flow Alarm High Output	I-197	CASSF Main PLC	By Contractor		
P-00-FAH-234C	DO	120VAC	Ozone Area Eyewash Shower Inlet Flow Alarm High Output	I-197	CASSF Main PLC	By Contractor		
P-00-FAH-235C	DO	120VAC	Antiscalant And Sulfuric Acid Area Eyewash Shower Inlet Flow Alarm High Output	I-197	CASSF Main PLC	By Contractor		
P-00-YA-1120C	DO	120VAC	UV System No 2 (Murray Train) System Fail Output	I-197	CASSF Main PLC	By Contractor		
P-00-AIT-210	AI	4-20mA	Instrument Air Dryer Dew Point Analyzer Indicating Transmitter	I-27	CASSF Main PLC	By Contractor		
P-00-HS-221	DO	120VAC	Air Receiver Tank Condensate Drain Valve On/Off Command	I-27	CASSF Main PLC	By Contractor		
P-00-PIT-220	AI	4-20mA	Air Receiver Pressure Indicating Transmitter	I-27	CASSF Main PLC	By Contractor		
P-00-PIT-221	AI	4-20mA	Air Receiver Discharge Pressure Indicating Transmitter	I-27	CASSF Main PLC	By Contractor		
P-00-YA-200	DI	24VDC	Rotary Screw Compressor No 1 Fail Alarm	I-27	CASSF Main PLC	By Contractor		
P-00-YA-200A	DI	24VDC	Rotary Screw Compressor No 1 E-Stop Alarm	I-27	CASSF Main PLC	By Contractor		
P-00-YL-200	DI	24VDC	Rotary Screw Compressor No 1 Run Status Indication	I-27	CASSF Main PLC	By Contractor		
P-00-ZL-200	DI	24VDC	Rotary Screw Compressor No 1 Auto Position Status	I-27	CASSF Main PLC	By Contractor		
P-00-FSH-230	DI	24VDC	Sodium Bisulfite Area Eyewash Shower Inlet Flow Alarm High	I-28	CASSF Main PLC	By Contractor		
P-00-FSH-231	DI	24VDC	Acetic Acid Area Eyewash Shower Inlet Flow Alarm High	I-28	CASSF Main PLC	By Contractor		
P-00-FSH-232	DI	24VDC	Sodium Hydroxide Area Eyewash Shower Inlet Flow Alarm High	I-28	CASSF Main PLC	By Contractor		
P-00-FSH-233	DI	24VDC	MBR Area Eyewash Shower Inlet Flow Alarm High	I-28	CASSF Main PLC	By Contractor		
P-00-FSH-234	DI	24VDC	Ozone Area Eyewash Shower Inlet Flow Alarm High	I-28	CASSF Main PLC	By Contractor		
P-00-FSH-235	DI	24VDC	Antiscalant And Sulfuric Acid Area Eyewash Shower Inlet Flow Alarm High	I-28	CASSF Main PLC	By Contractor		
P-00-HS-240	DO	120VAC	Plant Drain Pump No 1 Start/Stop Command	I-30	CASSF Main PLC	By Contractor		
P-00-HS-250	DO	120VAC	Plant Drain Pump No 2 Start/Stop Command	I-30	CASSF Main PLC	By Contractor		
P-00-YA-240	DI	24VDC	Plant Drain Pump No 1 Fail Alarm	I-30	CASSF Main PLC	By Contractor		
P-00-YA-250	DI	24VDC	Plant Drain Pump No 2 Fail Alarm	I-30	CASSF Main PLC	By Contractor		
P-00-YL-240	DI	24VDC	Plant Drain Pump No 1 Run Status Indication	I-30	CASSF Main PLC	By Contractor		
P-00-YL-250	DI	24VDC	Plant Drain Pump No 2 Run Status Indication	I-30	CASSF Main PLC	By Contractor		
P-00-ZL-240	DI	24VDC	Plant Drain Pump No 1 Ready Status Indication	I-30	CASSF Main PLC	By Contractor		
P-00-ZL-250	DI	24VDC	Plant Drain Pump No 2 Ready Status	I-30	CASSF Main PLC	By Contractor		
P-00-FIT-320	AI	4-20mA	Primary Effluent Pump Discharge Flow Indicating Transmitter	I-31	CASSF Main PLC	By Contractor		
P-00-HS-300	DO	120VAC	Grinder Start/Stop Command	I-31	CASSF Main PLC	By Contractor		
P-00-HS-310	DO	120VAC	Primary Influent Pump Start/Stop Command	I-31	CASSF Main PLC	By Contractor		
P-00-HS-320	DO	120VAC	Primary Effluent Pump Start/Stop Command	I-31	CASSF Main PLC	By Contractor		
P-00-PAH-310	DI	24VDC	Primary Influent Pump Pressure Alarm High	I-31	CASSF Main PLC	By Contractor		
P-00-PAH-320	DI	24VDC	Primary Effluent Pump Pressure Alarm High	I-31	CASSF Main PLC	By Contractor		
P-00-TAH-300	DI	24VDC	Grinder Temperature Alarm High	I-31	CASSF Main PLC	By Contractor		
P-00-TAH-310	DI	24VDC	Primary Influent Pump Temperature Alarm High	I-31	CASSF Main PLC	By Contractor		
P-00-TAH-320	DI	24VDC	Primary Effluent Pump Temperature Alarm High	I-31	CASSF Main PLC	By Contractor		
P-00-YA-300	DI	24VDC	Grinder Fail Alarm	I-31	CASSF Main PLC	By Contractor		
P-00-YA-300A	DI	24VDC	Grinder E-Stop Alarm	I-31	CASSF Main PLC	By Contractor		
P-00-YA-310	DI	24VDC	Primary Influent Pump Fail Alarm	I-31	CASSF Main PLC	By Contractor		
P-00-YA-310A	DI	24VDC	Primary Influent Pump E-Stop Alarm	I-31	CASSF Main PLC	By Contractor		
P-00-YA-320	DI	24VDC	Primary Effluent Pump Fail Alarm	I-31	CASSF Main PLC	By Contractor		
P-00-YA-320A	DI	24VDC	Primary Effluent Pump E-Stop Alarm	I-31	CASSF Main PLC	By Contractor		

P-00-YA-321	DI	24VDC	PE Flow Control Valve Fail Alarm	I-31	CASSF Main PLC	By Contractor		
P-00-YL-300	DI	24VDC	Grinder Run Status Indication	I-31	CASSF Main PLC	By Contractor		
P-00-YL-310	DI	24VDC	Primary Influent Pump Run Status Indication	I-31	CASSF Main PLC	By Contractor		
P-00-YL-320	DI	24VDC	Primary Effluent Pump Run Status Indication	I-31	CASSF Main PLC	By Contractor		
P-00-ZI-321	AI	4-20mA	PE Flow Control Valve Position Indicator	I-31	CASSF Main PLC	By Contractor		
P-00-ZK-321	AO	4-20mA	PE Flow Control Valve Position Setpoint	I-31	CASSF Main PLC	By Contractor		
P-00-ZL-300A	DI	24VDC	Grinder Ready Status Indication	I-31	CASSF Main PLC	By Contractor		
P-00-ZL-310A	DI	24VDC	Primary Influent Pump Ready Status Indication	I-31	CASSF Main PLC	By Contractor		
P-00-ZL-320A	DI	24VDC	Primary Effluent Pump Ready Status Indication	I-31	CASSF Main PLC	By Contractor		
P-00-ZL-321	DI	24VDC	PE Flow Control Valve Ready Status Indication	I-31	CASSF Main PLC	By Contractor		
P-00-ZLC-321	DI	24VDC	PE Flow Control Valve Closed Position Status	I-31	CASSF Main PLC	By Contractor		
P-00-ZLO-321	DI	24VDC	PE Flow Control Valve Open Position Status	I-31	CASSF Main PLC	By Contractor		
P-00-FIT-333	AI	4-20mA	Primary Influent Self-Cleaning Strainer Discharge Flow Indicating Transmitter	I-32	CASSF Main PLC	By Contractor		
P-00-YA-334	DI	24VDC	PI Flow Control Valve Fail Alarm	I-32	CASSF Main PLC	By Contractor		
P-00-ZI-334	AI	4-20mA	PI Flow Control Valve Position Indicator	I-32	CASSF Main PLC	By Contractor		
P-00-ZK-334	AO	4-20mA	PI Flow Control Valve Position Setpoint	I-32	CASSF Main PLC	By Contractor		
P-00-ZL-334	DI	24VDC	PI Flow Control Valve Ready Status Indication	I-32	CASSF Main PLC	By Contractor		
P-00-ZLC-334	DI	24VDC	PI Flow Control Valve Closed Position Status	I-32	CASSF Main PLC	By Contractor		
P-00-ZLO-334	DI	24VDC	PI Flow Control Valve Open Position Status	I-32	CASSF Main PLC	By Contractor		
P-00-FAH-360	DSDI	EtherNet / IP	BNR Feed Pump Flow Alarm High	I-33	CASSF Main PLC	By Contractor		
P-00-FIT-361	AI	4-20mA	BNR Feed Pump Discharge Flow Indicating Transmitter	I-33	CASSF Main PLC	By Contractor		
P-00-HS-350	DO	120VAC	Blending Tank Mixing Pump Start/Stop Command	I-33	CASSF Main PLC	By Contractor		
P-00-HS-360	DSDO	EtherNet / IP	BNR Feed Pump Start/Stop Command	I-33	CASSF Main PLC	By Contractor		
P-00-LIT-340	AI	4-20mA	Blending Tank Level Indicating Transmitter	I-33	CASSF Main PLC	By Contractor		
P-00-LSHH-340	DI	24VDC	Blending Tank Level Alarm High High	I-33	CASSF Main PLC	By Contractor		
P-00-PAH-360	DSDI	EtherNet / IP	BNR Feed Pump Pressure High Alarm	I-33	CASSF Main PLC	By Contractor		
P-00-SI-360	DSAI	EtherNet / IP	BNR Feed Pump Speed Indicator	I-33	CASSF Main PLC	By Contractor		
P-00-SK-360	DSAO	EtherNet / IP	BNR Feed Pump Speed Setpoint	I-33	CASSF Main PLC	By Contractor		
P-00-TAH-350	DI	24VDC	Blending Tank Mixing Pump Temperature Alarm High	I-33	CASSF Main PLC	By Contractor		
P-00-TAH-360	DSDI	EtherNet / IP	BNR Feed Pump Temperature Alarm High	I-33	CASSF Main PLC	By Contractor		
P-00-YA-350A	DI	24VDC	Blending Tank Mixing Pump Fail Alarm	I-33	CASSF Main PLC	By Contractor		
P-00-YA-350B	DI	24VDC	Blending Tank Mixing Pump E-Stop Alarm	I-33	CASSF Main PLC	By Contractor		
P-00-YA-360A	DSDI	EtherNet / IP	BNR Feed Pump Fail Alarm	I-33	CASSF Main PLC	By Contractor		
P-00-YA-360B	DSDI	EtherNet / IP	BNR Feed Pump E-Stop Alarm	I-33	CASSF Main PLC	By Contractor		
P-00-YL-350	DI	24VDC	Blending Tank Mixing Pump Run Status Indication	I-33	CASSF Main PLC	By Contractor		
P-00-YL-360B	DSDI	EtherNet / IP	BNR Feed Pump Run Status Indication	I-33	CASSF Main PLC	By Contractor		
P-00-ZL-350A	DI	24VDC	Blending Tank Mixing Pump Ready Status Indication	I-33	CASSF Main PLC	By Contractor		
P-00-ZL-360A	DSDI	EtherNet / IP	BNR Feed Pump Ready Status Indication	I-33	CASSF Main PLC	By Contractor		
P-00-LIT-550	AI	4-20mA	MBR System Filtrate Tank No 1 Level Indicating Transmitter	I-55	CASSF Main PLC	By Contractor		
P-00-LIT-560	AI	4-20mA	MBR System Filtrate Tank No 2 Level Indicating Transmitter	I-55	CASSF Main PLC	By Contractor		
P-00-FAL-570	DSDI	EtherNet / IP	PWF Feed Pump Flow Alarm Low	I-56	CASSF Main PLC	By Contractor		
P-00-FIT-571	AI	4-20mA	PWF Feed Pump Discharge Flow Indicating Transmitter	I-56	CASSF Main PLC	By Contractor		
P-00-HS-570	DSDO	EtherNet / IP	PWF Feed Pump Start/Stop Command	I-56	CASSF Main PLC	By Contractor		
P-00-II-570	DSAI	EtherNet / IP	PWF Feed Pump Current Indicator	I-56	CASSF Main PLC	By Contractor		
P-00-SI-570	DSAI	EtherNet / IP	PWF Feed Pump Speed Indicator	I-56	CASSF Main PLC	By Contractor		
P-00-SK-570	DSAO	EtherNet / IP	PWF Feed Pump Speed Setpoint	I-56	CASSF Main PLC	By Contractor		
P-00-TAH-570	DSDI	EtherNet / IP	PWF Feed Pump Temperature Alarm High	I-56	CASSF Main PLC	By Contractor		
P-00-YA-570A	DSDI	EtherNet / IP	PWF Feed Pump Fail Alarm	I-56	CASSF Main PLC	By Contractor		
P-00-YA-570B	DSDI	EtherNet / IP	PWF Feed Pump E-Stop Alarm	I-56	CASSF Main PLC	By Contractor		
P-00-YL-570B	DSDI	EtherNet / IP	PWF Feed Pump Run Status Indication	I-56	CASSF Main PLC	By Contractor		
P-00-ZL-570A	DSDI	EtherNet / IP	PWF Feed Pump Ready Status Indication	I-56	CASSF Main PLC	By Contractor		
P-00-FIT-631	AI	4-20mA	Pathogen Pump No 1 Discharge Flow Indicating Transmitter	I-61	CASSF Main PLC	By Contractor		
P-00-FIT-641	AI	4-20mA	Pathogen Pump No 2 Discharge Flow Indicating Transmitter	I-61	CASSF Main PLC	By Contractor		
P-00-LIT-610	AI	4-20mA	Pathogen Test Tank No 1 Level Indicating Transmitter	I-61	CASSF Main PLC	By Contractor		
P-00-LIT-620	AI	4-20mA	Pathogen Test Tank No 2 Level Indicating Transmitter	I-61	CASSF Main PLC	By Contractor		
P-00-AIT-741	AI	4-20mA	Ozone Contactor DO3 Analyzer Indicating Transmitter	I-73	CASSF Main PLC	By Contractor		

P-00-AIT-744	AI	4-20mA	Ozone Contactor DO3/Temp Analyzer Indicating Transmitter	I-73	CASSF Main PLC	By Contractor		
P-00-AIT-745	AI	4-20mA	Ozone Contactor DO3 Analyzer Indicating Transmitter	I-73	CASSF Main PLC	By Contractor		
P-00-AIT-746	AI	4-20mA	Ozone Product UVT Analyzer Indicating Transmitter	I-73	CASSF Main PLC	By Contractor		
P-00-AIT-747	AI	4-20mA	Ozone Product ORP Analyzer Indicating Transmitter	I-73	CASSF Main PLC	By Contractor		
P-00-AIT-748	AI	4-20mA	Ozone Product Turbidity Analyzer Indicating Transmitter	I-73	CASSF Main PLC	By Contractor		
P-00-FSL-735	DI	24VDC	Ozone Contactor Effluent Sample Low Flow Alarm	I-73	CASSF Main PLC	By Contractor		
P-00-FSL-741	DI	24VDC	Ozone Contactor Sample Low Flow Alarm No 1	I-73	CASSF Main PLC	By Contractor		
P-00-FSL-744	DI	24VDC	Ozone Contactor Sample Low Flow Alarm No 2	I-73	CASSF Main PLC	By Contractor		
P-00-FSL-745	DI	24VDC	Ozone Contactor Sample Low Flow Alarm No 3	I-73	CASSF Main PLC	By Contractor		
P-00-TIT-744	AI	4-20mA	Ozone Contactor Analyzer Temperature Indicating Transmitter	I-73	CASSF Main PLC	By Contractor		
P-00-LIT-740	AI	4-20mA	Ozone Effluent Tank Level Indicating Transmitter	I-74	CASSF Main PLC	By Contractor		
P-00-PIT-743	AI	4-20mA	Liquid Air Reservoir Outlet Pressure Indicating Transmitter	I-74	CASSF Main PLC	By Contractor		
P-00-AIT-811	AI	4-20mA	Ozone Influent Analyzer Panel UVT Analyzer Indicating Transmitter	I-82	CASSF Main PLC	By Contractor		
P-00-AIT-812	AI	4-20mA	Ozone Influent Analyzer Panel ORP Analyzer Indicating Transmitter	I-82	CASSF Main PLC	By Contractor		
P-00-FSL-811	DI	24VDC	Ozone System Feed Supply Low Flow Alarm	I-82	CASSF Main PLC	By Contractor		
P-00-HS-824	DSDO	EtherNet / IP	MF Transfer Pump Start/Stop Command	I-82	CASSF Main PLC	By Contractor		
P-00-II-824	DSAI	EtherNet / IP	MF Transfer Pump Current Indicator	I-82	CASSF Main PLC	By Contractor		
P-00-LIT-820	AI	4-20mA	BAC Filtrate Tank Level Indicating Transmitter	I-82	CASSF Main PLC	By Contractor		
P-00-SI-824	DSAI	EtherNet / IP	MF Transfer Pump Speed Indicator	I-82	CASSF Main PLC	By Contractor		
P-00-SK-824	DSAO	EtherNet / IP	MF Transfer Pump Speed Setpoint	I-82	CASSF Main PLC	By Contractor		
P-00-TAH-824	DSDI	EtherNet / IP	MF Transfer Pump Temperature Alarm High	I-82	CASSF Main PLC	By Contractor		
P-00-YA-824A	DSDI	EtherNet / IP	MF Transfer Pump Fail Alarm	I-82	CASSF Main PLC	By Contractor		
P-00-YA-824B	DSDI	EtherNet / IP	MF Transfer Pump E-Stop Alarm	I-82	CASSF Main PLC	By Contractor		
P-00-YL-824	DSDI	EtherNet / IP	MF Transfer Pump Run Status	I-82	CASSF Main PLC	By Contractor		
P-00-ZL-824	DSDI	EtherNet / IP	MF Transfer Pump Ready Status	I-82	CASSF Main PLC	By Contractor		
P-00-FAL-840	DI	24VDC	MBR System Filtrate/Backwash Pump Flow Alarm Low	I-83	CASSF Main PLC	By Contractor		
P-00-FIT-861	AI	4-20mA	BAC Backwash Supply Pump Discharge Flow Indicating Transmitter	I-83	CASSF Main PLC	By Contractor		
P-00-HS-840	DO	120VAC	BAC Backwash Transfer Pump Start/Stop Command	I-83	CASSF Main PLC	By Contractor		
P-00-LIT-830	AI	4-20mA	BAC Filtrate Overflow Sump Tank Level Indicating Transmitter	I-83	CASSF Main PLC	By Contractor		
P-00-LIT-850	AI	4-20mA	BAC Backwash Supply Tank Level Indicating Transmitter	I-83	CASSF Main PLC	By Contractor		
P-00-TAH-840	DI	24VDC	BAC Backwash Transfer Pump Temperature Alarm High	I-83	CASSF Main PLC	By Contractor		
P-00-YA-840	DI	24VDC	BAC Backwash Transfer Pump Fail Alarm	I-83	CASSF Main PLC	By Contractor		
P-00-YA-840A	DI	24VDC	BAC Backwash Transfer Pump E-Stop Alarm	I-83	CASSF Main PLC	By Contractor		
P-00-YL-840	DI	24VDC	BAC Backwash Transfer Pump Run Status	I-83	CASSF Main PLC	By Contractor		
P-00-ZL-840A	DI	24VDC	BAC Backwash Transfer Pump Ready Status	I-83	CASSF Main PLC	By Contractor		
P-00-AIT-813	AI	4-20mA	Ozone Influent Analyzer Panel No 1 TCL Analyzer Indicating Transmitter	I-85	CASSF Main PLC	By Contractor		
P-00-AIT-821	AI	4-20mA	BAC Filtrate Analyzer Panel Turbidity Analyzer Indicating Transmitter	I-85	CASSF Main PLC	By Contractor		
P-00-AIT-822	AI	4-20mA	BAC Filtrate Analyzer Panel TOC Analyzer Indicating Transmitter	I-85	CASSF Main PLC	By Contractor		
P-00-AIT-823	AI	4-20mA	BAC Filtrate Analyzer Panel UVT Analyzer Indicating Transmitter	I-85	CASSF Main PLC	By Contractor		
P-00-AIT-860	AI	4-20mA	MF Influent Analyzer Panel TCL Analyzer Indicating Transmitter	I-85	CASSF Main PLC	By Contractor		
P-00-AIT-861	AI	4-20mA	MF Influent Analyzer Panel NH3 Analyzer Indicating Transmitter	I-85	CASSF Main PLC	By Contractor		
P-00-FSL-813	DI	24VDC	Ozone Influent Analyzer Panel No 1 Sample Inlet Low Flow Alarm	I-85	CASSF Main PLC	By Contractor		
P-00-FSL-821	DI	24VDC	BAC Filtrate Analyzer Panel Sample Inlet Low Flow Alarm	I-85	CASSF Main PLC	By Contractor		
P-00-FSL-859	DI	24VDC	MF Influent Analyzer Panel Sample Inlet Low Flow Alarm	I-85	CASSF Main PLC	By Contractor		
P-00-AIT-903	AI	4-20mA	RO Feed Analyzer Panel TCL Analyzer Indicating Transmitter	I-91	CASSF Main PLC	By Contractor		
P-00-AIT-904	AI	4-20mA	RO Feed Analyzer Panel ORP Analyzer Indicating Transmitter	I-91	CASSF Main PLC	By Contractor		
P-00-FSL-901	DI	24VDC	RO Feed Analyzer Panel Inlet Line Flow Alarm Low	I-91	CASSF Main PLC	By Contractor		
P-00-LIT-900	AI	4-20mA	RO Feed Tank Level Indicating Transmitter	I-91	CASSF Main PLC	By Contractor		
P-00-AIT-960	AI	4-20mA	Murray RO Combined Permeate SR Analyzer Indicating Transmitter	I-97	CASSF Main PLC	By Contractor		
P-00-AIT-962	AI	4-20mA	Murray RO Combined Permeate Total Chlorine Analyzer Indicating Transmitter	I-97	CASSF Main PLC	By Contractor		
P-00-FSL-962	DI	24VDC	Conventional RO TOC Analyzer Sample Inlet Low Flow Alarm	I-97	CASSF Main PLC	By Contractor		
P-00-FAL-985	DI	24VDC	CCRO Permeate Pump Low Flow Alarm	I-98	CASSF Main PLC	By Contractor		
P-00-HS-985	DO	120VAC	CCRO Permeate Pump Start/Stop Command	I-98	CASSF Main PLC	By Contractor		
P-00-LIT-980	AI	4-20mA	CCRO Permeate Tank Level Indicating Transmitter	I-98	CASSF Main PLC	By Contractor		
P-00-TAH-985	DI	24VDC	CCRO Permeate Pump Temperature Alarm High	I-98	CASSF Main PLC	By Contractor		
P-00-YA-985	DI	24VDC	CCRO Permeate Pump E-Stop Alarm	I-98	CASSF Main PLC	By Contractor		

P-00-YA-985A	DI	24VDC	CCRO Permeate Pump Fail Alarm	I-98	CASSF Main PLC	By Contractor		
P-00-YL-985	DI	24VDC	CCRO Permeate Pump Run Status	I-98	CASSF Main PLC	By Contractor		
P-00-ZL-985	DI	24VDC	CCRO Permeate Pump Ready Status	I-98	CASSF Main PLC	By Contractor		
P-00-AIT-996	AI	4-20mA	Flow Reversal RO Pilot Conductivity Analyzer Indicating Transmitter	I-99	CASSF Main PLC	By Contractor		

DCS I/O Cabinet (Located At MCC-3 BLDG)

DI	37
DO	2

IO Tag	I/O Type	Signal Type	Description	PID Drawing No.	Processor Cabinet No.	Rack/Slot/Channel	Comments	Remark
P-00-HS-310D	DO	120VAC	Primary Influent Pump Start/Stop Command	I-195	DCS I/O Cabinet (Located At MCC-3 BLDG)	By Contractor		
P-00-HS-320D	DO	120VAC	Primary Effluent Pump Start/Stop Command	I-195	DCS I/O Cabinet (Located At MCC-3 BLDG)	By Contractor		
P-00-LAH-1301D	DI	24VDC	Acetic Acid Storage Tank And Dosing Pumps Containment Area Leak Alarm	I-195	DCS I/O Cabinet (Located At MCC-3 BLDG)	By Contractor		
P-00-LAH-1321D	DI	24VDC	Liquid Ammonium Sulfate Storage Tank And Dosing Pumps Containment Area Leak Alarm	I-195	DCS I/O Cabinet (Located At MCC-3 BLDG)	By Contractor		
P-00-LAH-1401D	DI	24VDC	Sodium Hypochlorite Storage Tank And Dosing Pumps Containment Area Leak Alarm	I-195	DCS I/O Cabinet (Located At MCC-3 BLDG)	By Contractor		
P-00-LAH-1441D	DI	24VDC	Sulfuric Acid Storage Tank And Dosing Pumps Containment Area Leak Alarm	I-195	DCS I/O Cabinet (Located At MCC-3 BLDG)	By Contractor		
P-00-LAH-1501D	DI	24VDC	Sodium Bisulfate Storage Tank And Dosing Pumps Containment Area Leak Alarm	I-195	DCS I/O Cabinet (Located At MCC-3 BLDG)	By Contractor		
P-00-LAH-1541D	DI	24VDC	Citric Acid Storage Tank And Transfer Pumps Containment Area Leak Alarm	I-195	DCS I/O Cabinet (Located At MCC-3 BLDG)	By Contractor		
P-00-LAH-1601D	DI	24VDC	Sodium Hydroxide Storage Tank And Dosing Pumps Containment Area Leak Alarm	I-195	DCS I/O Cabinet (Located At MCC-3 BLDG)	By Contractor		
P-00-LAHH-1300D	DI	24VDC	Acetic Acid Storage Tank Level Alarm High High	I-195	DCS I/O Cabinet (Located At MCC-3 BLDG)	By Contractor		
P-00-LAHH-1320D	DI	24VDC	Liquid Ammonium Sulfate Storage Tank Level Alarm High High	I-195	DCS I/O Cabinet (Located At MCC-3 BLDG)	By Contractor		
P-00-LAHH-1400D	DI	24VDC	Sodium Hypochlorite Storage Tank Level Alarm High High	I-195	DCS I/O Cabinet (Located At MCC-3 BLDG)	By Contractor		
P-00-LAHH-1440D	DI	24VDC	Sulfuric Acid Storage Tank Level Alarm High High	I-195	DCS I/O Cabinet (Located At MCC-3 BLDG)	By Contractor		
P-00-LAHH-1500D	DI	24VDC	Sodium Bisulfate Storage Tank Level Alarm High High	I-195	DCS I/O Cabinet (Located At MCC-3 BLDG)	By Contractor		
P-00-LAHH-1540D	DI	24VDC	Citric Acid Storage Tank Level Alarm High High	I-195	DCS I/O Cabinet (Located At MCC-3 BLDG)	By Contractor		
P-00-LAHH-1600D	DI	24VDC	Sodium Hydroxide Storage Tank Level Alarm High High	I-195	DCS I/O Cabinet (Located At MCC-3 BLDG)	By Contractor		
P-00-YA-310D	DI	24VDC	Primary Influent Pump Fail Alarm	I-195	DCS I/O Cabinet (Located At MCC-3 BLDG)	By Contractor		
P-00-YA-320D	DI	24VDC	Primary Effluent Pump Fail Alarm	I-195	DCS I/O Cabinet (Located At MCC-3 BLDG)	By Contractor		
P-00-YL-310D	DI	24VDC	Primary Influent Pump Run Status	I-195	DCS I/O Cabinet (Located At MCC-3 BLDG)	By Contractor		
P-00-YL-320D	DI	24VDC	Primary Effluent Pump Run Status	I-195	DCS I/O Cabinet (Located At MCC-3 BLDG)	By Contractor		
P-00-YA-1001D	DI	24VDC	Conventional RO (San Vicente Train) System Fail Alarm	I-196	DCS I/O Cabinet (Located At MCC-3 BLDG)	By Contractor		
P-00-YA-1100D	DI	24VDC	UV System No 1 (Murray Train) Fail Alarm	I-196	DCS I/O Cabinet (Located At MCC-3 BLDG)	By Contractor		
P-00-YA-400D	DI	24VDC	BNR System Fail Alarm	I-196	DCS I/O Cabinet (Located At MCC-3 BLDG)	By Contractor		
P-00-YA-450D	DI	24VDC	BNR Aeration Blower No 1 Fail Alarm	I-196	DCS I/O Cabinet (Located At MCC-3 BLDG)	By Contractor		
P-00-YA-460D	DI	24VDC	BNR Aeration Blower No 2 Fail Alarm	I-196	DCS I/O Cabinet (Located At MCC-3 BLDG)	By Contractor		
P-00-YA-500D	DI	24VDC	MBR System Master Control Fail Alarm	I-196	DCS I/O Cabinet (Located At MCC-3 BLDG)	By Contractor		
P-00-YA-700D	DI	24VDC	Ozone (Murray Train) System Fail Alarm	I-196	DCS I/O Cabinet (Located At MCC-3 BLDG)	By Contractor		
P-00-YA-800D	DI	24VDC	BAC (Murray Train) System Fail Alarm	I-196	DCS I/O Cabinet (Located At MCC-3 BLDG)	By Contractor		
P-00-YA-870D	DI	24VDC	MF (Murray Train) System Fail Alarm	I-196	DCS I/O Cabinet (Located At MCC-3 BLDG)	By Contractor		
P-00-YA-920D	DI	24VDC	Conventional RO (Murray Train) System Fail Alarm	I-196	DCS I/O Cabinet (Located At MCC-3 BLDG)	By Contractor		
P-00-YA-970D	DI	24VDC	CCRO (Closed Circuit RO Murray Train) System Fail Alarm	I-196	DCS I/O Cabinet (Located At MCC-3 BLDG)	By Contractor		
P-00-YA-990D	DI	24VDC	FRRO Forward-Reverse RO (Murray Train) System Fail Alarm	I-196	DCS I/O Cabinet (Located At MCC-3 BLDG)	By Contractor		
P-00-FAH-230D	DI	24VDC	Sodium Bisulfite Eyewash Shower Inlet Flow Alarm High	I-197	DCS I/O Cabinet (Located At MCC-3 BLDG)	By Contractor		
P-00-FAH-231D	DI	24VDC	Acetic Acid Eyewash Shower Inlet Flow Alarm High	I-197	DCS I/O Cabinet (Located At MCC-3 BLDG)	By Contractor		
P-00-FAH-232D	DI	24VDC	Sodium Hydroxide Eyewash Shower Inlet Flow Alarm High	I-197	DCS I/O Cabinet (Located At MCC-3 BLDG)	By Contractor		
P-00-FAH-233D	DI	24VDC	MBR CIP Chemicals Eyewash Shower Inlet Flow Alarm High	I-197	DCS I/O Cabinet (Located At MCC-3 BLDG)	By Contractor		
P-00-FAH-234D	DI	24VDC	Ozone Area Eyewash Shower Inlet Flow Alarm High	I-197	DCS I/O Cabinet (Located At MCC-3 BLDG)	By Contractor		
P-00-FAH-235D	DI	24VDC	Antiscalant And Sulfuric Acid Area Eyewash Shower Inlet Flow Alarm High	I-197	DCS I/O Cabinet (Located At MCC-3 BLDG)	By Contractor		
P-00-YA-1120D	DI	24VDC	UV System No 2 (Murray Train) System Fail Alarm	I-197	DCS I/O Cabinet (Located At MCC-3 BLDG)	By Contractor		

BAC VCP PLC

AI	7
DI	54
DO	12
DS	0
DSAO	2
DSDI	11
DSDO	3

IO Tag	I/O Type	Signal Type	Description	PID Drawing No.	Processor Cabinet No.	Rack/Slot/Channel	Comments	Remark
P-00-TI-004	AI	4-20mA	BAC VCP (Murray) Temperature Indicator	I-191	BAC VCP PLC	By Vendor		
P-00-XA-004	DI	24VDC	BAC VCP (Murray) Intrusion Alarm	I-191	BAC VCP PLC	By Vendor		
P-00-YA-004A	DI	24VDC	BAC VCP (Murray) PS1 24VDC Primary Power Fail Alarm	I-191	BAC VCP PLC	By Vendor		
P-00-YA-004B	DI	24VDC	BAC VCP (Murray) PS2 24VDC Secondary Power Fail Alarm	I-191	BAC VCP PLC	By Vendor		
P-00-YA-004C	DI	24VDC	BAC VCP (Murray) Redundancy Module Fail Alarm	I-191	BAC VCP PLC	By Vendor		
P-00-YA-004D	DI	24VDC	BAC VCP (Murray) Ethernet Switch Major Alarm	I-191	BAC VCP PLC	By Vendor		
P-00-HS-750	DSDO	EtherNet / IP	Ozone Product Pump Start/Stop Command	I-74	BAC VCP PLC	By Vendor		
P-00-II-750	DSAI	EtherNet / IP	Ozone Product Pump Current Indicator	I-74	BAC VCP PLC	By Vendor		
P-00-SI-750	DSAI	EtherNet / IP	Ozone Product Pump Speed Indicator	I-74	BAC VCP PLC	By Vendor		
P-00-SK-750	DSAO	EtherNet / IP	Ozone Product Pump Speed Setpoint	I-74	BAC VCP PLC	By Vendor		
P-00-TAH-750	DSDI	EtherNet / IP	Ozone Product Pump Temperature Alarm High	I-74	BAC VCP PLC	By Vendor		
P-00-YA-750A	DSDI	EtherNet / IP	Ozone Product Pump Fail Alarm	I-74	BAC VCP PLC	By Vendor		
P-00-YA-750B	DSDI	EtherNet / IP	Ozone Product Pump E-Stop Alarm	I-74	BAC VCP PLC	By Vendor		
P-00-YL-750B	DSDI	EtherNet / IP	Ozone Product Pump Run Status Indication	I-74	BAC VCP PLC	By Vendor		
P-00-ZL-750A	DSDI	EtherNet / IP	Ozone Product Pump Ready Status Indication	I-74	BAC VCP PLC	By Vendor		
P-00-FIT-804	AI	4-20mA	Filter No 1 Effluent Flow Indicating Transmitter	I-81	BAC VCP PLC	By Vendor		
P-00-FIT-814	AI	4-20mA	Filter No 2 Effluent Flow Indicating Transmitter	I-81	BAC VCP PLC	By Vendor		
P-00-HS-801	DO	120VAC	Filter No 1 Influent Supply Control Valve Open/Close Command	I-81	BAC VCP PLC	By Vendor		
P-00-HS-802	DO	120VAC	Filter No 1 Plant Drain Waste Valve Open/Close Command	I-81	BAC VCP PLC	By Vendor		
P-00-HS-803	DO	120VAC	Filter No 1 Air Supply Inlet Valve Open/Close Command	I-81	BAC VCP PLC	By Vendor		
P-00-HS-805	DO	120VAC	Filter No 1 Effluent Valve Open/Close Command	I-81	BAC VCP PLC	By Vendor		
P-00-HS-806	DO	120VAC	Filter No 1 Backwash Supply Control Valve Open/Close Command	I-81	BAC VCP PLC	By Vendor		
P-00-HS-811	DO	120VAC	Filter No 2 Influent Supply Control Valve Open/Close Command	I-81	BAC VCP PLC	By Vendor		
P-00-HS-812	DO	120VAC	Filter No 2 Plant Drain Waste Valve Open/Close Command	I-81	BAC VCP PLC	By Vendor		
P-00-HS-813	DO	120VAC	Filter No 2 Air Supply Inlet Valve Open/Close Command	I-81	BAC VCP PLC	By Vendor		
P-00-HS-815	DO	120VAC	Filter No 2 Effluent Valve Open/Close Command	I-81	BAC VCP PLC	By Vendor		
P-00-HS-816	DO	120VAC	Filter No 2 Backwash Supply Control Valve Open/Close Command	I-81	BAC VCP PLC	By Vendor		
P-00-LT-800	AI	4-20mA	Filter No 1 Level Transmitter	I-81	BAC VCP PLC	By Vendor		
P-00-LT-810	AI	4-20mA	Filter No 2 Level Transmitter	I-81	BAC VCP PLC	By Vendor		
P-00-PDIT-800	AI	4-20mA	Filter No 1 Differential Pressure Indicating Transmitter	I-81	BAC VCP PLC	By Vendor		
P-00-PDIT-810	AI	4-20mA	Filter No 2 Differential Pressure Indicating Transmitter	I-81	BAC VCP PLC	By Vendor		
P-00-YA-801	DI	24VDC	Filter No 1 Influent Supply Control Valve Fail Alarm	I-81	BAC VCP PLC	By Vendor		
P-00-YA-802	DI	24VDC	Filter No 1 Plant Drain Waste Valve Fail Alarm	I-81	BAC VCP PLC	By Vendor		
P-00-YA-803	DI	24VDC	Filter No 1 Air Supply Inlet Valve Fail Alarm	I-81	BAC VCP PLC	By Vendor		
P-00-YA-805	DI	24VDC	Filter No 1 Effluent Valve Fail Alarm	I-81	BAC VCP PLC	By Vendor		
P-00-YA-806	DI	24VDC	Filter No 1 Backwash Supply Control Valve Fail Alarm	I-81	BAC VCP PLC	By Vendor		
P-00-YA-811	DI	24VDC	Filter No 2 Influent Supply Control Valve Fail Alarm	I-81	BAC VCP PLC	By Vendor		
P-00-YA-812	DI	24VDC	Filter No 2 Plant Drain Waste Valve Fail Alarm	I-81	BAC VCP PLC	By Vendor		
P-00-YA-813	DI	24VDC	Filter No 2 Air Supply Inlet Valve Fail Alarm	I-81	BAC VCP PLC	By Vendor		
P-00-YA-815	DI	24VDC	Filter No 2 Effluent Valve Fail Alarm	I-81	BAC VCP PLC	By Vendor		

P-00-YA-816	DI	24VDC	Filter No 2 Backwash Supply Control Valve Fail Alarm	I-81	BAC VCP PLC	By Vendor		
P-00-ZL-801	DI	24VDC	Filter No 1 Influent Supply Control Valve Ready Status	I-81	BAC VCP PLC	By Vendor		
P-00-ZL-802	DI	24VDC	Filter No 1 Plant Drain Waste Valve Ready Status	I-81	BAC VCP PLC	By Vendor		
P-00-ZL-803	DI	24VDC	Filter No 1 Air Supply Inlet Valve Ready Status	I-81	BAC VCP PLC	By Vendor		
P-00-ZL-805	DI	24VDC	Filter No 1 Effluent Valve Ready Status	I-81	BAC VCP PLC	By Vendor		
P-00-ZL-806	DI	24VDC	Filter No 1 Backwash Supply Control Valve Ready Status	I-81	BAC VCP PLC	By Vendor		
P-00-ZL-811	DI	24VDC	Filter No 2 Influent Supply Control Valve Ready Status	I-81	BAC VCP PLC	By Vendor		
P-00-ZL-812	DI	24VDC	Filter No 2 Plant Drain Waste Valve Ready Status	I-81	BAC VCP PLC	By Vendor		
P-00-ZL-813	DI	24VDC	Filter No 2 Air Supply Inlet Valve Ready Status	I-81	BAC VCP PLC	By Vendor		
P-00-ZL-815	DI	24VDC	Filter No 2 Effluent Valve Ready Status	I-81	BAC VCP PLC	By Vendor		
P-00-ZL-816	DI	24VDC	Filter No 2 Backwash Supply Control Valve Ready Status	I-81	BAC VCP PLC	By Vendor		
P-00-ZLC-801	DI	24VDC	Filter No 1 Influent Supply Control Valve Closed Position Status	I-81	BAC VCP PLC	By Vendor		
P-00-ZLC-802	DI	24VDC	Filter No 1 Plant Drain Waste Valve Closed Position Status	I-81	BAC VCP PLC	By Vendor		
P-00-ZLC-803	DI	24VDC	Filter No 1 Air Supply Inlet Valve Closed Position Status	I-81	BAC VCP PLC	By Vendor		
P-00-ZLC-805	DI	24VDC	Filter No 1 Effluent Valve Closed Position Status	I-81	BAC VCP PLC	By Vendor		
P-00-ZLC-806	DI	24VDC	Filter No 1 Backwash Supply Control Valve Closed Position Status	I-81	BAC VCP PLC	By Vendor		
P-00-ZLC-811	DI	24VDC	Filter No 2 Influent Supply Control Valve Closed Position Status	I-81	BAC VCP PLC	By Vendor		
P-00-ZLC-812	DI	24VDC	Filter No 2 Plant Drain Waste Valve Closed Position Status	I-81	BAC VCP PLC	By Vendor		
P-00-ZLC-813	DI	24VDC	Filter No 2 Air Supply Inlet Valve Closed Position Status	I-81	BAC VCP PLC	By Vendor		
P-00-ZLC-815	DI	24VDC	Filter No 2 Effluent Valve Closed Position Status	I-81	BAC VCP PLC	By Vendor		
P-00-ZLC-816	DI	24VDC	Filter No 2 Backwash Supply Control Valve Closed Position Status	I-81	BAC VCP PLC	By Vendor		
P-00-ZLO-801	DI	24VDC	Filter No 1 Influent Supply Control Valve Open Position Status	I-81	BAC VCP PLC	By Vendor		
P-00-ZLO-802	DI	24VDC	Filter No 1 Plant Drain Waste Valve Open Position Status	I-81	BAC VCP PLC	By Vendor		
P-00-ZLO-803	DI	24VDC	Filter No 1 Air Supply Inlet Valve Open Position Status	I-81	BAC VCP PLC	By Vendor		
P-00-ZLO-805	DI	24VDC	Filter No 1 Effluent Valve Open Position Status	I-81	BAC VCP PLC	By Vendor		
P-00-ZLO-806	DI	24VDC	Filter No 1 Backwash Supply Control Valve Open Position Status	I-81	BAC VCP PLC	By Vendor		
P-00-ZLO-811	DI	24VDC	Filter No 2 Influent Supply Control Valve Open Position Status	I-81	BAC VCP PLC	By Vendor		
P-00-ZLO-812	DI	24VDC	Filter No 2 Plant Drain Waste Valve Open Position Status	I-81	BAC VCP PLC	By Vendor		
P-00-ZLO-813	DI	24VDC	Filter No 2 Air Supply Inlet Valve Open Position Status	I-81	BAC VCP PLC	By Vendor		
P-00-ZLO-815	DI	24VDC	Filter No 2 Effluent Valve Open Position Status	I-81	BAC VCP PLC	By Vendor		
P-00-ZLO-816	DI	24VDC	Filter No 2 Backwash Supply Control Valve Open Position Status	I-81	BAC VCP PLC	By Vendor		
P-00-FAL-860	DSDI	EtherNet / IP	MBR System Filtrate/Backwash Pump Flow Alarm Low	I-83	BAC VCP PLC	By Vendor		
P-00-HS-860A	DSDO	EtherNet / IP	MBR System Filtrate/Backwash Pump Start Command	I-83	BAC VCP PLC	By Vendor		
P-00-HS-860B	DSDO	EtherNet / IP	MBR System Filtrate/Backwash Pump Stop Command	I-83	BAC VCP PLC	By Vendor		
P-00-II-860	DSAI	EtherNet / IP	MBR System Filtrate/Backwash Pump Current Indicator	I-83	BAC VCP PLC	By Vendor		
P-00-SI-860	DSAI	EtherNet / IP	MBR System Filtrate/Backwash Pump Speed Indicator	I-83	BAC VCP PLC	By Vendor		
P-00-SK-860	DSAO	EtherNet / IP	MBR System Filtrate/Backwash Pump Speed Setpoint	I-83	BAC VCP PLC	By Vendor		
P-00-TAH-860	DSDI	EtherNet / IP	MBR System Filtrate/Backwash Pump Temperature Alarm High	I-83	BAC VCP PLC	By Vendor		
P-00-YA-860A	DSDI	EtherNet / IP	MBR System Filtrate/Backwash Pump Fail Alarm	I-83	BAC VCP PLC	By Vendor		
P-00-YA-860B	DSDI	EtherNet / IP	MBR System Filtrate/Backwash Pump E-Stop Alarm	I-83	BAC VCP PLC	By Vendor		
P-00-YL-860B	DSDI	EtherNet / IP	MBR System Filtrate/Backwash Pump Run Status	I-83	BAC VCP PLC	By Vendor		
P-00-ZL-860A	DSDI	EtherNet / IP	MBR System Filtrate/Backwash Pump Ready Status	I-83	BAC VCP PLC	By Vendor		
P-00-HS-870	DO	120VAC	BAC Air Scour Blower Start/Stop Command	I-84	BAC VCP PLC	By Vendor		
P-00-HS-871	DO	120VAC	BAC Air Scour Blower Discharge Air Vent Valve Open/Close Command	I-84	BAC VCP PLC	By Vendor		
P-00-TAH-870	DI	24VDC	BAC Air Scour Blower Temperature Alarm High	I-84	BAC VCP PLC	By Vendor		
P-00-YA-870	DI	24VDC	BAC Air Scour Blower Fail Alarm	I-84	BAC VCP PLC	By Vendor		
P-00-YA-870A	DI	24VDC	BAC Air Scour Blower E-Stop Alarm	I-84	BAC VCP PLC	By Vendor		
P-00-YA-871	DI	24VDC	BAC Air Scour Blower Discharge Air Vent Valve Fail Alarm	I-84	BAC VCP PLC	By Vendor		
P-00-YL-870	DI	24VDC	BAC Air Scour Blower Run Status	I-84	BAC VCP PLC	By Vendor		
P-00-ZL-870A	DI	24VDC	BAC Air Scour Blower Ready Status	I-84	BAC VCP PLC	By Vendor		
P-00-ZL-871	DI	24VDC	BAC Air Scour Blower Discharge Air Vent Valve Ready Status	I-84	BAC VCP PLC	By Vendor		

P-00-ZLC-871	DI	24VDC	BAC Air Scour Blower Discharge Air Vent Valve Closed Position Status	I-84	BAC VCP PLC	By Vendor		
P-00-ZLO-871	DI	24VDC	BAC Air Scour Blower Discharge Air Vent Valve Open Status Indication	I-84	BAC VCP PLC	By Vendor		

BNR VCP PLC

AI	19
AO	3
DI	33
DO	4
DS	0
DSAO	4
DSDI	27
DSDO	4

IO Tag	I/O Type	Signal Type	Description	PID Drawing No.	Processor Cabinet No.	Rack/Slot/Channel	Comments	Remark
P-00-TI-012	AI	4-20mA	BNR VCP Temperature Indicator	I-193	BNR VCP PLC	By Vendor		
P-00-XA-012	DI	24VDC	BNR VCP Intrusion Alarm	I-193	BNR VCP PLC	By Vendor		
P-00-YA-012A	DI	24VDC	BNR VCP PS1 24VDC Primary Power Fail Alarm	I-193	BNR VCP PLC	By Vendor		
P-00-YA-012B	DI	24VDC	BNR VCP PS1 24VDC Secondary Power Fail Alarm	I-193	BNR VCP PLC	By Vendor		
P-00-YA-012C	DI	24VDC	BNR VCP Redundancy Module Fail Alarm	I-193	BNR VCP PLC	By Vendor		
P-00-YA-012D	DI	24VDC	BNR VCP Ethernet Switch Major Alarm	I-193	BNR VCP PLC	By Vendor		
P-00-AIT-403	AI	4-20mA	Anoxic Zone 2 NO3 Analyzer Indicating Transmitter	I-41	BNR VCP PLC	By Vendor		
P-00-AIT-404	AI	4-20mA	Aerobic Zone 1 DO Analyzer Indicating Transmitter	I-41	BNR VCP PLC	By Vendor		
P-00-AIT-405	AI	4-20mA	Aerobic Zone 2 TSS Analyzer Indicating Transmitter	I-41	BNR VCP PLC	By Vendor		
P-00-AIT-406	AI	4-20mA	Aerobic Zone 2 DO Analyzer Indicating Transmitter	I-41	BNR VCP PLC	By Vendor		
P-00-AIT-407	AI	4-20mA	Aerobic Zone 2 NO3 Analyzer Indicating Transmitter	I-41	BNR VCP PLC	By Vendor		
P-00-AIT-408	AI	4-20mA	Aerobic Zone 2 PH Analyzer Indicating Transmitter	I-41	BNR VCP PLC	By Vendor		
P-00-AIT-410	AI	4-20mA	Aerobic Zone 2 NH3 Analyzer Indicating Transmitter	I-41	BNR VCP PLC	By Vendor		
P-00-FIT-423	AI	4-20mA	WAS Box To Drain Line Flow Indicating Transmitter	I-41	BNR VCP PLC	By Vendor		
P-00-HS-400	DO	120VAC	Deox Tank Mixer Start/Stop Command	I-41	BNR VCP PLC	By Vendor		
P-00-HS-401	DO	120VAC	Anoxic Zone 1 Mixer Start/Stop Command	I-41	BNR VCP PLC	By Vendor		
P-00-HS-402	DO	120VAC	Anoxic Zone 2 Mixer Start/Stop Command	I-41	BNR VCP PLC	By Vendor		
P-00-HS-422	DO	120VAC	Plant Utility Water Supply To Was Box Solenoid Valve On/Off Command	I-41	BNR VCP PLC	By Vendor		
P-00-LIT-409	AI	4-20mA	Biological Nutrient Removal Tank Level Indicating Transmitter	I-41	BNR VCP PLC	By Vendor		
P-00-LSHH-421	DI	24VDC	WAS Box Level Alarm High High	I-41	BNR VCP PLC	By Vendor		
P-00-TAH-400	DI	24VDC	Deox Tank Mixer Temperature Alarm High	I-41	BNR VCP PLC	By Vendor		
P-00-TAH-401	DI	24VDC	Anoxic Zone 1 Mixer Temperature Alarm High	I-41	BNR VCP PLC	By Vendor		
P-00-TAH-402	DI	24VDC	Anoxic Zone 2 Mixer Temperature Alarm High	I-41	BNR VCP PLC	By Vendor		
P-00-TIT-408	AI	4-20mA	Aerobic Zone 2 Temp Analyzer Indicating Transmitter	I-41	BNR VCP PLC	By Vendor		
P-00-YA-400	DI	24VDC	Deox Tank Mixer Fail Alarm	I-41	BNR VCP PLC	By Vendor		
P-00-YA-400A	DI	24VDC	Deox Tank Mixer E-Stop Alarm	I-41	BNR VCP PLC	By Vendor		
P-00-YA-401	DI	24VDC	Anoxic Zone 1 Mixer Fail Alarm	I-41	BNR VCP PLC	By Vendor		
P-00-YA-401A	DI	24VDC	Anoxic Zone 1 Mixer E-Stop Alarm	I-41	BNR VCP PLC	By Vendor		
P-00-YA-402	DI	24VDC	Anoxic Zone 2 Mixer Fail Alarm	I-41	BNR VCP PLC	By Vendor		
P-00-YA-402A	DI	24VDC	Anoxic Zone 2 Mixer E-Stop Alarm	I-41	BNR VCP PLC	By Vendor		
P-00-YA-420	DI	24VDC	WAS Gate Flow Control Valve Fail Alarm	I-41	BNR VCP PLC	By Vendor		
P-00-YL-400	DI	24VDC	Deox Tank Mixer Run Status Indication	I-41	BNR VCP PLC	By Vendor		
P-00-YL-401	DI	24VDC	Anoxic Zone 1 Mixer Run Status Indication	I-41	BNR VCP PLC	By Vendor		
P-00-YL-402	DI	24VDC	Anoxic Zone 2 Mixer Run Status Indication	I-41	BNR VCP PLC	By Vendor		
P-00-ZI-420	AI	4-20mA	WAS Gate Flow Control Valve Position Indicator	I-41	BNR VCP PLC	By Vendor		
P-00-ZK-420	AO	4-20mA	WAS Gate Flow Control Valve Position Setpoint	I-41	BNR VCP PLC	By Vendor		
P-00-ZL-400A	DI	24VDC	Deox Tank Mixer Ready Status Indication	I-41	BNR VCP PLC	By Vendor		
P-00-ZL-401A	DI	24VDC	Anoxic Zone 1 Mixer Ready Status Indication	I-41	BNR VCP PLC	By Vendor		
P-00-ZL-402A	DI	24VDC	Anoxic Zone 2 Mixer Ready Status Indication	I-41	BNR VCP PLC	By Vendor		

P-00-ZL-420	DI	24VDC	WAS Gate Flow Control Valve Ready Status Indication	I-41	BNR VCP PLC	By Vendor		
P-00-ZLC-420	DI	24VDC	WAS Gate Flow Control Valve Closed Position Status	I-41	BNR VCP PLC	By Vendor		
P-00-ZLO-420	DI	24VDC	WAS Gate Flow Control Valve Open Position Status	I-41	BNR VCP PLC	By Vendor		
P-00-FAH-440	DSDI	EtherNet / IP	IMLR Pump Flow Alarm High	I-42	BNR VCP PLC	By Vendor		
P-00-FIT-431	AI	4-20mA	ML Pump Discharge Flow Indicating Transmitter	I-42	BNR VCP PLC	By Vendor		
P-00-FIT-441	AI	4-20mA	IMLR Pump Discharge Flow Indicating Transmitter	I-42	BNR VCP PLC	By Vendor		
P-00-HS-430	DSDO	EtherNet / IP	ML Pump Start/Stop Command	I-42	BNR VCP PLC	By Vendor		
P-00-HS-440	DSDO	EtherNet / IP	IMLR Pump Start/Stop Command	I-42	BNR VCP PLC	By Vendor		
P-00-II-430	DSAI	EtherNet / IP	ML Pump Current Indicator	I-42	BNR VCP PLC	By Vendor		
P-00-II-440	DSAI	EtherNet / IP	IMLR Pump Current Indicator	I-42	BNR VCP PLC	By Vendor		
P-00-PAH-430	DSDI	EtherNet / IP	ML Pump Pressure Alarm High	I-42	BNR VCP PLC	By Vendor		
P-00-PAH-440	DSDI	EtherNet / IP	IMLR Pump Pressure Alarm High	I-42	BNR VCP PLC	By Vendor		
P-00-SI-430	DSAI	EtherNet / IP	ML Pump Speed Indicator	I-42	BNR VCP PLC	By Vendor		
P-00-SI-440	DSAI	EtherNet / IP	IMLR Pump Speed Indicator	I-42	BNR VCP PLC	By Vendor		
P-00-SK-430	DSAO	EtherNet / IP	ML Pump Speed Setpoint	I-42	BNR VCP PLC	By Vendor		
P-00-SK-440	DSAO	EtherNet / IP	IMLR Pump Speed Setpoint	I-42	BNR VCP PLC	By Vendor		
P-00-TAH-430	DSDI	EtherNet / IP	ML Pump Temperature Alarm High	I-42	BNR VCP PLC	By Vendor		
P-00-TAH-440	DSDI	EtherNet / IP	IMLR Pump Temperature Alarm High	I-42	BNR VCP PLC	By Vendor		
P-00-YA-430A	DSDI	EtherNet / IP	ML Pump Fail Alarm	I-42	BNR VCP PLC	By Vendor		
P-00-YA-430B	DSDI	EtherNet / IP	ML Pump E-Stop Alarm	I-42	BNR VCP PLC	By Vendor		
P-00-YA-440A	DSDI	EtherNet / IP	IMLR Pump Fail Alarm	I-42	BNR VCP PLC	By Vendor		
P-00-YA-440B	DSDI	EtherNet / IP	IMLR Pump E-Stop Alarm	I-42	BNR VCP PLC	By Vendor		
P-00-YL-430B	DSDI	EtherNet / IP	ML Pump Run Status Indication	I-42	BNR VCP PLC	By Vendor		
P-00-YL-440B	DSDI	EtherNet / IP	IMLR Pump Run Status Indication	I-42	BNR VCP PLC	By Vendor		
P-00-ZL-430A	DSDI	EtherNet / IP	ML Pump Ready Status Indication	I-42	BNR VCP PLC	By Vendor		
P-00-ZL-440A	DSDI	EtherNet / IP	IMLR Pump Ready Status Indication	I-42	BNR VCP PLC	By Vendor		
P-00-HS-450	DSDO	EtherNet / IP	Aeration Blower No 1 Start/Stop Command	I-43	BNR VCP PLC	By Vendor		
P-00-HS-460	DSDO	EtherNet / IP	Aeration Blower No 2 Start/Stop Command	I-43	BNR VCP PLC	By Vendor		
P-00-II-450	DSAI	EtherNet / IP	Aeration Blower No 1 Current Indicator	I-43	BNR VCP PLC	By Vendor		
P-00-II-460	DSAI	EtherNet / IP	Aeration Blower No 2 Current Indicator	I-43	BNR VCP PLC	By Vendor		
P-00-PAH-450	DSDI	EtherNet / IP	Aeration Blower No 1 Pressure Indicating Transmitter	I-43	BNR VCP PLC	By Vendor		
P-00-PAH-460	DSDI	EtherNet / IP	Aeration Blower No 2 Pressure Indicating Transmitter	I-43	BNR VCP PLC	By Vendor		
P-00-PIT-450B	AI	4-20mA	Aeration Blowers Discharge Pressure Indicating Transmitter	I-43	BNR VCP PLC	By Vendor		
P-00-SI-450	DSAI	EtherNet / IP	Aeration Blower No 1 Speed Indicator	I-43	BNR VCP PLC	By Vendor		
P-00-SI-460	DSAI	EtherNet / IP	Aeration Blower No 2 Speed Indicator	I-43	BNR VCP PLC	By Vendor		
P-00-SK-450	DSAO	EtherNet / IP	Aeration Blower No 1 Speed Setpoint	I-43	BNR VCP PLC	By Vendor		
P-00-SK-460	DSAO	EtherNet / IP	Aeration Blower No 2 Speed Setpoint	I-43	BNR VCP PLC	By Vendor		
P-00-TAH-450A	DSDI	EtherNet / IP	Aeration Blower No 1 Motor Temperature Indicating Transmitter	I-43	BNR VCP PLC	By Vendor		
P-00-TAH-450B	DSDI	EtherNet / IP	Aeration Blower No 1 Discharge Temperature Indicating Transmitter	I-43	BNR VCP PLC	By Vendor		
P-00-TAH-460A	DSDI	EtherNet / IP	Aeration Blower No 2 Motor Temperature Indicating Transmitter	I-43	BNR VCP PLC	By Vendor		
P-00-TAH-460B	DSDI	EtherNet / IP	Aeration Blower No 2 Discharge Temperature Indicating Transmitter	I-43	BNR VCP PLC	By Vendor		
P-00-YA-450A	DSDI	EtherNet / IP	Aeration Blower No 1 Fail Alarm	I-43	BNR VCP PLC	By Vendor		
P-00-YA-450B	DSDI	EtherNet / IP	Aeration Blower No 1 E-Stop Alarm	I-43	BNR VCP PLC	By Vendor		
P-00-YA-460A	DSDI	EtherNet / IP	Aeration Blower No 2 Fail Alarm	I-43	BNR VCP PLC	By Vendor		
P-00-YA-460B	DSDI	EtherNet / IP	Aeration Blower No 2 E-Stop Alarm	I-43	BNR VCP PLC	By Vendor		
P-00-YL-450B	DSDI	EtherNet / IP	Aeration Blower No 1 Run Status Indication	I-43	BNR VCP PLC	By Vendor		
P-00-YL-460B	DSDI	EtherNet / IP	Aeration Blower No 2 Run Status Indication	I-43	BNR VCP PLC	By Vendor		
P-00-ZL-450A	DSDI	EtherNet / IP	Aeration Blower No 1 Ready Status Indication	I-43	BNR VCP PLC	By Vendor		
P-00-ZL-460A	DSDI	EtherNet / IP	Aeration Blower No 2 Ready Status Indication	I-43	BNR VCP PLC	By Vendor		
P-00-FIT-461	AI	4-20mA	Aeration Blower Discharge Header Flow Indicating Transmitter No 1	I-44	BNR VCP PLC	By Vendor		
P-00-FIT-462	AI	4-20mA	Aeration Blower Discharge Header Flow Indicating Transmitter No 2	I-44	BNR VCP PLC	By Vendor		

P-00-YA-463	DI	24VDC	Aeration Blowers Discharge Header Flow Control Valve No 1 Fail Alarm	I-44	BNR VCP PLC	By Vendor		
P-00-YA-464	DI	24VDC	Aeration Blowers Discharge Header Flow Control Valve No 2 Fail Alarm	I-44	BNR VCP PLC	By Vendor		
P-00-ZI-463	AI	4-20mA	Aeration Blower Discharge Header Flow Control Valve No 1 Position Indicator	I-44	BNR VCP PLC	By Vendor		
P-00-ZI-464	AI	4-20mA	Aeration Blower Discharge Header Flow Control Valve No 2 Position Indicator	I-44	BNR VCP PLC	By Vendor		
P-00-ZK-463	AO	4-20mA	Aeration Blowers Discharge Header Flow Control Valve No 1 Position Setpoint	I-44	BNR VCP PLC	By Vendor		
P-00-ZK-464	AO	4-20mA	Aeration Blowers Discharge Header Flow Control Valve No 2 Position Setpoint	I-44	BNR VCP PLC	By Vendor		
P-00-ZL-463	DI	24VDC	Aeration Blowers Discharge Header Flow Control Valve No 1 Ready Status	I-44	BNR VCP PLC	By Vendor		
P-00-ZL-464	DI	24VDC	Aeration Blowers Discharge Header Flow Control Valve No 2 Ready Status	I-44	BNR VCP PLC	By Vendor		
P-00-ZLC-463	DI	24VDC	Aeration Blowers Discharge Header Flow Control Valve No 1 Closed Position Status	I-44	BNR VCP PLC	By Vendor		
P-00-ZLC-464	DI	24VDC	Aeration Blowers Discharge Header Flow Control Valve No 2 Closed Position Status	I-44	BNR VCP PLC	By Vendor		
P-00-ZLO-463	DI	24VDC	Aeration Blowers Discharge Header Flow Control Valve No 1 Open Position Status	I-44	BNR VCP PLC	By Vendor		
P-00-ZLO-464	DI	24VDC	Aeration Blowers Discharge Header Flow Control Valve No 2 Open Position Status	I-44	BNR VCP PLC	By Vendor		

CCRO VCP PLC

AI	1
DI	5

IO Tag	I/O Type	Signal Type	Description	PID Drawing No.	Processor Cabinet No.	Rack/Slot/Channel	Comments	Remark
P-00-TI-007	AI	4-20mA	CCRO VCP (Murray) Temperature Indicator	I-192	CCRO VCP PLC	By Vendor		
P-00-XA-007	DI	24VDC	CCRO VCP (Murray) Intrusion Alarm	I-192	CCRO VCP PLC	By Vendor		
P-00-YA-007A	DI	24VDC	CCRO VCP (Murray) PS1 24VDC Primary Power Fail Alarm	I-192	CCRO VCP PLC	By Vendor		
P-00-YA-007B	DI	24VDC	CCRO VCP (Murray) PS2 24VDC Secondary Power Fail Alarm	I-192	CCRO VCP PLC	By Vendor		
P-00-YA-007C	DI	24VDC	CCRO VCP (Murray) Ethernet Switch Major Alarm	I-192	CCRO VCP PLC	By Vendor		
P-00-YA-007D	DI	24VDC	CCRO VCP (Murray) Redundancy Module Fail Alarm	I-192	CCRO VCP PLC	By Vendor		

CCRO VCP PLC (Pre-Wired)

DI	8
DO	2
DS	0
DSAO	1
DSDI	6
DSDO	1

IO Tag	I/O Type	Signal Type	Description	PID Drawing No.	Processor Cabinet No.	Rack/Slot/Channel	Comments	Remark
P-00-FAL-970	DSDI	EtherNet / IP	CCRO Transfer Pump Discharge Low Flow Alarm	I-98	CCRO VCP PLC (Pre-Wired)	By Vendor		
P-00-HS-970	DSDO	EtherNet / IP	CCRO Transfer Pump Start/Stop Command	I-98	CCRO VCP PLC (Pre-Wired)	By Vendor		
P-00-HS-971	DO	120VAC	CCRO Transfer Pump Discharge Control Valve Open/Close Command	I-98	CCRO VCP PLC (Pre-Wired)	By Vendor		
P-00-HS-972	DO	120VAC	RO Flush Pump Discharge To CCRO RO Pilot System Inlet Control Valve Open/Close Command	I-98	CCRO VCP PLC (Pre-Wired)	By Vendor		
P-00-II-970	DSAI	EtherNet / IP	CCRO Transfer Pump Current Indicator	I-98	CCRO VCP PLC (Pre-Wired)	By Vendor		
P-00-SI-970	DSAI	EtherNet / IP	CCRO Transfer Pump Speed Indicator	I-98	CCRO VCP PLC (Pre-Wired)	By Vendor		
P-00-SK-970	DSAO	EtherNet / IP	CCRO Transfer Pump Speed Setpoint	I-98	CCRO VCP PLC (Pre-Wired)	By Vendor		
P-00-TSH-970	DSDI	EtherNet / IP	CCRO Transfer Pump Temperature Alarm High	I-98	CCRO VCP PLC (Pre-Wired)	By Vendor		
P-00-YA-970	DSDI	EtherNet / IP	CCRO Transfer Pump E-Stop Alarm	I-98	CCRO VCP PLC (Pre-Wired)	By Vendor		
P-00-YA-970A	DSDI	EtherNet / IP	CCRO Transfer Pump Fail Alarm	I-98	CCRO VCP PLC (Pre-Wired)	By Vendor		
P-00-YA-971	DI	24VDC	CCRO Transfer Pump Discharge Control Valve Fail Alarm	I-98	CCRO VCP PLC (Pre-Wired)	By Vendor		
P-00-YA-972	DI	24VDC	RO Flush Pump Discharge To CCRO RO Pilot System Inlet Control Valve Fail Alarm	I-98	CCRO VCP PLC (Pre-Wired)	By Vendor		
P-00-YL-970	DSDI	EtherNet / IP	CCRO Transfer Pump Run Status	I-98	CCRO VCP PLC (Pre-Wired)	By Vendor		
P-00-ZL-970	DSDI	EtherNet / IP	CCRO Transfer Pump Ready Status	I-98	CCRO VCP PLC (Pre-Wired)	By Vendor		
P-00-ZL-971	DI	24VDC	CCRO Transfer Pump Discharge Control Valve Ready Status	I-98	CCRO VCP PLC (Pre-Wired)	By Vendor		
P-00-ZL-972	DI	24VDC	RO Flush Pump Discharge To CCRO RO Pilot System Inlet Control Valve Ready Status	I-98	CCRO VCP PLC (Pre-Wired)	By Vendor		
P-00-ZLC-971	DI	24VDC	CCRO Transfer Pump Discharge Control Valve Closed Position Status	I-98	CCRO VCP PLC (Pre-Wired)	By Vendor		
P-00-ZLC-972	DI	24VDC	RO Flush Pump Discharge To CCRO RO Pilot System Inlet Control Valve Closed Position Status	I-98	CCRO VCP PLC (Pre-Wired)	By Vendor		
P-00-ZLO-971	DI	24VDC	CCRO Transfer Pump Discharge Control Valve Open Position Status	I-98	CCRO VCP PLC (Pre-Wired)	By Vendor		
P-00-ZLO-972	DI	24VDC	RO Flush Pump Discharge To CCRO RO Pilot System Inlet Control Valve Open Position Status	I-98	CCRO VCP PLC (Pre-Wired)	By Vendor		

Conventional RO VCP PLC (Murray) Pre-Wired

AI	22
AO	2
DI	12
DO	1
DS	0
DSAO	3
DSDI	18
DSDO	6

IO Tag	I/O Type	Signal Type	Description	PID Drawing No.	Processor Cabinet No.	Rack/Slot/Channel	Comments	Remark
P-00-AIT-935	AI	4-20mA	Murray RO System First Stage Membranes Conductivity Analyzer Indicating Transmitter	I-94	Conventional RO VCP PLC (Murray) Pre-Wired	By Vendor		
P-00-HS-930A	DSDO	EtherNet / IP	Murray RO System First Stage Feed Pump Start Command	I-94	Conventional RO VCP PLC (Murray) Pre-Wired	By Vendor		
P-00-HS-930B	DSDO	EtherNet / IP	Murray RO System First Stage Feed Pump Stop Command	I-94	Conventional RO VCP PLC (Murray) Pre-Wired	By Vendor		
P-00-II-930	DSAI	EtherNet / IP	Murray RO System First Stage Feed Pump Current Indicator	I-94	Conventional RO VCP PLC (Murray) Pre-Wired	By Vendor		
P-00-PAH-930	DSDI	EtherNet / IP	Murray RO System First Stage Feed Pump Pressure Alarm High	I-94	Conventional RO VCP PLC (Murray) Pre-Wired	By Vendor		
P-00-PAL-930	DSDI	EtherNet / IP	Murray RO System First Stage Feed Pump Pressure Alarm Low	I-94	Conventional RO VCP PLC (Murray) Pre-Wired	By Vendor		
P-00-PIT-931	AI	4-20mA	Murray RO System First Stage Feed Pump Discharge Pressure Indicating Transmitter	I-94	Conventional RO VCP PLC (Murray) Pre-Wired	By Vendor		
P-00-SI-930	DSAI	EtherNet / IP	Murray RO System First Stage Feed Pump Speed Indicator	I-94	Conventional RO VCP PLC (Murray) Pre-Wired	By Vendor		
P-00-SK-930	DSAO	EtherNet / IP	Murray RO System First Stage Feed Pump Speed Setpoint	I-94	Conventional RO VCP PLC (Murray) Pre-Wired	By Vendor		
P-00-TAH-930	DSDI	EtherNet / IP	Murray RO System First Stage Feed Pump Temperature Alarm High	I-94	Conventional RO VCP PLC (Murray) Pre-Wired	By Vendor		
P-00-YA-930A	DSDI	EtherNet / IP	Murray RO System First Stage Feed Pump Fail Alarm	I-94	Conventional RO VCP PLC (Murray) Pre-Wired	By Vendor		
P-00-YA-930B	DSDI	EtherNet / IP	Murray RO System First Stage Feed Pump E-Stop Alarm	I-94	Conventional RO VCP PLC (Murray) Pre-Wired	By Vendor		
P-00-YL-930	DSDI	EtherNet / IP	Murray RO System First Stage Feed Pump Run Status	I-94	Conventional RO VCP PLC (Murray) Pre-Wired	By Vendor		
P-00-ZL-930	DSDI	EtherNet / IP	Murray RO System First Stage Feed Pump Ready Status	I-94	Conventional RO VCP PLC (Murray) Pre-Wired	By Vendor		
P-00-AIT-945	AI	4-20mA	Murray RO system Second Stage Membranes Conductivity Analyzer Indicating Transmitter	I-95	Conventional RO VCP PLC (Murray) Pre-Wired	By Vendor		
P-00-FIT-941	AI	4-20mA	Murray RO System Second Stage Feed Pump Discharge Flow Indicating Transmitter	I-95	Conventional RO VCP PLC (Murray) Pre-Wired	By Vendor		
P-00-FIT-947	AI	4-20mA	Murray RO System Second Stage Membranes Discharge Flow Indicating Transmitter	I-95	Conventional RO VCP PLC (Murray) Pre-Wired	By Vendor		
P-00-HS-940A	DSDO	EtherNet / IP	Murray RO System Second Stage Feed Pump Start Command	I-95	Conventional RO VCP PLC (Murray) Pre-Wired	By Vendor		
P-00-HS-940B	DSDO	EtherNet / IP	Murray RO System Second Stage Feed Pump Stop Command	I-95	Conventional RO VCP PLC (Murray) Pre-Wired	By Vendor		
P-00-II-940	DSAI	EtherNet / IP	Murray RO System Second Stage Feed Pump Current Indicator	I-95	Conventional RO VCP PLC (Murray) Pre-Wired	By Vendor		
P-00-NSHH-946	DI	24VDC	Murray RO System Second Stage Membranes Discharge Control Valve Torque Alarm High High	I-95	Conventional RO VCP PLC (Murray) Pre-Wired	By Vendor		
P-00-PIT-940	AI	4-20mA	Murray RO System Second Stage Feed Pump Inlet Line Pressure Indicating Transmitter	I-95	Conventional RO VCP PLC (Murray) Pre-Wired	By Vendor		
P-00-PIT-941	AI	4-20mA	Murray RO System Second Stage Feed Pump Discharge Pressure Indicating Transmitter	I-95	Conventional RO VCP PLC (Murray) Pre-Wired	By Vendor		
P-00-PIT-946	AI	4-20mA	Murray RO System Second Stage Membranes Discharge Pressure Indicating Transmitter	I-95	Conventional RO VCP PLC (Murray) Pre-Wired	By Vendor		
P-00-SI-940	DSAI	EtherNet / IP	Murray RO System Second Stage Feed Pump Speed Indicator	I-95	Conventional RO VCP PLC (Murray) Pre-Wired	By Vendor		
P-00-SK-940	DSAO	EtherNet / IP	Murray RO System Second Stage Feed Pump Speed Setpoint	I-95	Conventional RO VCP PLC (Murray) Pre-Wired	By Vendor		
P-00-TAH-940	DSDI	EtherNet / IP	Murray RO System Second Stage Feed Pump Temperature Alarm High	I-95	Conventional RO VCP PLC (Murray) Pre-Wired	By Vendor		
P-00-YA-940A	DSDI	EtherNet / IP	Murray RO System Second Stage Feed Pump Fail Alarm	I-95	Conventional RO VCP PLC (Murray) Pre-Wired	By Vendor		
P-00-YA-940B	DSDI	EtherNet / IP	Murray RO System Second Stage Feed Pump E-Stop Alarm	I-95	Conventional RO VCP PLC (Murray) Pre-Wired	By Vendor		
P-00-YL-940	DSDI	EtherNet / IP	Murray RO System Second Stage Feed Pump Run Status	I-95	Conventional RO VCP PLC (Murray) Pre-Wired	By Vendor		
P-00-ZC-946	AO	4-20mA	Murray RO System Second Stage Membranes Discharge Control Valve Position Control	I-95	Conventional RO VCP PLC (Murray) Pre-Wired	By Vendor		
P-00-ZI-946	AI	4-20mA	Murray RO System Second Stage Membranes Discharge Control Valve Postion Indicator	I-95	Conventional RO VCP PLC (Murray) Pre-Wired	By Vendor		
P-00-ZL-940	DSDI	EtherNet / IP	Murray RO System Second Stage Feed Pump Ready Status	I-95	Conventional RO VCP PLC (Murray) Pre-Wired	By Vendor		
P-00-ZL-946	DI	24VDC	Murray RO System Second Stage Membranes Discharge Control Valve Ready Status	I-95	Conventional RO VCP PLC (Murray) Pre-Wired	By Vendor		
P-00-ZLC-946	DI	24VDC	Murray RO System Second Stage Membranes Discharge Control Valve Closed Position Status	I-95	Conventional RO VCP PLC (Murray) Pre-Wired	By Vendor		
P-00-ZLO-946	DI	24VDC	Murray RO System Second Stage Membranes Discharge Control Valve Open Position Status	I-95	Conventional RO VCP PLC (Murray) Pre-Wired	By Vendor		
P-00-AIT-951	AI	4-20mA	Murray RO System Third Stage Feed Pump Inlet Line PH Analyzer Indicating Transmitter	I-96	Conventional RO VCP PLC (Murray) Pre-Wired	By Vendor		
P-00-AIT-952	AI	4-20mA	Murray RO System Third Stage Feed Pump Inlet Line Conductivity Analyzer Indicating Transmitter	I-96	Conventional RO VCP PLC (Murray) Pre-Wired	By Vendor		
P-00-AIT-956	AI	4-20mA	Murray RO System Third Stage Membranes Discharge Conductivity Analyzer Indicating Transmitter	I-96	Conventional RO VCP PLC (Murray) Pre-Wired	By Vendor		
P-00-AIT-958	AI	4-20mA	Murray RO System Third Stage Membranes Discharge To Waste Conductivity Analyzer Indicating Transmitter	I-96	Conventional RO VCP PLC (Murray) Pre-Wired	By Vendor		
P-00-FIT-956	AI	4-20mA	Murray RO System Third Stage Membranes Discharge Flow Indicating Transmitter	I-96	Conventional RO VCP PLC (Murray) Pre-Wired	By Vendor		
P-00-FIT-958	AI	4-20mA	Murray RO System Third Stage Membranes Discharge To Waste Flow Indicating Transmitter	I-96	Conventional RO VCP PLC (Murray) Pre-Wired	By Vendor		
P-00-HS-950	DO	120VAC	Murray RO System Third Stage Feed Pump Inlet Supply Control Valve Open/Close Command	I-96	Conventional RO VCP PLC (Murray) Pre-Wired	By Vendor		
P-00-HS-955A	DSDO	EtherNet / IP	Murray RO System Third Stage Feed Pump Start Command	I-96	Conventional RO VCP PLC (Murray) Pre-Wired	By Vendor		
P-00-HS-955B	DSDO	EtherNet / IP	Murray RO System Third Stage Feed Pump Stop Command	I-96	Conventional RO VCP PLC (Murray) Pre-Wired	By Vendor		
P-00-II-955	DSAI	EtherNet / IP	Murray RO System Third Stage Feed Pump Current Indicator	I-96	Conventional RO VCP PLC (Murray) Pre-Wired	By Vendor		
P-00-NSHH-957	DI	24VDC	Murray RO System Third Stage Membranes Discharge Control Valve Torque Alarm High High	I-96	Conventional RO VCP PLC (Murray) Pre-Wired	By Vendor		
P-00-PAL-955	DSDI	EtherNet / IP	Murray RO System Third Stage Feed Pump Inlet Pressure Alarm Low	I-96	Conventional RO VCP PLC (Murray) Pre-Wired	By Vendor		
P-00-PIT-955	AI	4-20mA	Murray RO System Third Stage Feed Pump Discharge Pressure Indicating Transmitter	I-96	Conventional RO VCP PLC (Murray) Pre-Wired	By Vendor		
P-00-PIT-956	AI	4-20mA	Murray RO System Third Stage Feed Pump Discharge Pressure Indicating Transmitter	I-96	Conventional RO VCP PLC (Murray) Pre-Wired	By Vendor		
P-00-PIT-957	AI	4-20mA	Murray RO System Third Stage Membranes Discharge Pressure Indicating Transmitter	I-96	Conventional RO VCP PLC (Murray) Pre-Wired	By Vendor		
P-00-SI-955	DSAI	EtherNet / IP	Murray RO System Third Stage Feed Pump Speed Indicator	I-96	Conventional RO VCP PLC (Murray) Pre-Wired	By Vendor		
P-00-SK-955	DSAO	EtherNet / IP	Murray RO System Third Stage Feed Pump Speed Setpoint	I-96	Conventional RO VCP PLC (Murray) Pre-Wired	By Vendor		
P-00-TAH-955	DSDI	EtherNet / IP	Murray RO System Third Stage Feed Pump Temperature Alarm High	I-96	Conventional RO VCP PLC (Murray) Pre-Wired	By Vendor		

P-00-YA-950	DI	24VDC	Murray RO System Third Stage Feed Pump Inlet Supply Control Valve Fail Alarm	I-96	Conventional RO VCP PLC (Murray) Pre-Wired	By Vendor		
P-00-YA-955A	DSDI	EtherNet / IP	Murray RO System Third Stage Feed Pump Fail Alarm	I-96	Conventional RO VCP PLC (Murray) Pre-Wired	By Vendor		
P-00-YA-955B	DSDI	EtherNet / IP	Murray RO System Third Stage Feed Pump E-Stop Alarm	I-96	Conventional RO VCP PLC (Murray) Pre-Wired	By Vendor		
P-00-YL-955	DSDI	EtherNet / IP	Murray RO System Third Stage Feed Pump Run Status	I-96	Conventional RO VCP PLC (Murray) Pre-Wired	By Vendor		
P-00-ZC-957	AO	4-20mA	Murray RO System Third Stage Membranes Discharge Control Valve Position Control	I-96	Conventional RO VCP PLC (Murray) Pre-Wired	By Vendor		
P-00-ZI-957	AI	4-20mA	Murray RO System Third Stage Membranes Discharge Control Valve Position Indicator	I-96	Conventional RO VCP PLC (Murray) Pre-Wired	By Vendor		
P-00-ZL-950	DI	24VDC	Murray RO System Third Stage Feed Pump Inlet Supply Control Valve Ready Status	I-96	Conventional RO VCP PLC (Murray) Pre-Wired	By Vendor		
P-00-ZL-955	DSDI	EtherNet / IP	Murray RO System Third Stage Feed Pump Ready Status	I-96	Conventional RO VCP PLC (Murray) Pre-Wired	By Vendor		
P-00-ZL-957	DI	24VDC	Murray RO System Third Stage Membranes Discharge Control Valve Ready Status	I-96	Conventional RO VCP PLC (Murray) Pre-Wired	By Vendor		
P-00-ZLC-950	DI	24VDC	Murray RO System Third Stage Feed Pump Inlet Supply Control Valve Closed Position Status	I-96	Conventional RO VCP PLC (Murray) Pre-Wired	By Vendor		
P-00-ZLC-957	DI	24VDC	Murray RO System Third Stage Membranes Discharge Control Valve Closed Position Status	I-96	Conventional RO VCP PLC (Murray) Pre-Wired	By Vendor		
P-00-ZLO-950	DI	24VDC	Murray RO System Third Stage Feed Pump Inlet Supply Control Valve Open Position Status	I-96	Conventional RO VCP PLC (Murray) Pre-Wired	By Vendor		
P-00-ZLO-957	DI	24VDC	Murray RO System Third Stage Membranes Discharge Control Valve Open Position Status	I-96	Conventional RO VCP PLC (Murray) Pre-Wired	By Vendor		
P-00-AIT-961	AI	4-20mA	Murray RO Combined Permeate Conductivity Analyzer Indicating Transmitter	I-97	Conventional RO VCP PLC (Murray) Pre-Wired	By Vendor		
P-00-FIT-963	AI	4-20mA	Murray RO System Stage 1 and 2 Common Discharge Header Flow Indicating Transmitter	I-97	Conventional RO VCP PLC (Murray) Pre-Wired	By Vendor		
P-00-PIT-963	AI	4-20mA	Murray RO System Stage 1 and 2 Common Discharge Header Pressure Indicating Transmitter	I-97	Conventional RO VCP PLC (Murray) Pre-Wired	By Vendor		

Conventional RO VCP PLC (Murray)

AI	8
DI	27
DO	5

IO Tag	I/O Type	Signal Type	Description	PID Drawing No.	Processor Cabinet No.	Rack/Slot/Channel	Comments	Remark
P-00-TI-006	AI	4-20mA	Conventional RO VCP (Murray) Temperature Indicator	I-192	Conventional RO VCP PLC (Murray)	By Vendor		
P-00-XA-006	DI	24VDC	Conventional RO VCP (Murray) Intrusion Alarm	I-192	Conventional RO VCP PLC (Murray)	By Vendor		
P-00-YA-006A	DI	24VDC	Conventional RO VCP (Murray) PS1 24VDC Primary Power Fail Alarm	I-192	Conventional RO VCP PLC (Murray)	By Vendor		
P-00-YA-006B	DI	24VDC	Conventional RO VCP (Murray) PS2 24VDC Secondary Power Fail Alarm	I-192	Conventional RO VCP PLC (Murray)	By Vendor		
P-00-YA-006C	DI	24VDC	Conventional RO VCP (Murray) Redundancy Module Fail Alarm	I-192	Conventional RO VCP PLC (Murray)	By Vendor		
P-00-YA-006D	DI	24VDC	Conventional RO VCP (Murray) Ethernet Switch Major Alarm	I-192	Conventional RO VCP PLC (Murray)	By Vendor		
P-00-FAL-910	DI	24VDC	Murray Conventaional RO Transfer Pump Flow Alarm Low	I-92	Conventional RO VCP PLC (Murray)	By Vendor		
P-00-HS-910	DO	120VAC	Murray Conventaional RO Transfer Pump Start/Stop Command	I-92	Conventional RO VCP PLC (Murray)	By Vendor		
P-00-HS-911	DO	120VAC	Murray Conventaional RO Transfer Pump Discharge Control Valve Start/Stop Command	I-92	Conventional RO VCP PLC (Murray)	By Vendor		
P-00-HS-912	DO	120VAC	Flow Flush Tank Control Valve Start/Stop Command	I-92	Conventional RO VCP PLC (Murray)	By Vendor		
P-00-TAH-910	DI	24VDC	Murray Conventaional RO Transfer Pump Temperature Alarm High	I-92	Conventional RO VCP PLC (Murray)	By Vendor		
P-00-YA-910A	DI	24VDC	Murray Conventaional RO Transfer Pump Fail Alarm	I-92	Conventional RO VCP PLC (Murray)	By Vendor		
P-00-YA-910B	DI	24VDC	Murray Conventaional RO Transfer Pump E-Stop Alarm	I-92	Conventional RO VCP PLC (Murray)	By Vendor		
P-00-YA-911	DI	24VDC	Murray Conventaional RO Transfer Pump Discharge Control Valve Fail Alarm	I-92	Conventional RO VCP PLC (Murray)	By Vendor		
P-00-YA-912	DI	24VDC	Flow Flush Tank Control Valve Fail Alarm	I-92	Conventional RO VCP PLC (Murray)	By Vendor		
P-00-YL-910	DI	24VDC	Murray Conventaional RO Transfer Pump Run Status	I-92	Conventional RO VCP PLC (Murray)	By Vendor		
P-00-ZL-910	DI	24VDC	Murray Conventaional RO Transfer Pump Ready Status	I-92	Conventional RO VCP PLC (Murray)	By Vendor		
P-00-ZL-911	DI	24VDC	Murray Conventaional RO Transfer Pump Discharge Control Valve Ready Status	I-92	Conventional RO VCP PLC (Murray)	By Vendor		
P-00-ZL-912	DI	24VDC	Flow Flush Tank Control Valve Ready Status	I-92	Conventional RO VCP PLC (Murray)	By Vendor		
P-00-ZLC-911	DI	24VDC	Murray Conventaional RO Transfer Pump Discharge Control Valve Closed Position Status	I-92	Conventional RO VCP PLC (Murray)	By Vendor		
P-00-ZLC-912	DI	24VDC	Flow Flush Tank Control Valve Closed Position Status	I-92	Conventional RO VCP PLC (Murray)	By Vendor		
P-00-ZLO-911	DI	24VDC	Murray Conventaional RO Transfer Pump Discharge Control Valve Open Position Status	I-92	Conventional RO VCP PLC (Murray)	By Vendor		
P-00-ZLO-912	DI	24VDC	Flow Flush Tank Control Valve Open Position Status	I-92	Conventional RO VCP PLC (Murray)	By Vendor		
P-00-AIT-922	AI	4-20mA	Murray RO System Cartridge Filter Inlet Line ORP Analyzer Indicating Transmitter	I-93	Conventional RO VCP PLC (Murray)	By Vendor		
P-00-AIT-923	AI	4-20mA	Murray RO System Cartridge Filter Discharge PH Analyzer Indicating Transmitter	I-93	Conventional RO VCP PLC (Murray)	By Vendor		
P-00-AIT-924	AI	4-20mA	Murray RO System Cartridge Filter Discharge Conductivity Analyzer Indicating Transmitter	I-93	Conventional RO VCP PLC (Murray)	By Vendor		
P-00-FIT-922	AI	4-20mA	Murray RO System Cartridge Filter Inlet Line Flow Indicating Transmitter	I-93	Conventional RO VCP PLC (Murray)	By Vendor		
P-00-HS-920	DO	120VAC	Murray Conventional RO System Cartridge Filter Inlet Supply Control Valve Open/Close Command	I-93	Conventional RO VCP PLC (Murray)	By Vendor		
P-00-HS-921	DO	120VAC	Murray Conventional RO Transfer Pump Discharge To RO System Stage 3 Control Valve Open/Close Command	I-93	Conventional RO VCP PLC (Murray)	By Vendor		
P-00-PIT-922	AI	4-20mA	Murray RO System Cartridge Filter Inlet Line Pressure Indicating Transmitter	I-93	Conventional RO VCP PLC (Murray)	By Vendor		
P-00-PIT-923	AI	4-20mA	Murray RO System Cartridge Filter Discharge Pressure Indicating Transmitter	I-93	Conventional RO VCP PLC (Murray)	By Vendor		
P-00-TIT-923	AI	4-20mA	Murray RO System Cartridge Filter Discharge Temperature Indicating Transmitter	I-93	Conventional RO VCP PLC (Murray)	By Vendor		
P-00-YA-920	DI	24VDC	Murray Conventional RO System Cartridge Filter Inlet Supply Control Valve Fail Alarm	I-93	Conventional RO VCP PLC (Murray)	By Vendor		
P-00-YA-921	DI	24VDC	Murray Conventional RO Transfer Pump Discharge To RO System Stage 3 Control Valve Fail Alarm	I-93	Conventional RO VCP PLC (Murray)	By Vendor		
P-00-ZL-920	DI	24VDC	Murray Conventional RO System Cartridge Filter Inlet Supply Control Valve Ready Status	I-93	Conventional RO VCP PLC (Murray)	By Vendor		
P-00-ZL-921	DI	24VDC	Murray Conventional RO Transfer Pump Discharge To RO System Stage 3 Control Valve Ready Status	I-93	Conventional RO VCP PLC (Murray)	By Vendor		
P-00-ZLC-920	DI	24VDC	Murray Conventional RO System Cartridge Filter Inlet Supply Control Valve Closed Position Status	I-93	Conventional RO VCP PLC (Murray)	By Vendor		
P-00-ZLC-921	DI	24VDC	Murray Conventional RO Transfer Pump Discharge To RO System Stage 3 Control Valve Closed Position Status	I-93	Conventional RO VCP PLC (Murray)	By Vendor		
P-00-ZLO-920	DI	24VDC	Murray Conventional RO System Cartridge Filter Inlet Supply Control Valve Open Position Status	I-93	Conventional RO VCP PLC (Murray)	By Vendor		
P-00-ZLO-921	DI	24VDC	Murray Conventional RO Transfer Pump Discharge To RO System Stage 3 Control Valve Open Position Status	I-93	Conventional RO VCP PLC (Murray)	By Vendor		

Conventional RO VCP PLC (San Vicente)

AI	10
DI	28
DO	5

IO Tag	I/O Type	Signal Type	Description	PID Drawing No.	Processor Cabinet No.	Rack/Slot/Channel	Comments	Remark
P-00-AIT-1003	AI	4-20mA	San Vicente Conventional RO Transfer Pump Discharge Total Chlorine Analyzer Indicating Transmitter	I-100	Conventional RO VCP PLC (San Vicente)	By Vendor		
P-00-AIT-1004	AI	4-20mA	San Vicente Conventional RO Transfer Pump Discharge NH3 Analyzer Indicating Transmitter	I-100	Conventional RO VCP PLC (San Vicente)	By Vendor		
P-00-FAL-1000	DI	24VDC	San Vicente Conventional RO Transfer Pump Discharge Low Flow Alarm	I-100	Conventional RO VCP PLC (San Vicente)	By Vendor		
P-00-FSL-1003	DI	24VDC	RO Feed Analyzer Panel Sample Inlet Low Flow Alarm	I-100	Conventional RO VCP PLC (San Vicente)	By Vendor		
P-00-HS-1000	DO	120VAC	San Vicente Conventional RO Transfer Pump Start/Stop Command	I-100	Conventional RO VCP PLC (San Vicente)	By Vendor		
P-00-HS-1001	DO	120VAC	San Vicente Conventional RO Transfer Pump Discharge Control Valve Open/Close Command	I-100	Conventional RO VCP PLC (San Vicente)	By Vendor		
P-00-HS-1002	DO	120VAC	RO Flush Pump Discharge To RO Feed Control Valve Open/Close Command	I-100	Conventional RO VCP PLC (San Vicente)	By Vendor		
P-00-TAH-1000	DI	24VDC	San Vicente Conventional RO Transfer Pump Temperature Alarm High	I-100	Conventional RO VCP PLC (San Vicente)	By Vendor		
P-00-YA-1000A	DI	24VDC	San Vicente Conventional RO Transfer Pump Fail Alarm	I-100	Conventional RO VCP PLC (San Vicente)	By Vendor		
P-00-YA-1000B	DI	24VDC	San Vicente Conventional RO Transfer Pump E-Stop Alarm	I-100	Conventional RO VCP PLC (San Vicente)	By Vendor		
P-00-YA-1001	DI	24VDC	San Vicente Conventional RO Transfer Pump Discharge Control Valve Fail Alarm	I-100	Conventional RO VCP PLC (San Vicente)	By Vendor		
P-00-YA-1002	DI	24VDC	RO Flush Pump Discharge To RO Feed Control Valve Fail Alarm	I-100	Conventional RO VCP PLC (San Vicente)	By Vendor		
P-00-YL-1000	DI	24VDC	San Vicente Conventional RO Transfer Pump Run Status	I-100	Conventional RO VCP PLC (San Vicente)	By Vendor		
P-00-ZL-1000	DI	24VDC	San Vicente Conventional RO Transfer Pump Ready Status	I-100	Conventional RO VCP PLC (San Vicente)	By Vendor		
P-00-ZL-1001	DI	24VDC	San Vicente Conventional RO Transfer Pump Discharge Control Valve Ready Status	I-100	Conventional RO VCP PLC (San Vicente)	By Vendor		
P-00-ZL-1002	DI	24VDC	RO Flush Pump Discharge To RO Feed Control Valve Ready Status	I-100	Conventional RO VCP PLC (San Vicente)	By Vendor		
P-00-ZLC-1001	DI	24VDC	San Vicente Conventional RO Transfer Pump Discharge Control Valve Closed Position Status	I-100	Conventional RO VCP PLC (San Vicente)	By Vendor		
P-00-ZLC-1002	DI	24VDC	RO Flush Pump Discharge To RO Feed Control Valve Closed Position Status	I-100	Conventional RO VCP PLC (San Vicente)	By Vendor		
P-00-ZLO-1001	DI	24VDC	San Vicente Conventional RO Transfer Pump Discharge Control Valve Open Position Status	I-100	Conventional RO VCP PLC (San Vicente)	By Vendor		
P-00-ZLO-1002	DI	24VDC	RO Flush Pump Discharge To RO Feed Control Valve Open Position Status	I-100	Conventional RO VCP PLC (San Vicente)	By Vendor		
P-00-AIT-1022	AI	4-20mA	San Vicente RO System Cartridge Filter Inlet ORP Analyzer Indicating Transmitter	I-101	Conventional RO VCP PLC (San Vicente)	By Vendor		
P-00-AIT-1023	AI	4-20mA	San Vicente RO System Cartridge Filter Discharge PH Analyzer Indicating Transmitter	I-101	Conventional RO VCP PLC (San Vicente)	By Vendor		
P-00-AIT-1024	AI	4-20mA	San Vicente RO System Cartridge Filter Discharge Conductivity Analyzer Indicating Transmitter	I-101	Conventional RO VCP PLC (San Vicente)	By Vendor		
P-00-FIT-1022	AI	4-20mA	San Vicente RO System Cartridge Filter Inlet Flow Indicating Transmitter	I-101	Conventional RO VCP PLC (San Vicente)	By Vendor		
P-00-HS-1020	DO	120VAC	San Vicente RO System Cartridge Filter Inlet Supply Control Valve Open/Close Command	I-101	Conventional RO VCP PLC (San Vicente)	By Vendor		
P-00-HS-1021	DO	120VAC	San Vicente RO System Stage 3 Inlet Supply Control Valve Open/Close Command	I-101	Conventional RO VCP PLC (San Vicente)	By Vendor		
P-00-PIT-1022	AI	4-20mA	San Vicente RO System Cartridge Filter Inlet Pressure Indicating Transmitter	I-101	Conventional RO VCP PLC (San Vicente)	By Vendor		
P-00-PIT-1023	AI	4-20mA	San Vicente RO System Cartridge Filter Discharge Pressure Indicating Transmitter	I-101	Conventional RO VCP PLC (San Vicente)	By Vendor		
P-00-TIT-1023	AI	4-20mA	San Vicente RO System Cartridge Filter Discharge Temperature Indicating Transmitter	I-101	Conventional RO VCP PLC (San Vicente)	By Vendor		
P-00-YA-1020	DI	24VDC	San Vicente RO System Cartridge Filter Inlet Supply Control Valve Fail Alarm	I-101	Conventional RO VCP PLC (San Vicente)	By Vendor		
P-00-YA-1021	DI	24VDC	San Vicente RO System Stage 3 Inlet Supply Control Valve Fail Alarm	I-101	Conventional RO VCP PLC (San Vicente)	By Vendor		
P-00-ZL-1020	DI	24VDC	San Vicente RO System Cartridge Filter Inlet Supply Control Valve Ready Status	I-101	Conventional RO VCP PLC (San Vicente)	By Vendor		
P-00-ZL-1021	DI	24VDC	San Vicente RO System Stage 3 Inlet Supply Control Valve Ready Status	I-101	Conventional RO VCP PLC (San Vicente)	By Vendor		
P-00-ZLC-1020	DI	24VDC	San Vicente RO System Cartridge Filter Inlet Supply Control Valve Closed Position Status	I-101	Conventional RO VCP PLC (San Vicente)	By Vendor		
P-00-ZLC-1021	DI	24VDC	San Vicente RO System Stage 3 Inlet Supply Control Valve Closed Position Status	I-101	Conventional RO VCP PLC (San Vicente)	By Vendor		
P-00-ZLO-1020	DI	24VDC	San Vicente RO System Cartridge Filter Inlet Supply Control Valve Open Position Status	I-101	Conventional RO VCP PLC (San Vicente)	By Vendor		
P-00-ZLO-1021	DI	24VDC	San Vicente RO System Stage 3 Inlet Supply Control Valve Open Position Status	I-101	Conventional RO VCP PLC (San Vicente)	By Vendor		
P-00-TI-009	AI	4-20mA	Conventional RO VCP (San Vicente) Temperature Indicator	I-192	Conventional RO VCP PLC (San Vicente)	By Vendor		
P-00-XA-009	DI	24VDC	Conventional RO VCP (San Vicente) Intrusion Alarm	I-192	Conventional RO VCP PLC (San Vicente)	By Vendor		
P-00-YA-009A	DI	24VDC	Conventional RO VCP (San Vicente) PS1 24VDC Primary Power Fail Alarm	I-192	Conventional RO VCP PLC (San Vicente)	By Vendor		
P-00-YA-009B	DI	24VDC	Conventional RO VCP (San Vicente) PS2 24VDC Secondary Power Fail Alarm	I-192	Conventional RO VCP PLC (San Vicente)	By Vendor		
P-00-YA-009C	DI	24VDC	Conventional RO VCP (San Vicente) Redundancy Module Fail Alarm	I-192	Conventional RO VCP PLC (San Vicente)	By Vendor		
P-00-YA-009D	DI	24VDC	Conventional RO VCP (San Vicente) Ethernet Switch Major Alarm	I-192	Conventional RO VCP PLC (San Vicente)	By Vendor		

Conventional RO VCP PLC (San Vicente) Pre-Wired

AI	22
AO	2
DI	12
DO	1
DS	0
DSAO	3
DSDI	18
DSDO	6

IO Tag	I/O Type	Signal Type	Description	PID Drawing No.	Processor Cabinet No.	Rack/Slot/Channel	Comments	Remark
P-00-AIT-1035	AI	4-20mA	San Vicente RO System First Stage Membranes Discharge Conductivity Analyzer Indicating Transmitter	I-102	Conventional RO VCP PLC (San Vicente) Pre-Wired	By Vendor		
P-00-HS-1030A	DSDO	EtherNet / IP	San Vicente RO System First Stage Feed Pump Start Command	I-102	Conventional RO VCP PLC (San Vicente) Pre-Wired	By Vendor		
P-00-HS-1030B	DSDO	EtherNet / IP	San Vicente RO System First Stage Feed Pump Stop Command	I-102	Conventional RO VCP PLC (San Vicente) Pre-Wired	By Vendor		
P-00-II-1030	DSAI	EtherNet / IP	San Vicente RO System First Stage Feed Pump Current Indicator	I-102	Conventional RO VCP PLC (San Vicente) Pre-Wired	By Vendor		
P-00-PAH-1030	DSDI	EtherNet / IP	San Vicente RO System First Stage Feed Pump Discharge Pressure Alarm High	I-102	Conventional RO VCP PLC (San Vicente) Pre-Wired	By Vendor		
P-00-PAL-1030	DSDI	EtherNet / IP	San Vicente RO System First Stage Feed Pump Inlet Pressure Alarm Low	I-102	Conventional RO VCP PLC (San Vicente) Pre-Wired	By Vendor		
P-00-PIT-1031	AI	4-20mA	San Vicente RO System First Stage Feed Pump Discharge Pressure Indicating Transmitter	I-102	Conventional RO VCP PLC (San Vicente) Pre-Wired	By Vendor		
P-00-SI-1030	DSAI	EtherNet / IP	San Vicente RO System First Stage Feed Pump Speed Indicator	I-102	Conventional RO VCP PLC (San Vicente) Pre-Wired	By Vendor		
P-00-SK-1030	DSAO	EtherNet / IP	San Vicente RO System First Stage Feed Pump Speed Setpoint	I-102	Conventional RO VCP PLC (San Vicente) Pre-Wired	By Vendor		
P-00-TAH-1030	DSDI	EtherNet / IP	San Vicente RO System First Stage Feed Pump Temperature Alarm High	I-102	Conventional RO VCP PLC (San Vicente) Pre-Wired	By Vendor		
P-00-YA-1030A	DSDI	EtherNet / IP	San Vicente RO System First Stage Feed Pump Fail Alarm	I-102	Conventional RO VCP PLC (San Vicente) Pre-Wired	By Vendor		
P-00-YA-1030B	DSDI	EtherNet / IP	San Vicente RO System First Stage Feed Pump E-Stop Alarm	I-102	Conventional RO VCP PLC (San Vicente) Pre-Wired	By Vendor		
P-00-YL-1030	DSDI	EtherNet / IP	San Vicente RO System First Stage Feed Pump Run Status	I-102	Conventional RO VCP PLC (San Vicente) Pre-Wired	By Vendor		
P-00-ZL-1030	DSDI	EtherNet / IP	San Vicente RO System First Stage Feed Pump Ready Status	I-102	Conventional RO VCP PLC (San Vicente) Pre-Wired	By Vendor		
P-00-AIT-1045	AI	4-20mA	San Vicente RO System Second Stage Membranes Discharge Conductivity Analyzer Indicating Transmitter	I-103	Conventional RO VCP PLC (San Vicente) Pre-Wired	By Vendor		
P-00-FIT-1041	AI	4-20mA	San Vicente RO System Second Stage Feed Pump Discharge Flow Indicating Transmitter	I-103	Conventional RO VCP PLC (San Vicente) Pre-Wired	By Vendor		
P-00-FIT-1047	AI	4-20mA	San Vicente RO System Second Stage Membranes Discharge Flow Indicating Transmitter	I-103	Conventional RO VCP PLC (San Vicente) Pre-Wired	By Vendor		
P-00-HS-1040A	DSDO	EtherNet / IP	San Vicente RO System Second Stage Feed Pump Start Command	I-103	Conventional RO VCP PLC (San Vicente) Pre-Wired	By Vendor		
P-00-HS-1040B	DSDO	EtherNet / IP	San Vicente RO System Second Stage Feed Pump Stop Command	I-103	Conventional RO VCP PLC (San Vicente) Pre-Wired	By Vendor		
P-00-II-1040	DSAI	EtherNet / IP	San Vicente RO System Second Stage Feed Pump Current Indicator	I-103	Conventional RO VCP PLC (San Vicente) Pre-Wired	By Vendor		
P-00-NSHH-1046	DI	24VDC	San Vicente RO System Second Stage Membranes Discharge Control Valve Torque Alarm High High	I-103	Conventional RO VCP PLC (San Vicente) Pre-Wired	By Vendor		
P-00-PIT-1040	AI	4-20mA	San Vicente RO System Second Stage Feed Pump Inlet Pressure Indicating Transmitter	I-103	Conventional RO VCP PLC (San Vicente) Pre-Wired	By Vendor		
P-00-PIT-1041	AI	4-20mA	San Vicente RO System Second Stage Feed Pump Discharge Pressure Indicating Transmitter	I-103	Conventional RO VCP PLC (San Vicente) Pre-Wired	By Vendor		
P-00-PIT-1046	AI	4-20mA	San Vicente RO System Second Stage Membranes Discharge Pressure Indicating Transmitter	I-103	Conventional RO VCP PLC (San Vicente) Pre-Wired	By Vendor		
P-00-SI-1040	DSAI	EtherNet / IP	San Vicente RO System Second Stage Feed Pump Speed Indicator	I-103	Conventional RO VCP PLC (San Vicente) Pre-Wired	By Vendor		
P-00-SK-1040	DSAO	EtherNet / IP	San Vicente RO System Second Stage Feed Pump Speed Setpoint	I-103	Conventional RO VCP PLC (San Vicente) Pre-Wired	By Vendor		
P-00-TAH-1040	DSDI	EtherNet / IP	San Vicente RO System Second Stage Feed Pump Temperature Alarm High	I-103	Conventional RO VCP PLC (San Vicente) Pre-Wired	By Vendor		
P-00-YA-1040A	DSDI	EtherNet / IP	San Vicente RO System Second Stage Feed Pump Fail Alarm	I-103	Conventional RO VCP PLC (San Vicente) Pre-Wired	By Vendor		
P-00-YA-1040B	DSDI	EtherNet / IP	San Vicente RO System Second Stage Feed Pump E-Stop Alarm	I-103	Conventional RO VCP PLC (San Vicente) Pre-Wired	By Vendor		
P-00-YL-1040	DSDI	EtherNet / IP	San Vicente RO System Second Stage Feed Pump Run Status	I-103	Conventional RO VCP PLC (San Vicente) Pre-Wired	By Vendor		
P-00-ZC-1046	AO	4-20mA	San Vicente RO System Second Stage Membranes Discharge Control Valve Position Control	I-103	Conventional RO VCP PLC (San Vicente) Pre-Wired	By Vendor		
P-00-ZI-1046	AI	4-20mA	San Vicente RO System Second Stage Membranes Discharge Control Valve Position Indicator	I-103	Conventional RO VCP PLC (San Vicente) Pre-Wired	By Vendor		
P-00-ZL-1040	DSDI	EtherNet / IP	San Vicente RO System Second Stage Feed Pump Ready Status	I-103	Conventional RO VCP PLC (San Vicente) Pre-Wired	By Vendor		
P-00-ZL-1046	DI	24VDC	San Vicente RO System Second Stage Membranes Discharge Control Valve Ready Status	I-103	Conventional RO VCP PLC (San Vicente) Pre-Wired	By Vendor		
P-00-ZLC-1046	DI	24VDC	San Vicente RO System Second Stage Membranes Discharge Control Valve Closed Position Status	I-103	Conventional RO VCP PLC (San Vicente) Pre-Wired	By Vendor		
P-00-ZLO-1046	DI	24VDC	San Vicente RO System Second Stage Membranes Discharge Control Valve Open Position Status	I-103	Conventional RO VCP PLC (San Vicente) Pre-Wired	By Vendor		
P-00-AIT-1051	AI	4-20mA	San Vicente RO System Third Stage Feed Pump Inlet PH Analyzer Indicating Transmitter	I-104	Conventional RO VCP PLC (San Vicente) Pre-Wired	By Vendor		
P-00-AIT-1052	AI	4-20mA	San Vicente RO System Third Stage Feed Pump Inlet Conductivity Analyzer Indicating Transmitter	I-104	Conventional RO VCP PLC (San Vicente) Pre-Wired	By Vendor		
P-00-AIT-1056	AI	4-20mA	San Vicente RO System Third Stage Membranes Discharge Conductivity Analyzer Indicating Transmitter	I-104	Conventional RO VCP PLC (San Vicente) Pre-Wired	By Vendor		
P-00-AIT-1058	AI	4-20mA	San Vicente RO System Third Stage Membranes Discharge To Waste Line Conductivity Analyzer Indicating Transmitter	I-104	Conventional RO VCP PLC (San Vicente) Pre-Wired	By Vendor		
P-00-FIT-1056	AI	4-20mA	San Vicente RO System Third Stage Membranes Discharge Flow Indicating Transmitter	I-104	Conventional RO VCP PLC (San Vicente) Pre-Wired	By Vendor		
P-00-FIT-1058	AI	4-20mA	San Vicente RO System Third Stage Membranes Discharge To Waste Line Flow Indicating Transmitter	I-104	Conventional RO VCP PLC (San Vicente) Pre-Wired	By Vendor		
P-00-HS-1050	DO	120VAC	San Vicente RO System Third Stage Feed Pump Inlet Supply Control Valve Open/Close Command	I-104	Conventional RO VCP PLC (San Vicente) Pre-Wired	By Vendor		
P-00-HS-1055A	DSDO	EtherNet / IP	San Vicente RO System Third Stage Feed Pump Start Command	I-104	Conventional RO VCP PLC (San Vicente) Pre-Wired	By Vendor		
P-00-HS-1055B	DSDO	EtherNet / IP	San Vicente RO System Third Stage Feed Pump Stop Command	I-104	Conventional RO VCP PLC (San Vicente) Pre-Wired	By Vendor		
P-00-II-1055	DSAI	EtherNet / IP	San Vicente RO System Third Stage Feed Pump Current Indicator	I-104	Conventional RO VCP PLC (San Vicente) Pre-Wired	By Vendor		
P-00-NSHH-1057	DI	24VDC	San Vicente RO System Third Stage Membranes Discharge Control Valve Torque Alarm High High	I-104	Conventional RO VCP PLC (San Vicente) Pre-Wired	By Vendor		
P-00-PAL-1055	DSDI	EtherNet / IP	San Vicente RO System Third Stage Feed Pump Inlet Pressure Alarm Low	I-104	Conventional RO VCP PLC (San Vicente) Pre-Wired	By Vendor		
P-00-PIT-1055	AI	4-20mA	San Vicente RO System Third Stage Feed Pump Discharge Pressure Indicating Transmitter	I-104	Conventional RO VCP PLC (San Vicente) Pre-Wired	By Vendor		
P-00-PIT-1056	AI	4-20mA	San Vicente RO System Third Stage Membranes Discharge Pressure Indicating Transmitter	I-104	Conventional RO VCP PLC (San Vicente) Pre-Wired	By Vendor		
P-00-PIT-1057	AI	4-20mA	San Vicente RO System Third Stage Membranes Discharge To Waste Line Pressure Indicating Transmitter	I-104	Conventional RO VCP PLC (San Vicente) Pre-Wired	By Vendor		
P-00-SI-1055	DSAI	EtherNet / IP	San Vicente RO System Third Stage Feed Pump Speed Indicator	I-104	Conventional RO VCP PLC (San Vicente) Pre-Wired	By Vendor		
P-00-SK-1055	DSAO	EtherNet / IP	San Vicente RO System Third Stage Feed Pump Speed Setpoint	I-104	Conventional RO VCP PLC (San Vicente) Pre-Wired	By Vendor		
P-00-TAH-1055	DSDI	EtherNet / IP	San Vicente RO System Third Stage Feed Pump Temperature Alarm High	I-104	Conventional RO VCP PLC (San Vicente) Pre-Wired	By Vendor		
P-00-YA-1050	DI	24VDC	San Vicente RO System Third Stage Feed Pump Inlet Supply Control Valve Fail Alarm	I-104	Conventional RO VCP PLC (San Vicente) Pre-Wired	By Vendor		
P-00-YA-1055A	DSDI	EtherNet / IP	San Vicente RO System Third Stage Feed Pump Fail Alarm	I-104	Conventional RO VCP PLC (San Vicente) Pre-Wired	By Vendor		

P-00-YA-1055B	DSDI	EtherNet / IP	San Vicente RO System Third Stage Feed Pump E-Stop Alarm	I-104	Conventional RO VCP PLC (San Vicente) Pre-Wired	By Vendor		
P-00-YL-1055	DSDI	EtherNet / IP	San Vicente RO System Third Stage Feed Pump Ready Status	I-104	Conventional RO VCP PLC (San Vicente) Pre-Wired	By Vendor		
P-00-ZC-1057	AO	4-20mA	San Vicente RO System Third Stage Membranes Discharge Control Valve Position Control	I-104	Conventional RO VCP PLC (San Vicente) Pre-Wired	By Vendor		
P-00-ZI-1057	AI	4-20mA	San Vicente RO System Third Stage Membranes Discharge Control Valve Position Indicator	I-104	Conventional RO VCP PLC (San Vicente) Pre-Wired	By Vendor		
P-00-ZL-1050	DI	24VDC	San Vicente RO System Third Stage Feed Pump Inlet Supply Control Valve Ready Status	I-104	Conventional RO VCP PLC (San Vicente) Pre-Wired	By Vendor		
P-00-ZL-1055	DSDI	EtherNet / IP	San Vicente RO System Third Stage Feed Pump Ready Status	I-104	Conventional RO VCP PLC (San Vicente) Pre-Wired	By Vendor		
P-00-ZL-1057	DI	24VDC	San Vicente RO System Third Stage Membranes Discharge Control Valve Ready Status	I-104	Conventional RO VCP PLC (San Vicente) Pre-Wired	By Vendor		
P-00-ZLC-1050	DI	24VDC	San Vicente RO System Third Stage Feed Pump Inlet Supply Control Valve Closed Position Status	I-104	Conventional RO VCP PLC (San Vicente) Pre-Wired	By Vendor		
P-00-ZLC-1057	DI	24VDC	San Vicente RO System Third Stage Membranes Discharge Control Valve Closed Position Status	I-104	Conventional RO VCP PLC (San Vicente) Pre-Wired	By Vendor		
P-00-ZLO-1050	DI	24VDC	San Vicente RO System Third Stage Feed Pump Inlet Supply Control Valve Open Position Status	I-104	Conventional RO VCP PLC (San Vicente) Pre-Wired	By Vendor		
P-00-ZLO-1057	DI	24VDC	San Vicente RO System Third Stage Membranes Discharge Control Valve Open Position Status	I-104	Conventional RO VCP PLC (San Vicente) Pre-Wired	By Vendor		
P-00-AIT-1059	AI	4-20mA	San Vicente RO System Stage 1, 2 and 3 Common Discharge Header Conductivity Analyzer Indicating Transmitter	I-105	Conventional RO VCP PLC (San Vicente) Pre-Wired	By Vendor		
P-00-FIT-1059	AI	4-20mA	San Vicente RO System Stage 1 and 2 Common Discharge Header Flow Indicating Transmitter	I-105	Conventional RO VCP PLC (San Vicente) Pre-Wired	By Vendor		
P-00-PIT-1059	AI	4-20mA	San Vicente RO System Stage 1 and 2 Common Discharge Header Pressure Indicating Transmitter	I-105	Conventional RO VCP PLC (San Vicente) Pre-Wired	By Vendor		

FRRO RO VCP PLC

AI	1
DI	5

IO Tag	I/O Type	Signal Type	Description	PID Drawing No.	Processor Cabinet No.	Rack/Slot/Channel	Comments	Remark
P-00-TI-008	AI	4-20mA	FRRO VCP (Murray) Temperature Indicator	I-192	FRRO RO VCP PLC	By Vendor		
P-00-XA-008	DI	24VDC	FRRO VCP (Murray) Intrusion Alarm	I-192	FRRO RO VCP PLC	By Vendor		
P-00-YA-008A	DI	24VDC	FRRO VCP (Murray) PS1 24VDC Primary Power Fail Alarm	I-192	FRRO RO VCP PLC	By Vendor		
P-00-YA-008B	DI	24VDC	FRRO VCP (Murray) PS2 24VDC Secondary Power Fail Alarm	I-192	FRRO RO VCP PLC	By Vendor		
P-00-YA-008C	DI	24VDC	FRRO VCP (Murray) Redundancy Module Fail Alarm	I-192	FRRO RO VCP PLC	By Vendor		
P-00-YA-008D	DI	24VDC	FRRO VCP (Murray) Ethernet Switch Major Alarm	I-192	FRRO RO VCP PLC	By Vendor		

FRRO VCP LC

DI	14
DO	3

IO Tag	I/O Type	Signal Type	Description	PID Drawing No.	Processor Cabinet No.	Rack/Slot/Channel	Comments	Remark
P-00-FAL-990	DI	24VDC	FRRO Transfer Pump Low Flow Alarm	I-99	FRRO VCP LC	By Vendor		
P-00-HS-990	DO	120VAC	FRRO Transfer Pump Start/Stop Command	I-99	FRRO VCP LC	By Vendor		
P-00-HS-991	DO	120VAC	FRRO Transfer Pump Discharge Control Valve Open/Close Command	I-99	FRRO VCP LC	By Vendor		
P-00-HS-992	DO	120VAC	Flush Pump Discharge To Flow Reversal RO Pilot Control Valve Open/Close Command	I-99	FRRO VCP LC	By Vendor		
P-00-TAH-990	DI	24VDC	FRRO Transfer Pump Temperature Alarm High	I-99	FRRO VCP LC	By Vendor		
P-00-YA-990	DI	24VDC	FRRO Transfer Pump E-Stop Alarm	I-99	FRRO VCP LC	By Vendor		
P-00-YA-990A	DI	24VDC	FRRO Transfer Pump Fail Alarm	I-99	FRRO VCP LC	By Vendor		
P-00-YA-991	DI	24VDC	FRRO Transfer Pump Discharge Control Valve Fail Alarm	I-99	FRRO VCP LC	By Vendor		
P-00-YA-992	DI	24VDC	Flush Pump Discharge To Flow Reversal RO Pilot Control Valve Fail Alarm	I-99	FRRO VCP LC	By Vendor		
P-00-YL-990	DI	24VDC	FRRO Transfer Pump Run Status	I-99	FRRO VCP LC	By Vendor		
P-00-ZL-990	DI	24VDC	FRRO Transfer Pump Ready Status	I-99	FRRO VCP LC	By Vendor		
P-00-ZL-991	DI	24VDC	FRRO Transfer Pump Discharge Control Valve Ready Status	I-99	FRRO VCP LC	By Vendor		
P-00-ZL-992	DI	24VDC	Flush Pump Discharge To Flow Reversal RO Pilot Control Valve Ready Status	I-99	FRRO VCP LC	By Vendor		
P-00-ZLC-991	DI	24VDC	FRRO Transfer Pump Discharge Control Valve Closed Position Status	I-99	FRRO VCP LC	By Vendor		
P-00-ZLC-992	DI	24VDC	Flush Pump Discharge To Flow Reversal RO Pilot Control Valve Closed Position Status	I-99	FRRO VCP LC	By Vendor		
P-00-ZLO-991	DI	24VDC	FRRO Transfer Pump Discharge Control Valve Open Position Status	I-99	FRRO VCP LC	By Vendor		
P-00-ZLO-992	DI	24VDC	Flush Pump Discharge To Flow Reversal RO Pilot Control Valve Open Position Status	I-99	FRRO VCP LC	By Vendor		

MBR VCP PLC

AI	15
AO	1
DI	14
DO	3
DS	0
DSAO	3
DSDI	20
DSDO	6

IO Tag	I/O Type	Signal Type	Description	PID Drawing No.	Processor Cabinet No.	Rack/Slot/Channel	Comments	Remark
P-00-TI-013	AI	4-20mA	MBR VCP Temperature Indicator	I-193	MBR VCP PLC	By Vendor		
P-00-XA-013	DI	24VDC	MBR VCP Intrusion Alarm	I-193	MBR VCP PLC	By Vendor		
P-00-YA-013A	DI	24VDC	MBR VCP PS1 24VDC Primary Power Fail Alarm	I-193	MBR VCP PLC	By Vendor		
P-00-YA-013B	DI	24VDC	MBR VCP PS2 24VDC Secondary Power Fail Alarm	I-193	MBR VCP PLC	By Vendor		
P-00-YA-013C	DI	24VDC	MBR VCP Redundancy Module Fail Alarm	I-193	MBR VCP PLC	By Vendor		
P-00-YA-013D	DI	24VDC	MBR VCP Ethernet Switch Major Alarm	I-193	MBR VCP PLC	By Vendor		
P-00-HS-501	DO	120VAC	MBR System Membrane Basin Air Valve Open/Close Command	I-51	MBR VCP PLC	By Vendor		
P-00-HS-502	DO	120VAC	MBR System Membrane Basin Air Line Solenoid Valve On/Off Command	I-51	MBR VCP PLC	By Vendor		
P-00-HS-504	DO	120VAC	MBR System Membrane Basin Filtrate Line Solenoid Valve On/Off Command	I-51	MBR VCP PLC	By Vendor		
P-00-LIT-506	AI	4-20mA	MBR System Membrane Basin Level Indicating Transmitter	I-51	MBR VCP PLC	By Vendor		
P-00-LSH-505	DI	24VDC	MBR System Membrane Basin Line Charge Confirmed	I-51	MBR VCP PLC	By Vendor		
P-00-PIT-507	AI	4-20mA	MBR System Membrane Basin Filtrate Line Pressure Indicating Transmitter	I-51	MBR VCP PLC	By Vendor		
P-00-ZL-501	DI	24VDC	MBR System Membrane Basin Air Valve Ready Status	I-51	MBR VCP PLC	By Vendor		
P-00-ZLC-501	DI	24VDC	MBR System Membrane Basin Air Valve Closed Position Status	I-51	MBR VCP PLC	By Vendor		
P-00-ZLO-501	DI	24VDC	MBR System Membrane Basin Air Valve Open Position Status	I-51	MBR VCP PLC	By Vendor		
P-00-FAL-520	DSDI	EtherNet / IP	RAS Pump Low Flow Alarm	I-52	MBR VCP PLC	By Vendor		
P-00-FIT-511	AI	4-20mA	MBR System Filtrate/Backwash Pump Discharge Flow Indicating Transmitter	I-52	MBR VCP PLC	By Vendor		
P-00-FIT-521	AI	4-20mA	RAS Pump Discharge Flow Indicating Transmitter	I-52	MBR VCP PLC	By Vendor		
P-00-FIT-522	AI	4-20mA	RAS Pump Discharge To Pretreatment Strainers Flow Indicating Transmitter	I-52	MBR VCP PLC	By Vendor		
P-00-HS-510A	DSDO	EtherNet / IP	MBR System Filtrate/Backwash Pump Start Command	I-52	MBR VCP PLC	By Vendor		
P-00-HS-510B	DSDO	EtherNet / IP	MBR System Filtrate/Backwash Pump Stop Command	I-52	MBR VCP PLC	By Vendor		
P-00-HS-520A	DSDO	EtherNet / IP	RAS Pump Start Command	I-52	MBR VCP PLC	By Vendor		
P-00-HS-520B	DSDO	EtherNet / IP	RAS Pump Stop Command	I-52	MBR VCP PLC	By Vendor		
P-00-II-510	DSAI	EtherNet / IP	MBR System Filtrate/Backwash Pump Current Indicator	I-52	MBR VCP PLC	By Vendor		
P-00-II-520	DSAI	EtherNet / IP	RAS Pump Current Indicator	I-52	MBR VCP PLC	By Vendor		
P-00-PIT-510	AI	4-20mA	MBR System Filtrate/Backwash Pump Suction Header Pressure Indicating Transmitter	I-52	MBR VCP PLC	By Vendor		
P-00-PIT-510B	AI	4-20mA	MBR System Filtrate/Backwash Pump Discharge Pressure Indicating Transmitter	I-52	MBR VCP PLC	By Vendor		
P-00-SI-510	DSAI	EtherNet / IP	MBR System Filtrate/Backwash Pump Speed Indicator	I-52	MBR VCP PLC	By Vendor		
P-00-SI-520	DSAI	EtherNet / IP	RAS Pump Speed Indicator	I-52	MBR VCP PLC	By Vendor		
P-00-SK-510	DSAO	EtherNet / IP	MBR System Filtrate/Backwash Pump Speed Setpoint	I-52	MBR VCP PLC	By Vendor		
P-00-SK-520	DSAO	EtherNet / IP	RAS Pump Speed Setpoint	I-52	MBR VCP PLC	By Vendor		
P-00-TAH-510	DSDI	EtherNet / IP	MBR System Filtrate/Backwash Pump Temperature Alarm High	I-52	MBR VCP PLC	By Vendor		
P-00-TAH-520	DSDI	EtherNet / IP	RAS Pump Temperature Alarm High	I-52	MBR VCP PLC	By Vendor		
P-00-TIT-512	AI	4-20mA	MBR System Filtrate/Backwash Pump Discharge Temperature Indicating Transmitter	I-52	MBR VCP PLC	By Vendor		
P-00-YA-420C	DI	24VDC	RAS Pump Discharge To Deox Tank Control Valve Fail Alarm	I-52	MBR VCP PLC	By Vendor		
P-00-YA-510A	DSDI	EtherNet / IP	MBR System Filtrate/Backwash Pump Fail Alarm	I-52	MBR VCP PLC	By Vendor		
P-00-YA-510B	DSDI	EtherNet / IP	MBR System Filtrate/Backwash Pump E-Stop Alarm	I-52	MBR VCP PLC	By Vendor		
P-00-YA-520A	DSDI	EtherNet / IP	RAS Pump Fail Alarm	I-52	MBR VCP PLC	By Vendor		
P-00-YA-520B	DSDI	EtherNet / IP	RAS Pump E-Stop Alarm	I-52	MBR VCP PLC	By Vendor		
P-00-YL-510B	DSDI	EtherNet / IP	MBR System Filtrate/Backwash Pump Run Status Indication	I-52	MBR VCP PLC	By Vendor		
P-00-YL-520B	DSDI	EtherNet / IP	RAS Pump Run Status Indication	I-52	MBR VCP PLC	By Vendor		
P-00-ZI-420C	AI	4-20mA	RAS Pump Discharge To Deox Tank Control Valve Position Indicator	I-52	MBR VCP PLC	By Vendor		
P-00-ZK-420C	AO	4-20mA	RAS Pump Discharge To Deox Tank Control Valve Position Setpoint	I-52	MBR VCP PLC	By Vendor		
P-00-ZL-420C	DI	24VDC	RAS Pump Discharge To Deox Tank Control Valve Ready Status	I-52	MBR VCP PLC	By Vendor		

P-00-ZL-510A	DSDI	EtherNet / IP	MBR System Filtrate/Backwash Pump Ready Status	I-52	MBR VCP PLC	By Vendor		
P-00-ZL-520A	DSDI	EtherNet / IP	RAS Pump Ready Status Indication	I-52	MBR VCP PLC	By Vendor		
P-00-ZLC-420C	DI	24VDC	RAS Pump Discharge To Deox Tank Control Valve Closed Position Status	I-52	MBR VCP PLC	By Vendor		
P-00-ZLO-420C	DI	24VDC	RAS Pump Discharge To Deox Tank Control Valve Open Position Status	I-52	MBR VCP PLC	By Vendor		
P-00-FIT-530	AI	4-20mA	MBR Air Scour Blower Discharge Flow Indicating Transmitter	I-53	MBR VCP PLC	By Vendor		
P-00-HS-530	DSDO	EtherNet / IP	Mbr Air Scour Blower Start/Stop Command	I-53	MBR VCP PLC	By Vendor		
P-00-HS-531	DSDO	EtherNet / IP	MBR Air Scour Blower Discharge Header Air Vent Valve Open/Close Command	I-53	MBR VCP PLC	By Vendor		
P-00-II-530	DSAI	EtherNet / IP	MBR Air Scour Blower Current Indicator	I-53	MBR VCP PLC	By Vendor		
P-00-PIT-530	AI	4-20mA	MBR Air Scour Blower Discharge Pressure Indicating Transmitter	I-53	MBR VCP PLC	By Vendor		
P-00-SI-530	DSAI	EtherNet / IP	MBR Air Scour Blower Speed Indicator	I-53	MBR VCP PLC	By Vendor		
P-00-SK-530	DSAO	EtherNet / IP	MBR Air Scour Blower Speed Setpoint	I-53	MBR VCP PLC	By Vendor		
P-00-TAH-530	DSDI	EtherNet / IP	MBR Air Scour Blower Temperature Alarm High	I-53	MBR VCP PLC	By Vendor		
P-00-YA-530A	DSDI	EtherNet / IP	MBR Air Scour Blower Fail Alarm	I-53	MBR VCP PLC	By Vendor		
P-00-YA-530B	DSDI	EtherNet / IP	MBR Air Scour Blower E-Stop Alarm	I-53	MBR VCP PLC	By Vendor		
P-00-YA-531	DSDI	EtherNet / IP	MBR Air Scour Blower Discharge Header Air Vent Valve Fail Alarm	I-53	MBR VCP PLC	By Vendor		
P-00-YL-530B	DSDI	EtherNet / IP	MBR Air Scour Blower Run Status Indication	I-53	MBR VCP PLC	By Vendor		
P-00-ZL-530A	DSDI	EtherNet / IP	MBR Air Scour Blower Ready Status	I-53	MBR VCP PLC	By Vendor		
P-00-ZL-531	DSDI	EtherNet / IP	MBR Air Scour Blower Discharge Header Air Vent Valve Ready Status	I-53	MBR VCP PLC	By Vendor		
P-00-ZLC-531	DSDI	EtherNet / IP	MBR Air Scour Blower Discharge Header Air Vent Valve Closed Position Status	I-53	MBR VCP PLC	By Vendor		
P-00-ZLO-531	DSDI	EtherNet / IP	MBR Air Scour Blower Discharge Header Air Vent Valve Open Position Status	I-53	MBR VCP PLC	By Vendor		
P-00-AIT-541	AI	4-20mA	MBR System Filtrate NH3 Analyzer Indicating Transmitter	I-54	MBR VCP PLC	By Vendor		
P-00-AIT-542	AI	4-20mA	MBR System Filtrate NO3/NO2 Analyzer Indicating Transmitter	I-54	MBR VCP PLC	By Vendor		
P-00-AIT-543	AI	4-20mA	MBR System Filtrate Turbidity Analyzer Indicating Transmitter	I-54	MBR VCP PLC	By Vendor		
P-00-FSL-540	DI	24VDC	MBR System Filtrate Inlet Header Flow Alarm Low	I-54	MBR VCP PLC	By Vendor		

MF VCP PLC

AI	20
DI	58
DO	13
DS	0
DSAO	3
DSDI	15
DSDO	3

IO Tag	I/O Type	Signal Type	Description	PID Drawing No.	Processor Cabinet No.	Rack/Slot/Channel	Comments	Remark
P-00-TI-005	AI	4-20mA	MF VCP (Murray) Temperature Indicator	I-191	MF VCP PLC	By Vendor		
P-00-XA-005	DI	24VDC	MF VCP (Murray) Intrusion Alarm	I-191	MF VCP PLC	By Vendor		
P-00-YA-005A	DI	24VDC	MF VCP (Murray) PS1 24VDC Primary Power Fail	I-191	MF VCP PLC	By Vendor		
P-00-YA-005B	DI	24VDC	MF VCP (Murray) PS2 24VDC Secondary Power Fail	I-191	MF VCP PLC	By Vendor		
P-00-YA-005C	DI	24VDC	MF VCP (Murray) Redundancy Module Fail Alarm	I-191	MF VCP PLC	By Vendor		
P-00-YA-005D	DI	24VDC	MF VCP (Murray) Ethernet Switch Major Alarm	I-191	MF VCP PLC	By Vendor		
P-00-FIT-865	AI	4-20mA	MF Backwash Feed Pump Discharge Flow Indicating Transmitter	I-86	MF VCP PLC	By Vendor		
P-00-FIT-867	AI	4-20mA	MF Feed/CIP Pump No 1 Discharge Flow Indicating Transmitter	I-86	MF VCP PLC	By Vendor		
P-00-FIT-868	AI	4-20mA	MF Feed/CIP Pump No 2 Discharge Flow Indicating Transmitter	I-86	MF VCP PLC	By Vendor		
P-00-HS-862	DSDO	EtherNet / IP	MF Backwash Feed Pump Start/Stop Command	I-86	MF VCP PLC	By Vendor		
P-00-HS-863	DSDO	EtherNet / IP	MF Feed/CIP Pump No 1 Start/Stop Command	I-86	MF VCP PLC	By Vendor		
P-00-HS-864	DSDO	EtherNet / IP	MF Feed/CIP Pump No 2 Start/Stop Command	I-86	MF VCP PLC	By Vendor		
P-00-II-862	DSAI	EtherNet / IP	MF Backwash Feed Pump Current Indicator	I-86	MF VCP PLC	By Vendor		
P-00-II-863	DSAI	EtherNet / IP	MF Feed/CIP Pump No 1 Current Indicator	I-86	MF VCP PLC	By Vendor		
P-00-II-864	DSAI	EtherNet / IP	MF Feed/CIP Pump No 2 Current Indicator	I-86	MF VCP PLC	By Vendor		
P-00-SI-862	DSAI	EtherNet / IP	MF Backwash Feed Pump Speed Indicator	I-86	MF VCP PLC	By Vendor		
P-00-SI-863	DSAI	EtherNet / IP	MF Feed/CIP Pump No 1 Speed Indicator	I-86	MF VCP PLC	By Vendor		
P-00-SI-864	DSAI	EtherNet / IP	MF Feed/CIP Pump No 2 Speed Indicator	I-86	MF VCP PLC	By Vendor		
P-00-SK-862	DSAO	EtherNet / IP	MF Backwash Feed Pump Speed Setpoint	I-86	MF VCP PLC	By Vendor		
P-00-SK-863	DSAO	EtherNet / IP	MF Feed/CIP Pump No 1 Speed Setpoint	I-86	MF VCP PLC	By Vendor		
P-00-SK-864	DSAO	EtherNet / IP	MF Feed/CIP Pump No 2 Speed Setpoint	I-86	MF VCP PLC	By Vendor		
P-00-TAH-862	DSDI	EtherNet / IP	MF Backwash Feed Pump Temperature Alarm High	I-86	MF VCP PLC	By Vendor		
P-00-TAH-863	DSDI	EtherNet / IP	MF Feed/CIP Pump No 1 Temperature Alarm High	I-86	MF VCP PLC	By Vendor		
P-00-TAH-864	DSDI	EtherNet / IP	MF Feed/CIP Pump No 2 Temperature Alarm High	I-86	MF VCP PLC	By Vendor		
P-00-YA-862A	DSDI	EtherNet / IP	MF Backwash Feed Pump Fail Alarm	I-86	MF VCP PLC	By Vendor		
P-00-YA-862B	DSDI	EtherNet / IP	MF Backwash Feed Pump E-Stop Alarm	I-86	MF VCP PLC	By Vendor		
P-00-YA-863A	DSDI	EtherNet / IP	MF Feed/CIP Pump No 1 Fail Alarm	I-86	MF VCP PLC	By Vendor		
P-00-YA-863B	DSDI	EtherNet / IP	MF Feed/CIP Pump No 1 E-Stop Alarm	I-86	MF VCP PLC	By Vendor		
P-00-YA-864A	DSDI	EtherNet / IP	MF Feed/CIP Pump No 2 Fail Alarm	I-86	MF VCP PLC	By Vendor		
P-00-YA-864B	DSDI	EtherNet / IP	MF Feed/CIP Pump No 2 E-Stop Alarm	I-86	MF VCP PLC	By Vendor		
P-00-YL-862	DSDI	EtherNet / IP	MF Backwash Feed Pump Run Status	I-86	MF VCP PLC	By Vendor		
P-00-YL-863	DSDI	EtherNet / IP	MF Feed/CIP Pump No 1 Run Status	I-86	MF VCP PLC	By Vendor		
P-00-YL-864	DSDI	EtherNet / IP	MF Feed/CIP Pump No 2 Run Status	I-86	MF VCP PLC	By Vendor		
P-00-ZL-862	DSDI	EtherNet / IP	MF Backwash Feed Pump Ready Status	I-86	MF VCP PLC	By Vendor		
P-00-ZL-863	DSDI	EtherNet / IP	MF Feed/CIP Pump No 1 Ready Status	I-86	MF VCP PLC	By Vendor		
P-00-ZL-864	DSDI	EtherNet / IP	MF Feed/CIP Pump No 2 Ready Status	I-86	MF VCP PLC	By Vendor		
P-00-AIT-878	AI	4-20mA	MF Feed/CIP Supply ATP Analyzer Indicating Transmitter	I-87	MF VCP PLC	By Vendor		
P-00-AIT-879	AI	4-20mA	MF BW Supply Turbidity Analyzer Indicating Transmitter	I-87	MF VCP PLC	By Vendor		
P-00-FIT-866	AI	4-20mA	MF Air Compressed Supply Line Flow Indicating Transmitter	I-87	MF VCP PLC	By Vendor		
P-00-FIT-880	AI	4-20mA	Murray MF System Train 1 Inlet Header Flow Indicating Transmitter	I-87	MF VCP PLC	By Vendor		
P-00-HS-872	DO	120VAC	MF Train No 1 (Murray) Compressed Air Supply Valve Open/Close Command	I-87	MF VCP PLC	By Vendor		
P-00-HS-873	DO	120VAC	MF Train No 1 (Murray) MF BW Supply Valve No 1 open/Close Command	I-87	MF VCP PLC	By Vendor		
P-00-HS-874	DO	120VAC	Murray MF System Train 1 Discharge Control Valve Open/Close Command	I-87	MF VCP PLC	By Vendor		

P-00-HS-875	DO	120VAC	Murray MF System Train 1 Discharge Control Valve No 2 Open/Close Command	I-87	MF VCP PLC	By Vendor		
P-00-HS-878	DO	120VAC	MF Train No 1 (Murray) MF Feed/CIP Supply Control Valve Open/Close Command	I-87	MF VCP PLC	By Vendor		
P-00-HS-879	DO	120VAC	MF Train No 1 (Murray) MF BW Supply Valve No 2 Open/Close Command	I-87	MF VCP PLC	By Vendor		
P-00-PIT-878	AI	4-20mA	MF Feed/CIP Supply Pressure Indicating Transmitter	I-87	MF VCP PLC	By Vendor		
P-00-PIT-879	AI	4-20mA	MF BW Supply Pressure Indicating Transmitter No 1	I-87	MF VCP PLC	By Vendor		
P-00-PIT-880	AI	4-20mA	MF BW Supply Pressure Indicating Transmitter No 2	I-87	MF VCP PLC	By Vendor		
P-00-TIT-878	AI	4-20mA	MF Feed/CIP Supply Temperature Indicating Transmitter	I-87	MF VCP PLC	By Vendor		
P-00-YA-872	DI	24VDC	MF Train No 1 (Murray) Compressed Air Supply Valve Fail Alarm	I-87	MF VCP PLC	By Vendor		
P-00-YA-873	DI	24VDC	MF Train No 1 (Murray) MF BW Supply Valve No 1 Fail Alarm	I-87	MF VCP PLC	By Vendor		
P-00-YA-874	DI	24VDC	Murray MF System Train 1 Discharge Control Valve No 1 Fail Alarm	I-87	MF VCP PLC	By Vendor		
P-00-YA-875	DI	24VDC	Murray MF System Train 1 Discharge Control Valve No 2 Fail Alarm	I-87	MF VCP PLC	By Vendor		
P-00-YA-878	DI	24VDC	MF Train No 1 (Murray) MF Feed/CIP Supply Control Valve Fail Alarm	I-87	MF VCP PLC	By Vendor		
P-00-YA-879	DI	24VDC	MF Train No 1 (Murray) MF BW Supply Valve No 2 Fail Alarm	I-87	MF VCP PLC	By Vendor		
P-00-ZL-872	DI	24VDC	MF Train No 1 (Murray) Compressed Air Supply Valve Ready Status	I-87	MF VCP PLC	By Vendor		
P-00-ZL-873	DI	24VDC	MF Train No 1 (Murray) MF BW Supply Valve No 1 Ready Status	I-87	MF VCP PLC	By Vendor		
P-00-ZL-874	DI	24VDC	Murray MF System Train 1 Discharge Control Valve No 1 Ready Status	I-87	MF VCP PLC	By Vendor		
P-00-ZL-875	DI	24VDC	Murray MF System Train 1 Discharge Control Valve No 2 Ready Status	I-87	MF VCP PLC	By Vendor		
P-00-ZL-878	DI	24VDC	MF Train No 1 (Murray) MF Feed/CIP Supply Control Valve Ready Status	I-87	MF VCP PLC	By Vendor		
P-00-ZL-879	DI	24VDC	MF Train No 1 (Murray) MF BW Supply Valve No 2 Ready Status	I-87	MF VCP PLC	By Vendor		
P-00-ZLC-872	DI	24VDC	MF Train No 1 (Murray) Compressed Air Supply Valve Closed Position Status	I-87	MF VCP PLC	By Vendor		
P-00-ZLC-873	DI	24VDC	MF Train No 1 (Murray) MF BW Supply Valve No 1 Closed Position Status	I-87	MF VCP PLC	By Vendor		
P-00-ZLC-874	DI	24VDC	Murray MF System Train 1 Discharge Control Valve No 1 Closed Position Status	I-87	MF VCP PLC	By Vendor		
P-00-ZLC-875	DI	24VDC	Murray MF System Train 1 Discharge Control Valve No 2 Closed Position Status	I-87	MF VCP PLC	By Vendor		
P-00-ZLC-878	DI	24VDC	MF Train No 1 (Murray) MF Feed/CIP Supply Control Valve Closed Position Status	I-87	MF VCP PLC	By Vendor		
P-00-ZLC-879	DI	24VDC	MF Train No 1 (Murray) MF BW Supply Valve No 2 Closed Position Status	I-87	MF VCP PLC	By Vendor		
P-00-ZLO-872	DI	24VDC	MF Train No 1 (Murray) Compressed Air Supply Valve Open Position Status	I-87	MF VCP PLC	By Vendor		
P-00-ZLO-873	DI	24VDC	MF Train No 1 (Murray) MF BW Supply Valve No 1 Open Position Status	I-87	MF VCP PLC	By Vendor		
P-00-ZLO-874	DI	24VDC	Murray MF System Train 1 Discharge Control Valve No 1 Open Position Status	I-87	MF VCP PLC	By Vendor		
P-00-ZLO-875	DI	24VDC	Murray MF System Train 1 Discharge Control Valve No 2 Open Position Status	I-87	MF VCP PLC	By Vendor		
P-00-ZLO-878	DI	24VDC	MF Train No 1 (Murray) MF Feed/CIP Supply Control Valve Open Position Stauts	I-87	MF VCP PLC	By Vendor		
P-00-ZLO-879	DI	24VDC	MF Train No 1 (Murray) MF BW Supply Valve No 2 Open Position Status	I-87	MF VCP PLC	By Vendor		
P-00-AIT-884	AI	4-20mA	MF BW Supply Analyzer Indicating Transmitter	I-88	MF VCP PLC	By Vendor		
P-00-FIT-884	AI	4-20mA	MF BW Supply Flow Indicating Transmitter	I-88	MF VCP PLC	By Vendor		
P-00-HS-881	DO	120VAC	MF Train No 2 (Murray) MF Feed/CIP Supply Control Valve Open/Close Command	I-88	MF VCP PLC	By Vendor		
P-00-HS-882	DO	120VAC	MF Train No 2 (Murray) Compressed Air Supply Valve Open/Close Command	I-88	MF VCP PLC	By Vendor		
P-00-HS-883	DO	120VAC	MF Train No 2 (Murray) MF BW Supply Valve No 1 Open/Close Command	I-88	MF VCP PLC	By Vendor		
P-00-HS-884	DO	120VAC	MF Train No 2 (Murray) MF BW Supply Valve No 2 Open/Close Command	I-88	MF VCP PLC	By Vendor		
P-00-HS-886	DO	120VAC	Murray MF System Train 2 Discharge Control Valve No 1 Open/Close Command	I-88	MF VCP PLC	By Vendor		
P-00-HS-887	DO	120VAC	Murray MF System Train 2 Discharge Control Valve No 2 Open/Close Command	I-88	MF VCP PLC	By Vendor		
P-00-PIT-881	AI	4-20mA	MF Feed/CIP Supply Pressure Indicating Transmitter	I-88	MF VCP PLC	By Vendor		
P-00-PIT-884A	AI	4-20mA	MF BW Supply Pressure Indicating Transmitter No 1	I-88	MF VCP PLC	By Vendor		
P-00-PIT-884B	AI	4-20mA	MF BW Supply Pressure Indicating Transmitter No 2	I-88	MF VCP PLC	By Vendor		
P-00-TIT-881	AI	4-20mA	MF Feed/CIP Supply Temperature Indicating Transmitter	I-88	MF VCP PLC	By Vendor		
P-00-YA-881	DI	24VDC	MF Train No 2 (Murray) MF Feed/CIP Supply Control Valve Fail Alarm	I-88	MF VCP PLC	By Vendor		
P-00-YA-882	DI	24VDC	MF Train No 2 (Murray) Compressed Air Supply Valve Fail Alarm	I-88	MF VCP PLC	By Vendor		
P-00-YA-883	DI	24VDC	MF Train No 2 (Murray) MF BW Supply Valve No 1 Fail Alarm	I-88	MF VCP PLC	By Vendor		
P-00-YA-884	DI	24VDC	MF Train No 2 (Murray) MF BW Supply Valve No 2 Fail Alarm	I-88	MF VCP PLC	By Vendor		
P-00-YA-886	DI	24VDC	Murray MF System Train 2 Discharge Control Valve No 1 Fail Alarm	I-88	MF VCP PLC	By Vendor		
P-00-YA-887	DI	24VDC	Murray MF System Train 2 Discharge Control Valve No 2 Fail Alarm	I-88	MF VCP PLC	By Vendor		
P-00-ZL-881	DI	24VDC	MF Train No 2 (Murray) MF Feed/CIP Supply Control Valve Ready Status	I-88	MF VCP PLC	By Vendor		
P-00-ZL-882	DI	24VDC	MF Train No 2 (Murray) Compressed Air Supply Valve Ready Status	I-88	MF VCP PLC	By Vendor		
P-00-ZL-883	DI	24VDC	MF Train No 2 (Murray) MF BW Supply Valve No 1 Ready Status	I-88	MF VCP PLC	By Vendor		
P-00-ZL-884	DI	24VDC	MF Train No 2 (Murray) MF BW Supply Valve No 2 Ready Status	I-88	MF VCP PLC	By Vendor		
P-00-ZL-886	DI	24VDC	Murray MF System Train 2 Discharge Control Valve No 1 Ready Status	I-88	MF VCP PLC	By Vendor		

P-00-ZL-887	DI	24VDC	Murray MF System Train 2 Discharge Control Valve No 2 Ready Status	I-88	MF VCP PLC	By Vendor		
P-00-ZLC-881	DI	24VDC	MF Train No 2 (Murray) MF Feed/CIP Supply Control Valve Closed Position Status	I-88	MF VCP PLC	By Vendor		
P-00-ZLC-882	DI	24VDC	MF Train No 2 (Murray) Compressed Air Supply Valve Closed Position Status	I-88	MF VCP PLC	By Vendor		
P-00-ZLC-883	DI	24VDC	MF Train No 2 (Murray) MF BW Supply Valve No 1 Closed Position Status	I-88	MF VCP PLC	By Vendor		
P-00-ZLC-884	DI	24VDC	MF Train No 2 (Murray) MF BW Supply Valve No 2 Closed Position Status	I-88	MF VCP PLC	By Vendor		
P-00-ZLC-886	DI	24VDC	Murray MF System Train 2 Discharge Control Valve No 1 Closed Position Status	I-88	MF VCP PLC	By Vendor		
P-00-ZLC-887	DI	24VDC	Murray MF System Train 2 Discharge Control Valve No 2 Closed Position Status	I-88	MF VCP PLC	By Vendor		
P-00-ZLO-881	DI	24VDC	MF Train No 2 (Murray) MF Feed/CIP Supply Control Valve Open Position Status	I-88	MF VCP PLC	By Vendor		
P-00-ZLO-882	DI	24VDC	MF Train No 2 (Murray) Compressed Air Supply Valve Open Position Status	I-88	MF VCP PLC	By Vendor		
P-00-ZLO-883	DI	24VDC	MF Train No 2 (Murray) MF BW Supply Valve No 1 Open Position Status	I-88	MF VCP PLC	By Vendor		
P-00-ZLO-884	DI	24VDC	MF Train No 2 (Murray) MF BW Supply Valve No 2 Open Position Status	I-88	MF VCP PLC	By Vendor		
P-00-ZLO-886	DI	24VDC	Murray MF System Train 2 Discharge Control Valve No 1 Open Position Status	I-88	MF VCP PLC	By Vendor		
P-00-ZLO-887	DI	24VDC	Murray MF System Train 2 Discharge Control Valve No 2 Open Position Status	I-88	MF VCP PLC	By Vendor		
P-00-HS-896	DO	120VAC	MF CIP Mixing Pump Start/Stop Command	I-89	MF VCP PLC	By Vendor		
P-00-JI-895	DI	24VDC	MF CIP Tank Heater Power Status Indicator	I-89	MF VCP PLC	By Vendor		
P-00-LIT-895	AI	4-20mA	MF CIP Tank Level Indicating Transmitter	I-89	MF VCP PLC	By Vendor		
P-00-TIC-895	AI	4-20mA	MF CIP Tank Heater Temperature Indicator Controller	I-89	MF VCP PLC	By Vendor		
P-00-YA-896A	DI	24VDC	MF CIP Mixing Pump E-Stop Alarm	I-89	MF VCP PLC	By Vendor		
P-00-YA-896B	DI	24VDC	MF CIP Mixing Pump Fail Alarm	I-89	MF VCP PLC	By Vendor		
P-00-YL-896	DI	24VDC	MF CIP Mixing Pump Run Status	I-89	MF VCP PLC	By Vendor		
P-00-ZL-896	DI	24VDC	MF CIP Mixing Pump Ready Status	I-89	MF VCP PLC	By Vendor		

Ozone Destruct RIO

AI	5
AO	2
DI	13
DO	5
DS	0
DSAO	1
DSDI	4
DSDO	1

IO Tag	I/O Type	Signal Type	Description	PID Drawing No.	Processor Cabinet No.	Rack/Slot/Channel	Comments	Remark
P-00-AIT-760	AI	4-20mA	Ozone Contactor Supply Line O3 Analyzer Indicating Transmitter	I-76	Ozone Destruct RIO	By Vendor		
P-00-AIT-763	AI	4-20mA	Ozone Destruct Blower Discharge O3 Analyzer Indicating Transmitter	I-76	Ozone Destruct RIO	By Vendor		
P-00-HS-760	DO	120VAC	Ozone Contactor To Destruct Vessel Valve Actuator Open /Close Command	I-76	Ozone Destruct RIO	By Vendor		
P-00-HS-761A	DO	120VAC	Destruct Vessel Heater Start/Stop Command	I-76	Ozone Destruct RIO	By Vendor		
P-00-HS-761B	DO	120VAC	Destruct Vessel Heater Temprature Control Start/Stop Command	I-76	Ozone Destruct RIO	By Vendor		
P-00-HS-761C	DO	120VAC	Destruct Vessel Heater Temprature Control Trip Reset Command	I-76	Ozone Destruct RIO	By Vendor		
P-00-HS-762	DO	120VAC	Ozone Destruct Blower Discharge Recirculation Control Valve Open/Close Command	I-76	Ozone Destruct RIO	By Vendor		
P-00-HS-763	DSDO	EtherNet / IP	Ozone Destruct Blower Start/Stop Command	I-76	Ozone Destruct RIO	By Vendor		
P-00-II-763	DSAI	EtherNet / IP	Ozone Destruct Blower Current Indicator	I-76	Ozone Destruct RIO	By Vendor		
P-00-JI-761	DI	24VDC	Destruct Vessel Heater Power Status Indication	I-76	Ozone Destruct RIO	By Vendor		
P-00-PIC-761	AO	4-20mA	Destruct Vessel Offgas Vacuum Pressure Control	I-76	Ozone Destruct RIO	By Vendor		
P-00-PT-760	AI	4-20mA	Ozone Contactor Supply Line Offgas Vacuum Pressure Indicating Transmitter	I-76	Ozone Destruct RIO	By Vendor		
P-00-SI-763	DSAI	EtherNet / IP	Ozone Destruct Blower Speed Indicator	I-76	Ozone Destruct RIO	By Vendor		
P-00-SK-763	DSAO	EtherNet / IP	Ozone Destruct Blower Speed Setpoint	I-76	Ozone Destruct RIO	By Vendor		
P-00-TIC-761	AO	4-20mA	Destruct Vessel Heater Temprature Control	I-76	Ozone Destruct RIO	By Vendor		
P-00-TT-761	AI	4-20mA	Destruct Inlet Vessel Temperature Transmitter	I-76	Ozone Destruct RIO	By Vendor		
P-00-TT-762	AI	4-20mA	Destruct Vessel Discharge Temperature Transmitter	I-76	Ozone Destruct RIO	By Vendor		
P-00-YA-760	DI	24VDC	Ozone Contactor Supply To Destruct Vessel Control Valve Fail Alarm	I-76	Ozone Destruct RIO	By Vendor		
P-00-YA-761	DI	24VDC	Destruct Vessel Heater Overload Status Indication	I-76	Ozone Destruct RIO	By Vendor		
P-00-YA-762	DI	24VDC	Ozone Destruct Blower Discharge Recirculation Control Valve Fail Alarm	I-76	Ozone Destruct RIO	By Vendor		
P-00-YA-763A	DSDI	EtherNet / IP	Ozone Destruct Blower Fail Alarm	I-76	Ozone Destruct RIO	By Vendor		
P-00-YA-763B	DSDI	EtherNet / IP	Ozone Destruct Blower E-Stop Alarm	I-76	Ozone Destruct RIO	By Vendor		
P-00-YL-761	DI	24VDC	Destruct Vessel Heater Local Status Indication	I-76	Ozone Destruct RIO	By Vendor		
P-00-YL-761A	DI	24VDC	Destruct Vessel Heater Remote Status Indication	I-76	Ozone Destruct RIO	By Vendor		
P-00-YL-761B	DI	24VDC	Destruct Vessel Heater Run Status Indication	I-76	Ozone Destruct RIO	By Vendor		
P-00-YL-763	DSDI	EtherNet / IP	Ozone Destruct Blower Run Status Indication	I-76	Ozone Destruct RIO	By Vendor		
P-00-ZL-760	DI	24VDC	Ozone Contactor Supply To Destruct Vessel Control Valve Ready Status	I-76	Ozone Destruct RIO	By Vendor		
P-00-ZL-762	DI	24VDC	Ozone Destruct Blower Discharge Recirculation Control Valve Ready Status Indication	I-76	Ozone Destruct RIO	By Vendor		
P-00-ZL-763	DSDI	EtherNet / IP	Ozone Destruct Blower Ready Status Indication	I-76	Ozone Destruct RIO	By Vendor		
P-00-ZLC-760	DI	24VDC	Ozone Contactor Supply To Destruct Vessel Control Valve Closed Position Status	I-76	Ozone Destruct RIO	By Vendor		
P-00-ZLC-762	DI	24VDC	Ozone Destruct Blower Discharge Recirculation Control Valve Closed Position Status	I-76	Ozone Destruct RIO	By Vendor		
P-00-ZLO-760	DI	24VDC	Ozone Contactor Supply To Destruct Vessel Control Valve Open Position Status	I-76	Ozone Destruct RIO	By Vendor		
P-00-ZLO-762	DI	24VDC	Ozone Destruct Blower Discharge Recirculation Control Valve Open Position Status	I-76	Ozone Destruct RIO	By Vendor		

OZONE VCP PLC

AI	11
AO	3
DI	24
DO	6

IO Tag	I/O Type	Signal Type	Description	PID Drawing No.	Processor Cabinet No.	Wiring Diagram No.	Megablock No.	Megablock Channel No.	Terminal Block(TB) No.	TB Channel No.	Network Node	Comments	Remark
P-00-FIT-704	AI	4-20mA	Ozon Direct Injection Pump Discharge Flow Indicating Transmitter	I-71	OZONE VCP PLC								
P-00-FIT-705	AI	4-20mA	MBR Filtrate To Ozone Membrane No 1 Supply Header Flow Indicating Transmitter	I-71	OZONE VCP PLC								
P-00-FIT-706	AI	4-20mA	MBR Filtrate To Ozone Membrane No 2 Supply Header Flow Indicating Transmitter	I-71	OZONE VCP PLC								
P-00-HS-700	DO	120VAC	Ozone Direct Injection Pump Start/Stop Command	I-71	OZONE VCP PLC								
P-00-HS-711	DO	120VAC	Ozone Generator Supply To Liquid Separator Solenoid Valve On/Off Command	I-71	OZONE VCP PLC								
P-00-HS-712	DO	120VAC	Ozone Liquid Separator Discharge Control Solenoid Valve On/Off Command	I-71	OZONE VCP PLC								
P-00-HS-713	DO	120VAC	Ozone Liquid Separator Discharge To Ozone Membrane No 1 Control Solenoid Valve On/Off Command	I-71	OZONE VCP PLC								
P-00-HS-714	DO	120VAC	Ozone Liquid Separator Discharge To Ozone Membrane No 2 Control Solenoid Valve On/Off Command	I-71	OZONE VCP PLC								
P-00-LAH-710	DI	24VDC	Ozone Liquid Separator Level Alarm High	I-71	OZONE VCP PLC								
P-00-LIT-708	AI	4-20mA	Ozon Membrane No 1 Level Indicating Transmitter	I-71	OZONE VCP PLC								
P-00-LIT-709	AI	4-20mA	Ozon Membrane No 2 Level Indicating Transmitter	I-71	OZONE VCP PLC								
P-00-LSHH-708	DI	24VDC	Ozone Membrane No 1 Level Alarm High High	I-71	OZONE VCP PLC								
P-00-LSHH-709	DI	24VDC	Ozone Membrane No 2 Level Alarm High High	I-71	OZONE VCP PLC								
P-00-PIT-700	AI	4-20mA	Ozon Direct Injection Pump Discharge Pressure Indicating Transmitter No 1	I-71	OZONE VCP PLC								
P-00-PIT-707	AI	4-20mA	Ozone Direct Injection Pump Discharge Pressure Indicating Transmitter No 2	I-71	OZONE VCP PLC								
P-00-TAH-700	DI	24VDC	Ozon Direct Injection Pump Temperature Alarm High	I-71	OZONE VCP PLC								
P-00-YA-700	DI	24VDC	Ozon Direct Injection Pump Fail Alarm	I-71	OZONE VCP PLC								
P-00-YA-700A	DI	24VDC	Ozon Direct Injection Pump E-Stop Alarm	I-71	OZONE VCP PLC								
P-00-YA-707	DI	24VDC	Ozone Direct Injection Pump Discharge Flow Control Valve Fail Alarm	I-71	OZONE VCP PLC								
P-00-YA-708	DI	24VDC	MBR Filtrate Supply To Ozone Membrane No 1 Flow Control Valve Fail Alarm	I-71	OZONE VCP PLC								
P-00-YA-709	DI	24VDC	MBR Filtrate Supply To Ozone Membrane No 2 Flow Control Valve Fail Alarm	I-71	OZONE VCP PLC								
P-00-YL-700	DI	24VDC	Ozon Direct Injection Pump Run Status Indication	I-71	OZONE VCP PLC								
P-00-ZI-707	AI	4-20mA	Ozone Direct Injection Pump Discharge Flow Control Valve Position Indicator	I-71	OZONE VCP PLC								
P-00-ZI-708	AI	4-20mA	MBR Filtrate Supply To Ozone Membrane No 1 Flow Control Valve Position Indicator	I-71	OZONE VCP PLC								
P-00-ZI-709	AI	4-20mA	MBR Filtrate Supply To Ozone Membrane No 2 Flow Control Valve Position Indicator	I-71	OZONE VCP PLC								
P-00-ZK-707	AO	4-20mA	Ozone Direct Injection Pump Discharge Flow Control Valve Position Setpoint	I-71	OZONE VCP PLC								
P-00-ZK-708	AO	4-20mA	MBR Filtrate Supply To Ozone Membrane No 1 Flow Control Valve Position Setpoint	I-71	OZONE VCP PLC								
P-00-ZK-709	AO	4-20mA	MBR Filtrate Supply To Ozone Membrane No 2 Flow Control Valve Position Setpoint	I-71	OZONE VCP PLC								
P-00-ZL-700A	DI	24VDC	Ozon Direct Injection Pump Ready Status Indication	I-71	OZONE VCP PLC								
P-00-ZL-707	DI	24VDC	Ozone Direct Injection Pump Discharge Flow Control Valve Ready Status Indication	I-71	OZONE VCP PLC								
P-00-ZL-708	DI	24VDC	MBR Filtrate Supply To Ozone Membrane No 1 Flow Control Valve Ready Status Indication	I-71	OZONE VCP PLC								
P-00-ZL-709	DI	24VDC	MBR Filtrate Supply To Ozone Membrane No 2 Flow Control Valve Ready Status Indication	I-71	OZONE VCP PLC								
P-00-ZLC-707	DI	24VDC	Ozone Direct Injection Pump Discharge Flow Control Valve Closed Position Status	I-71	OZONE VCP PLC								
P-00-ZLC-708	DI	24VDC	MBR Filtrate Supply To Ozone Membrane No 1 Flow Control Valve Closed Position Status	I-71	OZONE VCP PLC								
P-00-ZLC-709	DI	24VDC	MBR Filtrate Supply To Ozone Membrane No 2 Flow Control Valve Closed Position Status	I-71	OZONE VCP PLC								
P-00-ZLO-707	DI	24VDC	Ozone Direct Injection Pump Discharge Flow Control Valve Open Position Status	I-71	OZONE VCP PLC								
P-00-ZLO-708	DI	24VDC	MBR Filtrate Supply To Ozone Membrane No 1 Flow Control Valve Open Position Status	I-71	OZONE VCP PLC								
P-00-ZLO-709	DI	24VDC	MBR Filtrate Supply To Ozone Membrane No 2 Flow Control Valve Open Position Status	I-71	OZONE VCP PLC								
P-00-FSL-725	DI	24VDC	Chiller Assembly Evaporator Discharge Flow Alarm Low	I-72	OZONE VCP PLC								
P-00-HS-725	DO	120VAC	Chiller Assembly Pump Start/Stop Command	I-72	OZONE VCP PLC								
P-00-TIT-725	AI	4-20mA	Chiller Assembly Evaporator Discharge Temperature Indicating Transmitter	I-72	OZONE VCP PLC								
P-00-YA-725	DI	24VDC	Chiller Assembly Pump Fail Alarm	I-72	OZONE VCP PLC								
P-00-YL-725	DI	24VDC	Chiller Assembly Pump Run Status Indication	I-72	OZONE VCP PLC								
P-00-ZL-725A	DI	24VDC	Chiller Assembly Pump Ready Status Indication	I-72	OZONE VCP PLC								

Pretreatment Strainer VCP PLC

AI	1
DI	28
DO	10

IO Tag	I/O Type	Signal Type	Description	PID Drawing No.	Processor Cabinet No.	Wiring Diagram No.	Megablock No.	Megablock Channel No.	Terminal Block(TB) No.	TB Channel No.	Network Node	Comments	Remark
P-00-TI-015	AI	4-20mA	Pretreatment Strainer VCP Temperature Indicator	I-194	Pretreatment Strainer VCP PLC								
P-00-XA-015	DI	24VDC	Pretreatment Strainer VCP Intrusion Alarm	I-194	Pretreatment Strainer VCP PLC								
P-00-YA-015A	DI	24VDC	Pretreatment Strainer VCP PS1 24VDC Primary Power Fail Alarm	I-194	Pretreatment Strainer VCP PLC								
P-00-YA-015C	DI	24VDC	Pretreatment Strainer VCP Redundancy Module Fail Alarm	I-194	Pretreatment Strainer VCP PLC								
P-00-YA-015D	DI	24VDC	Pretreatment Strainer VCP Ethernet Switch Major Alarm	I-194	Pretreatment Strainer VCP PLC								
P-00-HS-370	DO	120VAC	Pretreatment Self-Cleaning Strainer No 1 BW Cycle Start/Stop Command	I-34	Pretreatment Strainer VCP PLC								
P-00-HS-371A	DO	120VAC	Pretreatment Self-Cleaning Strainer No 1 BW Drain Valve Open Command	I-34	Pretreatment Strainer VCP PLC								
P-00-HS-371B	DO	120VAC	Pretreatment Self-Cleaning Strainer No 1 BW Drain Valve Close Command	I-34	Pretreatment Strainer VCP PLC								
P-00-HS-372A	DO	120VAC	Pretreatment Self-Cleaning Strainer No 1 BW Outlet Valve Open Command	I-34	Pretreatment Strainer VCP PLC								
P-00-HS-372B	DO	120VAC	Pretreatment Self-Cleaning Strainer No 1 BW Outlet Valve Close Command	I-34	Pretreatment Strainer VCP PLC								
P-00-HS-380	DO	120VAC	Pretreatment Self-Cleaning Strainer No 2 BW Cycle Start/Stop Command	I-34	Pretreatment Strainer VCP PLC								
P-00-HS-381A	DO	120VAC	Pretreatment Self-Cleaning Strainer No 2 BW Drain Valve Open Command	I-34	Pretreatment Strainer VCP PLC								
P-00-HS-381B	DO	120VAC	Pretreatment Self-Cleaning Strainer No 2 BW Drain Valve Close Command	I-34	Pretreatment Strainer VCP PLC								
P-00-HS-382A	DO	120VAC	Pretreatment Self-Cleaning Strainer No 2 BW Outlet Valve Open Command	I-34	Pretreatment Strainer VCP PLC								
P-00-HS-382B	DO	120VAC	Pretreatment Self-Cleaning Strainer No 2 BW Outlet Valve Close Command	I-34	Pretreatment Strainer VCP PLC								
P-00-PDAH-370	DI	24VDC	Pretreatment Self-Cleaning Strainer No 1 Differential Pressure Alarm High	I-34	Pretreatment Strainer VCP PLC								
P-00-PDAH-380	DI	24VDC	Pretreatment Self-Cleaning Strainer No 2 Differential Pressure Alarm High	I-34	Pretreatment Strainer VCP PLC								
P-00-YA-370	DI	24VDC	Pretreatment Self-Cleaning Strainer No 1 BW Cycle Overload Status Indication	I-34	Pretreatment Strainer VCP PLC								
P-00-YA-371	DI	24VDC	Pretreatment Self-Cleaning Strainer No 1 BW Drain Valve Fail Alarm	I-34	Pretreatment Strainer VCP PLC								
P-00-YA-372	DI	24VDC	Pretreatment Self-Cleaning Strainer No 1 BW Outlet Valve Fail Alarm	I-34	Pretreatment Strainer VCP PLC								
P-00-YA-380	DI	24VDC	Pretreatment Self-Cleaning Strainer No 2 BW Cycle Overload Status Indication	I-34	Pretreatment Strainer VCP PLC								
P-00-YA-381	DI	24VDC	Pretreatment Self-Cleaning Strainer No 2 BW Drain Valve Fail Alarm	I-34	Pretreatment Strainer VCP PLC								
P-00-YA-382	DI	24VDC	Pretreatment Self-Cleaning Strainer No 2 BW Outlet Valve Fail Alarm	I-34	Pretreatment Strainer VCP PLC								
P-00-YL-370A	DI	24VDC	Pretreatment Self-Cleaning Strainer No 1 BW Cycle On Status Indication	I-34	Pretreatment Strainer VCP PLC								
P-00-YL-370B	DI	24VDC	Pretreatment Self-Cleaning Strainer No 1 BW Cycle Auto Status Indication	I-34	Pretreatment Strainer VCP PLC								
P-00-YL-371	DI	24VDC	Pretreatment Self-Cleaning Strainer No 1 BW Drain Valve Auto Status Indication	I-34	Pretreatment Strainer VCP PLC								
P-00-YL-372	DI	24VDC	Pretreatment Self-Cleaning Strainer No 1 BW Outlet Valve Auto Status Indication	I-34	Pretreatment Strainer VCP PLC								
P-00-YL-380A	DI	24VDC	Pretreatment Self-Cleaning Strainer No 2 BW Cycle On Status Indication	I-34	Pretreatment Strainer VCP PLC								
P-00-YL-380B	DI	24VDC	Pretreatment Self-Cleaning Strainer No 2 BW Cycle Auto Status Indication	I-34	Pretreatment Strainer VCP PLC								
P-00-YL-381	DI	24VDC	Pretreatment Self-Cleaning Strainer No 2 BW Drain Valve Auto Status Indication	I-34	Pretreatment Strainer VCP PLC								
P-00-YL-382	DI	24VDC	Pretreatment Self-Cleaning Strainer No 2 BW Outlet Valve Auto Status Indication	I-34	Pretreatment Strainer VCP PLC								
P-00-ZLC-371	DI	24VDC	Pretreatment Self-Cleaning Strainer No 1 BW Drain Valve Closed Position Status	I-34	Pretreatment Strainer VCP PLC								
P-00-ZLC-372	DI	24VDC	Pretreatment Self-Cleaning Strainer No 1 Bw Outlet Valve Closed Position Status	I-34	Pretreatment Strainer VCP PLC								
P-00-ZLC-381	DI	24VDC	Pretreatment Self-Cleaning Strainer No 2 BW Drain Valve Closed Position Status	I-34	Pretreatment Strainer VCP PLC								
P-00-ZLC-382	DI	24VDC	Pretreatment Self-Cleaning Strainer No 2 BW Outlet Valve Closed Position Status	I-34	Pretreatment Strainer VCP PLC								
P-00-ZLO-371	DI	24VDC	Pretreatment Self-Cleaning Strainer No 1 BW Drain Valve Open Position Status	I-34	Pretreatment Strainer VCP PLC								
P-00-ZLO-372	DI	24VDC	Pretreatment Self-Cleaning Strainer No 1 Bw Outlet Valve Open Position Status	I-34	Pretreatment Strainer VCP PLC								
P-00-ZLO-381	DI	24VDC	Pretreatment Self-Cleaning Strainer No 2 BW Drain Valve Open Position Status	I-34	Pretreatment Strainer VCP PLC								
P-00-ZLO-382	DI	24VDC	Pretreatment Self-Cleaning Strainer No 2 BW Outlet Valve Open Position Status	I-34	Pretreatment Strainer VCP PLC								

Primary Influent Strainer VCP PLC

AI	1
DI	6

IO Tag	I/O Type	Signal Type	Description	PID Drawing No.	Processor Cabinet No.	Wiring Diagram No.	Megablock No.	Megablock Channel No.	Terminal Block(TB) No.	TB Channel No.	Network Node	Comments	Remark
P-00-TI-014	AI	4-20mA	Primary Influent Strainer VCP Temperature Indicator	I-194	Primary Influent Strainer VCP PLC								
P-00-XA-014	DI	24VDC	Primary Influent Strainer VCP Intrusion Alarm	I-194	Primary Influent Strainer VCP PLC								
P-00-YA-014A	DI	24VDC	Primary Influent Strainer VCP PS1 24VDC Primary Power Fail Alarm	I-194	Primary Influent Strainer VCP PLC								
P-00-YA-014B	DI	24VDC	Primary Influent Strainer VCP PS2 24VDC Secondary Power Fail Alarm	I-194	Primary Influent Strainer VCP PLC								
P-00-YA-014C	DI	24VDC	Primary Influent Strainer VCP Redundancy Module Fail Alarm	I-194	Primary Influent Strainer VCP PLC								
P-00-YA-014D	DI	24VDC	Primary Influent Strainer VCP Ethernet Switch Major Alarm	I-194	Primary Influent Strainer VCP PLC								
P-00-YA-015B	DI	24VDC	Pretreatment Strainer VCP PS2 24VDC Secondary Power Fail Alarm	I-194	Primary Influent Strainer VCP PLC								

Primay Influent Self-Cleaning Strainer VCP PLC

DI	12
DO	5

IO Tag	I/O Type	Signal Type	Description	PID Drawing No.	Processor Cabinet No.	Wiring Diagram No.	Megablock No.	Megablock Channel No.	Terminal Block(TB) No.	TB Channel No.	Network Node	Comments	Remark
P-00-HS-330	DO	120VAC	Primary Influent Self-Cleaning Strainer BW Cycle Start/Stop Command	I-32	Primay Influent Self-Cleaning Strainer VCP PLC								
P-00-HS-331A	DO	120VAC	Primary Influent Self-Cleaning Strainer BW Outlet Valve Open Command	I-32	Primay Influent Self-Cleaning Strainer VCP PLC								
P-00-HS-331B	DO	120VAC	Primary Influent Self-Cleaning Strainer BW Outlet Valve Close Command	I-32	Primay Influent Self-Cleaning Strainer VCP PLC								
P-00-HS-332A	DO	120VAC	Primary Influent Self-Cleaning Strainer BW Drain Valve Open Command	I-32	Primay Influent Self-Cleaning Strainer VCP PLC								
P-00-HS-332B	DO	120VAC	Primary Influent Self-Cleaning Strainer BW Drain Valve Close Command	I-32	Primay Influent Self-Cleaning Strainer VCP PLC								
P-00-PDAH-331	DI	24VDC	Primary Influent Self-Cleaning Strainer Differential Pressure Alarm High Indicator	I-32	Primay Influent Self-Cleaning Strainer VCP PLC								
P-00-YA-330	DI	24VDC	Primary Influent Self-Cleaning Strainer BW Cycle Overload Alarm	I-32	Primay Influent Self-Cleaning Strainer VCP PLC								
P-00-YA-331	DI	24VDC	Primary Influent Self-Cleaning Strainer BW Outlet Valve Fail Alarm	I-32	Primay Influent Self-Cleaning Strainer VCP PLC								
P-00-YA-332	DI	24VDC	Primary Influent Self-Cleaning Strainer Bw Drain Valve Fail Alarm	I-32	Primay Influent Self-Cleaning Strainer VCP PLC								
P-00-YL-330A	DI	24VDC	Primary Influent Self-Cleaning Strainer BW Cycle Run Status Indication	I-32	Primay Influent Self-Cleaning Strainer VCP PLC								
P-00-YL-330B	DI	24VDC	Primary Influent Self-Cleaning Strainer BW Cycle Auto Status Indication	I-32	Primay Influent Self-Cleaning Strainer VCP PLC								
P-00-YL-331	DI	24VDC	Primary Influent Self-Cleaning Strainer BW Outlet Valve Auto Status Indication	I-32	Primay Influent Self-Cleaning Strainer VCP PLC								
P-00-YL-332	DI	24VDC	Primary Influent Self-Cleaning Strainer Bw Drain Valve Auto Status Indication	I-32	Primay Influent Self-Cleaning Strainer VCP PLC								
P-00-ZLC-331	DI	24VDC	Primary Influent Self-Cleaning Strainer BW Outlet Valve Closed Position Status	I-32	Primay Influent Self-Cleaning Strainer VCP PLC								
P-00-ZLC-332	DI	24VDC	Primary Influent Self-Cleaning Strainer Bw Drain Valve Closed Position Status	I-32	Primay Influent Self-Cleaning Strainer VCP PLC								
P-00-ZLO-331	DI	24VDC	Primary Influent Self-Cleaning Strainer BW Outlet Valve Open Position Status	I-32	Primay Influent Self-Cleaning Strainer VCP PLC								
P-00-ZLO-332	DI	24VDC	Primary Influent Self-Cleaning Strainer BW Drain Valve Open Position Status	I-32	Primay Influent Self-Cleaning Strainer VCP PLC								

UV System No 1 VCP PLC

	AI	9											
	DI	7											
IO Tag	**I/O Type**	**Signal Type**	**Description**	**PID Drawing No.**	**Processor Cabinet No.**	**Wiring Diagram No.**	**Megablock No.**	**Megablock Channel No.**	**Terminal Block(TB) No.**	**TB Channel No.**	**Network Node**	**Comments**	**Remark**
P-00-AIT-1100	AI	4-20mA	UV-AOP Reactor No 1 UVI Analyzer Indicating Transmitter	I-111	UV System No 1 VCP PLC								
P-00-AIT-1102	AI	4-20mA	UV-AOP Reactor No 1 Murray RO Permeate Header TCL Analyzer Indicating Transmitter	I-111	UV System No 1 VCP PLC								
P-00-AIT-1105	AI	4-20mA	UV-AOP Reactor No 1 Inlet Header UVT Analyzer Indicating Transmitter	I-111	UV System No 1 VCP PLC								
P-00-AIT-1106	AI	4-20mA	UV-AOP Reactor No 1 Inlet Header FCL Analyzer Indicating Transmitter	I-111	UV System No 1 VCP PLC								
P-00-AIT-1107	AI	4-20mA	UV-AOP Reactor No 1 Inlet Header TCL Analyzer Indicating Transmitter	I-111	UV System No 1 VCP PLC								
P-00-AIT-1108	AI	4-20mA	UV-AOP Reactor No 1 Discharge TCL Analyzer Indicating Transmitter	I-111	UV System No 1 VCP PLC								
P-00-FIT-1101	AI	4-20mA	Murray RO Permeate Header Flow Indicating Transmitter	I-111	UV System No 1 VCP PLC								
P-00-LAL-1100	DI	24VDC	UV-AOP Reactor No 1 Level Alarm Low	I-111	UV System No 1 VCP PLC								
P-00-TIT-1100	AI	4-20mA	UV-AOP Reactor No 1 Temperature Indicating Transmitter	I-111	UV System No 1 VCP PLC								
P-00-YA-1100	DI	24VDC	UV-AOP Reactor No 1 Fail Alarm	I-111	UV System No 1 VCP PLC								
P-00-TI-010	AI	4-20mA	UV System No 1 VCP (Murray) Temperature Indicator	I-193	UV System No 1 VCP PLC								
P-00-XA-010	DI	24VDC	UV System No 1 VCP (Murray) Intrusion Alarm	I-193	UV System No 1 VCP PLC								
P-00-YA-010A	DI	24VDC	UV System No 1 VCP (Murray) PS1 24VDC Primary Power Fail Alarm	I-193	UV System No 1 VCP PLC								
P-00-YA-010B	DI	24VDC	UV System No 1 VCP (Murray) PS2 24VDC Secondary Power Fail Alarm	I-193	UV System No 1 VCP PLC								
P-00-YA-010C	DI	24VDC	UV System No 1 VCP (Murray) Redundancy Module Fail Alarm	I-193	UV System No 1 VCP PLC								
P-00-YA-010D	DI	24VDC	UV System No 1 VCP (Murray) Ethernet Switch Major Alarm	I-193	UV System No 1 VCP PLC								

UV System No 2 VCP PLC

AI	9
DI	7

IO Tag	I/O Type	Signal Type	Description	PID Drawing No.	Processor Cabinet No.	Wiring Diagram No.	Megablock No.	Megablock Channel No.	Terminal Block(TB) No.	TB Channel No.	Network Node	Comments	Remark
P-00-AIT-1120	AI	4-20mA	UV-AOP Reactor No 2 UVI Analyzer Indicating Transmitter	I-112	UV System No 2 VCP PLC								
P-00-AIT-1122	AI	4-20mA	UV-AOP Reactor No 2 San Vicente RO Permeate Header TCL Analyzer Indicating Transmitter	I-112	UV System No 2 VCP PLC								
P-00-AIT-1125	AI	4-20mA	UV-AOP Reactor No 2 Inlet Header UVT Analyzer Indicating Transmitter	I-112	UV System No 2 VCP PLC								
P-00-AIT-1126	AI	4-20mA	UV-AOP Reactor No 2 Inlet Header FCL Analyzer Indicating Transmitter	I-112	UV System No 2 VCP PLC								
P-00-AIT-1127	AI	4-20mA	UV-AOP Reactor No 2 Inlet Header TCL Analyzer Indicating Transmitter	I-112	UV System No 2 VCP PLC								
P-00-AIT-1128	AI	4-20mA	UV-AOP Reactor No 2 Discharge TCL Analyzer Indicating Transmitter	I-112	UV System No 2 VCP PLC								
P-00-FIT-1121	AI	4-20mA	San Vicente RO Permeate Header Flow Indicating Transmitter	I-112	UV System No 2 VCP PLC								
P-00-LAL-1120	DI	24VDC	UV-AOP Reactor No 2 Level Alarm Low	I-112	UV System No 2 VCP PLC								
P-00-TIT-1120	AI	4-20mA	UV-AOP Reactor No 2 Temperature Indicating Transmitter	I-112	UV System No 2 VCP PLC								
P-00-YA-1120	DI	24VDC	UV-AOP Reactor No 2 Fail Alarm	I-112	UV System No 2 VCP PLC								
P-00-TI-011	AI	4-20mA	UV VCP No 2 VCP (San Vicente) Temperature Indicator	I-193	UV System No 2 VCP PLC								
P-00-XA-011	DI	24VDC	UV VCP No 2 VCP (San Vicente) Intrusion Alarm	I-193	UV System No 2 VCP PLC								
P-00-YA-011A	DI	24VDC	UV VCP No 2 VCP (San Vicente) PS1 24VDC Primary Power Fail Alarm	I-193	UV System No 2 VCP PLC								
P-00-YA-011B	DI	24VDC	UV VCP No 2 VCP (San Vicente) PS2 24VDC Secondary Power Fail Alarm	I-193	UV System No 2 VCP PLC								
P-00-YA-011C	DI	24VDC	UV VCP No 2 VCP (San Vicente) Redundancy Module Fail Alarm	I-193	UV System No 2 VCP PLC								
P-00-YA-011D	DI	24VDC	UV VCP No 2 VCP (San Vicente) Ethernet Switch Major Alarm	I-193	UV System No 2 VCP PLC								

SECTION 40 91 02

IN-LINE LIQUID FLOW MEASURING SYSTEMS

PART 1 – GENERAL

1.01 THE REQUIREMENT

A. General**:** The CONTRACTOR shall furnish and install all in-line liquid flow measuring systems, complete and operable, in accordance with the Contract Documents.

B. The requirements of Section 40 91 00 - PROCESS CONTROL AND INSTRUMENTATION SYSTEMS apply to this Section.

1.02 CONTRACTOR SUBMITTALS

A. General: The CONTRACTOR shall furnish submittals in accordance with Section 40 91 00 - PROCESS CONTROL AND INSTRUMENTATION SYSTEMS

1.03 QUALITY ASSURANCE

A. General: The accuracy of each instrumentation system or loop shall conform to the requirements of Section 40 91 00 - PROCESS CONTROL AND INSTRUMENTATION SYSTEMS

1.04 MANUFACTURER'S REPRESENTATIVE SERVICES

A. General: Manufacturers representative services shall conform to the requirements of Section 40 91 00 - PROCESS CONTROL AND INSTRUMENTATION SYSTEMS.

1.05 PRODUCT HANDLING

A. General: Product handling shall conform to the requirements of Section 40 91 00 - PROCESS CONTROL AND INSTRUMENTATION SYSTEMS.

1.06 GUARANTEE

A. General: Guarantees shall conform to the requirements of Section 40 91 00 - PROCESS CONTROL AND INSTRUMENTATION SYSTEMS.

PART 2 – PRODUCTS

2.01 GENERAL

A. All devices specified herein shall conform to the requirements of the Contract Documents.

2.02 MAGNETIC FLOW MEASURING SYSTEMS

A. Magnetic Flowmeter (Tube Type):

1. Magnetic flowmeter systems shall be of the low frequency electromagnetic induction type and produce a DC pulsed signal directly proportional to and linear with the liquid flow rate. Complete zero stability shall be an inherent characteristic of the flowmeter system. Each magnetic flow metering system shall include a metering tube, signal cable, and transmitter. The metering tube shall be constructed of 304 stainless steel with flanged connections, have at least 2 diametrically opposed, bullet-nosed, self-cleaning electrodes, a liner material recommended by the manufacturer for the meter's intended service as described in these documents, a meter housing rated for NEMA 6 submergence conditions, and a meter coating consisting of epoxy painted finish.
2. The signal converter/transmitter shall use a DC pulse technique to drive flux-producing coils and convert the DC pulse signal from the tube to a 4-20 mA signal. The signal converter/transmitter shall have a backlit alphanumeric display housed in a NEMA 4X enclosure. It shall have integral zero return to provide a constant zero output signal in response to an external dry contact closure, an integral calibration self-test feature to verify proper operation of the electronics, high and low alarms and an automatic zero adjustment. The transmitter installation shall support integral or remote mounting (up to 300ft). Meter package shall include (2) corrosion resistant grounding rings constructed of the same material as the electrodes.
3. The meter shall be equipped with non-removable electrodes constructed of Hastelloy C. The meter shall support measurement and totalization of bi-directional flow. Installation parameters shall be as follows:
   a. Minimum 5 pipe diameters of straight pipe upstream
   b. Minimum 2 pipe diameters of straight pipe downstream
   c. Horizontal mounting only
   d. Support for lines sizes from 1-inch to 120-inches
4. Each flow metering system shall be hydraulically calibrated at a facility which is traceable to the US National Bureau of Standards. The calibration procedure shall conform to the requirements of MIL-STD-45662A and/or the more recent ANSI/NCSL Z540-1 or ISO 10012-1 requirements. A real-time computer generated printout of the actual calibration data indicating apparent and actual flows at 20, 40, 60, 80, and 100 percent of the calibrated range shall be submitted to the Engineer at least 14 days prior to shipment of the meters to the project site.
5. The flow metering system shall conform to the following technical specifications:

Output:	1. (1) 4-20 mA into 600 ohms minimum; Time Constant = 0.5 to 100 seconds; galvanic or optic isolation
	2. Scaled pulsed output for totalization
	3. HART protocol compatible
Accuracy:	± 0.25% of flow rate from 10 to 100% full scale

Repeatability: ± 0.05% at ± 0.0008 ft/s

Environmental Limits: - 10 to + 60º C

Power Consumption: 20VA or less

Power Requirements: 24Vdc, +/- 10%

Accessories:

1. Furnish and install stainless steel sunshield for outdoor/exposed transmitter.
2. Furnish remote mount flow transmitter with a minimum cable length of 50 feet where indicated on contract drawings.
3. Provide stainless steel stanchions for mounting of remote transmitter no less than 4 feet above grade (reference mounting details on Installation Detail sheets).
4. Provide manufacturer digital calibration verification unit with necessary accessories to interface with the furnished magnetic flow meter.
5. Furnish one spool piece for every size magmeter supplied.

Magnetic flow measuring systems shall be as manufactured by:

1. Endress & Hauser – Model Promag W 400 for water applications; Model Promag H 100 for chemical applications

2. Rosemount 8700 Series

3. Or approved equal

Refer to Appendix A of Section 40 91 00 - Process Control and Instrumentation Systems for the complete instrument schedule.

2.03 ROTAMETER LIQUID FLOW MEASURING SYSTEMS

A. General

1. Rotameters in chemical solution lines and where indicated shall have vertical bottom Inlets and top outlets with ANSI 150-lb flanged ends for vertical mounting.
2. The meters shall have Hastelloy C floats, 10-inch long scales, and a range of 10:1 with an accuracy of plus or minus 2 percent. Meters shall be rated for a minimum working pressure of 150 psi. Flanged rotameters for chemical solutions and where indicated shall be calibrated in gallons per minute.

3. The bodies shall have union ends for ease of maintenance, polysulphone tubes, aluminum or brass end fittings, Type 316 stainless steel internal parts and scales suitable for the indicated capacity range.
4. The meters shall have an accuracy of not less than plus and minus 5 percent over the capacity range indicated.

B. Application Requirements
1. Meters in air and pump seal flushing lines shall be of the modified rotameter design with screwed ends, spring-loaded pistons, and union bodies for mounting in any position.
2. For activated carbon solution, bodies shall be Type 316 stainless steel construction with magnetically actuated float and scale.
3. For preformed chloramines lines, bodies shall be molded ultrapure polysulphone with PTFE float. No metal in flow path.
4. For other chemicals, bodies shall have Type 316 stainless steel ends with heavy borosilicate glass tubes and packing glands or other best suitable material.
5. Rotameters with NPT screwed ends for water, air, and fuel gas service shall be calibrated in gallons per minute or cubic feet per minute. The scales shall be suitable for the capacity ranges indicated.

C. Approved Manufacturers:
1. Chemicals: Brooks GT160x Series or approved equal.
2. Preformed chloramine lines: Blue-White F-460 or approved equal.
3. Water service: Headland-Badger variable area "In-Line" Meters or approved equal.

D. Refer to Appendix A of Section 40 91 00 - PROCESS CONTROL AND INSTRUMENTATION SYSTEMS for the complete instrument schedule.

2.04 INSERTION TYPE THERMAL MASS FLOW METERS

A. Meter assembly shall consist of an insert-type air flow sensor, Nema 4X transmitter with local display, flanged flow conditioner spool piece and all appurtenances required to meet the manufacturer installation requirements.

B. The system shall automatically determine the mass flow rate past the sensing points through comparison of the temperatures at the heated and unheated RTDs. The flow conditioner spool piece shall be designed to minimize flow profile irregularities (i.e. swirl) with minimum system pressure loss. Spool piece material and diameter shall match process pipe with minimum length of 8 nominal pipe diameters per manufacturer requirements.

C. The flow element shall be constructed of 316 stainless steel with a 3/4-inch stainless steel male NPT compression fitting process connection. The sensor shall be rated for 0-250 psig at -40° C to 177° C. The sensor shall have a field adjustable length of 1- to 21-inches. The transmitter shall be housed within a powder-coated aluminum Nema 4X enclosure and shall have an LCD display indicating flow rate and temperature. The transmitter shall output an isolated 4-20mA signal proportional to

the measured air flow and may be remotely mounted up to 500-feet from the sensor. Input power shall be 120 VAC. Accuracy shall be ±1 percent of reading. Repeatability shall be ±0.5 percent of reading. The unit shall have an adjustable field turn down from 10:1 to 100:1 within calibrated flow range. The transmitter shall have an integral RS-232 port, shall be furnished with a handheld programmer and shall be HART protocol compliant.

D. All hardware and accessories necessary for mounting the probes, transmitters and spool piece shall be provided.

E. Manufacturer shall furnish all electrical cables necessary to connect the sensor probe to the transmitter.

F. The thermal mass flow meter shall be as manufactured by:
   1. FCI Model ST98 with VMR flow conditioner and Model FC88 hand-held plug-in interface
   2. Sierra FlatTrak 780S with configuration software
   3. Or approved equal

G. All instrument fittings shall be leak tested at maximum system pressure prior to system performance testing. Refer to Appendix A of Section 40 91 00 - PROCESS CONTROL AND INSTRUMENTATION SYSTEMS for the complete instrument schedule.

PART 3 – EXECUTION

3.01 GENERAL

A. Electrical interface and code compliance shall conform to the requirements of Section 40 91 00 - PROCESS CONTROL AND INSTRUMENTATION SYSTEMS.

3.02 CALIBRATION

A. The calibration of all devices shall conform to the requirements of Section 40 91 00 - PROCESS CONTROL AND INSTRUMENTATION SYSTEMS.

3.03 INSTALLATION

A. The installation of all devices shall conform to the requirements of Section 40 91 00 - PROCESS CONTROL AND INSTRUMENTATION SYSTEMS.

3.04 LOOP TESTING

A. The loop testing of all devices shall conform to the requirements of Section 40 91 00 - PROCESS CONTROL AND INSTRUMENTATION SYSTEMS.

3.05 PRECOMMISSIONING

A. The pre-commissioning of all devices shall conform to the requirements of Section 40 91 00 - PROCESS CONTROL AND INSTRUMENTATION SYSTEMS.

3.06 ON-SITE SUPERVISION

A. On-site supervision shall conform to the requirements of Section 40 91 00 - PROCESS CONTROL AND INSTRUMENTATION SYSTEMS.

3.07 PERFORMANCE TESTING

A. On-site performance tests shall conform to the requirements of Section 40 91 00 - PROCESS CONTROL AND INSTRUMENTATION SYSTEMS.

3.08 RECORD DRAWINGS

A. Record drawings shall conform to the requirements of Section 40 91 00 - PROCESS CONTROL AND INSTRUMENTATION SYSTEMS.

3.09 TRAINING

A. Training shall conform to the requirements of Section 40 91 00 - PROCESS CONTROL AND INSTRUMENTATION SYSTEMS.

3.10 ACCEPTANCE

A. Acceptance shall conform to the requirements of Section 40 91 00 - PROCESS CONTROL AND INSTRUMENTATION SYSTEMS.

END OF SECTION

SECTION 40 91 03

LIQUID FLOW DETECTION DEVICES

PART 1 GENERAL

1.01 THE REQUIREMENT

A. General: The CONTRACTOR shall furnish and install all in-line liquid flow detection systems, complete and operable, in accordance with the Contract Documents.

B. The requirements of Section 40 91 00 – PROCESS CONTROL AND INSTRUMENTATION SYSTEMS apply to this Section.

1.02 CONTRACTOR SUBMITTALS

A. General**:** In addition to the Shop Drawing requirements of Section 40 91 00 – Process Control and Instrumentation Systems, the CONTRACTOR shall furnish submittals in accordance with Section 40 91 00 – PROCESS CONTROL AND INSTRUMENTATION SYSTEMS.

1.03 QUALITY ASSURANCE

A. General**:** The accuracy of each instrumentation system or loop shall conform to the requirements of Section 40 91 00 – PROCESS CONTROL AND INSTRUMENTATION SYSTEMS.

1.04 MANUFACTURER'S REPRESENTATIVE SERVICES

A. General**:** Manufacturers representative services shall conform to the requirements of Section 40 91 00 – PROCESS CONTROL AND INSTRUMENTATION SYSTEMS.

1.05 PRODUCT HANDLING

A. General**:** Product handling shall conform to the requirements of Section 40 91 00 – PROCESS CONTROL AND INSTRUMENTATION SYSTEMS.

1.06 GUARANTEE

A. General**:** Guarantees shall conform to the requirements of Section 40 91 00 – PROCESS CONTROL AND INSTRUMENTATION SYSTEMS.

PART 2 PRODUCTS

2.01 PADDLE FLOW SWITCHES

A. Paddle switches shall be activated by paddles in a pipe flow stream. Wetted materials shall be 316 SS. Minimum pressure rating shall be 250 psi. Unit shall have two SPDT switches rated 20 VA minimum. The actuation point between "flow" and "no flow" shall be adjustable. Flow switches shall be suitable for use in the indicated pipe sizes and shall have a 1 1/2-inch MNPT process connections.

B. Flow switches shall be installed horizontally and upright with threaded tee connection with no less than 5 pipe diameters upstream and downstream of the instrument. Flow switches shall be rated Nema 4X or Nema 7 as required by the installation area classification.

C. Flow switches shall be as manufactured by:

1. McDonnell & Miller Series FS7-W, FS7-4W or FS7-4E (depending on area classification)
2. Or approved equal.

D. Refer to Appendix A of Section 40 91 00 – PROCESS CONTROL AND INSTRUMENTATION SYSTEMS for the complete instrument schedule.

2.02 THERMAL FLOW SWITCHES

A. Thermal flow switches shall be thermal dispersion type with no moving parts. Flow shall be detected by measuring the differential temperature between two RTD's while maintaining a constant current to the heater. The probes, electronic circuits, and relay shall all be part of an integral unit with a non-ferrous cast housing. Wetted parts shall be constructed of 316SS or Hastelloy C depending on chemical compatibility with the process. In horizontal pipe runs the unit shall be side mounted. All switches shall be equipped to function in an environment where the probes are not always immersed. Output relay shall be configurable to energize on increasing or decreasing flow and have (1) DPDT or (2) SPDT contacts rated 2A, 120 VAC minimum. Contact transfer point shall be field adjustable from .003 -19 gpm in water. Response time shall be adjustable from 0.5 to 150 seconds. The trip flow point shall not be affected by process fluid changes in the range of 32 to 140 degrees F and shall have a repeatability of plus or minus 5 percent. The contact unit shall operate within the indicated repeatability in an ambient temperature range of 25 to 120 degrees F. The unit shall have a pressure rating of 150 psi or greater and shall be suitable for installation in pipe sizes of 0.5-inch diameter and greater. Unit shall include 120V AC power supply in a stainless steel NEMA-4X box.

B. Thermal flow switch with flanged fittings (material to match installation pipe) shall be as manufactured by:

1. Fluid Components, Inc. Model FLT93L Series

2. Or approved equal.

C. Thermal Flow Switches shall be provided for all eyewash/shower flow detection applications depicted in the contract drawings, appropriately rated to detect minimum flow associated with eyewash operation only. Refer to Appendix A of Section 40 91 00 - PROCESS CONTROL AND INSTRUMENTATION SYSTEMS for the complete instrument schedule.

PART 3 EXECUTION

3.01 GENERAL

A. Electrical interface and code compliance shall conform to the requirements of Section 40 91 00 - PROCESS CONTROL AND INSTRUMENTATION SYSTEMS.

3.02 CALIBRATION

A. The calibration of all devices shall conform to the requirements of Section 40 91 00 – PROCESS CONTROL AND INSTRUMENTATION SYSTEMS.

3.03 INSTALLATION

A. The installation of all devices shall conform to the requirements of Section 40 91 00 – PROCESS CONTROL AND INSTRUMENTATION SYSTEMS.

3.04 LOOP TESTING

A. The loop testing of all devices shall conform to the requirements of Section 40 91 00 – PROCESS CONTROL AND INSTRUMENTATION SYSTEMS.

3.05 PRECOMMISSIONING

A. The pre-commissioning of all devices shall conform to the requirements of Section 40 91 00 – PROCESS CONTROL AND INSTRUMENTATION SYSTEMS.

3.06 ON-SITE SUPERVISION

A. The on-site supervision of all devices shall conform to the requirements of Section 40 91 00 – PROCESS CONTROL AND INSTRUMENTATION SYSTEMS.

3.07 PERFORMANCE TESTING

A. The performance testing of all devices shall conform to the requirements of Section 40 91 00 – PROCESS CONTROL AND INSTRUMENTATION SYSTEMS.

3.08 RECORD DRAWINGS

A. Record Drawings shall conform to the requirements of Section 40 91 00 – PROCESS CONTROL AND INSTRUMENTATION SYSTEMS.

3.09 TRAINING

A. Training for all equipment and software shall conform to the requirements of Section 40 91 00 – PROCESS CONTROL AND INSTRUMENTATION SYSTEMS.

3.10 ACCEPTANCE

A. All acceptance testing shall conform to the requirements of Section 40 91 00 – PROCESS CONTROL AND INSTRUMENTATION SYSTEMS.

END OF SECTION

SECTION 40 91 06
LEVEL MEASURING SYSTEMS

PART 1 — GENERAL

1.01 THE REQUIREMENT

A. General: The Contractor shall provide liquid level measuring systems, complete and operable, in accordance with the Contract Documents.

B. The requirements of Section 40 91 00 - PROCESS CONTROL AND INSTRUMENTATION SYSTEMS apply to this Section.

1.02 Contractor SUBMITTALS

A. The Contractor shall furnish submittals in accordance with Section 40 91 00. – PROCESS CONTROL AND INSTRUMENTATION SYSTEMS.

1.03 QUALITY ASSURANCE

A. General**:** The accuracy of each instrumentation system or loop shall conform to the requirements of Section 40 91 00 – PROCESS CONTROL AND INSTRUMENTATION SYSTEMS.

1.04 MANUFACTURER'S REPRESENTATIVE SERVICES

A. General**:** Manufacturers representative services shall conform to the requirements of Section 40 91 00 – PROCESS CONTROL AND INSTRUMENTATION SYSTEMS.

1.05 PRODUCT HANDLING

A. General**:** Product handling shall conform to the requirements of Section 40 91 00 – PROCESS CONTROL AND INSTRUMENTATION SYSTEMS.

1.06 GUARANTEE

A. General**:** Guarantees shall conform to the requirements of Section 40 91 00 – PROCESS CONTROL AND INSTRUMENTATION SYSTEMS.

PART 2 — PRODUCTS

2.01 NON-CONTACT SONIC LEVEL MEASUREMENT

A. Where non-contact sonic types are indicated (excluding radar), sonic level measuring systems shall consist of an electronic controller-transmitter, a non-contact sonic transducer, and interconnecting cables. The controller-transmitter shall generate the sonic signal to drive the transducer, detect the return echo and convert the elapsed time to a level. The controller-transmitter shall have the following features: solid state design, integral level indicator, process temperature compensation, (2) dry- relay

contacts (to be configured as shown on the Contract Drawings), (1) programmable alarm contact, 4-20 mA output signal linearly proportional to level or OCM flow and HART protocal compatibility. Input power shall be 120 VAC 60 Hz or 24Vdc. The transmitter shall be housed in a Nema 4X IP65 rated enclosure constructed of corrosion resistant material suitable for use in a Class 1 Division 1 hazardous area. The sonic transducer shall be housed in a submersible NEMA 6 enclosure constructed of corrosion resistant materials suitable for use in a Class I Division I hazardous area.

B. Sonic level measuring systems shall be as manufactured by:
   1. Endress & Hauser Prosonic FMU 90 Series transmitter with FDU9x Series transducer
   2. Siemens Hydro Ranger Plus Model
   3. Or approved equal.

C. Where indicated on the contract drawings, sufficient cable shall be furnished to support remote mounting of the transmitter and manufacturer recommended pipe nozzle (to suit sensor model) shall be furnished and installed. For storage tank applications, furnish probe with 316 SS ANSI Class 150 flange with 1-inch NPT bore. Contractor shall furnish sufficient sensor cable to allow for remote mount of indicating transmitter at ground level (approximately 5 feet above grade) for all tank level measurement applications. Refer to Appendix A of Section 40 91 00 – PROCESS CONTROL AND INSTRUMENTATION SYSTEMS for the complete instrument schedule.

2.02 SUBMERSIBLE TRANSDUCER TYPE LEVEL MEASUREMENT

A. Where submersible transducer type is indicated, the level measurement system shall consist of a submersible transducer, electronic transmitter, support cable, and interconnecting cable with cable shield and vent tube for atmospheric reference. The vent tube shall be provided with a replaceable moisture barrier. The submersible transducer shall be the strain gauge type suitable for sensing pressure equivalent to the liquid level range indicated. The transducer shall have 316 stainless steel process wetted parts and shall be furnished with a waterproof interconnecting cable. Cable airline shall have diaphragm seal. The transducer shall be suspended by a corrosion resistant cable as recommended by the manufacturer. The installation shall allow easy removal of the transducer and cable assembly for maintenance purposes. The electronic level transmitter shall be remote mounted and shall produce a 4-20 mA DC signal linearly proportional to the level range indicated. The unit shall be complete with weatherproof enclosure, zero and span adjustments and the measurement system shall be suitable for operation over a temperature range of 32 to 122 degrees Fahrenheit with an accuracy of plus or minus 0.5 percent of span. The unit shall support the HART protocol.

B. Submersible level transducers and transmitters shall be as manufactured by:
   1. Endress & Hauser, Deltapilot S DB52 Series
   2. Rosemount 9700 Series
   3. Or approved equal.

C. For tank applications, furnish probe with 316 SS ANSI Class 150 flange with 1-inch NPT bore, water-tight seal and cable grip. Contractor shall furnish sufficient sensor cable to allow for remote mount of indicating transmitter as shown on the contract

drawings. Refer to Appendix A of Section 40 91 00 – PROCESS CONTROL AND INSTRUMENTATION SYSTEMS for the complete instrument schedule.

2.03 NON-CONTACT RADAR LEVEL MEASUREMENT

A. Where non-contact radar types are indicated (excluding sonic), time-of-flight radar level measuring systems shall consist of an electronic controller-transmitter, a non-contact signal rod-antenna, interconnecting cables and remote level indicator (as shown on the contract drawings). The controller-transmitter shall generate the radar impulse, detect the return echo and convert the elapsed time to a level or volume. The measurement shall not be affected by changing media, temperature changes, gas blankets or steam. The transmitter shall include functions to suppress interference echoes that may be produced by edges or weld seams and shall support K-band and/or C-band frequencies. The antenna performance shall not be affected by condensation build-up. The controller-transmitter shall have the following features: solid state design, integral level indicator (where indicated on the contract drawings), 2-wire loop power, 4-20 mA output signal linearly proportional to the calculated level or volume and HART protocol compatibility. Measuring error shall be no greater than 0.1% of measuring range with a resolution of 0.03% of measuring range. Upon detection of sensor failure the transmitter shall be configured to immediately reduce output to 3.8mA. The radar level measurement assembly, including transmitter, antenna and antenna horn, shall be constructed of corrosion resistant material suitable for use in a Class 1 Division 1 hazardous area and installed in an intrinsically safe manner.

B. Radar level measuring systems shall be as manufactured by:
   1. Endress & Hauser Micropilot M FMR2XX Series with FHX 40 Nema 4X remote display.
   2. Rosemount 5400 Series with Nema 4X remote display
   3. Or approved equal.

C. Instrument shall be furnished with manufacturer recommended 316L SS mounting bracket. Note: where used to measure level of an aerated surface, the transmitter shall include the advanced dynamics option (or Rosemount equivalent) to ensure measurement accuracy and repeatability within manufacturer published specification. Refer to Appendix A of Section 40 91 00 for the complete instrument schedule.

2.04 MAGNETIC LEVEL SIGHT GAUGE

A. Magnetic level sight gauge shall be furnished and installed by the tank Manufacturer and sized to accommodate the full operating range of the tank. The gauge body shall be constructed of electro-polished 316 stainless steel or hastelloy with titanium float. The gauge shall be furnished with one low-level limit switch, one high-level limit switch, measuring scale, red polycarbonate flags, 2-inch flanges (ANSI Class 150), block and drain valves and 316 stainless steel mounting brackets. The Contractor shall ensure wetted and exposed materials are chemically inert to the specific process and suitable for continuous exposure to direct sunlight.

B. Magnetic sight gauge shall be as manufactured by:
   1. Barksdale Model LSSM

2. Gems SureSite
3. Or approved equal.

C. Site gauge shall be installed per Manufacturer requirements.

PART 3 — EXECUTION

3.01 GENERAL

A. Electrical interface and code compliance shall conform to the requirements of Section 40 91 00 – PROCESS CONTROL AND INSTRUMENTATION SYSTEMS.

3.02 CALIBRATION

A. The calibration of all devices shall conform to the requirements of Section 40 91 00 – PROCESS CONTROL AND INSTRUMENTATION SYSTEMS.

3.03 INSTALLATION

A. The installation of all devices shall conform to the requirements of Section 40 91 00 – PROCESS CONTROL AND INSTRUMENTATION SYSTEMS.

3.04 LOOP TESTING

A. The loop testing of all devices shall conform to the requirements of Section 40 91 00 – PROCESS CONTROL AND INSTRUMENTATION SYSTEMS.

3.05 PRECOMMISSIONING

A. The precommissioning of all devices shall conform to the requirements of Section 40 91 00 – PROCESS CONTROL AND INSTRUMENTATION SYSTEMS.

3.06 ON-SITE SUPERVISION

A. The on-site supervision of all devices shall conform to the requirements of Section 40 91 00 – PROCESS CONTROL AND INSTRUMENTATION SYSTEMS.

3.07 PERFORMANCE TESTING

A. The performance testing of all devices shall conform to the requirements of Section 40 91 00 – PROCESS CONTROL AND INSTRUMENTATION SYSTEMS.

3.08 RECORD DRAWINGS

A. Record Drawings shall conform to the requirements of Section 40 91 00 – PROCESS CONTROL AND INSTRUMENTATION SYSTEMS.

3.09 TRAINING

A. Training for all equipment and software shall conform to the requirements of Section 40 91 00 – PROCESS CONTROL AND INSTRUMENTATION SYSTEMS.

3.10 ACCEPTANCE

A. All acceptance testing shall conform to the requirements of Section 40 91 00 – PROCESS CONTROL AND INSTRUMENTATION SYSTEMS.

END OF SECTION

THIS PAGE INTENTIONALLY LEFT BLANK

SECTION 40 91 07

LEVEL DETECTION SWITCHES

PART 1 – GENERAL

1.01 THE REQUIREMENT

A. General: The Contractor shall provide level detection switches, complete and operable, in accordance with the Contract Documents.

B. The requirements of Section 40 91 00 - PROCESS CONTROL AND INSTRUMENTATION SYSTEMS apply to this Section.

1.02 Contractor SUBMITTALS

A. The Contractor shall furnish submittals in accordance with Section 40 91 00.

1.03 QUALITY ASSURANCE

A. General: The accuracy of each instrumentation system or loop shall conform to the requirements of Section 40 91 00 – PROCESS CONTROL AND INSTRUMENTATION SYSTEMS.

1.04 MANUFACTURER'S REPRESENTATIVE SERVICES

A. General: Manufacturers representative services shall conform to the requirements of Section 40 91 00 – PROCESS CONTROL AND INSTRUMENTATION SYSTEMS.

1.05 PRODUCT HANDLING

A. General: Product handling shall conform to the requirements of Section 40 91 00 – PROCESS CONTROL AND INSTRUMENTATION SYSTEMS.

1.06 GUARANTEE

A. General: Guarantees shall conform to the requirements of Section 40 91 00 – PROCESS CONTROL AND INSTRUMENTATION SYSTEMS.

PART 2 – PRODUCTS

2.01 FLOAT TYPE LIQUID LEVEL SWITCHES

A. Liquid level (mercury-free) switches shall be the side mounted float actuated type. Float switches shall be SPDT and shall consist of a fixed sealed reed switch actuated by a floating magnet. Level switches shall be flange or plug mounted to suit field requirements. Process wetted materials shall be Teflon.

B. Liquid level switches shall be as manufactured by MAGNETROL “TUFFY” or approved equal. Refer to Appendix A of Section 40 91 00 – PROCESS CONTROL AND INSTRUMENTATION SYSTEMS for the complete instrument schedule.

2.02 TIPPING FLOAT LEVEL SWITCHES

A. Tipping float (mercury-free) level switches shall consist of a switch, a moving float, and a connecting cable which is anchored at the midpoint of a differential band. As the level rises and falls the float rights itself or inverts causing switching actions. The cable anchoring point shall be protected by strain relief. The hermetically sealed switches shall be SPDT with a minimum rating of 10 Amps at 120 VAC. Process wetted materials shall be Teflon.

B. Tipping float level switches shall be as manufactured by MAGNETROL T10 or approved equal. Refer to Appendix A of Section 40 91 00 for the complete instrument schedule.

2.03 SUSPENSION CABLE TYPE LEVEL SWITCHES

A. Level switches (mercury-free) shall be equipped with SPDT switches actuated by Karbate displacers. Each of the two switches on the tandem unit shall be independently actuated by adjusting each of the fixed narrow level displacers along the suspension cable. Displacer suspension cable shall be constructed of 316 stainless steel. The switch shall have a 3-inch, 150-lb mounting flange.

B. Suspension cable type level switches shall be as manufactured by MAGNETROL T10 or approved equal. Refer to Appendix A of Section 40 91 00 – PROCESS CONTROL AND INSTRUMENTATION SYSTEMS for the complete instrument schedule.

2.04 VIBRONIC LEVEL SWITCHES

A. The level switch shall operate on the frequency shift tuning fork principle using a two-tine fork assembly and a bi-morph piezoelectric system. The presence of a liquid or slurry shall shift the resonant frequency of the fork assembly below a fixed set point triggering a state change in the switch output. The switch shall introduce no electrical energy into the process being measured. The fork assembly shall be 1.5 inches in length, mounted on an extension from 6 to 115 inches in length, and shall be capable of being mounted vertically or horizontally. The level switch shall be of an integral field mountable self-contained design and shall not have any calibration controls or calibration requirements. Switch point accuracy shall be within 0.004-inches. Gas bubbles, foam, dielectric changes, conductivity changes shall not compromise the ability of the level switch to reliably indicate liquid and slurry levels. The switch shall reliably indicate liquid and slurry levels with viscosity's ranging from 0 to 10000cP and density variations from 0.5 to 1.7 SGU. The switch shall reliably operate with hard build-up equivalent to 0.15 inches of calcium carbonate.

B. All wetted parts, including the fork assembly and extension shall be constructed of 316L SS and mounted into the process via a one inch NPT threaded boss. The switch shall provide continuous self-monitoring of its sensing components and

indicate when a failure or fork corrosion has been detected (where indicated on the drawings). The switch shall operate with process temperatures ranging from -40 to 300 degrees F and pressures ranging from vacuum to 930 psi. The switch shall have a NEMA 4X dual-compartment housing rated for Class I Division II installation where indicated. The electronics housing shall be epoxy coated aluminum. Cable entries will be through NPT conduit fittings.

C. The level switch shall have all electronics in the form of module inserts that can be field installed or interchanged without effect on switch performance or need to recalibrate, and without removing the sensor from the process. Electronics will have an LED indicating switch state, as well as a power LED indicator. An on-board toggle switch will allow field selection of max or min detection. A pressure tight feed-through from the sensor to the electronics housing will be available to provide a 2nd line of defense in the case of sensor damage.

D. The level switch shall be as manufactured by
   1. Endress+Hauser Liquiphant M FTL 50 Series
   2. Or approved equal.

E. Refer to Appendix A of Section 40 91 00 – PROCESS CONTROL AND INSTRUMENTATION SYSTEMS for the complete instrument schedule.

PART 3 – EXECUTION

3.01 GENERAL

A. Electrical interface and code compliance shall conform to the requirements of Section 40 91 00 – PROCESS CONTROL AND INSTRUMENTATION SYSTEMS.

3.02 CALIBRATION

A. The calibration of all devices shall conform to the requirements of Section 40 91 00 – PROCESS CONTROL AND INSTRUMENTATION SYSTEMS.

3.03 INSTALLATION

A. The installation of all devices shall conform to the requirements of Section 40 91 00 – PROCESS CONTROL AND INSTRUMENTATION SYSTEMS.

3.04 LOOP TESTING

A. The loop testing of all devices shall conform to the requirements of Section 40 91 00 – PROCESS CONTROL AND INSTRUMENTATION SYSTEMS.

3.05 PRECOMMISSIONING

A. The pre-commissioning of all devices shall conform to the requirements of Section 40 91 00 – PROCESS CONTROL AND INSTRUMENTATION SYSTEMS.

3.06 ON-SITE SUPERVISION

A. The on-site supervision of all devices shall conform to the requirements of Section 40 91 00 – PROCESS CONTROL AND INSTRUMENTATION SYSTEMS.

3.07 PERFORMANCE TESTING

A. The performance testing of all devices shall conform to the requirements of Section 40 91 00 – PROCESS CONTROL AND INSTRUMENTATION SYSTEMS.

3.08 RECORD DRAWINGS

A. Record Drawings shall conform to the requirements of Section 40 91 00 – PROCESS CONTROL AND INSTRUMENTATION SYSTEMS.

3.09 TRAINING

A. Training for all equipment and software shall conform to the requirements of Section 40 91 00 – PROCESS CONTROL AND INSTRUMENTATION SYSTEMS.

3.10 ACCEPTANCE

A. All acceptance testing shall conform to the requirements of Section 40 91 00 – PROCESS CONTROL AND INSTRUMENTATION SYSTEMS.

END OF SECTION

SECTION 40 91 08
PRESSURE MEASURING DEVICES

PART 1 – GENERAL

1.01 THE REQUIREMENT

A. General**:** The Contractor shall furnish and install all pressure measuring systems, complete and operable, in accordance with the Contract Documents.

B. The requirements of Section 40 91 00 – PROCESS CONTROLS AND INSTRUMENTATION SYSTEMS apply to this Section.

1.02 Contractor SUBMITTALS

A. General: In addition to the Shop Drawing requirements of Section 40 91 00 – PROCESS CONTROLS AND INSTRUMENTATION SYSTEMS., the Contractor shall furnish submittals in accordance with Section 40 91 00 – PROCESS CONTROLS AND INSTRUMENTATION SYSTEMS.

1.03 QUALITY ASSURANCE

A. General: The accuracy of each instrumentation system or loop shall conform to the requirements of Section 40 91 00 – PROCESS CONTROLS AND INSTRUMENTATION SYSTEMS.

1.04 MANUFACTURER'S REPRESENTATIVE SERVICES

A. General: Manufacturers representative services shall conform to the requirements of Section 40 91 00 – PROCESS CONTROLS AND INSTRUMENTATION SYSTEMS.

1.05 PRODUCT HANDLING

A. General: Product handling shall conform to the requirements of Section 40 91 00 – PROCESS CONTROLS AND INSTRUMENTATION SYSTEMS.

1.06 GUARANTEE

A. General: Guarantees shall conform to the requirements of Section 40 91 00 – PROCESS CONTROLS AND INSTRUMENTATION SYSTEMS.

PART 2 – PRODUCTS

2.01 PRESSURE GAUGES

A. Pressure gauges shall be 4-1/2 inches in diameter, liquid-filled, bottom connected,

with white laminated dials and black graduations. Windows shall be shatterproof glass. Gauges shall have a blowout disc and be encased in phenolic, steel or cast iron. Measuring element shall be a stainless steel bourdon tube with welded, stress-relieved joints. Socket shall have wrench flats. Movement shall be rotary geared, all stainless steel material. All pressure gauges shall be provided with a pulsation snubber constructed of 316 stainless steel and a ball isolation valve. Accuracy shall be plus or minus 0.5 percent range to 150 percent of the working pressure or vacuum of the pipe or vessel to which they are connected.

B. Pressure gauges shall be as manufactured by:
   1. Ashcroft 1279
   2. Ametek Solfrunt Series 1900
   3. Or approved equal.

C. Unless noted otherwise, all pressure gauges represented on the P&ID contract drawings are to be provided by the Contractor. Refer to Appendix A of Section 40 91 00 – PROCESS CONTROLS AND INSTRUMENTATION SYSTEMS for the complete instrument schedule.

2.02 ELECTRONIC DIFFERENTIAL PRESSURE TRANSMITTERS

A. Components**:** Electronic differential transmitters shall be of the differential pressure type and consist of a capsule assembly, bottom works, weather-proof and bug-proof atmospheric vent plug assembly, drain plug, cover flange, process connector and connection, teflon gaskets, amplifier unit, integral indicator, terminal box with cover, block and bleed valves, and conduit connections. Electronic differential transmitters shall be housed in a NEMA 4X enclosure. Flow Indicating Transmitters (FIT) shall be provided with three valve stainless steel manifolds. Level Indicating Transmitters (LIT) and Pressure Indicating Transmitters (PIT) shall be provided with two valve stainless steel manifolds.

B. Operating Principles: Pressure applied to the transmitter shall be transmitted by a sealed fill fluid to both sides of a sensing diaphragm. The sensing diaphragm and the sensor body shall function respectively as the moving and fixed electrodes of a differential capacitor. As the applied pressure causes the diaphragm to move, the capacitance of the cell shall change.

C. Performance Requirements
   1. The transmitter enclosure (top-works) shall be rotatable to facilitate access to the electronics with an over-rotation stop to prevent damage to sensor wires.
   2. The amplifier unit shall convert the change in capacitance to a 4-20mA DC signal, 2-wire type, with an allowable loop load of no less than 575 ohms.
   3. Transmitter design shall incorporate voltage surge and RFI protection.
   4. Static pressure rating shall be a minimum of 500 psig. The maximum overrange pressure limit shall be a minimum of 150 percent of the maximum range.
   5. Span shall be adjustable over a minimum of a 7:1 range. External

adjustments shall include zero and span.

6. Output signal damping shall be provided as an internal adjustment. Square root extraction circuitry, as will be required for venturi flow measurement applications, shall be provided as an option which can be added or removed from the transmitter.
7. All equipment shall be suitable for an ambient operating range of minus 40 degrees F to plus 212 degrees F.
8. All block and bleed valves shall be constructed of 316 stainless steel. Bolts for process covers and process connectors shall be of the same material as that specified for the process covers.
9. The top-works shall be constructed of low copper die-cast aluminum and finished with epoxy paint.
10. The integral indicator shall have a linear scale and be calibrated in process units. Power supply shall be 24 VDC.
11. Accuracy, including linearity and repeatability, shall be a plus or minus 0.2 percent of span. Hysteresis shall be limited to 0.05 percent of span. Drift, over a six month period shall not exceed 0.1 percent of reference span. Ambient temperature effect shall be limited to no more than plus or minus 0.5 percent of maximum span per 100° F.
12. Transmitter is to utilize “Smart” technology which employs a hand-held configuration terminal and complies with HART protocol.

D. Materials: All wetted parts including block and bleed valves parts shall be constructed of 316 stainless steel.

E. Manufacturers:
1. Rosemount Model 3051C, 3051CD or 3051L
2. Endress & Hauser Deltabar S PMD/FMD-75 series
3. Or approved equal.

F. Refer to Appendix A of Section 40 91 00 – PROCESS CONTROLS AND INSTRUMENTATION SYSTEMS for the complete instrument schedule.

2.03 DIAPHRAGM SEALS FOR PRESSURE MEASURING SYSTEMS

A. Components: Diaphragm seals shall consist of bottom housing, lower ring, diaphragm capsule, fill screw, flushing connection and a top housing.

B. Operating Principles: The diaphragm seal shall attach to the inlet connection of a pressure instrument to isolate its measuring element from the process fluid. The space between the diaphragm and the pressure element shall be completely filled with a suitable liquid. Displacement of the liquid fill in the pressure element through the movement of the diaphragm shall transmit process pressure changes directly to a gauge, transmitter, switch or other pressure instrument. The diaphragm seal shall have a removable bottom housing to permit the servicing and refilling.

C. Materials: All exposed surfaces, housings, and diaphragm shall be constructed of

316 stainless steel.

D. Pressure diaphragm seals shall be Ashcroft 101 or approved equal.

PART 3 – EXECUTION

3.01 GENERAL

A. Electrical interface and code compliance shall conform to the requirements of Section 40 91 00 – PROCESS CONTROLS AND INSTRUMENTATION SYSTEMS.

3.02 CALIBRATION

A. The calibration of all devices shall conform to the requirements of Section 40 91 00 – PROCESS CONTROLS AND INSTRUMENTATION SYSTEMS.

3.03 INSTALLATION

A. The installation of all devices shall conform to the requirements of Section 40 91 00 – PROCESS CONTROLS AND INSTRUMENTATION SYSTEMS.

3.04 LOOP TESTING

A. The loop testing of all devices shall conform to the requirements of Section 40 91 00 – PROCESS CONTROLS AND INSTRUMENTATION SYSTEMS.

3.05 PRECOMMISSIONING

A. The pre-commissioning of all devices shall conform to the requirements of Section 40 91 00 – PROCESS CONTROLS AND INSTRUMENTATION SYSTEMS.

3.06 ON-SITE SUPERVISION

A. The on-site supervision of all devices shall conform to the requirements of Section 40 91 00 – PROCESS CONTROLS AND INSTRUMENTATION SYSTEMS.

3.07 PERFORMANCE TESTING

A. The performance testing of all devices shall conform to the requirements of Section 40 91 00 – PROCESS CONTROLS AND INSTRUMENTATION SYSTEMS.

3.08 RECORD DRAWINGS

A. Record Drawings shall conform to the requirements of Section 40 91 00 – PROCESS CONTROLS AND INSTRUMENTATION SYSTEMS.

3.09 TRAINING

A. Training for all equipment and software shall conform to the requirements of Section 40 91 00 – PROCESS CONTROLS AND INSTRUMENTATION SYSTEMS.

3.10 ACCEPTANCE

A. All acceptance testing shall conform to the requirements of Section 40 91 00 – PROCESS CONTROLS AND INSTRUMENTATION SYSTEMS.

END OF SECTION

THIS PAGE INTENTIONALLY LEFT BLANK

SECTION 40 91 09
PRESSURE DETECTION SWITCHES

PART 1 – GENERAL

1.01 THE REQUIREMENT

A. General: The CONTRACTOR shall furnish and install all pressure detection systems, complete and operable, in accordance with the Contract Documents.

B. The requirements of Section 40 91 00 – PROCESS CONTROLS AND INSTRUMENTATION SYSTEMS apply to this Section.

1.02 CONTRACTOR SUBMITTALS

A. General: The CONTRACTOR shall furnish submittals in accordance with Section 40 91 00 – PROCESS CONTROLS AND INSTRUMENTATION SYSTEMS.

1.03 QUALITY ASSURANCE

A. General: The accuracy of each instrumentation system or loop shall conform to the requirements of Section 40 91 00 – PROCESS CONTROLS AND INSTRUMENTATION SYSTEMS.

1.04 MANUFACTURER'S REPRESENTATIVE SERVICES

A. General: Manufacturers representative services shall conform to the requirements of Section 40 91 00 – PROCESS CONTROLS AND INSTRUMENTATION SYSTEMS.

1.05 PRODUCT HANDLING

A. General: Product handling shall conform to the requirements of Section 40 91 00 – PROCESS CONTROLS AND INSTRUMENTATION SYSTEMS.

1.06 GUARANTEE

A. General: Guarantees shall conform to the requirements of Section 40 91 00 – PROCESS CONTROLS AND INSTRUMENTATION SYSTEMS.

PART 2 – PRODUCTS

2.01 DIFFERENTIAL PRESSURE SWITCH

A. Differential pressures switches shall be diaphragm-actuated with two independently adjustable SPDT snap action switches (mercury switches shall not be accepted). Contacts shall be rated for a minimum of 5 Amps at 120 VAC. The dead band shall be adjustable up to 60 percent of full scale. Set points shall fall between 20 and 80 percent of the adjustable range. The diaphragm shall be Buna-N, unless otherwise indicated, with a 1/4-inch brass or 316 stainless steel bottom sensing connection, unless otherwise indicated.

B. Differential pressure switches shall be as manufactured by Ashcroft, Series P for Nema 7/9 applications and Series G for Nema 4X applications or approved equal. Unless noted otherwise, pressure switches represented on the contract drawings are to be provided by the CONTRACTOR. Refer to Appendix A of Section 40 91 00 – PROCESS CONTROLS AND INSTRUMENTATION SYSTEMS for the complete instrument schedule.

2.02 ADJUSTABLE PRESSURE SWITCH

A. Unit shall be operated by a diaphragm and plunger actuating a snap switch (mercury switches shall not be accepted). Pressure switch shall have dual adjustments with two SPDT contacts rated for a minimum of 5 Amps at 120VAC. The dead band shall be adjustable up to 100 percent of full scale. Set points shall fall between 20 and 80 percent of the adjustable range. The diaphragm shall be Buna-N, unless otherwise indicated, and the lower housing shall be 316 stainless steel with a ¼-inch bottom sensing connection, unless otherwise indicated.

B. Adjustable pressure switches shall be as manufactured by Ashcroft, Series P for Nema 7/9 applications and Series G for Nema 4X applications or approved equal. Unless noted otherwise, pressure switches represented on the contract drawings are to be provided by the CONTRACTOR. Refer to Appendix A of Section 40 91 00 – PROCESS CONTROLS AND INSTRUMENTATION SYSTEMS for the complete instrument schedule.

2.03 DIAPHRAGM SEALS FOR PRESSURE MEASURING SYSTEMS

A. (See Section 40 91 08 - PRESSURE MEASURING DEVICE, Paragraph 2.3 for diaphragm seals)

PART 3 – **EXECUTION**

3.01 GENERAL

A. Electrical interface and code compliance shall conform to the requirements of Section 40 91 00 – PROCESS CONTROLS AND INSTRUMENTATION SYSTEMS.

3.02 CALIBRATION

A. The calibration of all devices shall conform to the requirements of Section 40 91 00 – PROCESS CONTROLS AND INSTRUMENTATION SYSTEMS.

3.03 INSTALLATION

A. The installation of all devices shall conform to the requirements of Section 40 91 00 – PROCESS CONTROLS AND INSTRUMENTATION SYSTEMS.

3.04 LOOP TESTING

A. The loop testing of all devices shall conform to the requirements of Section 40 91 00 – PROCESS CONTROLS AND INSTRUMENTATION SYSTEMS.

3.05 PRECOMMISSIONING

A. The pre-commissioning of all devices shall conform to the requirements of Section 40 91 00 – PROCESS CONTROLS AND INSTRUMENTATION SYSTEMS.

3.06 ON-SITE SUPERVISION

A. The on-site supervision of all devices shall conform to the requirements of Section 40 91 00 – PROCESS CONTROLS AND INSTRUMENTATION SYSTEMS.

3.07 PERFORMANCE TESTING

A. The performance testing of all devices shall conform to the requirements of Section 40 91 00 – PROCESS CONTROLS AND INSTRUMENTATION SYSTEMS.

3.08 RECORD DRAWINGS

A. Record Drawings shall conform to the requirements of Section 40 91 00 – PROCESS CONTROLS AND INSTRUMENTATION SYSTEMS.

3.09 TRAINING

A. Training for all equipment and software shall conform to the requirements of Section 40 91 00 – PROCESS CONTROLS AND INSTRUMENTATION SYSTEMS.

3.10 ACCEPTANCE

A. All acceptance testing shall conform to the requirements of Section 40 91 00 – PROCESS CONTROLS AND INSTRUMENTATION SYSTEMS.

END OF SECTION

THIS PAGE INTENTIONALLY LEFT BLANK

SECTION 40 91 10

TEMPERATURE MEASURING

PART 1 - GENERAL

1.01 THE REQUIREMENT

A. General: The Contractor shall furnish and install all in-line liquid flow detection systems, complete and operable, in accordance with the Contract Documents.

B. The requirements of Section 40 91 00 – PROCESS CONTROLS AND INSTRUMENTATION SYSTEMS apply to this Section.

1.02 CONTRACTOR SUBMITTALS

A. General: In addition to the Shop Drawing requirements of Section 40 91 00 – PROCESS CONTROLS AND INSTRUMENTATION SYSTEMS, the Contractor shall furnish submittals in accordance with Section 40 91 00 – PROCESS CONTROLS AND INSTRUMENTATION SYSTEMS.

1.03 QUALITY ASSURANCE

A. General: The accuracy of each instrumentation system or loop shall conform to the requirements of Section 40 91 00 – PROCESS CONTROLS AND INSTRUMENTATION SYSTEMS.

1.04 MANUFACTURER'S REPRESENTATIVE SERVICES

A. General: Manufacturers representative services shall conform to the requirements of Section 40 91 00 – PROCESS CONTROLS AND INSTRUMENTATION SYSTEMS.

1.05 PRODUCT HANDLING

A. General: Product handling shall conform to the requirements of Section 40 91 00 – PROCESS CONTROLS AND INSTRUMENTATION SYSTEMS.

1.06 GUARANTEE

A. General: Guarantees shall conform to the requirements of Section 40 91 00 – PROCESS CONTROLS AND INSTRUMENTATION SYSTEMS.

PART 2 - PRODUCTS

2.01 TEMPERATURE TRANSMITTER

A. Manufacturers: Temperature transmitter manufacturer shall be Rosemount model 3144P, Foxboro RTT Series, Yokogawa, or approved equal.

B. Performance / Design Criteria:
   1. Temperature transmitters shall be a single and a dual point type that shall measure the process temperature using a variety of universal sensor inputs such as RTD, thermocouple (T/C), mV, and ohms.
   2. Transmitter shall provide a 2-wire isolated 4-to-20 mA DC output signal at 24 VDC linear to the measured temperature... The signal shall be compatible with HART protocol. Transmitter accuracy shall be +/- 0.02 percent of span for T/C and +/- 0.001 percent of span for RTD.
   3. Transmitter shall have an integral digital LCD indicator scaled in linear engineering units.
   4. Ambient operating range of the transmitter shall be minus 40 degree F to plus 185 degrees F.

C. Materials / Components:
   1. Transmitter shall be connected directly to the sensor with a standard ½-inch NPT. Other connection styles shall be available and suitable for the installation requirements. Remote mounting transmitter shall also be available. Process wetted material shall be as recommended by the manufacturer for the intended service and installation application, and as indicated in the data sheet.
   2. Housing shall be dual compartment made of materials recommended by the manufacturer for the intended service and installation application and as indicated in the data sheet. As a minimum, housing shall be rated NEMA 4X, unless otherwise indicated in the data sheet. Explosion proof rated housing shall be available.
   3. Provide mounting hardware suitable for the installation application and style.

2.02 TEMPERATURE MEASURING SENSORS

A. Resistance Temperature Detectors (RTD) Type And Thermowell
   1. Manufacturers: Resistance temperature detector assemblies shall be Rosemount Series 68/78 RTD (Series 91 Thermowell), Foxboro PR Series, or approved equal.
   2. Performance / Design Criteria:
      a. The RTD shall be an industry standard Platinum-100, single element type sensor in a shield sheath. It shall be an insertion type and provided with a thermowell as an assembly from the same manufacturer. The RTD and the thermowell shall be compatible in size and connection.
      b. The RTD shall be able measure temperatures from -328 to 932 Degrees F, having a maximum time constant in agitated water of 5.0 seconds. the RTD shall comply with International Practical Temperature Scale (IPTS) 90 standards

3. Materials / Components:
   a. The RTD shall have a 3 or a 4-wire configuration as recommended by the manufacturer for the intended service and installation application and as indicated in the data sheet. The lead wires shall be PTFE insulated, silver plated, 22-gauge stranded copper wires. RTD extension wire shall be color-coded on the outside.
   b. The RTD shall be NEMA 4X in a 1/4-inch Type 316 stainless steel sheath with watertight potting.
   c. Thermowell
      1) The thermowell shall be provided to protect the RTD sensor installed in the process. The thermowell insertion length shall be as required by intended service and installation application, not exceeding the manufacturer's published recommendations for the allowable length and for the line velocity and as indicated in the data sheet.
      2) Standard thermowells shall be 316 stainless steel. For corrosive environments material shall be as recommended by the manufacturer for the intended service and installation application as indicated in the data sheet.
      3) Thermowell style and material shall be as required by the installation application and as recommended by the manufacturer as indicated in the data sheet. Process connections shall be threaded, flanged or welded, as required by the installation application and as indicated in the data sheet. Flanged thermowells, where required, shall meet material and size requirements of the line classification
   d. Connection Head: The temperature transmitter shall be connected to the RTD and thermowell assembly either directly or remotely. In remote mounting cases, the RTD/thermowell assembly shall be equipped with extension wires and a connection head. The extension wires shall be terminated in the connection head, which shall have a terminal block to accommodate single and dual sensors. The connection head shall be weatherproof. Explosion proof shall be available from the manufacturer.

B. Thermocouple Type Temperature Measuring Systems
   1. Manufacturers: Thermocouple assemblies shall be Rosemount Series 183 (Series 91 Thermowell), Foxboro MT Series MINOX, or approved equal.
   2. Performance / Design Criteria: Thermocouples shall be type J, K, E or T. The junction between the wires shall be fusion welded. The junctions shall be grounded with magnesium oxide insulation to improve response time. The thermocouple shall be encased in a 304 stainless steel sheath. Thermocouple complete assembly shall be from the same manufacturer and shall include thermowell, sealed sheath element, head with block, and nipple-union-nipple fittings.
   3. Materials / Components:
      a. Thermocouple extension wire shall be No. 16 AWG, solid conductor, twisted pairs, shielded, with flame resistant PTFE insulation and No. 20 AWG copper drain wire attached to shield. Thermocouple extension wire shall be color-coded on the outside.

b. Thermocouples shall be able to measure temperatures up to 1,600 Degrees F. The thermocouple sensor shall be NEMA 4X.

c. Connection Head: The temperature transmitter shall be connected to the thermocouple and thermowell assembly either directly or remotely. In remote mounting cases, the thermocouple/thermowell assembly shall be equipped with extension wires and a connection head. The extension wires shall be terminated in the connection head. The connection head shall be weather proof and explosion proof.

2.03 TEMPERATURE GAUGE

A. Manufacturers: Temperature gauges shall be by Ashcroft Series EI with thermowell, Weksler Type AF or AUW with thermowell, or approved equal.

B. Performance / Design Criteria:

1. Temperature gauges shall be bi-metallic thermometers and shall have a 5-inch dial with a single direct-reading scale and scale as indicated in the data sheet.
2. Accuracy shall be plus or minus 1 percent of range. Each thermometer shall be provided with an appropriate thermowell in accordance with manufacturer's recommendations.

C. Materials / Components:

1. The gauges shall be rust and corrosion-resistant with a leak-proof, hermetically sealed 316 stainless steel housing. The window shall be shatter proof glass. Process connection shall be as required by the installation application as indicated in the data sheet.
2. The sensing element shall be silicone dampened for vibration resistance. Stem length shall be the maximum standard size compatible with the piping or vessel but shall not exceed 9-inches. Dial shall be adjustable 360 degrees around the stem axis and can be tilled to 90 degrees from vertical to obtain the best viewing angle.

PART 3 - EXECUTION

3.01 GENERAL

A. Electrical interface and code compliance shall conform to the requirements of Section 40 91 00 – PROCESS CONTROLS AND INSTRUMENTATION SYSTEMS.

3.02 CALIBRATION

A. The calibration of all devices shall conform to the requirements of Section 40 91 00 – PROCESS CONTROLS AND INSTRUMENTATION SYSTEMS.

3.03 INSTALLATION

A. The installation of all devices shall conform to the requirements of Section 40 91 00 – PROCESS CONTROLS AND INSTRUMENTATION SYSTEMS.

3.04 LOOP TESTING

A. The loop testing of all devices shall conform to the requirements of Section 40 91 00 – PROCESS CONTROLS AND INSTRUMENTATION SYSTEMS.

3.05 PRECOMMISSIONING

A. The pre-commissioning of all devices shall conform to the requirements of Section 40 91 00 – PROCESS CONTROLS AND INSTRUMENTATION SYSTEMS.

3.06 ON-SITE SUPERVISION

A. The on-site supervision of all devices shall conform to the requirements of Section 40 91 00 – PROCESS CONTROLS AND INSTRUMENTATION SYSTEMS.

3.07 PERFORMANCE TESTING

A. The performance testing of all devices shall conform to the requirements of Section 40 91 00 – PROCESS CONTROLS AND INSTRUMENTATION SYSTEMS.

3.08 RECORD DRAWINGS

A. Record Drawings shall conform to the requirements of Section 40 91 00 – PROCESS CONTROLS AND INSTRUMENTATION SYSTEMS.

3.09 TRAINING

A. Training for all equipment and software shall conform to the requirements of Section 40 91 00 – PROCESS CONTROLS AND INSTRUMENTATION SYSTEMS.

3.10 ACCEPTANCE

A. All acceptance testing shall conform to the requirements of Section 40 91 00 – PROCESS CONTROLS AND INSTRUMENTATION SYSTEMS.

END OF SECTION

THIS PAGE INTENTIONALLY LEFT BLANK

SECTION 40 91 12

PROCESS ANALYZER MEASURING SYSTEMS

PART 1 -- GENERAL

1.01 THE REQUIREMENT

A. General: The Contractor shall furnish and install all process analyzer measuring systems, complete and operable, in accordance with the Contract Documents.

B. The requirements of Section 40 91 00 – PROCESS CONTROLS AND INSTRUMENTATION SYSTEMS apply to this Section.

1.02 CONTRACTOR SUBMITTALS

A. General: The Contractor shall furnish submittals in accordance with Section 40 91 00 – PROCESS CONTROLS AND INSTRUMENTATION SYSTEMS.

1.03 QUALITY ASSURANCE

A. General: The accuracy of each instrumentation system or loop shall conform to the requirements of Section 40 91 00 – PROCESS CONTROLS AND INSTRUMENTATION SYSTEMS.

1.04 MANUFACTURER'S REPRESENTATIVE SERVICES

A. General: Manufacturers representative services shall conform to the requirements of Section 40 91 00 – PROCESS CONTROLS AND INSTRUMENTATION SYSTEMS.

1.05 PRODUCT HANDLING

A. General: Product handling shall conform to the requirements of Section 40 91 00 – PROCESS CONTROLS AND INSTRUMENTATION SYSTEMS.

1.06 GUARANTEE

A. General: Guarantees shall conform to the requirements of Section 40 91 00 – PROCESS CONTROLS AND INSTRUMENTATION SYSTEMS.

PART 2 -- PRODUCTS

2.01 GENERAL

A. Signal Output: Analyzers shall be "smart" type and shall support remote configuration and calibration. Analyzers shall be interfaced to the plant control system using current regulated 4-20 mA HART protocol (driving 0 to 600 ohms). The Contractor shall perform a complete configuration check of each transmitter prior to site installation.

B. Power Input: Analog signal analyzers shall be fully isolated 2-wire type (i.e. loop-powered) where ever possible. However, if separate power is required for a given

device, 24VDC (delivered from the signal handling cabinet) will be the preferred installation approach. If neither type is available for a given application, the analyzer shall be fully isolated 4-wire type with power supply of 120 volts plus and minus 10 percent, 60 Hz plus and minus 5 percent.

C. Ambient Conditions: Analyzers shall be suitable for continuous automatic on-line analysis of the indicated parameter under the conditions indicated.
   1. Equipment shall operate satisfactorily in ambient temperatures between 0 degrees and plus 132 degrees F or shall be provided with isothermal enclosures so that accuracies will not exceed one percent of span.
   2. Process fluid temperatures will range between 32 and 120 degrees F unless indicated otherwise.

D. Sample Flow: Flow to non- inline analyzers (generally wet panel-mounted) shall be monitored by a thermal flow switch. Detected loss of flow shall result in generation of control system process alarm. Samples shall not pass through housings containing electronics unless specifically indicated otherwise.

E. Local Indication: Each analyzer shall be provided with local indicator scaled to match the indicated process units (refer to Section 40 91 00 APPENDIX A – INSTRUMENT LIST).

F. Calibration: HART transmitters shall be scaled and configured using the appropriate smart calibration device. Standard 4-20mA analyzers shall be fitted with calibration connections at the analyzer as required by the manufacturer.

G. Single manufacturer: All electrodes, fittings, and transmitters on analyzers measuring the same parameter shall be products of a single manufacturer.

2.02 LOW RANGE TURBIDITY MEASURING SYSTEMS

A. The turbidimeter shall be a microprocessor-based, continuous-reading, on-line nephelometric instrument meeting all design and performance criteria specified by method DIN EN ISO 7027 or USEPA approved Hach method 10258.

B. The turbidimeter shall consist of a Class 1 650 nm (EPA) or 850 nm (ISO) laser light source and 360° x 90° detection system with predictive diagnostics designed to continuously monitor turbidity in a sample stream.

C. The turbidimeter shall include an internal bubble trap to vent entrained air from the sample stream.

D. The turbidimeter shall offer the choice of formazin-based (20 or 1 NTU) or instrument comparison-based calibration methods.

A. Accuracy shall be ± 2% of reading or ± 0.01 NTU (whichever is greater) from 0 to 40 NTU, and ± 10% of reading from 41 to 100 NTU. Resolution shall be 0.0001 NTU and repeatability shall be better than ± 1.0% of reading or ±0.002 NTU (whichever is greater). User selectable signal averaging, bubble rejection, alarm and recorder output hold, and self-test diagnostics shall be provided.

B. Calibration shall be based on Formazin via comparison to a laboratory turbidimeter or with reflectance rods which are furnished as an accessory. The control unit shall be capable of offsetting the turbidity of pure water to read 0.0000 on particle free water. An auto-ranging digital display shall read from 0 to 100 NTU, and the output shall be capable of driving an 800 ohm load. The output shall be programmable over any portion of the output range, and self-test diagnostics shall be provided to indicate malfunctions. The control unit shall be provided in a wall mounted fiberglass enclosure which permits unobstructed viewing of all readouts. The turbidimeter shall have a 2 year Manufacturer's warranty.

C. Transmitter: The system shall be housed in a NEMA 4X enclosure suitable for wall, handrail or panel mounting. The system shall support a single or dual channel arrangement, 4-20 mA each, proportional to the measured variable. Operating ambient temperature range of 41°F to 104°F (at 10% to 90% humidity, non-condensing) shall be supported; however, system installation shall mitigate strong diurnal temperature fluctuations. The system transmitter shall include one limit dry contact per channel plus one general alarm dry contact. Integral LED display will indicate the measured value and operating keys and status LEDs will support secure user configuration. Transmitter and sensor shall be from the same manufacturer. Required power = 24VDC.

D. Turbidimeter shall be as manufactured by:
   1. Hach Model 1720E with sc200 controller and ICE-PIC Calibration/Verification module (52250-00)
   2. Hach Model TU5300sc with sc200 controller
   3. Or approved equal.

E. Refer to Appendix A of Section 40 91 00 for the complete instrument schedule.

2.03 PH/ORP ANALYZER

A. Transmitter
   1. The dual-input intelligent analyzer/transmitter shall consist of an amplifier, signal converter, and 4-20 mA signal transmitter for each input. It shall be microprocessor based, capable of the accurate determination of pH and ORP over the required ranges. Results shall be displayed on a large, high resolution dot-matrix display with large characters that continuously indicates the measured variable, along with temperature, output value and two programmable process parameters such as alarms or diagnostic variables. Process temperature may also be displayed in °C or °F. Continuous sensor glass and reference electrode diagnostics as well as diagnostics for operational errors or equipment problems shall be standard. Dual alarms with programmable logic shall be standard along with a third relay with alarm or timer functions and a fourth relay for sensor/analyzer and process fault alarms. Programmable direct or reverse acting isolated 4-20mA outputs, expandable over the analyzer’s range of measurement shall be standard. All functions including automatic buffer calibration, alarm and 4-20mA outputs, output dampening, and keyboard security (three levels) shall be accessible from the front panel membrane keyboard with tactile feedback. The analyzer smart transmitter shall be housed in a NEMA 4X (IP65) enclosure suitable for wall, handrail or panel mounting. The system shall support the HART protocol. Support ranges:

a. pH: 0 – 14 pH
   1) Error: +/-0.01pH
   2) Response Time: 5 seconds to 100% final reading
b. ORP: -1500 – 1500mV
   1) Error: +/-1mV
   2) Response Time: 5 seconds to 100% final reading

2. The analyzer smart transmitter shall be as manufactured by:
   a. HACH sc200 Universal Controller.
   b. Rosemount 1056 Transmitter
   c. Or approved equal**.**

B. pH Sensor
   1. The pH sensor shall be of the combination pH, reference electrode type housed in a molded polypropylene body with large area reference junction. The sensor shall have a 100 ohm RTD for automatic temperature compensation over the range of 0-100 °C up to 100 psig. Probes shall be submersion-type, flow-through or in-line configuration as indicated on the P&IDs with water-tight, quick release sensor-to-cable connector. Sensor manufacturer flow-through cell shall be furnished to support wet-panel installations; UV-resistant, water-tight 10m (nominal) sensor cable shall be furnished to support open-tank submersion applications. The pH sensor shall be as manufactured by:
      a. Hach pHD sc digital pH sensor
      b. Rosemount 3900 pH/ORP sensor
      c. Or approved equal.

C. ORP Sensor
   1. The ORP sensor shall be of the combination pH reference electrode type housed in a molded sealed, watertight tefzel body. The sensor shall be equipped with a triple junction reference. The sensor shall have an accuracy of ± 1.0 mV, repeatability of ± 1.0 mV, and a stability of ± 1.0 mV/month (non-cumulative). Probes shall be submersion-type, flow-through or in-line configuration as indicated on the P&IDs with water-tight, quick release sensor-to-cable connector. Sensor manufacturer flow-through cell shall be furnished to support wet-panel installations; UV-resistant, water-tight 10m (nominal) sensor cable shall be furnished to support open-tank submersion applications. The ORP sensor shall be as manufactured by:
      a. Hach pHD sc digital ORP
      b. Rosemount 3900 pH/ORP sensor
      c. Or approved equal.

D. General: Integral sensor preamplifier shall be supplied as required by manufacturer per installation requirement. Transmitter and probes shall be of the same manufacturer. Transmitter and sensor shall be from the same manufacturer. Refer to Section 40 91 00 Appendices for the complete instrument schedule.

2.04 COLORIMETRIC TOTAL CHLORINE RESIDUAL MEASURING SYSTEMS

A. Analysis System
   1. The analysis system shall measure total chlorine by a colorimetric N,N-diethyl-p-phenylenediamine (DPD) method. Following application-specific sample conditioning (i.e. forced flow through a membrane filter), reagent is added to a

sample ratio resulting in a characteristic color change. For each analyzer, reagents shall be provided for total chlorine analysis. An LED source is used to pass light through the sample at a wavelength correlated to total chlorine. The intensity of the light received by (or the absorbance detected by) the photometer is proportional to concentration of total chlorine. The analyzer serves to calculate concentration based on the proportion of light absorbed by the sample. The analysis system shall include automatic temperature and turbidity compensation. Assuming a minimum flow rate of 5 mL/min with conductivity greater than 50 µS/cm, the entire minimum permissible measuring period (including reaction time, rinse cycles, filling time, sampling time and reagent latency) shall be no longer than 10 min.

2. Precision: Maximum error shall be ± 2% of measuring range. Supported measuring ranges shall be from 0 to 5 ppm free or total chlorine.
3. Transmitter: The system shall be housed in a NEMA 4X enclosure suitable for wall, handrail or panel mounting. The system shall support a single or dual channel arrangement, 4-20 mA each, proportional to the measured variable. Operating ambient temperature range of 41°F to 104°F (at 10% to 90% humidity, non-condensing) shall be supported; however, system installation shall mitigate strong diurnal temperature fluctuations. The system transmitter shall include one limit dry contact per channel plus one general alarm dry contact. Integral LED display will indicate the measured value and operating keys and status LEDs will support secure user configuration. Required power = 24VDC.
4. The colorimetric chlorine residual analysis system shall be as manufactured by:
   a. Hach CL17 Chlorine Analyzer with total chlorine reagents with sc200 controller
   b. Or approved equal.

B. General: Analysis Systems shall be furnished complete with a one year supply of spare membrane assemblies, sensor electrolyte (as applicable), active/inactive reagents (as applicable), pre-conditioning filters and maintenance kit. Transmitter and sensor shall be of the same manufacturer. Refer to Section 40 91 00 APPENDICES for the complete instrument schedule.

2.05 CONDUCTIVITY ANALYZER

A. Sensor: The conductivity analyzer sensor shall consist of an insertion electrode type sensor constructed of 316 stainless steel or titanium with automatic temperature compensation and an integral shielded cable for connection to a field-mounted analyzer/transmitter. Cable length shall be as determined by the CONTRACTOR to suit the installation requirements as shown on the contract drawings. The sensor shall be suitable for conductivity measurement at pressures of up to 100 psig and temperature of up to 85°C in the process stream. The sensor accuracy shall be ±1.0 percent within a 0 - 1,000 mS/cm range and shall support air calibration for zero reference. The sensor shall be furnished complete with weatherproof junction box and Viton O-rings, suitable for NEMA 4X installation.

B. Range: Each conductivity sensor shall be selected with a cell constant appropriate to its required range, as shown in the instrument schedule in Section 40 91 00 Appendices For the conductivity analyzer in the CCRO permeate, the required range is 10 µS/cm to 1,000 µS/cm

C. Transmitter: The conductivity analyzer shall be microprocessor based with electrode sensor input. The unit shall be capable of full-scale reading between 0 to 1000 mS/cm. Interface shall be through membrane tactile keypad incorporating 3 levels of security access that is user programmable. A fault alarm shall be activated by auto diagnostics. Two 4 to 20-milliamp outputs shall be user definable as process or temperature outputs. They shall be rated at 650 ohms at 24 VDC. The system shall have temperature compensation curves for cation, ultrapure, specific and user definable curves. The transmitter shall output a 4-20mA signal linearly proportional to the conductivity measurement. Repeatability and accuracy shall be ±0.1 percent and ±0.5 percent, respectively, of calibrated range. The unit shall support the HART protocol. Upon detection of sensor failure, the transmitter shall be configured to immediately reduce output to 3.8mA.

D. Manufacturers: The conductivity analyzer transmitter shall be as manufactured by:
   1. GF Signet conductivity sensor with GF Signet 9900 or 9950 transmitter configured for inline or flow-through installation as applicable
   2. Rosemount 400 contacting conductivity sensor with Rosemount 1056 transmitter configured for inline or flow-through installation as applicable
   3. Or approved equal.

E. General: Probes shall be flow-through or in-line configuration as indicated on the P&IDs with water-tight, quick release sensor-to-cable connector. Sensor manufacturer flow-through cell shall be furnished to support wet-panel installations; UV-resistant, water-tight 15m (nominal) sensor cable shall be furnished to support In-line applications. Transmitter housing shall be rated Nema 4X suitable for wall, handrail or panel mounting. Transmitter and sensor shall be from the same manufacturer. Refer to Appendix A of Section 40 91 00 for the complete instrument schedule.

2.06 AMMONIA AND NITRATE

A. Ammonia Based Aeration Control System
   1. Optimization of the aeration systems at the Central Area Small Scale Facility is centered around real time control for nitrification through ammonia-based aeration control (ABAC). A Real Time Control system shall be provided that shall be network-connected to the plant's SCADA and perform the monitoring and control functionality as described in the Control Descriptions and contract P&IDs.
   2. Provide an Ammonia Based Aeration Control, consisting of the following:
      a. 15.6" touch screen industrial PC
      b. ABAC SOFTWARE
      c. OPC Server Software
      d. Wall-mount RTC Enclosure (NEMA 4X)
      e. Modbus/RTU connectivity (for connection to the plant's DCS)
      f. Cellular modem
   3. Manufacturer Services: Start-up and commissioning, including:
      a. Instrument configuration and programming
      b. Operator and Maintenance Training
      c. 12 weeks of remote monitoring, optimization, and weekly reporting.
      d. Set-up of real-time system alerts, such as operating outside of set points, flow issues, data missing, etc.

4. Provide manufacturer's 1-year Field Service Partnership support package consisting of:
   a. Continued remote system monitoring with unlimited priority Technical Support calls
   b. Monthly System Reports
   c. Free firmware updates
   d. Delay start for support during second year of operations. The first year of CASSF operation is intended for Conventional DO control without the ABAC system.
5. The ABAC system shall be as manufactured by:
   a. Hach Company,
   b. Xylem/YSI/Sanitaire OSCAR
   c. Or approved equal

B. Ammonia Gas Selective Electrode (GSE) Analysis System (for AWTP)
1. Ammonia Analysis: ammonia in the sample is converted to ammonia gas. Only the gaseous ammonia gas passes through the gas-permeable membrane of the GSE electrode and is detected. and measured with a GSE.
2. The analyzer shall be able to detect ammonia over a minimum range of 0.02 to 5 mg/L NH3-N, with an accuracy of +/-3%
3. The minimum frequency of measurements shall be at least once every 5 minutes.
4. The analyzer shall have a display showing the measured ammonia concentration
5. The analyzer enclosure shall meet a minimum rating of NEMA 4X.
6. Locations:
   a. Murray Train MF Feed (AE/AIT 1004)
   b. San Vicente Train RO Feed (AE/AIT 861)
7. The ammonia GSE analysis system shall be as manufactured by:
   a. HACH Amtax sc Ammonium analyzer with sc200 controller

   b. Or approved equal

C. Ammonia Gas Selective Electrode (GSE) Analysis System (for BNR Tank)
1. Ammonia Analysis: ammonia in the sample is converted to ammonia gas. Only the gaseous ammonia gas passes through the gas-permeable membrane of the GSE electrode and is detected and measured with a GSE.
2. The analyzer shall be able to detect ammonia over a minimum range of 0.02 to 5 mg/L NH3-N, with an accuracy of +/-3%
3. The minimum frequency of measurements shall be at least once every 5 minutes.
4. The analyzer shall have a display showing the measured ammonia concentration
5. The analyzer enclosure shall meet a minimum rating of NEMA 4X.
6. Locations:
   a. BNR Tank Aeration Zone 2
7. The ammonia GSE analysis system shall be as manufactured by:
   a. HACH Amtax sc Ammonium analyzer with sc200 controller
   b. Or approved equal
8. The sample shall have suspended solids removed using membrane modules and shall use peristaltic pumps (housed in a control unit) to deliver the filtered sample to the analyzer. The sample preparation instrument (filtration/pump) shall be manufactured by:
   a. Hach Filtrax (5739100)

b. Or approved equal

D. Ammonia Gas Selective Electrode (GSE) Analysis System (for Blending Tank)
1. Ammonia Analysis: ammonia in the sample is converted to ammonia gas. Only the gaseous ammonia gas passes through the gas-permeable membrane of the GSE electrode and is detected and measured with a GSE.
2. The analyzer shall be able to detect ammonia over a minimum range of 5.0 to 1,000 mg/L NH3-N, with an accuracy of +/-3%
3. The minimum frequency of measurements shall be at least once every 5 minutes.
4. The analyzer shall have a display showing the measured ammonia concentration
5. The analyzer enclosure shall meet a minimum rating of NEMA 4X.
6. Locations:
   a. Blending Tank
7. The ammonia GSE analysis system shall be as manufactured by:
   a. HACH Amtax sc Ammonium analyzer with sc200 controller
8. The sample shall have suspended solids removed using membrane modules and shall use peristaltic pumps (housed in a control unit) to deliver the filtered sample to the analyzer. The sample preparation instrument (filtration/pump) shall be manufactured by:
   a. Hach Filtrax (5739100)

   b. Or approved equal

E. Nitrate Analysis: Nitrate shall be measured by a potentiometric ion-selective probe. The probe shall be of stainless steel and plastic construction, and sufficiently robust for permanent installation for continuous inline monitoring. The probe shall include a 1-m integral shielded cable for connection to a field-mounted analyzer/transmitter. The sensor shall be suitable for nitrate measurement down to a lower detection limit of 0.2 mg/L NO3-N, over a pH range from 5 to 9. The sensor accuracy shall be ± 5.0 percent of the measured value, with a response time of less than 3 minutes. The probe shall be calibrated by installation of a manufacturer-provided cartridge. This cartridge shall be factory calibrated and designed for plug-and-play installation into the sensor. The sensor shall automatically correct the nitrate value for the presence of chloride ion using a dedicated integral chloride ISE for municipal wastewater applications.
1. Transmitter: The nitrate transmitter shall be microprocessor based with electrode sensor input. The unit shall be capable of full-scale reading for any of the ranges identified above. Interface shall be through membrane tactile keypad incorporating 3 levels of security access that is user programmable. A fault alarm shall be activated by auto diagnostics. Two 4-20 mA outputs shall be user definable as process or temperature outputs. They shall be rated at 650 ohms at 24 VDC. The transmitter shall output a 4-20 mA signal linearly proportional to the nitrate measurement. Repeatability and accuracy shall be ± 0.1% and ± 0.5%, respectively, of calibrated range. The unit shall support the HART protocol. Upon detection of sensor failure the transmitter shall be configured to immediately reduce output to 3.8 mA
2. Manufacturers: The ion-selective electrode system shall be as manufactured by
   a. HACH sc200 Universal Controller with N-ISE sc Probe with RFID technology Or approved equal.

F. Nitrate/Nitrite Analysis (for combined RO permeate): Nitrate and nitrite shall be measured by a probe employing a method based on absorption of UV light. The probe shall be of stainless steel and plastic construction, and sufficiently robust for permanent installation for continuous inline monitoring. The probe shall include a 1-m integral shielded cable for connection to a field-mounted analyzer/transmitter. The sensor shall be suitable for nitrate measurement in the range of 0.5 to 20 mg/L NO3-N.
   1. Transmitter: The system shall be housed in a NEMA 4X enclosure suitable for wall, handrail or panel mounting. The system shall support a single or dual channel arrangement, 4-20 mA each, proportional to the measured variable. Operating ambient temperature range of 41°F to 104°F (at 10% to 95% humidity, non-condensing) shall be supported; however, system installation shall mitigate strong diurnal temperature fluctuations. The system transmitter shall include one limit dry contact per channel plus one general alarm dry contact. Integral LED display will indicate the measured value and operating keys and status LEDs will support secure user configuration.
   2. Location: Combined Murray train RO permeate line to RO flush tank. Analyzer AE/AIT1076
   3. Manufacturers: The nitrate/nitrite analysis system shall be as manufactured by:
      a. HACH Nitratax probe with sc200 controller

      b. Or approved equal

G. Nitrate/Nitrite Analysis (for BNR Tank): Nitrate and nitrite shall be measured by a probe employing a method based on absorption of UV light. The probe shall be of stainless steel and plastic construction, and sufficiently robust for permanent installation for continuous inline monitoring. The probe shall include a 1-m integral shielded cable for connection to a field-mounted analyzer/transmitter. The sensor shall be suitable for nitrate measurement in the range of 0.5 to 20 mg/L NO3-N.
   1. Transmitter: The system shall be housed in a NEMA 4X enclosure suitable for wall, handrail or panel mounting. The system shall support a single or dual channel arrangement, 4-20 mA each, proportional to the measured variable. Operating ambient temperature range of 41°F to 104°F (at 10% to 95% humidity, non-condensing) shall be supported; however, system installation shall mitigate strong diurnal temperature fluctuations. The system transmitter shall include one limit dry contact per channel plus one general alarm dry contact. Integral LED display will indicate the measured value and operating keys and status LEDs will support secure user configuration.
   2. Locations:
      a. BNR Tank Anoxic zone 2

      b. BNR Tank Aeration zone 2

   3. Manufacturers: The nitrate/nitrite analysis system shall be as manufactured by:
      a. HACH Nitratax probe with sc200 controller

H. General: Analysis systems shall be furnished complete with a one year supply of spare membrane assemblies, sensor electrolyte (as applicable), active/inactive reagents (as applicable), pre-conditioning filters and maintenance kit. Refer to Section 40 91 00 Appendices for the complete instrument schedule.

2.07 UVT Analyzer

A. Sensor: the UV absorbance/transmittance sensor shall be able to detect UV light (at 254 nm wavelength) transmitted through the sample water and provide an analysis range of 10-100 percent transmittance, with an accuracy of +/-1%. The minimum frequency of measurements shall be at least once every 1 minute.

B. Transmitter: the transmitter shall have a digital display showing the measured UV percent transmittance in units of %transmittance and provide a keypad for operator interface with the machine.

C. The analyzer system enclosure shall meet a minimum rating of NEMA 4X for all components of the system. The enclosure shall be suitable for wall, handrail or panel mounting

D. Manufacturers: The UVT analysis system shall be as manufactured as:
   1. HACH UVAS plus sc 50 mm path length with sc200 controller
   2. Or approved equal

2.08 TOTAL ORGANIC CARBON

A. Transmitter:
   1. The microcontroller based system shall be housed within a NEMA 4X (IP65) coated steel enclosure suitable for outdoor installation under shelter. The system shall support a multi-stream (2 streams per instrument), multi-channel arrangement, providing a 4-20 mA output (for each stream) proportional to the measured variable. Operating ambient temperature range of 41° to 105°F (at 5 to 85% humidity, non-condensing) shall be supported; however, system installation shall mitigate strong diurnal temperature fluctuations. The system transmitter shall include two programmable dry contacts plus one general alarm dry contact. Integral LCD display will indicate the measured value and membrane operating keys and status LEDs will support secure user configuration. System shall support limited local data logging and SD Flash Card for system updates. Required power = 120 VAC.
   2. Sensor range may be automatically or manually assigned. Response times at 25°C shall be 6.5 min to 100% of final reading Supported measuring ranges shall be:
      a. Low Range: 0 to 5 ppm (mg/L)
         1) Accuracy: ± 3% of full scale
      b. High Range: 0 to 20 ppm (mg/L)
         1) Accuracy: ± 3% of full scale

B. Total Organic Carbon (TOC) Analysis System.
   1. A two-stage advanced oxidation method is used to completely oxidize the unfiltered sample. Specifically, acid is introduced twice to lower the sample pH to first oxidize inorganic carbon and then again to remove carbon dioxide from the oxidized sample. The dispelled carbon dioxide is measured by a non-dispersive infrared analyzer with the result displayed as total organic carbon. System shall include automated self-cleaning system to mitigate algae growth or buildup of oils or grease. A minimum sample volume of 100ml between 36° - 140°F is required with chloride tolerance of up to 30% and calcium tolerance of up to 12% for all measuring ranges. Supported

measuring range shall be 0.004 to 50 ppm (mg/L) with accuracy ± 2% or ± 0.5 micrograms per liter, whichever is greater.

2. If the sample extraction point is not within 6ft (2m) of the analysis system, a compressor driven vacuum sampler shall be furnished as part of the analysis system.

C. Approved Manufacturers:
   1. The TOC analysis system shall dual-stream and configured with outputs as indicated on the P&IDs. The analysis system shall be as manufactured by:
      a. Suez Sievers M5310 C TOC Analyzer
      b. Or approved equal.
   2. General**:** Analysis systems shall be furnished complete with a one year supply of active/inactive reagents, deionized water, spare compressor (if applicable) and maintenance / cleaning kit. Refer to Section 40 91 00 Appendices for the complete instrument schedule.

2.09 ONLINE STRONTIUM ANALYZER

A. Vendor package system shall be as manufactured by Cooper Environmental, Xact 920 Continuous Water Analyzer (no equal). Analyzer shall perform continuous analysis of metals from water sample by performed spray dried followed by X-ray Fluorescence (XFR). The method detection limit for strontium shall be no more 0.2 parts per billion (ppb) for a RO permeate matrix at an analysis frequency of sixty (60) minutes. Operator can select analysis frequency between 15 and 120 minutes to achieve different detection limits. The strontium analyzer shall come in a temperature controlled NEMA 4X enclosure. The analyzer shall have Modbus TCP/IP port for data transfer to external data management system as well as CAT 5/6 connection for internet access and remote assistance.

B. Power requirements: Approximately 20A at 115 VAC/60 Hz

C. Analyzer dimensions: Shall not exceed 93 inches wide, 76 inches long, 80 inches high, including necessary clearance for servicing analyzer.

D. Compressed air requirements: not to exceed 1 scfm at 80 psig

E. Analyzer weight: not to exceed 1,100 lbs

F. Sampling requirements: The analyzer shall include a multiplex switching manifold to allow ability to measure up to four (4) streams in series and automatically alternate between the different streams at a user-specified order and frequency.

2.10 ONLINE VOC ANALYZER

A. The online volatile organic compounds (VOC) analyzer shall be a vendor package system with the ability to perform continuous analysis of VOCs (halogenated, aliphatic, and aromatic organics) from a water sample via gas chromatography (GC). The method detection limit shall be no less than 0.5 ppb by weight for a UV/AOP effluent matrix. The unit shall contain a microprocessor with Modbus over TCP/IP, USB for local diagnostics, I/O relay contacts, and wireless connectivity. The system must be

configurable for automated data upload and be equipped with an operated interface terminal (OIT) touchscreen,

B. Power requirements: 120VAC, 200W maximum

C. Analyzer dimensions: Shall not exceed 20 inches x 40 inches x 12 inches

D. Carrier gas requirements: 99.999% argon at 60-100 psi

E. Analyzer weight: Not to exceed 60 lbs

F. The system shall be housed in a NEMA 4X enclosure suitable for wall, handrail or panel mounting

G. Manufacturers: The online VOC analyzer vendor package shall be manufactured by:
   1. Inficon Model CMS5000
   2. Or approved equal

2.11 DISSOLVED OZONE ANALYZER

A. Sensor/Analysis: The dissolved ozone analyzer shall be designed for the continuous determination of dissolved ozone in water in the range of 0 to 3 mg/L-O3 (or higher). The method of detection shall be either colorimetric or amperometric.

B. Transmitter: The system shall be housed in a NEMA 4X enclosure suitable for wall, handrail or panel mounting. The system shall support a single or dual channel arrangement, 4-20 mA each, proportional to the measured variable. Operating ambient temperature range of 41°F to 104°F (at 10% to 95% humidity, non-condensing) shall be supported; however, system installation shall mitigate strong diurnal temperature fluctuations. The system transmitter shall include one limit dry contact per channel plus one general alarm dry contact. Integral LED display will indicate the measured value and operating keys and status LEDs will support secure user configuration.

C. Transmitter and sensor shall be from the same manufacturer. Refer to Section 40 91 00 Appendices for the complete instrument schedule

D. Manufacturers: The dissolved ozone system shall be as manufactured as:
   1. Rosemount 1056 Transmitter with 499AOZ Sensor
   2. HACH sc1000 Controller with Hach CI17sc Analyzer
   3. Or approved equal

2.12 DISSOLVED OXYGEN ANALYZER

A. Transmitter: The dissolved oxygen analyzer shall be microprocessor based, capable of the accurate determination of dissolved oxygen in the range 0.00 to 20.00 mg/L or 0-250% saturation in wastewater applications. The transmitter shall be housed in a NEMA 4X enclosure and shall be designed to operate in temperatures ranging from -4 to 140° F and at 0 to 95% relative humidity (non-condensing). The transmitter shall operate on 120 VAC, 60Hz power. The transmitter shall have an LCD with minimum resolution of 128 x 64 pixels with LED backlighting. The transmitter shall have three

SPDT, user configurable contacts rated 100 to 230 VAC, 5 amp resistive maximum. The transmitter shall support two 4-20 mA outputs with maximum impedance of 500 Ohms, and a digital (Modbus) network connection. The transmitter shall have the following inherent control settings: high/low phasing, deadband, overfeed timer, off delay, and on delay. The transmitter shall have the following inherent alarms: Low alarm point, low alarm deadband, high alarm point, high alarm deadband, off delay, and on delay. Transmitter shall support HART protocol.

1. The analyzer smart transmitter shall be as manufactured by:
   a. HACH sc200 Universal Controller, no equal.

B. Sensor: The dissolved oxygen sensor shall be designed for the continuous determination of dissolved oxygen in water, in the range 0.00-20.00 mg/L, using luminescent sensor technology. Sensor probe welted parts shall be constructed of materials chemically resistant to the process and shall be designed to be fully immersed in the process. The sensor shall include automatic temperature compensation using an NTC 30K ohm resistor with a probe temperature range of 32°F to 122°F. Sensor accuracy shall be less than 1 ppm ±0.1 ppm and greater than 1 ppm ±0.2 ppm with repeatability of 0.05 ppm, and resolution of dissolved oxygen at 0.01 ppm or 0.01 mg/l or 0.01% saturation. Sensitivity shall be ± 0.05% of the span. The probe shall be self-calibrating and shall have no membranes or electrodes nor require electrolyte solution. Sensor readings shall be unaffected by changes in pH or by the presence of hydrogen sulfide, crude oil, wastewater chemicals or heavy metals. The sensor shall support manual air calibration for zero reading or single point calibration based on a known laboratory solution. The sensor may be remote mounted from the transmitter up to 300m. The sensor probe shall be warranted for three years against defects in material and workmanship.

C. Manufacturers: Probes shall be submersion-type as indicated on the P&IDs with integral, water-tight, UV-resistant 10m (nominal) sensor cable. The sensor shall be as manufactured by:
   1. HACH, LDO Dissolved Oxygen Probe, no equal.

D. Transmitter and sensor shall be from the same manufacturer. Refer to Section 40 91 00 Appendices for the complete instrument schedule.

PART 3 -- EXECUTION

3.01 GENERAL

A. Electrical interface and code compliance shall conform to the requirements of Section 40 91 00 – PROCESS CONTROLS AND INSTRUMENTATION SYSTEMS.

3.02 CALIBRATION

A. The calibration of all devices shall conform to the requirements of Section 40 91 00 – PROCESS CONTROLS AND INSTRUMENTATION SYSTEMS.

3.03 INSTALLATION

A. The installation of all devices shall conform to the requirements of Section 40 91 00 –

PROCESS CONTROLS AND INSTRUMENTATION SYSTEMS.

3.04 LOOP TESTING

A. The loop testing of all devices shall conform to the requirements of Section 40 91 00 – PROCESS CONTROLS AND INSTRUMENTATION SYSTEMS.

3.05 PRECOMMISSIONING

A. The pre-commissioning of all devices shall conform to the requirements of Section 40 91 00 – PROCESS CONTROLS AND INSTRUMENTATION SYSTEMS.

3.06 ON-SITE SUPERVISION

A. The on-site supervision of all devices shall conform to the requirements of Section 40 91 00 – PROCESS CONTROLS AND INSTRUMENTATION SYSTEMS.

3.07 PERFORMANCE TESTING

A. The performance testing of all devices shall conform to the requirements of Section 40 91 00 – PROCESS CONTROLS AND INSTRUMENTATION SYSTEMS.

3.08 RECORD DRAWINGS

A. Record Drawings shall conform to the requirements of Section 40 91 00 – PROCESS CONTROLS AND INSTRUMENTATION SYSTEMS.

3.09 TRAINING

A. Training for all equipment and software shall conform to the requirements of Section 40 91 00 – PROCESS CONTROLS AND INSTRUMENTATION SYSTEMS.

3.10 ACCEPTANCE

A. All acceptance testing shall conform to the requirements of Section 40 91 00 – PROCESS CONTROLS AND INSTRUMENTATION SYSTEMS.

END OF SECTION

SECTION 40 92 00
CONTROL PANELS

PART 1 – GENERAL

1.01 THE REQUIREMENT

A. General**:** The Contractor shall provide control panels, complete and operable, in accordance with the Contract Documents.

B. The requirements of Section 40 91 00 - PROCESS CONTROLS AND INSTRUMENTATION SYSTEMS apply to this Section.

C. The provisions of this Section apply to local panels provided in equipment systems specified in other sections unless indicated otherwise in those sections.

D. The requirements of Division 26 specifications shall apply to this section.

1.02 CONTRACTOR SUBMITTALS

A. General: Submittals shall be furnished in accordance with Section 01 33 00 – SUBMITTAL PROCEDURES.

B. Control Panel Engineering Submittal: The Contractor shall submit a control panel engineering submittal (CPES) for each control panel furnished. The CPES shall completely define and document the construction, finish, layout, power circuits, signal and safety grounding circuits, fuses, circuit breakers, signal circuits, internally mounted instrumentation and SCADA system components, face plate mounted instrumentation components, internal panel arrangements, and external panel arrangements. All panel drawings shall, as a minimum, be "B" size with all data sheets and manufacturer specification sheets being "A" size. The submittal shall be in conformance with ISA-S20 - Standard Forms for Process Measurement and Control Instruments, Primary Elements and Control Valves, shall be submitted as a singular complete bound volume or multi-volume package within 120 calendar days after Notice to Proceed, and shall have the following contents:

1. A complete index shall appear in the front of each bound volume. Drawings and data sheets associated with a panel shall be grouped together with the panels being indexed by systems or process areas. Panel tagging and nameplate nomenclature shall be consistent with the requirements of the contract requirements.

2. Scale construction drawings which define and quantify the type and gauge of steel to be used for panel fabrication, the ASTM grade to be used for structural shapes and straps, panel door locks and hinge mechanisms, type of bolts and bolt locations for section joining and anchoring, details and proposed locations for "UNISTRUT" members, stiffener materials and locations, electrical terminal box and outlet locations, electrical access locations, print pocket locations, writing board locations, and lifting lug material and locations.

3. Scaled physical arrangement drawings drawn to scale which define and quantify the physical groupings comprising control panel sections, auxiliary panels, subpanels, and racks. Cutout locations with nameplate identifications shall be shown.
4. Front of panel layouts for all control panels.
5. Schematic/elementary diagrams shall depict all control devices and circuits and their functions.
6. Wiring/connection diagrams shall locate and identify electrical devices, terminals, and interconnecting wiring. These diagrams shall show interconnecting wiring by lines, designate terminal assignments, and show the physical location of all electrical and control devices.
7. Interconnection diagrams shall locate and identify all external connections between the control panel/control panel devices and associated equipment. These diagrams shall show interconnecting wiring by lines, designate terminal assignments, and show the physical location of all panel ingress and egress points.
8. Control sequence diagrams to portray the contact positions or connections required to be made for each successive step of the control action. Written descriptions explaining the control sequence diagrams and system operation shall be furnished.
9. Completed ISA S20 data sheets for all instrumentation devices associated with each control panel supplemented with manufacturer specification sheets which verify conformance to the requirements of the Contract Documents
10. A bill of materials which enumerates all devices associated with the control panel.
11. A priced listing of analog spare parts in conformance with Section 40 91 00 - PROCESS CONTROLS AND INSTRUMENTATION SYSTEMS.

PART 2 – PRODUCTS

2.01 GENERAL

A. Environmental Suitability: Indoor and outdoor control panels and instrument enclosures shall be suitable for operation in the ambient conditions associated with the locations designated by the Contractor. Heating, cooling, and dehumidifying devices shall be provided in order to maintain all instrumentation devices 20 percent within the minimums and maximums of their rated environmental operating ranges. The Contractor shall provide all power wiring for these devices. Enclosures suitable for the environment shall be provided. Instrumentation in hazardous areas shall be suitable for use in the particular hazardous or classified location in which it is to be installed.

B. The control panel controls shall be 120 VAC. Where the electrical power supply to the control panel is 240 VAC single phase or 480 VAC 3-phase, the control panel shall be provided with a control panel transformer. Control conductors shall be provided in accordance with the indicated requirements.

C. The control panel shall be the source of power for any 120 VAC solenoid valves interconnected with the control panel. Equipment associated with the control panel shall be ready for service after connection of conductors to equipment, controls, and control panel.

D. The main feeder disconnect shall have a door-mounted handle unless otherwise indicated.

E. Unless indicated otherwise, control panels shall be housed in NEMA rated enclosures. Control panels shall be either freestanding, pedestal-mounted or equipment skid-mounted, as indicated. Internal control components shall be mounted on an internal back-panel or side-panel as required.

F. Each source of foreign voltage shall be isolated by providing disconnecting or pull-apart terminal blocks or a disconnect operable from the control panel front. Each control panel shall be provided with identified terminal strips for the connection of all external conductors. The Contractor shall provide sufficient terminal blocks to connect 25 percent additional conductors for future use.

G. Motor starters, where required, shall be furnished, installed, and configured by others (reference Section 40 93 00 for Contractor system communication requirements). Each motor starter shall be provided with contact closures for motor overload, local indication, and remote alarm. Electrical components shall be of standard American manufacture.

H. Discrete outputs from the control panel shall be provided by electrically isolated contacts rated for 5 amps at 120 VAC. Analog inputs and outputs shall be isolated 4-20 mA, 2-wire signals with power supply.

I. Programmable Logic Controllers (PLCs) may be supplied in lieu of relays, provided the programmable logic controllers match the PLCs provided under Section 40 95 10 - PLC-BASED CONTROL SYSTEMS HARDWARE.

J. Control panel mounted devices shall be mounted a minimum of 42-inches above finished floor elevation.

K. Painting: Steel control panels shall be thoroughly cleaned, and sand blasted per Society for Protective Coatings SP 6 (Commercial Blast) after which surfaces shall receive a prime coat of Amercoat 185H or equal, 3-mils DFT, for a total thickness of the prime plus finish system of 6 mils. The finished color of the outside surfaces shall be selected by the Engineer, unless otherwise indicated. Interior of the control panel, back-panel, and side panels shall have a white finish coat.

L. Panels shall be assembled in accordance with published UL-508 standards and shall prominently bear the UL-508 label as well as the applicable Nema rating label after final assembly.

2.02 CONTROL PANELS

A. Materials

1. Panel section faces shall be No. 10 gauge minimum thickness for free standing panels and No. 14 gauge minimum thickness for wall mounted or pedestal mounted panels. Materials shall be selected for levelness and smoothness.
2. Relay rack high density type panels shall utilize standard relay racks with No. 14 gauge steel frame and supports.
3. Structural shapes and strap steel shall comply with ASTM A 283 - Low and Intermediate Tensile Strength Carbon Steel Plates, Grade C.
   a. Bolting Material: Commercial quality carbon steel bolts, nuts, and washers shall be 1/2-inch diameter with UNC threads. Carriage bolts shall be used for attaching end plates. All other bolts shall be hex end machine bolts. Nuts shall be hot pressed hex, American Standard, heavy. Standard wrought washers shall be used for foundation bolts and attachments to building structures. Other bolted joints shall have SAE standard lock washers.
4. Construction: Dimensions shall be in accordance with vendor's requirements. Elevations and horizontal spacing shall be subject to Engineer's approval.

B. Fabrication

1. End plates, top plates, and top closure panels (to hung ceiling) shall be provided when required by the material requisition. End plates, top plates, and top closure panels shall be removable with countersunk bolts to match panels. Top closure panels shall be furnished in lengths which match the widths of standard panels, except that one top closure panel may extend across two 4-foot 6-inch wide or five 2-foot wide standard panels. The vertical joints of these panels shall align with the vertical joints of the standard panels.
2. End closure or rear closure doors shall be provided where required. Such doors shall be flush fitting, gasketed, and be of the hinged lift-off type with lockable door handles. A common key shall be provided for all doors on one panel assembly. Removable access panels shall be provided with dished handle fasteners. Screwdriver 1/4 turn or Dzus type fasteners are not acceptable.
   a. The flanged edges of all panels shall be straight and smooth. Corners shall be welded and ground smooth.
   b. The face of the panel shall be true and level after flanging.
   c. All panel cutouts and holes may be cut or drilled by any standard method that does not cause deformation. Burrs shall be ground smooth.
   d. Adjacent panels shall assemble with faces flush. Gaps or cracks shall not be visible from the front of the assembled instrument board.
   e. Stiffeners shall be welded to the back of panels, as required to prevent panel deformation due to the weight of face mounted instruments.
   f. Panels shall be self-supporting as defined below.

C. Framework and Supports

1. The rear of each panel section shall have a steel framework assembled to it for supporting conduit, wireways, switches, piping, and instrument accessory items such as relay or terminal enclosures, transducers, pressure switches, valves, and air relays. The main framework shall be constructed of standard structural shapes. Special shapes such as "Unistrut" may be used for secondary supports. Framework must neither interfere with instrument connections nor interfere with access needed for maintenance or adjustments.

2. Steel framework shall extend 2-feet 4-inches back from the panel face or as indicated in the material requisition. Where indicated, individual adjustable leg supports shall be provided at the back of the framework so that the entire panel is self-supporting.

D. Preparation of Panel Surface

1. The following requirements apply to the front and rear face of the panel, both sides and the edges of all flanges, and the periphery of all holes or cutouts.

   a. High spots, burrs, and rough spots shall be ground smooth.

   b. The surfaces shall be sanded or sandblasted to a smooth, clean, bright finish.

   c. All traces of oil shall be removed with a solvent.

   d. The first coat of primer shall be applied immediately.

E. Panel Finishing

1. A Thin coat primer surface shall be applied over the entire panel surface.

2. Wet sand, dry, then quick glaze spot putty on the front of the panel only. Dry, then wet sand again and dry

3. A primer surface shall be applied on the front of the panel only.

4. Wet sand to smooth clear finish, then dry.

5. At least 2 coats of air-dry, satin finish lacquer enamel shall be applied over the entire surface. Color to be as approved by Engineer.

6. Contractor shall supply 2 one-pint containers of air drying, matching paint for field touch-up of the panel face.

F. Instrument Finishing: The final coats applied to painted surface of instrument cases, doors, or bezels which are visible from the front of panels shall be manufacturer's standard unless otherwise indicated. Black japan or "crinkle" finishes on instrument cases are not acceptable.

G. Mounting of Instruments

1. The panel vendor shall provide cutouts and shall mount all instrument items indicated to be panel mounted, including any instruments indicated to be furnished by other vendors but installed in the panel.

2. The panel vendor shall also mount behind the panels other instrument accessory items as required for functionality as indicated.

3. Equipment mounted at the rear of panel shall be installed to allow for commissioning adjustments, servicing requirements, and cover removal.

4. Spare space shall be kept clear of wiring, etc., to give maximum space for future additions.

H. Electrical Requirements

1. The Contractor shall provide conduit, wireways, switches, wire, and electrical fittings for 120 volt circuits to instruments and other electrical devices as required for a complete and operable installation.
2. Conduit, wireways, junction boxes and fittings shall be provided for signal wire, thermocouple, or resistance thermometer lead wire. Conduit or wireway runs shall include those required between temperature sensors and temperature transmitters and between the thermocouple wireway or junction box and instruments.
3. Each terminal connection shall have a plastic plate with a terminal and instrument tag number. Wiring shall be identified with stamped tubular wire end markers.
4. Freestanding panels shall be provided with switched 100 watt incandescent back-of-panel lights. One light shall be provided for every 4-feet of panel width and shall be mounted inside and in the top of the back-of-panel area.
5. Freestanding panels shall be provided with a 15 amp, 120 volt, service outlet circuit within the back-of-panel area. The circuit shall be provided with 3 wire, 120 volt, 15 ampere, duplex receptacles, one for every 4-feet of panel width (one minimum per panel), spaced evenly along the back-of-panel area.
6. Wall mounted or pedestal mounted panels shall be so sized as to adequately dissipate heat generated by equipment mounted in or on the panel.
7. Wall mounted or pedestal mounted panels mounted outside or in unshaded areas shall be provided with thermostatically controlled heaters that maintain inside temperature above 40 degrees F.
8. Provide a hand switch controlled 100 watt incandescent light and a breaker protected 120 volt, 15 amp duplex receptacle within each wall mounted or pedestal mounted panel larger than 4 cubic feet volume.
9. Wiring Methods: Wiring methods and materials for all panels shall be in accordance with the NEC requirements for General Purpose (no open wiring) unless otherwise indicated.
10. Signal and Control Circuit Wiring
    a. Wire type and sizes: Conductor shall be flexible stranded copper machine tool wire, UL listed Type MTW, and shall be rated 600 volts. Wires for instrument signal circuits and alarm input circuits shall be No. 14 AWG. All other wires, including shielded cables, shall be No. 16 AWG minimum.
    b. Wire Insulation Colors: Conductors supplying 120 VAC power on the line side of a disconnecting switch shall have a black insulation for the ungrounded conductor. Grounded circuit conductors shall have white insulation. Insulation for ungrounded 120V AC control circuit conductors shall be red. Wires energized by a voltage source external to the control panel shall have yellow insulation. Insulation for DC conductors shall be blue.

c. Wire Marking: Wire numbers shall be marked using white numbered wire markers made from plastic-coated cloth, Brady Type B-500 or equal, or shall be heat shrink plastic.

d. Flexible conduit is not acceptable except when specifically approved by the Engineer in writing.

e. Conduit fittings shall be Crouse Hinds cast fittings or equal.

f. For case grounding, panels shall be provided with a 1/4-inch by 1-inch copper ground bus complete with solderless connector for one No. 4 AWG bare stranded copper cable. The copper cable shall be provided by the Contractor and shall be connected to a system ground loop.

11. Electrical Locations

a. When the Contract Documents call for thermocouple actuated instruments, the thermocouple lead wire shall be installed without junction by the Contractor. The panel vendor shall provide dedicated empty conduits or wireways running from the instrument(s) to the top or bottom of the panel as called for in the material specifications or as otherwise required. Sizing of the conduit or wireway shall be in accordance with the capacity of the instrument(s).

b. Single case (no remote logic) annunciator units shall be installed at the top of panel and may be considered as a terminal box when top of panel wire entry is indicated. If bottom of panel entry is indicated, a terminal box shall be provided at the bottom of the panel and be wired to the annunciator unit. Terminals shall be identified with plastic marker strips.

c. Terminal boxes for incoming and outgoing signal leads shall be located at the top or bottom of the panel as indicated in the material specification, or as otherwise required.

12. Power Supply Wiring

a. Unless otherwise indicated, instruments, alarm systems, and motor controls shall operate on 120 volt, 60 Hz circuits.

b. At a location near the top of the panel (or bottom), the panel fabricator shall provide terminal box connections for the main power supply entry.

c. Power supply switches for alarm units shall be 3 pole type, arranged to open both power circuits and alarm circuits. Each annunciator unit shall be equipped with a separate switch.

d. Instruments located on the same panel section and serving the same process unit may be connected to a common branch circuit from the power supply. The number of circuits depends on the circuit load as noted herein. A 15 amp, 2 pole circuit breaker shall be provided in each branch circuit. The circuit load shall not exceed 10 amp. Different panel sections or different process units must not use common branch circuits. When instruments do not come equipped with integral fuses, provide fuses as required for the protection of individual instruments against fault currents. Fuses shall be dinrail-mounted on the panel backplane in a fuse terminal block with each

fuse identified by a service name tag. Fuses shall be as manufactured by Weidmuller SAK Series KDKS or equal.

e. Each potentiometer type instrument, electronic transducer, controller, or analyzer shall have an individual disconnect switch. Disconnect switches shall have metal or plastic tags indicating instrument tag numbers. Individual plug and cord set power supply connections may be used without switches when indicated in the material specification.

f. Where alarm units are single unit types, one switch may be used to disconnect not more than 6 alarm units located on the same or adjacent panels.

13. Alarm Wiring: The panel vendor shall install and wire alarms including light cabinets, audible signal units, test and acknowledge switches, and remote logic units as indicated. Interconnecting wiring to panel mounted initiating devices shall also be wired by the panel vendor. The wiring from external initiating devices shall be provided by the Contractor. Where plug and cord sets are provided for component interconnection, the panel vendor shall harness and support the cables in neat and orderly fashion. Where separate wire is required, panel vendor shall install No. 16 AWG with THWN or THHN insulation between all components.

14. Signal Wiring

a. Signal Wire - Non Computer Use

1) Signal wire shall be twisted pair or triads in conduit or troughs. Cable shall be constructed of No. 16 AWG copper signal wires with THWN or THHN insulation.

2) Color code for instrument signal wiring shall be as follows:

Positive (+) – Black

Negative (-) - White

3) Multiconductor cables where indicated shall consist of No. 16 AWG copper signal wires twisted in pairs, with 90-C, 600 V fault insulation. A copper drain wire shall be provided for the bundle with a wrap of aluminum polyester shield. The overall bundle jacket shall be PVC.

b. Signal Wire - Computer Use

1) Signal wires shall be similar to those for non-computer use but each pair shall be triplexed with a copper drain wire and aluminum polyester tape shall be applied over the triplexed group. Cable shields, including thermocouple extension leads shall be terminated in the central control room at the computer system grounding bus. Continuity of the shield shall be maintained throughout the cable runs.

c. Multi-conductor cables, wireways and conduit shall be sized to allow for 10 percent spare signal wire.

I. Labor and Workmanship: Panels shall be fabricated, piped, and wired by fully qualified workmen who are properly trained, experienced, and supervised.

2.03 SCADA SYSTEM ENCLOSURES

A. Each SCADA system PLC and remote I/O system and corresponding housing, I/O modules, power supply modules, communication interface devices, and peripheral equipment shall be mounted inside a 304 stainless steel NEMA 12 enclosure (for indoor installation within controlled environments), complete with key-locking handle, heating strip, interior lighting kit, window kit, thermostat driven ventilation fans and screened exhaust vents. Process area or sheltered outdoor panels shall be 316 stainless steel Nema 4X panels with 3-point latching handle (Hoffman Powerglide), heating strip, interior lighting kit, corrosion inhibitor and recirculation fans (strategically located to cool critical components). Outdoor exposed mounted panels shall be similarly configured with the addition of 316 stainless steel sunshields on all sides. Refer to installation detail I-940 for sunshield stand-off requirements.

B. All PLC and remote IO cabinets shall also include the following components, wired to the panel I/O for control system monitoring:
   1. Panel interior high temperature alarm switch
   2. Panel intrusion switch (one for each door)
   3. 24Vdc primary and secondary power supply status monitoring (as detailed in specification 17100-2.1-J).
   4. Controller webpage monitoring (as applicable)

C. For all panels, I/O wiring from the field to the remote I/O system shall be terminated on terminal blocks in the lower portion of the enclosure. Sufficient terminal blocks shall be provided to accommodate the full I/O compliment of the furnished I/O racks. A nameplate shall be mounted on the outside of the door of the enclosure and be engraved with "PLC-X" or "RIO-X" where "X" is the number or description as shown on the contract drawings. (Nameplates shall be as detailed in specification 16050-2.3: Electrical Identification.)

D. Dimensions shown on the contract panel elevation drawings are provided as reference only. Final enclosure dimensions shall be as established by the Contractor to accommodate all components required plus spare. Enclosures shall be as manufactured by Hoffman, or equal.

E. All panels furnished shall adhere to the requirements of NEC article 409 (SCCR).

2.04 SPARE PARTS AND SPECIAL TOOLS

A. In Control panel spare parts selected by the ENGINEER and special tools shall be furnished in accordance with Section 40 91 00 - PROCESS CONTROLS AND INSTRUMENTATION SYSTEMS.

PART 3 – EXECUTION

3.01 INSTALLATION

A. Preparation for Shipment and Shipping

1. Panels shall be crated for shipment using a heavy framework and skids. Panel sections shall be cushioned to protect the finish of the instruments and panel during shipment. Instruments which are shipped with the panel shall further have suitable shipping stops and cushioning material installed to protect parts which could be damaged due to mechanical shock. Each separate panel unit shall be provided with removable lifting lugs to facilitate handling.
2. Shipments shall be by air ride van unless otherwise indicated.
3. Control panel testing and inspection shall be performed prior to shipping.
4. Control panels shall be installed in accordance with Section 40 91 00 - PROCESS CONTROLS AND INSTRUMENTATION SYSTEMS.

3.02 CONTROL PANEL SIGNAL AND CONTROL CIRCUIT WIRING

A. Wiring Installation: Wires shall be run in plastic wireways except (1) field wiring, (2) wiring between mating blocks in adjacent sections, (3) wiring from components on a swing out panel to components on a part of the fixed structure, and (4) wiring to panel mounted components. Wiring run from components on a swing out panel to other components on a fixed panel shall be made up in tied bundles. These bundles shall be tied with nylon wire ties and shall be secured to panels at both sides of the "hinge loop" so that conductors are not strained at the terminals.

B. Wiring run to control devices on the front panels shall be tied together at short intervals with nylon wire ties and be secured to the inside face of the panel using adhesive mounts.

C. Wiring to rear terminals on panel-mount instruments shall be in plastic wireways secured to horizontal brackets above or below the instruments in about the same plane as the rear of the instruments.

D. Shop Drawings shall show conformance to the above wiring installation requirements.

E. Wire Marking: Each signal, control, alarm, and indicating circuit conductor connected to a given electrical point shall be designated by a single unique number which shall be shown on Shop Drawings. These numbers shall be marked on conductors at every terminal. Wire labels shall be generated by a portable label printer with self-adhesive labels. Label printer shall be as manufactured by Brady, BMP41 Model or equal.

3.03 CALIBRATION, TESTING, AND INSTRUCTION

A. General**:** Calibration, testing, and instruction shall be performed in accordance with Section 40 91 00 - PROCESS CONTROLS AND INSTRUMENTATION SYSTEMS.

END OF SECTION

SECTION 40 93 00

PLANT CONTROL PHILOSOPHY

PART 1 -- GENERAL

1.01 DOCUMENT CONVENTIONS AND PURPOSE

A. The following terms, used throughout this document, shall be as defined below:
   1. “Will”, “shall” or “must” indicates a mandatory requirement or course of action.
   2. “Should” indicates a recommended requirement or course of action
   3. “May” or “can” indicates a possible course of action.

B. This document outlines the basic control philosophy for the Point Loma Water Treatment Plant (PLWTP) Central Area Small-Scale Facility (CASSF) Project and describes the site control requirements to be read in conjunction with the various mechanical equipment specification sections and referenced against the project Process and Instrumentation Drawings (P&IDs), electrical control schematics, specs and plans.

C. Any deviation from the requirements of this document must be approved in writing by the Engineer or authorized representative.

1.02 THE REQUIREMENT

A. General**:** The Contractor, through the use of a qualified and directly contracted System Integrator, shall be responsible for configuring and programming PLC and HMI hardware for implementation of the control philosophies described in this section, the functions detailed on the Contract drawings, and the points listed in the I/O schedule. The requirements of Specification Section 40 91 00 – PROCESS CONTROL AND INSTRUMENTATION SYSTEMS (PCIS) apply to this section. Vendor package suppliers, also under contract with Contractor, shall be subject to the same responsibilities and requirements (and further as detailed in section 2.1).

B. PLC controller programs shall be capable of functioning normally in the absence of an HMI station without any special modifications. Process logic, including monitoring, control and alarming functions shall be programmed at the PLC controller level only. Vendor PLC-based control packages shall be subject to the same requirements.

C. Abbreviations used in this section:

A/M	Auto/Manual
AAH	Analyzer Alarm High
AAHH	Analyzer Alarm High-High
AAL	Analyzer Alarm Low
AALL	Analyzer Alarm Low-Low
ACK	Acknowledge
AOP	Advanced Oxidation Process
ATC	Automatic Transfer Controller
AWP	Advanced Water Plant
AWT	Advanced Water Treatment
BAC	Biological Activated Carbon

BNR	Biological Nutrient Removal
CASSF	Central Area Small Scale Facility
CEB	Chemically Enhanced Backwash
CIP	Clean-In-Place
CT	Contact Time
DCS	Distributed Control System
DLR	Device Level Ring
DO	Dissolved Oxygen
DOL	Direct On-Line (Starter)
EC	Electrical Conductivity
EED	Electrical Energy Dose
FAL	Flow Alarm Low
FAH	Flow Alarm High
GPS	Global Positioning System
GUI	Graphic User Interface
HMI	Human Machine Interface
HOA	Hand-Off-Auto
HOR	Hand-Off-Remote
I/O	Input / Output
L/R	Local/Remote
LAH	Level Alarm High
LAHH	Level Alarm High-High
LAL	Level Alarm Low
LALL	Level Alarm Low-Low
LCP	Local Control Panel
LCS	Local Control Station
LO	Locked Out
LOA	Local-Off-Auto
LOR	Local-Off-Remote
LRV	Log Removal Value
MF	Membrane Filtration
MBR	Membrane Bioreactor
MCC	Motor Control Center
MLE	Mixed Liquor Effluent
MLR	Mixed Liquor Return
MPRM	Motor Protection Relay Module
NAS	Network Attached Storage
NDMA	N-Nitrosodimethylamine
NdN	Nitrification / De-nitrification
NPW	Non Potable Water
NTP	Network Time Protocol
OCA	Open-Close-Auto
OI	Operator Interface
OSC	Open-Stop-Close
PAH	Pressure Alarm High
PAHH	Pressure Alarm High-High
PAL	Pressure Alarm Low
PALL	Pressure Alarm Low-Low
PD	Positive Displacement
PDT	Pressure Differential Transmitter
PEB	Prefabricated Electrical Building
PID	Proportional + Integral + Derivative
PLC	Programmable Logic Controller
PLWTP	Point Loma Water Treatment Plant
PSA	Pressure Swing Absorption

RAS	Return Activated Sludge
RED	Reduction Equivalent Dose
RIO	Remote Input / Output
RO	Reverse Osmosis
RVSS	Reduced Voltage Soft Starter
SCADA	Supervisory Control and Data Acquisition
SOP	Standard Operating Procedure
S/S	Start/Stop
TAH	Temperature Alarm High
TAHH	Temperature Alarm High-High
TBC	To Be Confirmed (By the Engineer prior to or at the FAT)
TBD	To Be Determined (By the Engineer or Vendor during field commissioning)
UPS	Uninterruptible Power Supply
UV	Ultra-Violet
UVT	Ultra-Violet Transmittance
UW	Utility Water
VCP	Vendor Control Panel (Supplied by Equipment or Package Vendor)
VFD	Variable Frequency Drive
VSD	Variable Speed Drive (Integral to Metering Pumps)
WAS	Waste Activated Sludge

D. The Contractor (and Vendor package suppliers) shall reference mechanical drawings and specification sections and electrical equipment location plans, specifications and control schematics as noted on the P&ID drawings for additional control clarifications.

PART 2 -- PRODUCTS

2.01 THE CONTROL SYSTEM ARCHITECTURE

A. The proposed control system architecture for the CASSF is shown on the control network architecture as a solely PLC-based control system employing the Allen-Bradley line of processors. A ControlLogix PLC, located in the CASSF control room will serve as the main controller providing a control interface to all new vendor and non-vendor systems. To the fullest extent possible, major equipment systems will include packaged consolidated controls at their respective vendor PLC. The following PLC-based vendor packages are anticipated:

1. Self-cleaning Strainer
2. BNR / MBR
3. Ozone (Murray Train)
4. BAC (Murray Train)
5. MF (Murray Train)
6. Alternate RO technologies, each with a dedicated PLC:
   a. Conventional RO Murray Train)
   b. Closed Circuit RO Murray Train)
   c. Forward-Reverse RO (Murray Train)
   d. Conventional RO (San Vicente Train)
7. UV System No. 1(Murray Train)
8. UV System No. 2 (San Vicente Train)

B. Each packaged equipment system will include (as a minimum) an Allen Bradley CompactLogixPLC, an operator interface), and network switch. Each packaged equipment vendor control panel will be networked in a star topology, over unshielded twisted pair CAT 6 cable to the Control System Server and Communication Cabinet, which will manage system operation and serve as the interface for remote monitoring and alarm management. Native Allen-Bradley, Ethernet / IP protocol will be used to facilitate seamless control/monitoring with the various vendor packages. Each system vendor will solely be responsible for the control programming, monitoring requirements, and safety functions required for proper operation of the vendor furnished equipment. The OIs only serve to provide a local interface to the packaged control system and limited repository of collected data for generation of performance trends. All drives and starters will be networked in a star configuration over Ethernet / IP to their respective packaged equipment system or vendor control panel. Additionally, an uninterruptible power supply (UPS) networked over CAT 5e cable will provide backup power to all instrumentation and control equipment.

C. The CASSF is intended to operate as a standalone system and include two workstations/screens furnished with the necessary control system software (FactoryTalk) and support applications provided for operation from the CASSF control room. The control system screens will allow for monitoring and control of the various process systems and include support for alarm monitoring, historical data trending, and report generation / viewing. For historical data trending and report generation, Factory Talk Historian shall be used local to the CASSF. Field access to the control system via industrial, panel-mounted, Allen Bradley PanelView OIs are made available at all PLC-based vendor control panels as a vendor system local interface.

D. While the CASSF is intended to operate independent of the PLWTP Distributed Control System (DCS), the CASSF main PLC will be connected to the existing PLWTP DCS to support remote alarming and notification of critical CASSF alarms (defined below) to PLWTP operations staff. Traditional hardwired I/O shall be used to transmit the signals from the CASSF PLC to the existing DCS, via the existing MCC 3 building. The existing PLWTP HMI screens shall be modified to include a simplified overview graphic of the CASSF to support remote monitoring and alarming of the CASSF – no control functionality will be available from the PLWTP HMI other than Start/Stop of the Primary Influent and Primary Effluent pumps. Programming of the existing PLWTP DCS and HMI screens shall be performed by the Contractor. The following initial alarms and statuses will be made available for display at the PLWTP HMI:

1. Major System Failure Alarms:
    a. Self-Cleaning Strainer system failure alarm
    b. BNR / MBR system failure alarm
    c. Ozone (Murray Train) system failure alarm
    d. BAC (Murray Train) system failure alarm
    e. MF (Murray Train) system failure alarm
    f. Conventional RO Murray Train system failure alarm
    g. CCRO (Closed Circuit RO Murray Train) system failure alarm
    h. FRRO Forward-Reverse RO (Murray Train) system failure alarm
    i. Conventional RO (San Vicente Train) system failure alarm

j. UV System No. 1(Murray Train) system failure alarm
k. UV System No. 2 (San Vicente Train) system failure alarm

2. BNR Aeration Blower No. 1 Failure
3. BNR Aeration Blower No. 2 Failure
4. Acetic Acid Chemical Tank High-high level alarm (overflow)
5. Acetic Acid Chemical Area Leak Alarm
6. Liquid Ammonium Sulfate Chemical Storage Tank High-high level alarm (overflow)
7. Liquid Ammonium Sulfate Chemical Area Leak Alarm
8. Sodium Hypochlorite Chemical Storage Tank High-high level alarm (overflow)
9. Sodium Hypochlorite Chemical Area Leak Alarm
10. Sulfuric Acid Chemical Area Leak Alarm
11. Sodium Bisulfate Chemical Storage Tank High-high level alarm (overflow)
12. Sodium Bisulfate Chemical Area Leak Alarm
13. Citric Acid Storage Tank High-high level alarm (overflow)
14. Citric Acid Chemical Area Leak Alarm
15. Sodium Hydroxide Storage Tank High-high level alarm (overflow)
16. Sodium Hydroxide Chemical Area Leak Alarm

E. A dedicated communication cabinet, located in the Prefabricated Electrical Building (PEB), housing fiber optic patch panels, ethernet switches and servers with the required applications will be included in the CASSF PEB. All new process control systems will tie into the standalone historian server, which serves as the main repository of the collected system data. The historian will incorporate the new equipment performing data analysis and automatically generate reports with pre-arranged process data displayed. The historian server will be configured to collect, store, and trend data. All plant input/output will be displayed on the CASSF workstation screens, and all analog data (as well as alarms and status points) will be historically collected, recorded, and trended.

F. The Control System Architecture for the CASSF PEB and packaged equipment system vendor PLC's will be as arranged on drawing I-06.

2.02 PLC/HMI CONTROL FUNCTIONS

A. General: PLC/HMI requirements are as listed in the sub-sections below and are generally applicable to Vendor developed PLC/OI control packages except where specifically noted as "Not Applicable to Vendor Packages".

B. Development Overview and Access: The PLC HMI shall display the status or value of all PLC controller input and output points described in this section, detailed in the I/O schedule and shown on the P&ID drawings. In addition, the PLC HMI shall serve as a parallel interface point for all networked vendor package controllers, displaying the status or value of all shared I/O points as well as providing access to vendor package control points and setpoint entries. Unless specifically directed otherwise by the Engineer in writing, controller and OI / HMI control screen development requirements shall be subject to the requirements detailed herein. and the following specification sections:

1. Section 40 95 10 – PLC-BASED CONTROL SYSTEMS HARDWARE

2. Section 40 95 20 – PLC-BASED CONTROL SYSTEMS SOFTWARE

C. Access to the PLC HMI (and vendor control package OIs) will be password restricted to authorized personnel only with increasing authority required to effect system changes. Access rights shall be established at the Domain level. In general, PLC HMI base access groups will be defined as follows:

1. Maintenance Group – view access to specific equipment usage / performance summary screens (with pre-defined historical and real-time trend pop-ups), alarm screens and Viewpoint Navigation screen. No other view, write or control access rights. Alarm acknowledgement will also be restricted.

2. Operations Group – typically granted equipment and process control rights but limited access to process control configuration / tuning parameters. Specific operator adjustable values shall be as defined in the detailed control descriptions. Access to generated (but read-only versions) of system reports and predefined trends shall be supported as well as creation of temporary ad-hoc trends and print screen access.

3. Supervisory Group – typically granted administrative level rights within the control system software environment but only limited (if any) access to the operating system. Supervisors shall have access to all operator adjustable values as well as process control configuration / tuning parameters and alarm configuration. Specific supervisor tunable values shall be as defined in the detailed control descriptions. Ability to create new trends, modify existing trends, create reports and modify existing report templates shall be supported.

4. Administrator / Developer – full application and operating system level administrative access rights.

D. Controller Setpoint Handling:

1. Operator entered setpoints shall be constrained to match PLC programmed setpoint ranges. If a value lower than the setpoint range is entered, the PLC program defaults to the lowest possible range value. If a value higher than the setpoint range is entered, the PLC program defaults to the highest possible range value. The PLC shall prohibit entry of setpoint values beyond the operational range of a system or process. In general, confirmed PLC setpoint entries become the default program values. All system setpoints are to be made adjustable at the HMI by authorized users as detailed in the individual control philosophy sections.

2. Should a PLC reboot occur, through purpose or uncontrolled event, the PLC program shall be automatically restored with last setpoint entries. No operator intervention shall be necessary to bring a freshly rebooted controller online and operational.

E. Controller Run Output Handling

1. In general, a PLC issued motor run command signal shall be propagated as a maintained contact. However, the PLC run command output signal must be disabled under the following conditions:

    a. Equipment stop issued (by the PLC, operator or Local Auto logic).

    b. Equipment fail detected.

    c. Equipment placed in local control at the equipment, outside of PLC control.

    d. Power-loss (black-out) condition detected.

2. If separate START and STOP (or Open and Close) outputs have been allowed for, once initiated, the PLC shall maintain the selected output for no less than 3 seconds to allow the local logic sufficient time to latch in the PLC issued command signal.

F. Significant Digit Usage: All HMI display values will be configured to show a minimum of 1 significant digit except in the following cases where 2 significant digits are required:

1. Flow readings (where the primary reading is scaled to 3 digits or less)

G. Control Mode Definitions – as a function of defining system control logic, it is necessary to define the manner and extent of control available at the major control access layers. Typical access layer control definitions are provided here as reference.

1. Local Control Mode (Field Selected): This mode of control refers to the first line of operator initiated control functions available at the equipment and/or drive/starter and by definition PLC independent. This mode of operation, although available in most cases, will be generally restricted to maintenance activities except where specifically noted otherwise.

2. Local Safety Interlocks: This level of control is not selectable and is always active. It specifically refers to protection logic integral to the equipment or equipment package that is directly interlocked with the equipment controls and which automatically executes regardless of the current method of operation.

3. Controller Programmed Software Interlocks: This level of control is not selectable and is always active unless parameter bypass selection is required to be HMI accessible and then invoked by a Supervisor. It specifically refers to protection logic programmed at the PLC with an output that is directly hardwire interlocked with the equipment controls and which automatically executes regardless of the current method of operation. Note: The output will be wired fail-safe such that in the event of controller failure, the equipment will be forced to stop.

4. Local Auto Control Mode (HMI or Field Selected – subject to package configuration): This mode of control refers to independent operational logic integral to the equipment or equipment package that is responsible for the proper operation of the equipment. The operational logic may execute based on remote command triggers (e.g. start/stop, open/close, etc.) or field inputs (e.g. flow, pressure, level,

temperature, etc.). Local auto mode may be bypassed through selection of local control mode (if available).

5. Remote/SCADA Manual Control Mode (HMI Selected): This mode of control refers to operator initiated control functions available via the control system operator interface, HMI or LCP but executed via the PLC control logic (i.e., all PLC process interlocks and safety functions remain engaged).

6. Remote/SCADA Auto Control Mode (HMI Selected): This mode of control refers to PLC initiated control functions which are automatically executed and managed by the PLC logic, operator independent.

7. Other control modes applicable to a specific process or system shall be as defined in Part 3.

H. Historical Data Collection and Display: The control system shall historically collect, trend and record, in the historical database, all analog input and output data represented on the Contract Drawings and I/O Schedule at a one second interval. In addition, the HMI shall:

1. Log (daily and lifetime) runtimes to the historical database for all monitored equipment.

2. Log the number of starts to the historical database for all monitored equipment.

3. Calculate and log daily (and other Part 3 required) flow totals for all measured flows.

Note: daily flow totals will be summed and recorded over a 24-hr period from 12am to 12am with allowance for daylight savings time (DST) annual time shift.

I. Trending Format – General: As a minimum, trends shall display the process variable, the transmitter tag, a clear description and the units for both axes. For variables which are controlled by the PLC, both the setpoint and the controlled process variable shall be displayed on the same trend. Where multiple variables are displayed, separate and distinct colors shall be used for each variable along with a color key with clear descriptions defining each variable. The System Integrator shall be responsible for providing PLC programming to support the above log points. All logic required to develop the above I/O for historical collection at the HMI shall be provided by the System Integrator.

J. Alarm Terminology: The following alarm terms will be used throughout this document.

1. Permissive: PLC tracked Input, status, interlock and/or process variable value required to allow start of a piece of equipment or a process to proceed. Although lack of permissive will inhibit start, loss of permissive will not necessarily generate a fault once the equipment or process is operational.

2. Warning or System Alert: PLC generated low priority alarm intended to alert Operators to process or equipment operation drift outside of norm. Typically, the gap

between “warning” and “alarm” is sufficient to allow Operator response to avoid an alarm/trip condition.

Note 1: System alerts are also utilized at specific field equipment locations to alert area personnel to imminent start of rotating equipment. System alerts (typically in the form of beacons and/or horns) are only used in areas of potentially unsecured (i.e. exposed and/or approachable) rotating equipment which may start unexpectedly.

3. Alarm or Trip PLC generated high priority alarm or interlock intended to alert Operations to PLC execution of equipment or process protective measures OR imminent fault condition requiring operator intervention / action.

K. Alarm History: The entire system alarm history (inclusive of system warnings, alarms and advisories) shall be made accessible at the HMI to all authorized users. The Alarm History shall be established as read-only from the moment of system field initialization. An alarm configuration screen at the HMI shall allow a Supervisor to enable or disable any HMI warning or alarm notification without the need to access the control system software back office tools. Other related requirements:

1. Warnings / Alarms related to HMI displayed field equipment and facilities shall be displayed on the related system control screen as well as recorded in the historical alarm summary. Reference Specification Section 40 95 20 for additional control screen development requirements.

2. Warnings / Alarms may be assigned to one of four (maximum) sub-groups. The alarm sub-groups shall be as defined at the conclusion of the project Graphics Meetings.

L. Fault Detection / Handling:

1. Unresponsive Equipment: In addition to monitoring fail contacts for controlled equipment, if at any point a device fails to start, stop, open or close as commanded by the PLC, a “Fail to Respond” condition shall be generated by the PLC and displayed at the HMI. PLC generated “Fail to Respond” fault, as well as any other logically generated fail condition identified in the detailed control philosophy sections, shall be resettable at the HMI unless specifically noted otherwise. The HMI reset function shall be in the form of a screen button made visible to the Operator at the interlock or control faceplate when a PLC generated fault condition is detected for the associated equipment. “Fail to Respond” specifics shall be as follows:

a. When a drive or starter is being called to run, default “Fail to Respond” fault delay shall be 10sec. If a drive or starter is called to start and run status is not received before expiration of the fault timer (Supervisor adjustable), the controller shall generate a “Fail-to-Respond” alarm and lock-out the equipment.

- In general, the “Fail to Respond” time delay timers (for stop commands in particular) will take into account the drive configured spin-down timer.

b. When a drive or starter is in operation, if the run status is lost for longer than 3secs (Supervisor adjustable), the controller shall generate a “Fail-to-Respond” alarm and lock-out the equipment.

c. In both cases, only an HMI reset will be required to allow the equipment to be restarted.

2. Analog Inputs: The PLC shall generate an instrument or signal fault (Out of Range or PV_Bad) alarm if the analog input from a given field instrument or device is detected to be equal to or less than 3.8mA or equal to or greater than 20.5mA for longer than 10 seconds. The alarm time delay assigned to each signal shall be a Supervisor adjustable value.

   Note: When an instrument is detected to be in fault, system control response to the signal and all associated alarms (e.g. LAHH, LALL, etc.) shall be suspended. Other system response specifics shall be as defined in the Part 3 control detailed control descriptions.

3. Discrete Instrument Warning / Alarm Contacts: The PLC shall process a discrete warning / alarm contact if the contact is detected to be active for longer than a preset (supervisor adjustable) time delay. The default settings shall be 2 seconds unless specifically noted otherwise in the Part 3 detailed control descriptions.

   Note: discrete signals arriving via drive, starter, actuator, LCP or other device which have already confirmed authenticity of the alarm shall be immediately processed by the PLC without time delay unless specifically noted otherwise in the Part 3 detailed control descriptions

M. Event Logging: An event log, separate from the alarm history, shall be made accessible at the HMI (read-only from the moment of system field initialization) to all authorized users. The event log shall date/time stamp and record any discrete change in status of the equipment monitored by the PLC (e.g., Auto/Manual, Local/Remote, Run/Off, Open/Close, Forward-Off-Reverse, Intrusion, Start Sequence Change, Alarm Enable/Disable, etc.). Important notes:

   1. HMI adjustable setpoint values shall be historically collected and trended against the associated process variable or performance parameter.

   2. Events may be assigned to one of four (maximum) sub-groups. The event sub-groups shall be as defined at the conclusion of the project Graphics Meetings.

N. Loop tuning parameters: The PLC HMI interface shall be configured to allow supervisory level users to access all loop tuning parameters (such as Proportional/Interval/Derivative) from the HMI for any control loop. Changing loop tuning parameters shall not require reconfiguring, reprogramming, or reloading of the PLC program. All changes to any loop tuning parameters shall be logged to the historical database and trended as described under paragraph 2.3.L – Event Logging.

O. Equipment READY Logic: The term “READY” (used throughout this document) shall be interpreted as “being available for PLC control”. The following conditions, as applicable, must be satisfied to achieve “READY” status:

1. Field equipment is Available (powered) AND is currently in Remote and/or Auto mode at the starter/drive/actuator (as applicable) i.e. not in Local Control Mode.

2. No fail (interlock) conditions pending (including field E-Stop).

3. No run inhibit (permissive) conditions exist.

   a. Equipment start via the PLC cannot be achieved without the associated equipment satisfying the above “READY” definition. With initiation via the PLC and run status confirmation, the equipment shall be noted to be in REM AUTO RUN or REM MAN RUN mode depending upon HMI operating mode selection.

      1) Note: if the equipment has been started at the starter/drive control interface, the equipment shall be noted to be in LOCAL RUN mode with PLC confirmation of run status

4. Unless specifically stated otherwise in the detailed control descriptions, it will not be necessary to display a “Not Ready” status if the above conditions are not satisfied. However, fail conditions, run inhibit conditions, local control status and run status should be clearly displayed.

P. Local Control Station (LCS) Handling Reference: Where shown on the contract drawings, a local control station shall be provided at the field equipment. Each station shall include one push-pull E-Stop button fail-safe hardwired directly to the starter or drive and which may be engaged with effect regardless of the current operating mode of the equipment or communication means (hardware or fieldbus). Once pressed, the equipment will be immediately disabled at the starter / drive local control level and an alarm generated at the HMI. Release of the LCS E-stop button and reset of the alarm condition at the drive and the HMI will cancel the emergency stop.

Q. Process Control Deviation: Throughout the various plant processes, the PLC will be required to control and manipulate equipment designed to maintain a preset flow, level, temperature, pressure or other water quality parameter. In general, should the control system fail to maintain the identified process parameter within the operator or system specified deadband for longer than a preset time period (Supervisor adjustable default shall be as nominated within the specific control section and/or the project alarm table), a process warning shall be generated by the PLC and displayed at the HMI. In specific instances (as defined in the Part 3 detailed control descriptions), should the condition persist beyond a second preset time delay, a critical process alarm shall be generated. Additional system response shall be as defined in the specific control section.

R. VFD Control Coordination: In general, VFD operating parameters critical to proper drive operation will be configured at the drive. The PLC control program will be developed to support this arrangement.

1. Where a start delay timer has been set at the pump VFD, the PLC shall be programmed to account for pump start delay in the re-start logic (and fail-to-respond logic) following issue of pump stop command or unexpected pump stop. Where possible the start delay timer shall be displayed at the HMI.

2. It should be anticipated that the VFD of any given pump may include a custom configuration that does not necessarily support operation over the entire speed range. The PLC speed control signal (as generated by logic controller or operator entered setpoint) shall be ranged 0 to 100% of maximum and output proportionally from 4-20 mA. The VFD will manage the received signal over its actual configured operating range.

3. For all VFDs, the ramp rate (starting and stopping) shall be as set at the VFD. The PLC PID controller (as applicable) will be tuned to take into account the final VFD ramp rate.

S. Auto Rotation Logic: Where referenced in the detailed controls section, the start sequence for a system of pumps or other equipment may be automatically established by the PLC or manually established by an authorized Operator.

1. PLC Auto Sequencing: In auto sequencing mode, the equipment start sequence will be automatically rotated by the PLC based on runtime values. Pump runtimes will be continuously compared. Should two or more runtime meters register runtime hours within a +/- 1hr deadband (Supervisor adjustable), the runtimes will be considered equal and the auto start sequence will default to the numerical order of the equipment in question (i.e. Pump No.1 will be selected to precede Pump No.2 under this runtime comparison scenario). When pump runtimes exceed the deadband limit, the start sequence will be automatically updated. However, pump operation will not normally be impacted by a start sequence change (in Auto or Manual sequencing mode): pump start/stop re-order will be applied as a normal function of pump Cascade start/stop operation unless specifically noted otherwise in the Part 3 detailed control descriptions. Auto PLC rotation may also be suspended by an authorized Operator via the HMI and the pump start sequence manually selected by the operator by means of an HMI pump start selection matrix.

   a. Override Auto Sequencing Runtime Comparator: An override sequencing runtime comparator will be provided and made adjustable by authorized Operator (default = 72hrs). Under auto sequencing mode, should the pump(s) remain in continuous operation for a period greater than the preset runtime comparator, the controller logic will auto cycle the pumps to match the current pending start sequence. For forced rotation, the new pump will always be started and confirmed running prior to shutdown of the current in-operation pump (unless specifically noted otherwise in the Part 3 detailed control descriptions).

2. Operator Manual Sequencing: An authorized operator may manually establish the start sequence for a system of equipment by means of a matrix selection chart at the associated system HMI control screen. For manual start sequence entry, the operator will be required to enter a start position next to each equipment number. The selection interface will be programmed with a means of directing the PLC to accept or cancel the entered start sequence. Once the Operator has completed the

start sequence, the PLC must be directed to accept the sequence in order for the entries to be written to the appropriate active PLC registers. Directing the PLC to cancel will clear all proposed entries. Submitted start sequences containing duplicate and/or invalid entries will be automatically rejected and not written to the active PLC registers (thereby retaining the original start sequence). Until the start sequence modifications are accepted, the PLC will ignore all unaccepted start sequence modifications and continue to operate equipment based on the current start sequence.

T. Bumpless Remote Auto to Remote Manual Transition: Changing the HMI control status of PLC controlled equipment from Remote Auto to Remote Manual shall be a bumpless operation. Therefore, a VFD operating in Auto mode at 78% of maximum speed shall maintain that speed and remain in operation when switched from Auto to Manual control at the HMI. A similar adjustment to a modulating valve actuator should display identical behavior.

U. Flow Signal Dampening: Various flow meters are used to measure the rate of flow of water, air and chemicals throughout the facility. The PLC shall be programmed to dampen the incoming analog signal. This shall be accomplished by calculating a running average of the flow signal over 5-second periods (nominal setpoint) using a data sample rate of 0.5 seconds. The means for a supervisor to enable/disable this function and adjust the sampling period (fixed options of 5-sec, 10-sec and 15-sec) at the HMI shall be provided. Refer to individual Appendix sections for specific application.

V. Out of Service: The control system shall have the capability to assign an “Out-of Service” tag to equipment monitored by the control system. During extended periods of maintenance and/or repair, an operator may make such an assignment so as to suppress associated alarms and inhibit HMI/DCS control functions.

Note: normal “lockout / tag-out / check-out” procedures will need to be followed with the field equipment and associated electrical feeds.

W. Control System Historian: The System Integrator shall register the redundant SCADA Server (as identified on the Control Network Architecture Drawings) with the site Historian and configure the server to historically collect the analog, event and alarm data collected at the active SCADA Server. With loss of communication to the active SCADA server, the Historian shall automatically engage the redundant server pending auto fail-overactive status promotion. In the event of communication loss with both SCADA Servers, the Historian shall automatically backfill the historical database, in chronological order once communications are re-established with an active SCADA Server.

1. The Historian shall be configured to collect (pull) data from the active SCADA Server using standard OPC calls and is intended to be the master repository of all plant control system historical data. (Refer to Specification Section 40 95 20-2.5.G for additional functional requirements.) Each SCADA Server shall have an Historian OPC module installed (and identically configured), a uniquely identified OPC server configured, and data collection buffering services activated. By default, the primary SCADA Server Historian OPC client interface service shall be active and the secondary SCADA Server Historian OPC client interface service shall be inactive.

In the event the primary SCADA Server fails or the OPC service fails, the secondary SCADA Server Historian OPC client interface service shall be immediately activated (Note: this procedure may require minor code and/or script development with the software manufacturer by the System Integrator). When the primary SCADA Server recovers, the secondary SCADA Server Historian OPC client interface service shall be immediately de-activated (by means of customized code/scripting developed by the System Integrator). In the event communications are lost with the Historian, the active client interface shall be configured to buffer SCADA collected data until a SCADA server connections recover (default buffer size shall be set to accommodate up to 3 months' worth of data based on the project required data collection frequency).

2. Once the Historian server is installed and configured, the System Integrator shall be responsible for verification of communication connection stability/reliability, confirmation of required data backfill and collection and complete test of the data collection redundancy scheme with the Engineer as witness. Customized reports and trends shall be developed by the System Integrator as detailed in Specification Section 40 95 20.

X. Control Philosophy Refinement: It shall be understood that some refinement and/or minor modification of the control philosophy will be necessary over the course of the project as part of the control system configuration and programming work. Forums for informal discussions and clarifications have been provided in these documents. They include the Pre-submittal Conference, Graphics/Reports Development Workshops, Factory Testing, Field Development Phase and Startup. Note: All timer, level, position, analysis, pressure, temperature and flow rate values noted within the control philosophy sections are provided for reference only and are subject to refinement based on system testing and final construction.

1. Where the control philosophy sections reference control screens to be developed, final control screen development will be subject to the requirements of Specification Section 40 95 20-3.3 and the production agreements reached during the project Graphics/Reports Development workshops.

PART 3 -- EXECUTION

3.01 DETAILED CONTROL PHILOSOPHY SECTIONS

The following section describes the high-level preliminary control descriptions for the CASSF with overarching control modes defined above in Parts 1 and 2 of this specification.

A. Primary Influent and Primary Effluent Pumping

1. Reference Drawings:

   I-31

2. System Description:

Two constant-speed self-priming horizontal end suction pumps convey primary influent (aerated grit tank effluent) and primary effluent (primary sedimentation tank effluent) from the existing PLWTP to the CASSF blending tank. An Operator entered blending ratio of primary influent to primary effluent is achieved via modulating valves on the return line of each pump discharge. The valves modulate to achieve the desired blending ratio of primary influent and primary effluent feed at the blending tank, with feedback control from the respective pump discharge flowmeters. Additionally, the discharge flowmeters will also serve to determine to total influent flow to the CASSF.

Primary influent and primary effluent pump status and control will be established at the CASSF main PLC. Each pump will be equipped with a local control station panel providing pump controls and indication to support local operation. Pump motor overload and suction/discharge pressure switches will be interlocked directly at the starter with mechanical shutdown timers and statuses reported at the CASSF HMI.

3. Control Descriptions:

   a. Local Manual Control

      1) The primary influent and effluent pumps may be manually operated at the MCC when in LOCAL mode or if override Emergency Stop at the LCS is activated.

      2) The primary influent and effluent motor-operated valves (MOV's) may be manually operated at the actuators when in LOCAL mode.

   b. Local Auto Control

      1) None

   c. SCADA Manual Control

      1) The operator can start and stop the pumps from the HMI when the pumps are operating in SCADA Control Mode.

      2) The operator can open, stop, and close the MOV's from the HMI when the valves are operating SCADA Control Mode.

   d. SCADA Auto Control

      1) Once initiated, the pumps shall run continuously.

      2) The flow controls valves on the return line of each pump shall modulate to maintain the Operator entered blending ration setpoint of primary influent to primary effluent.

      3) Additionally, the operator shall be able set individual pump flow setpoints.

B. Blending Tank

1. Reference Drawings:

   I-33

2. System Description:

   The PLWTP primary influent and primary effluent is discharged into the blending tank, located at the CASSF. The blend tank is equipped with a non-contact radar level transmitter and back-up high-high level switches. The tank will include dedicated constant speed mixing pump that will run continuously, once initiated.

   The mixing pump status and control shall be established at the CASSF main PLC. The pump will be equipped with an E-stop. Pump motor overload and blending tank low-low level and pump discharge pressure switch will be interlocked directly at the starter with mechanical shutdown timers and statuses reported at the CASSF HMI.

3. Control Descriptions:

   a. Local Manual Control

      1) The blending tank mixing pump may be manually operated at the MCC when in LOCAL mode or if override Emergency Stop at the LCS is activated.

      2) The BNR Feed Pump may be manually operated and have its speed controlled when in LOCAL mode or if override Emergency Stop at the LCS is activated.

   b. Local Auto Control

      1) None

   c. SCADA Manual Control

      1) The operator can start and stop the pumps and control the speed of the BNR Feed Pump from the HMI when the pumps are operating in SCADA Control Mode.

   d. SCADA Auto Control

      1) The blend tank mixing pump shall operate continuously, once initiated.

      2) The BNR Feed pump shall operate to maintain an Operator enter BNR feed flow setpoint. A PID loop shall be used to adjust the pump speed in order to maintain the flow setpoint with feedback from the discharge flowmeter.

C. Self-Cleaning Strainers

1. Reference Drawings:

   I-32, I-34

2. System Description:

   Once placed in service, the self-cleaning strainers will continuously operate to remove screenings from the influent and a small portion of RAS. The strainers will backwash based on an interval / timer cycle. Detection of a high differential pressure condition will override / activate the clean cycle, which will continue until the clean cycle timer has expired and the high-pressure condition is cleared. Should the high differential pressure condition persist after wash cycle completion, a new wash cycle will be initiated and repeated until the high-pressure condition is cleared or system fault is detected. Strainer outlet MOV's are to continuously open while strainers are in operation. A low flow switch will confirm backwash operation.

   A strainer discharge (or common strainer drain) low flow condition will cause a strainer system fault and end clean cycle.

3. Control Descriptions:

   a. Local Manual Control

      1) The self-cleaning strainers may be manually operated at the VCP when in HAND mode or if E-Stop is activated at the Strainer VCP.

      2) The Strainer Outlet MOV's may be manually operated when in LOCAL mode or if override Emergency Stop at the VCP is activated.

   b. Local Auto Control

      1) By Vendor

   c. SCADA Manual Control

      1) The operator shall be able to initiate a backwash cycle from the when operating in SCADA Control Mode.

      2) The operator can open, stop, and close the strainer outlet (and common strainer drain) MOV's from the HMI when the valves are operating in SCADA Control Mode.

   d. SCADA Auto Control

      1) No applicable.

D. BNR System

1. Reference Drawings:

   I-41, I-42, I-43, I-44

2. System Description:

The bioreactor is the first step in the secondary treatment process consisting of anoxic zones and aerated zones to promote biological treatment of the primary effluent. The bioreactor will be configured as a MLE process, with a two-stage anoxic zone for nitrogen removal using carbon from the primary effluent. The anoxic zones are preceded by DeOx zone and followed by an aerobic zone.

The process aeration blowers will be required to operate under all plant operating modes. When permitted to operate, the vendor PLC will manage the blowers in duty/standby fashion to maintain an operator-entered pressure setpoint. The aeration control valve will operate to maintain an operator-entered fixed flow setpoint (as confirmed by the summed readings of the air flow meters) OR an operator entered DO setpoint (as measured by the aerobic tank in situ DO probe). Additionally, the option for Ammonia-based aeration control (ABAC) will also be included.

To further support the process, chemicals are added to help sustain biological growth. Chemical additives include:

- Sodium Hydroxide: for alkalinity compensation (through adjustment of pH) to support nitrification

- Carbon Source (acetic acid): to support microbial growth and removal of nitrates during denitrification in anoxic zones

A variable-speed internal mixed liquor return pump returns mixed liquor from the end of the aeration tank to the DeOx tank. The IMLR pump status and control will be established by the vendor PLC. Pump discharge high pressure and motor high temperature will be interlocked directly at the drive with mechanical shutdown timers and statuses reported at the CASSF HMI.

From the aerobic tank, the submersible IMLR pump will work to return nitrate (based on a percentage of the influent flow) to the DeOx tank. Wasting will be intermittently achieved via modulating gate at the end f the aeration tank at an Operator adjustable frequency and duration.

A variable-speed ML pump transfers mixed liquor to the membrane tanks. The ML pump transfers the biomass and other undissolved solids to the membrane basins for filtration. The ML pump will operate continuously at an operator-specified percentage of the MBR filtrate flow.

IMLR, and ML pump statuses and control will be established by the vendor PLC. Pump motor overload and discharge pressure switches will be interlocked directly at the starter with mechanical shutdown timers and statuses reported at the vendor OIT and CASSF HMI.

3. Control Descriptions:

   a. Local Manual Control

1) The DeOx and Anoxic Zone Mixers may be manually operated at the MCC Starters when in LOCAL mode or if override Emergency Stop at the LCS is activated.

2) The WAS Box motor-operated gate may be manually operated at the Valve Actuator when in LOCAL mode.

3) The ML and IMLR Pumps may be manually operated and speed-controlled at the VFD's when in LOCAL mode or if override Emergency Stop at the LCS is activated.

4) The Aeration Blowers may be manually operated and speed-controlled at the VCP OIT when in LOCAL mode or if override Emergency Stop at the VCP is activated.

5) The Aeration Blower Process Flow Control Valves may be manually operated and positioned at the valve actuator when in LOCAL mode.

b. Local Auto Control

1) By Vendor

c. SCADA Manual Control

1) The operator can start and stop the Mixers from the HMI when the mixers are operating in SCADA Control Mode.

2) The operator can open and close the WAS Box motor-operated gate and Plant Utility Water Injection Solenoid Valve from the HMI when in SCADA Control Mode.

3) The operator can start, stop, and adjust the speed of the ML pump and IMLR Pumps from the HMI when in SCADA Control Mode.

4) The operator can start, stop, and adjust the speed of the Aeration Blowers from the HMI when in SCADA Control Mode.

5) The operator can open, stop, and close the Aeration Blower Process Flow Control Valves from the HMI when in SCADA Control Mode.

d. SCADA Auto Control

1) The mixers shall operate while the BNR tank is above the operating level.

2) The ML Pump shall operate continuously, and its speed setting shall be adjusted in order to maintain a MBR filtrate flow setpoint.

3) The IMLR Pump shall operate intermittently at an operator-adjustable frequency and its speed setting shall be adjusted in relation to an influent flow measurement.

4) The Aeration Blower Process shall operate to maintain the operator entered pressure setpoint.

5) Each aerated zone will have two operating modes: DO Control (primary control mode) and Ammonia-based Aeration Control

6) DO Control (primary control mode):

   a) Basin DO Control: Auto modulation of the aeration discharge valves to achieve an Operator entered DO setpoint for a given zone, as measured against an average of all the basin DO analyzers or an Operator selected basin zone DO analyzer.

   b) Fixed Flow Setpoint: Operator manual assignment of a flow setpoint.

7) Ammonia-based Aeration Control (ABAC): Auto modulation of the aeration discharge valves to achieve Hach Real Time Control Ammonia Based Aeration Controller specified DO setpoint for a given zone. Hach Real Time Control with Ammonia Based Aeration Controller specifies a setpoint using instrumentation and programming to optimize the aeration system. Instrumentation will communicate TSS, DO, NH3, temperature, pH, and flow to the Hach Ammonia Based Aeration Controller for purposes of optimization the aeration system while achieving nitrification goals.

8) The operator shall be able to adjust the MBR Filtrate flow, Anoxic and Aerobic Aeration Process flows, and Aerobic Zones 1 and 2 Dissolved Oxygen concentration setpoints.

E. MBR System

1. Reference Drawings:

I-51, I-52, I-53, I-54, I-55, I-61, I-62

2. System Description:

With operator initiation of an MBR system membrane basin, the associated variable-speed ML pump will be called by the vendor controller to operate and provide flow to the membrane basin. Filtered product (i.e., MBR filtrate) is pulled through the membrane filters and discharged to the MBR filtrate tanks by the MBR variable-speed filtrate pump. The RAS pump will operate continuously at an operator-specified percentage of the MBR filtrate flow. The MBR filtrate pump shall not operate until the corresponding RAS pump is confirmed operational based on the RAS flow setpoint (with respect to the filtrate flow setpoint) and the basin air scour blower is confirmed operational based on detection of minimum air flow. While the level in the MBR System Membrane tank remains viable and Aerobic Zone 2 Level is above Low-Low level, the MBR system will remain in service once initiated until the operator calls the system to stop or a fault condition is detected (requiring system reset and restart by the operator).

The MBR system membranes will require regular cleaning as a function of normal operation. Depending on the MBR system supplier, membrane cleaning may be achieved through membrane backwashing or membrane relaxation.

3. Control Descriptions:

   a. Local Manual Control

      1) The MBR System Air pneumatically-operated valve (POV) may be manually operated when in LOCAL mode.

      2) The MBR System Filtrate/Backwash and RAS Pumps may be manually operated and have their speeds controlled at the MCC when in LOCAL mode or if override Emergency Stop at the LCS are activated.

      3) The RAS Pump Discharge Flow Control Valve may be manually operated and modulated at the valve actuator when in LOCAL mode.

      4) The MBR Air Scour Blower VFD may be manually operated and speed-controlled at the MCC when in LOCAL mode or if override Emergency Stop at the LCS is activated.

      5) The Air Vent MOV may be manually operated at the valve actuator when in LOCAL mode.

      6) The Pathogen Pumps may be manually operated and have their speeds controlled at the MCC when in LOCAL mode or if override Emergency Stop at the LCS are activated.

      7) The AWP Feed Pump may be manually operated and have its speed controlled at the MCC when in LOCAL mode or if override Emergency Stop at the LCS is activated.

   b. Local Auto Control

      1) By Vendor

      2) The MBR System Air pneumatically-operated valve shall operate while the MBR System Membrane Basin is below a high level setpoint.

      3) The RAS pump will operate continuously and at a speed setting at an operator-adjustable percentage of the MBR Filtrate Flow and while the BNR Tank is below a high level setpoint.

      4) The MBR System Filtrate/Backwash pump shall not operate until both the RAS Pump Discharge flow reaches a setpoint and the MBR Air Scour Blower is running. The MBR System Filtrate/Backwash pump will operate continuously at a speed setting in order to maintain flow setpoints to the Pathogen Test and MBR Filtrate Tanks, and until the prior RAS Pump and

Air Scour system finish their cycles or the Pathogen Test and MF System Feed Tanks reach a high setpoint.

5) The MBR Air Scour Blower shall run continuously upon detection of ambient air and its speed setting shall be adjusted to maintain the level setpoint of the MBR System Membrane Basin.

6) The Air Vent MOV shall run continuously unless the Air Scour Blower is stopped.

7) The Pathogen Pumps will operate continuously and at a speed setting to maintain the pump discharge flow setpoints and while the Pathogen Test Tanks are above low level setpoints.

8) The AWP Feed Pump will operate continuously and at a speed setting to maintain the pump discharge flow setpoint and while the pump suction pressure is above a low setpoint.

9) The operator shall be able to adjust the RAS Pump Discharge, Pathogen Pump and AWP Feed Pump Discharge, and MBR System Filtrate/Backwash Pump flow setpoints.

10) The operator shall be able adjust the Pathogen Test Tank, MBR Filtrate Tanks, and MBR System Membrane Basin level setpoints.

c. SCADA Manual Control

1) The operator can control the valve position of the MBR System Air pneumatically-operated valve from the HMI when the POV is in SCADA Control Mode.

2) The operator can start, stop, and adjust the speed of the MBR System Filtrate/Backwash and RAS Pumps from the HMI when the pumps are operating in SCADA Control Mode.

3) The operator can control the valve position of the RAS Discharge valve from the HMI when the POV is in SCADA Control Mode.

4) The operator can start, stop, and adjust the speed of the MBR Air Scour Blower from the HMI when the blower is operating in SCADA Control Mode.

5) The operator can open and close the Air Vent MOV from the HMI when the valve is operating in SCADA Control Mode.

6) The operator can start, stop, and adjust the speed of the Pathogen Pumps from the HMI when the pumps are operating in SCADA Control Mode.

7) The operator can start, stop, and adjust the speed of the AWP Feed Pump from the HMI when the pump is operated in SCADA Control Mode.

d. SCADA Auto Control

1) Not applicable.

F. Preformed Chloramines

1. Reference Drawings:

I-121, I-131, I-136, I-137, I-141, I-142, I-147, I-151, I-152, I-156, I-157, I-161, I-162

2. System Description:

Chloramines are required to control biological growth in the MBR filtrate tanks and pipe loops as well as control fouling in the membrane treatment systems (MF and RO). The preformed chloramines process involves dosing caustic, sodium hypochlorite, and ammonium sulfate into a side stream of RO permeate. This minimizes the formation of disinfection byproducts which form in higher quantities when the chemicals are made in the main process flow (which contains organic matter). Preformed chloramines will be dosed at three locations at the CASSF using dedicated metering pumps: MBR filtrate prior to the MBR filtrate tanks, MF feed (Murray Train), and RO feed (San Vicente Train). The dosing point on the MF feed is required to dose chloramines for the MF and RO systems on the Murray Train since residual chloramines will be quenched prior to the BAC system. The dosing point on the San Vicente Train will be used if the chloramine residual is too low after the pipe loop and needs to be supplemented prior to the RO system.

Separate RO permeate carrier water pumps will provide a fixed flow of RO permeate from the preformed chloramine carrier water tank to each of the preformed chloramines dosing skids. Each skid will also have separate metering pumps for caustic, sodium hypochlorite, and ammonium sulfate. The flow rate of the chemical metering pumps will be flow paced and based off an operator setpoint, and will be trimmed based on the residual chloramine concentration in the main process flow , as determined by total chlorine measurements. In the event that the RO permeate side-stream flow rate goes to zero, the chemical metering pumps will stop to prevent the mixing of chemicals without carrier water.

3. Control Descriptions:

a. Local Manual Control

1) The RO Permeate Carrier Pumps may be manually operated and have their speeds controlled at the MCC VFDs when in LOCAL mode or if override Emergency Stops at the LCS are activated.

2) The Chemical Dosing Pumps (Liquid Ammonium Sulfate, Sodium Hypochlorite, and Sodium Hydroxide) may be manually operated and have their speeds controlled at the MCC VFDs when in LOCAL mode or if override Emergency Stops at the LCS are activated.

3) The Metering Pumps may be manually operated and have their speeds

controlled at the MCC VFDs when in LOCAL mode or if override Emergency Stops at the LCS are activated.

4) The Chemical Transfer Pumps (Liquid Ammonium Sulfate, Sodium Hypochlorite, and Sodium Hydroxide) may be manually operated at the MCC when in LOCAL mode or if override Emergency Stops at the LCS are activated.

b. Local Auto Control

1) By Vendor

c. SCADA Manual Control

1) The operator can start, stop, and vary the speed of the RO Permeate carrier pumps from the HMI when the pumps are operating in SCADA Control Mode.

2) The operator can start, stop, and vary the speeds of the chemical dosing pumps from the HMI when the pumps are operating in SCADA Control Mode.

3) The operator can start, stop, and vary the speeds of the metering pumps from the HMI when the pumps are operating in SCADA Control Mode.

4) The operator can start, stop, and vary the speeds of the chemical transfer pumps from the HMI when the pumps are operating in SCADA Control Mode.

d. SCADA Auto Control

1) The RO Permeate carrier pumps shall operate continuously and at a speed setting to maintain previously set pump discharge flow setpoints and while the PFC Carrier Water Tank level is above a low setpoint.

2) The chemical dosing pumps shall operate continuously and at a speed setting to maintain the chloramine concentration at the corresponding dosing location (MBR filtrate, Murray Train MF feed, or San Vicente Train RO feed) and while the Chemical Storage Tank levels are above low setpoint and the RO Permeate carrier pump discharge flow is not at a no-flow condition

3) The operator shall be able to adjust all of the aforementioned Pump Discharge Flow Setpoints and Storage and PFC Carrier Water Tank Level Setpoints.

G. Ozone

1. Reference Drawings:

I-71, I-72, I-73, I-74, I-76

2. System Description:

   The ozone system provides pathogen log removal credit and oxidizes organic contaminants to facilitate downstream treatment by the BAC filters. Compressed air will be provided to the PSA oxygen generation system, which provides the feed gas to the ozone generation system. A single ozone generator will be provided to convert the incoming oxygen feed gas from the PSA system to create a gas flow consisting of approximately 10% ozone. The ozone gas will be fed to one of two ozone dissolution systems: the side stream injection system or the fine-bubble diffuser system. The side stream system will consist of a side stream pump that will divert a portion of the ozone feed flow to the venturi injector where ozone gas will be introduced. The fine-bubble diffuser system will include two parallel dissolution columns, each with a single dome diffuser that will be supplied with ozone gas. The fine-bubble diffuser system will be the primary ozone dissolution system used during testing, with the side stream injection equipped as standby in the event that the fine-bubble system fouls and cannot sustainably operate. The ozonated flow will then be routed to a single serpentine pipeline contactor to achieve the desired CT. One sodium bisulfite dosing location is included in the ozone influent to provide operators with the ability to quench residual chloramines prior to the ozone system. An additional sodium bisulfite dosing location is provided in the ozone contactor effluent to quench residual chloramines (if upstream dosing location is not used) and residual ozone to protect the biology of the BAC filters. The sodium bisulfite dosing pump will be flow paced and the dose will be manually entered by operators. High and high-high alarms for ORP on the ozone feed (AE/AIT 812) and ozone effluent (AE/AIT 747) will be set by a user-inputted max ORP value to alert operators when the SBS dosing must be changed.

   The primary ozone control strategy will be based on achieving 1-log reduction of Cryptosporidium oocysts. Ozone residual will be measured at three locations along the pipeline contactor and used to calculate a CT and the corresponding Cryptosporidium LRV. The ozone dose will be trimmed based on the calculated Cryptosporidium LRV. The target CT for 1-log Cryptosporidium removal is 4 mg-min/L at 20 C (the expected minimum water temperature) and 1.55 mg-min/L at 30C (the expected maximum water temperature). A secondary ozone control strategy will be the use of the mass ratio of ozone to TOC (O3:TOC). With this strategy, the ozone dose will be trimmed based on measurements of influent TOC concentration. The target setpoint O3:TOC ratio will vary between 0.8 to 1.3.

3. Control Descriptions:

   a. Local Manual Control

      1) The Ozone Direct Injection Pump may be manually operated at the MCC when in LOCAL mode or if override Emergency Stop at the LCS is activated.

      2) Additional control per Ozone Vendor Package System

b. Local Auto Control

1) By Vendor

c. SCADA Manual Control

1) The operator can start and stop the Side Stream Pump from the HMI when the pump is operating in SCADA Control Mode.

2) The operator can modulate the position of the Side Stream Pump Discharge Flow Control Valve from the HMI when the valve is operating in SCADA Control Mode.

3) The operator can modulate the positions of the MBR Filtrate Storage Flow Control Valves from the HMI when the valves are operating in SCADA Control Mode.

d. SCADA Auto Control

1) The side stream pump discharge flow control valve shall maintain a flow setpoint.

2) The MBR Filtrate Storage flow control valves shall maintain a flow setpoint.

3) The operator shall be able to adjust Ozone Vendor System Packaged process setpoints.

Ozone Product Pump (I-74) controls description is missing. This pump controls either need to be described in this section or the BAC Filter.

Ozone destruct on I-76 will be controlled based on a target vacuum or blower scfm set by an operator adjustable setpoint on Ozone HMI. Ozone off-gas stream to destruct will be monitored for % wt Ozone. Ozone destruct exhaust will be monitored for ppm of Ozone. An operator adjustable setpoints for Destruct Exhaust Ozone High (0.1 ppm) and High High (0.3 ppm) will be used for alarms. In the event of High High alarm for an operator adjustable delay (30 sec) the Ozone Generator will stop producing ozone and display a Critical Alarm that will be sent to the CASSF PLC and HMI.

H. BAC Filter

1. Reference Drawings:

I-81, I-82, I-83, I-84

2. System Description:

The BAC filters provide removal of dissolved organics and suspended solids from the ozone effluent by a combination of biological and physical filtration processes. During filtration mode, the flow to each filter is distributed by influent weirs and flows by gravity downward through the filter bed and into the BAC filtrate tank. A small

pump will pump the BAC effluent from the BAC filtrate tank to the MF or San Vicente RO feed. The excess water in the BAC filtrate tank will overflow into the BAC filtrate overflow tank, from there, the BAC backwash supply pump, will pump the filtrate overflow into the BAC backwash supply tank. Each filter will be equipped with a filter effluent valve that modulates to maintain a fixed water level above the media. During the filtration cycle, the filter bed accumulates head loss, the effluent valve will gradually open in response, to mitigate the effect of head loss. Differential pressure gauges will be installed to monitor head loss.

Backwashing of the filters can be initiated manually, automatically by head loss, or automatically by time. The backwash sequence consists of draining to a preset water level above the media, air scour (provided by a single air scour blower), then backwash. A single variable speed backwash pump will pump BAC effluent from the BAC backwash supply tank to the filter being backwashed. The variable-frequency drive on the backwash pump will enable the backwashing rate to be varied. Analyzers will include TOC (combined effluent), UVT (combined effluent), turbidity (influent and combined effluent), and differential pressure (filter 1 and filter 2), which will be displayed on the PLC along with backwash, and filter effluent flow rates.

3. Control Descriptions:

   a. Local Manual Control

      1) The Influent, Effluent, Waste, Air Scour Inlet, Air Vent, and Backwash Control Valves may be manually operated at the valve actuators when in LOCAL mode.

      2) The BAC Backwash Transfer and BAC Backwash Supply Pumps may be manually operated and have their speeds adjusted at the MCC when in LOCAL mode or if the overriding Emergency Stops at the LCS are activated.

      3) The BAC Air Scour Blower may be manually operated and have its speed adjusted at the MCC when in LOCAL mode or if the overriding Emergency Stop at the LCS is activated.

      4) The Air Vent MOV may be manually operated at the valve actuator when in LOCAL mode.

   b. Local Auto Control

      1) By Vendor

   c. SCADA Manual Control

      1) The operator can open and close the BAC Influent, Effluent, Air Scour Inlet, and Waste Valves from the HMI when in SCADA Control Mode.

      2) The operator can open, stop, and close the Backwash Control Valve from the HMI when in SCADA Control Mode.

3) The operator can start, stop, and vary the speeds of the Overflow Sump and BAC Backwash Supply Pumps from the HMI when the pumps are operating in SCADA Control Mode.

4) The operator can start, stop, and vary the speed of the Air Scour Blower from the HMI when the blower is operating in SCADA Control Mode.

5) The operator can open and close the Air Vent MOV from the HMI when in SCADA Control Mode.

d. SCADA Auto Control

1) The influent valves shall be normally open unless backwashing or faulted.

2) The effluent valves shall be open when the Filter Media level is above a low set point and close when the level is below the low set point.

3) The waste valves are to open during a backwash only and close during all other sequences.

4) The Air Scour Inlet Valves are to open when the air scour blower is running and the Air Vent Valve MOV is open. They are to close only once Air Vent Valve MOV is fully open.

5) The Backwash Control Valves are to open during a backwash/hydraulic bump sequence, and close during all other sequences.

6) The BAC Backwash Transfer Pump is to start and stop based off the level in the BAC Filtrate Overflow Tank. BAC Backwash Transfer Pump is to stop when BAC Filtrate Overflow Tank reaches a low level setpoint or BAC Backwash Supply Tank level reaches a high level setpoint. BAC Backwash Transfer Pump is to start if BAC Filtrate Overflow Tank reaches a high level setpoint.

7) The BAC Backwash Supply Pump is to run at a speed setting to maintain a BAC Backwash Flow setpoint. BAC Backwash Supply Pump is stop when BAC Backwash Supply Tank reaches a low level setpoint. Pump is to start when called to run by the BAC PLC and supply tank is above a permissive level setpoint.

8) The Air Scour Blower shall run continuously when called to run by BAC PLC and at a speed setting determined by the Blower Vendor. Air Scour Blower is to start and stop during a backwash sequence, as called for by the BAC PLC and determined by the BAC system supplier.

9) The operator shall be able to adjust the following setpoints:

- Operating water level above the media
- Backwash Supply Flow Rate

- Air Scour Duration
- Air scour cutoff level
- Backwash duration at Low Rate
- Backwash duration at High Rate
- Low Rate BW Flow
- High Rate BW Flow

I. Membrane Filtration

1. Reference Drawings:

   I-91

2. System Description:

   The MF system removes suspended solids and turbidity, provides log removal credits for Giardia and Cryptosporidium, and polishes the BAC effluent prior to treatment by RO. It will consist of two trains that include one self-contained membrane module each. A single universal skid that receives flow from an MF feed tank will contain both trains. An automatically backwashing strainer on the overall MF feed will remove solids to protect the membranes. PDTs will be performed on both modules daily to verify membrane integrity and validate log removal credits. Indirect integrity monitoring will be accomplished through continuous filtrate turbidity monitoring with a turbidimeter for each train as well as continuous adenosine triphosphate monitoring in the MF influent and filtrate. A pressure gauge will measure the feed pressure to ensure that the maximum allowable value is not exceeded. Backwashes will be performed multiple times per day at regular intervals to remove accumulated solids. There may be chemically enhanced backwashes depending on the membrane module manufacturer. A CIP will occur occasionally to remove fouling and restore membrane specific flux.

   There will be several operational modes for the MF system: (1) Forward Flow Mode—Normal operation where each module will be producing filtrate for conveyance to the RO feed tank. Feed water from the BAC process will pass through the automatic backwashing strainer prior to the membranes. (2) Backwash Mode—Filtrate is pumped from the RO feed tank through the MF membranes in the reverse direction compared to Forward Flow Mode. Depending on the module manufacturer, an air scour will also occur to help remove solids that have collected on the feed side of the membrane surface. (3) Enhanced Flux Maintenance/Clean-in-Place Mode—A chemical cleaning solution will be heated in the CIP tank and pumped through the membrane modules with periods of recirculation and/or soaking. The modules will then be rinsed with filtrate before returning to Forward Flow Mode. Details of the cleaning procedures will differ between module manufacturers. (4) PDT Mode—During a PDT, a membrane module will be isolated and tested to verify membrane integrity and log removal credit. They will be pressurized with air from the

compressed air system, and they will neither receive nor produce any water during this time.

The numeric pathogen removal goals for the MF system at the CASS-AWP are 4 logs of Giardia and 4 logs of Cryptosporidium. The result of the daily PDTs for each module will be used to assess log removal values. The measured pressure decay rate must be below the system-specific upper control limit for a module to pass the test. Additionally, the minimum applied air pressure must be able to indicate a 3-µm breach in the membrane. The upper control limit for the PDT will be defined per the LT2ESWTR that indicates a potential breach in the MF membrane if it is exceeded. If a module fails any PDT, it will be retested to verify the results of the first test. If the second PDT is also failed, then the module must be taken out of service for testing and repair. If a module passes the PDT, log removal credits will be calculated based on an equation using the measured pressure decay rate and other environmental parameters. Indirect integrity testing will be required to monitor system performance between PDTs. Accordingly, the filtrate turbidity for each train will be monitored with a frequency of no less than every 15 minutes to ensure that there are no measurements above 0.15 NTU for a period of 15 minutes or longer. If this condition occurs, the corresponding module will be taken out of service and subjected to a PDT separate from the daily PDTs. Adenosine triphosphate will also be monitored at the feed and individual filtrates using an online Hach EZ7300 analyzer because feed turbidity is expected to be less than 0.15 NTU, making turbidity a potentially poor indicator of membrane performance.

3. Control Descriptions:

   a. Local Manual Control

      1) The Backwash Feed and UF Feed/CIP Pumps may be manually operated and have their speeds controlled at the MCC when in LOCAL mode or if override Emergency Stop at the LCS is activated.

   b. Local Auto Control

      1) By Vendor

   c. SCADA Manual Control

      1) The operator can start, stop, and vary the speeds of the Backwash Feed and UF Feed/CIP Pumps from the HMI when in SCADA Control Mode.

   d. SCADA Auto Control

      1) The Backwash Feed Pump shall operate when called to run by the MF PLC, and if the RO Feed Tank is above a low level set point. The pump's speed will vary in order to maintain a discharge flow setpoint.

      2) When in forward filtration mode, the MF Feed/CIP Pump shall operate when called to run by the MF PLC and if the BAC filtrate tank is above a low level setpoint. When in CIP mode, the MF Feed/CIP Pump shall

operate when called to run by the MF PLC and if the CIP Tank is above a low level setpoint. The operator shall be able to adjust the pump discharge flow and other MF System process setpoints.

J. Reverse Osmosis

1. Reference Drawings:

   I-92, I-93, I-94, I-94, I-95, I-96, I-97, I-98, I-99, I-100, I-101, ,I-102, I-103, I-104, I-105, I-106, I-107, I-108

2. System Description:

   The RO system removes dissolved constituents from the influent water to achieve salinity control and demonstrate pathogen log removal credits for the CASS-AWP. Four separate RO trains will be installed at the CASSF. Three RO technologies will be used for the Murray Train: conventional RO, flow reversal RO, and closed-circuit RO. A RO feed tank will be used to feed the Murray RO trains. A conventional RO will be used for the San Vincente train and feed water to it will be provided from either the ozone system feed pump or the MF feed pump from the Murray train. Applicable to all RO systems RO trains, water is first conditioned with sulfuric acid and antiscalant to control scaling. Chemical dosing is based on RO feed pH target and antiscalant dose (i.e., mg/L). It is then pre-treated with cartridge filters to protect the RO membranes against damage by large particles. Finally, the water is pressurized and passed through RO membrane elements to produce permeate (i.e., product water). Each of the RO technologies has the following operating modes:

   Production mode: during production mode, the RO skids are online and producing permeate. The CASSF operator will select a permeate flow value and recovery. Each RO system will determine the correct feed flow and feed pump speed to achieve the operator selector values and operate at constant permeate flow. Startup of all RO systems will be interlocked to other processes and require permissiveness from other systems. The following provides additional details of the different RO technologies during production mode:

   Conventional RO: the conventional RO at CASS-AWP will have three - stages with one - transfer pump, one - feed pump, and two - interstage booster pumps. The interstage booster pumps are used for flux balancing for Stages 2 and 3. Interstage setpoints will be selected by operator to achieve desired flux balancing. The concentrate flow control valve will modulate to maintain recovery setpoint.

   Flow Reversal RO: the flow reversal RO at CASS-AWP will have four - stages and will continuously reverse flow in the pressure vessels and rotate blocks such that trailing stages get used as a lead stage. The rotation of flow and block rotation will occur automatically as part of the flow reversal skid-mounted package. The four--stage flow reversal RO skid will have three - interstage pumps for Stages 2, 3, and 4. Interstage setpoints will be selected by operator to achieve desired flux balancing. The concentrate flow control valve will modulate to maintain recovery setpoint.

Closed circuit RO: the closed-circuit RO system is a semi-batch process that alternates between two modes when in production: closed-circuit cycle mode and plug flow flush mode. During closed-circuit cycle mode, the feed flow and permeate flow are equal such that brine flow is zero and a feed-brine recirculation pump is used to decouple cross-flow velocity from the system flow. Feed pressure as well as salt concentration of the feed-brine stream increases over the length of the cycle. The closed-circuit cycle typically lasts between 5 and 30 minutes depending on the chosen volumetric recovery and feed water quality. Once the operator selected volumetric recovery setpoint is met, the closed-circuit cycle will transition to plug flow flush mode. During this mode, the recirculation pump slows down and the brine valve is opened in to flush the system with fresh feed-brine flow. The duration of the flush is based on a displacement volume chosen by the operator. The transition between the closed-circuit and plug flow flush modes will occur automatically as part of the CCRO skid-mounted package.

Flush mode: The flush mode is triggered whenever a RO train undergoes a shutdown. During this mode, permeate water that contains no free chlorine is pumped from the RO permeate tank using the RO permeate flush pump and to the RO train requiring a flush. If multiple RO trains require a RO flush, the flushes will occur sequentially, one RO train at a time. Operator will have the ability to select determine flush order in such events. The RO flushes will occur automatically as part of CASS-AWP's control strategy. The operator shall have the ability to initiate an automatic flush sequence through SCADA.

Clean-in-Place mode: Periodic CIP procedures will need to take place to restore membrane permeability. During this mode, either a high or low pH cleaning solution will be recirculated and used to soak the RO train being cleaned. A CIP is a manual process and is only initiated once the RO train has been taken offline, flushed of feed water, and valved for CIP procedure. The CIP skid includes a CIP tank and immersion heater to heat the cleaning solution. Once the CIP is complete the solution must neutralized prior to discharge. In addition, the RO train must be flushed with RO permeate before it can be brought back online for production.

One of the objectives of the RO trains is to demonstrate pathogen removal. Pathogen removal through RO is typically monitored through the removal of conservative surrogate parameters. Traditional surrogates such as EC and TOC are used to demonstrate approximately 1.5 and 2.0 LRV, respectively. The RO system LRV will be calculated using the following equation from the Environmental Protection Agency (EPA) Membrane Filtration Guidance Manual:

$$LRV=\log(C_f)-\log(C_p)$$

Where the parameters are defined as follows:

- LRV = log removal value demonstrated during challenge testing or sampling of naturally occurring constituent
- Cf = feed concentration of the challenge constituent or naturally occurring constituent (number or mass / volume)

- Cp = filtrate concentration of the challenge constituent or naturally occurring constituent (number or mass / volume)

3. Control Descriptions:

a. Local Manual Control

1) The RO Feed Transfer Pumps may be manually operated at the MCC when in LOCAL mode or if Emergency Stops at the LCS are activated.

2) The RO Feed Transfer Pump Discharge and Flow Flush MOV's may be manually operated at the valve actuators when in LOCAL mode.

3) The CCRO Permeate Pump may be manually operated at the MCC when in LOCAL mode or if Emergency Stop at the LCS is activated.

4) The RO CIP Pump may be manually operated at the MCC when in LOCAL mode or if Emergency Stop at the LCS is activated

5) The CIP Fill Pump may be manually operated and have its speed controlled at the MCC when in LOCAL mode or if Emergency Stop at the LCS is activated.

6) The Flush Pump may be manually operated and have its speed controlled at the MCC when in LOCAL mode or if Emergency Stop at the LCS is activated.

b. Local Auto Control

1) By Vendor

c. SCADA Manual Control

1) The operator can start and stop the RO Feed Transfer pumps from the HMI when the pumps are operating in SCADA Control Mode.

2) The operator can open, stop, and close the RO Feed Transfer Pump Discharge and Flow Flush MOV's from the HMI when the valves are operating in SCADA Control Mode.

3) The operator can start and stop the CCRO Permeate pump from the HMI when the pump is operating in SCADA Control Mode.

4) The operator can start, stop, and vary the speed of the RO CIP pump from the HMI when the pump is operating in SCADA Control Mode.

5) The operator can start and stop, the CIP Fill pump from the HMI when the pump is operating in SCADA Control Mode.

6) The operator can start, stop, and vary the speed of the Flush pump from the HMI when the pump is operating in SCADA Control Mode.

7) The operator can start, stop, and vary the speeds of the chemical transfer pumps from the HMI when the pumps are operating in SCADA Control Mode.

d. SCADA Auto Control

1) The RO Feed Transfer Pumps shall operate continuously while the RO Feed Tank is above an operator-adjustable low level setpoint. Transfer Pumps are to automatically start upon RO Feed Tank reaching high level setpoint.

2) The RO Feed Transfer Pump Discharge MOV shall stay open while the Transfer Pump is running and close when the pump is stopped. MOV shall automatically open upon the start-up of the transfer pump.

3) The Flow Flush MOV shall stay open while the RO Flush Tank is above an operator-adjustable low level setpoint and close once this level is reached. Flow Flush MOV shall automatically open once the RO Flush Tank reaches high level setpoint.

4) The CCRO Permeate Pump shall operate continuously while the CCRO Permeate Tank is above an operator-adjustable low level setpoint. Pump is to automatically start upon the CCRO Permeate Tank reaching high level setpoint.

5) The RO CIP Pump shall operate intermittently by decision of Operator and at a speed set by Operator to target a flow setpoint per RO system. Pump is to start upon operator command and there is permissive from RO CIP Tank level.

6) The CIP Fill Pump shall operate intermittently by decision of Operator and at a speed set by Operator to target a desired volume in the RO CIP tank. Pump is to start upon operator command and there is permissive from RO Flush Tank.

7) The Flush Pump shall operate intermittently and at a speed setting to as determined by the RO System Vendor to reach desired RO flush flow. Pump is to start upon command from respective RO System vendor PLC and there is permissive from RO CIP Flush Tank level, and while the RO Flush Tank level is above an operator-adjustable low setpoint. Only one RO system can be flushed at a time. Operator shall be able to select lead/lag order as well as duration for each RO system permeate flush.

8) The operator shall be able to adjust all of the aforementioned Pump Discharge Flow Setpoints and RO Feed and Flush Tank Level Setpoints.

K. UV/AOP

1. Reference Drawings:

   I-111

2. System Description:

   The UV/AOP treatment at the CASSF will provide pathogen inactivation and removal of chemical compounds in the water through photolysis and advanced oxidation. The design of the UV/AOP treatment is based on achieving the following goals:

   - 6-log pathogen inactivation credit for virus, Giardia, and Cryptosporidium
   - Minimum 0.5-log reduction of 1,4 dioxane
   - NDMA concentration in the product water ≤ 0.69 ng/L (NDMA removal also occurs in O3/BAC and RO)

   To achieve the pathogen removal goal of 6 log inactivation, a UV dose of 276 mJ/cm2 and minimum UVT of 95% are needed. The UV system is designed to operate at UV doses to achieve advanced oxidation, which are significantly higher than the doses required for pathogen inactivation. The design UV doses based on achieving 1,4 dioxane removal and NDMA removal are 850 mJ/cm2 for the Murray train and 1,450 mJ/cm2 for the San Vicente train.

   The San Vicente and Murray trains will each have a UV/AOP system to treat RO permeate. Each train will have an ammonium sulfate and a sodium hypochlorite injection point in the UV/AOP influent. Online meters or analyzers will be used to continuously monitor total chlorine residual before and after sodium hypochlorite and ammonium sulfate injection, free chlorine residual after sodium hypochlorite injection, reactor UV intensity, and influent flow, temperature, pH, and UVT. A PLC-based system will control UV dose and sodium hypochlorite dose.

   Chlorine will be used to generate hydroxyl radicals for advanced oxidation and will be dosed as sodium hypochlorite in the UV/AOP influent. Sodium hypochlorite dosing will be based on the UV/AOP influent flow and the free chlorine residual measured after the sodium hypochlorite injection point to achieve a desired free chlorine residual. Ammonium sulfate will be used as needed to prevent bromate formation during UV/AOP treatment. Dosing will be based on the UV/AOP influent flow and the total chlorine in the RO permeate to achieve a desired residual.

   The number of lamps online and ballast power level in each UV system will be modulated to maintain a target UV dose. Testing will be performed at the CASSF to develop a UV dosage algorithm, which will use inputs of the measured UV intensity, influent UVT, and UV/AOP influent flow to calculate the UV dose.

3. Control Descriptions:

   a. Local Manual Control

      1) Per UV System Vendor Package

b. Local Auto Control

1) By Vendor

c. SCADA Manual Control

1) Per UV System Vendor Package

d. SCADA Auto Control

1) Per UV System Vendor Package

END OF SECTION

SECTION 40 95 10
PLC-BASED CONTROL SYSTEMS HARDWARE

PART 1 — GENERAL

1.01 THE REQUIREMENT

A. The Contractor shall furnish, supervise installation, assemble and configure, program, and place into service the Plant PLC-based Control System (PLCS) specified under this Section, Specification Section 40 93 00 – Project Control Philosophy and in Specification Section 40 95 20 - PLC-Based Control Systems-Software. In addition, the Contractor shall field assemble, install, field test and supervise integration and startup of each Vendor-Supplied PLC-based Control System (PLCS) listed in section 40 91 00-1.1 and specified in this Section and Specification Section 40 93 00 – Plant Control Philosophy. All work shall be executed in accordance with the requirements of the Contract Documents. The Contractor shall also reference the Appendices I/O lists and control network architecture diagram I-06.

B. **Plant System Integrator**: The Contractor shall be singularly responsible for selecting, configuring, and verifying correct operation of compatible hardware and software to provide a functional Plant PLCS SYSTEM. The Contractor shall be the integrator of all hardware and all database, data acquisition, control, display, and all other system software. Additionally, the Contractor shall be responsible for the application programming of the PLCs and GUI software per Section 40 93 00 – Plant Control Philosophy and other sections of the contract specifications.

C. **Vendor Package Supplier:** It is the intent of these specifications to have the Vendor Package Supplier of each package system to be singularly responsible for selecting, configuring, and verifying correct operation of compatible hardware and software to provide a functional Vendor PLCS. In order to preserve this focused responsibility, the Vendor Package Supplier shall be the integrator of the furnished vendor hardware, database, data acquisition systems, control functions, operator displays and all other system software. Additionally, the Vendor Package Supplier shall be responsible for the application programming of the furnished PLCs and GUI software per the Vendor submitted / Engineer approved Control Strategies, applicable general and process specific sections of Section 40 93 00 and other sections of the contract specifications

D. **Plant / Vendor PLCS Configuration:** The PLCS shall consist of PLC's, PC-based operator workstations and all required equipment and peripherals as shown on the Control Network Architectures and as described in these specifications, and as required to meet the functional intent of the specifications. Substitutions for Engineer approved and/or specified PLCS functions are not permitted.

E. The PLCS shall be in conformance with the following key system criteria.

1. All PLCs shall be of the same manufacturer.

2. Unless noted otherwise, peer to peer networks shall conform to IEEE 802.3 Ethernet protocols to preserve a nonproprietary system infrastructure.

3. All database structures shall strictly adhere to SQL and promote an open interface with third party software applications.

F. Hereinafter, the term Contractor shall be used to represent the party responsible to the GENERAL Contractor for the Work of this division.

G. Scope of Work:

1. The Contractor shall furnish and install the Plant PLCS as specified within the Contract Documents. The Contractor shall be responsible for all equipment selection and supply, hardware and software submittal preparation, system integration, programming, graphics generation, supervision of installation, testing, training, start-up, and other implementation activities for the Plant PLCS as detailed in the contract documents. The PLC hardware and software shall be standardized so as to utilize off-the-shelf, commercially available configurations of hardware and software modules.

2. The Contractor shall install, and field test each vendor PLCS as specified within the Contract Documents. For each vendor package, the Vendor shall be responsible for all equipment selection and supply, hardware and software submittal preparation, system integration, programming, graphics generation, supervision of installation and field testing, training, start-up, and other implementation activities as detailed in the contract documents. The PLC hardware and software shall be standardized so as to utilize off-the-shelf, commercially available configurations of hardware and software modules

H. The Contractor shall provide installation, labor and engineering required to assure the proper installation and operation of the entire PLCS (Plant PLCS and the PLCS of all Vendor packages listed in Section 40 91 00-1.1). The Contractor shall be responsible for providing and installing a complete and functional system, fully programmed to meet all the requirements of the Contract Documents. The work, equipment and services shall include but not be limited to:

1. Preparation of PLCS hardware and software shop drawing submittals for Engineer approval.

2. Procurement of all hardware and software required to conform to these specifications.

3. Installation of a complete and operational PLCS network, as outlined in the contract Control Network Architectures and specified herein.

4. Performing all specified PLCS tests, adjustments, and calibrations.

5. Furnishing qualified labor to perform PLCS installation, programming, and start-up.

6. Furnishing qualified certified instructors to provide PLCS instruction and training.

7. Furnishing all required PLCS tools, test equipment, testing documentation, spare parts, supplies, operation and maintenance manuals, programming listings, and reproducible record drawings, as specified herein.

8. Furnishing qualified labor to perform GUI display and PLC I/O database development, PLC driver interface configuration, establish redundant communications and automated system report generation.

I. The Contractor shall provide on-loan, any and all PLCS system equipment required for partial start-up of a process area or system.

J. The Contractor shall be responsible for the interface to and integration of existing systems, vendor systems and systems furnished by others.

1.02 REFERENCE SPECIFICATIONS, CODES, AND STANDARDS.

A. PLC-based control systems-hardware reference specifications, codes, and standards shall be provided in accordance with Specification Section 40 91 00 - PROCESS CONTROLS AND INSTRUMENTATION SYSTEMS.

1.03 CONTRACTOR AND VENDOR SUBMITTALS

A. **General:** Unless specifically noted otherwise, submittal requirements of sub-section 1.3 apply to both Contractor PLCS submittals and the individual Vendor package PLCS submittals. Where the “entire PLCS” is referenced, the submittal component is intended to be submitted by the Contractor and shall include the Plant PLCS and the PLCS of all Vendor packages listed in Section 40 91 00-1.1.

B. **Shop Drawings**: PLCS submittals shall be in accordance with the applicable requirements of Specification Section 40 91 00 - PROCESS CONTROLS AND INSTRUMENTATION SYSTEMS. PLCS submittals shall, however, be made separately from other process control and instrumentation system submittals. PLCS software submittals shall be provided in accordance with the requirements of Specification Section 40 95 20 - PLC-Based Control Systems-Software.

C. **Hardware Submittals:** The PLCS hardware submittal shall be a singular all inclusive submittal which shall include but not be limited to:

1. A complete index appearing in the front of each bound submittal volume. System groups shall be separated by labeled tags.

2. Complete grounding requirements for the entire PLCS including any requirements for PLCS communication networks and control room equipment.

3. Requirements for physical separation between PLCS components and 120 volt, 480 volt power sources.

4. Contractor Only: Control room floor plans drawn to scale depicting the removal and demolition of existing equipment, conduit and wiring. Control room floor plans shall be drawn to scale with equipment and furniture placement. Drawings shall be drawn in a 1/2 inch = 1 foot scale.

5. UPS and battery load calculations to show that the backup capacity and time meet the specified requirements.

6. A complete set of the entire PLCS diagrams (for new, existing and vendor furnished equipment) which depict:

    a. All PLC's, workstations, control room worktables and/or consoles, printers, communication devices and communication links.

    b. All cables required to support the communication requirements. A separate diagram shall be submitted for each component fully annotated with conduit size and number associated with the power source.

7. Data sheets shall be included for each PLCS component together with a technical product brochure or bulletin. These data sheets shall show the component name as used within the Contract Documents, the manufacturer's model number or other identifying product designation, the project tag number, the project system of which it is a part, the project site to which it applies, the input and output characteristics, the requirements for electric power, the ambient operating condition requirements, and details on materials of construction.

8. Complete and detailed bills of materials: A bill of material list, including quantity, description, manufacturer, and part number, shall be submitted for each component of the PLCS system. Bills of material shall include all items within an enclosure.

9. Site-specific (and Vendor skid) arrangement and construction drawings for all equipment cabinets, and/or consoles including dimensions, identification of all components, preparation and finish data, nameplates, and the like. Drawings shall be scaled and show the position of the equipment at its intended installation location. Drawings must show a scaled representation of the placement of all equipment and its spatial relationship to all other equipment located in the abutting and adjoining areas. All required access and clearances associated with the equipment must be shown with a statement of compliance to manufacturer's recommendations, NEC, and other applicable codes.

10. Complete PLC System calculations to include, but not be limited to:

    a. PLC memory calculations to demonstrate that the specified processor and memory allocation will meet all present and future memory requirements as specified herein including required support for redundant processor configuration as applicable.

    b. PLC card calculations to demonstrate that the specified number of installed I/O cards meets present and 20% spare requirements.

c. PLC I/O chassis sizing and quantity to accommodate I/O and communication cards for present, future and 20% spare requirements.

d. PLC power supply requirements for each PLC and RIO rack.

11. Calibration, adjustment, and test details for all PLCS components.

D. Owner's Manuals: General requirements for Owner's Manuals are as described in Specification Section 40 91 00 – PROCESS CONTROLS AND INSTRUMENTATION SYSTEMS. The following items shall also be included in the software manual:

1. A documented PLC program listing including the I/O list and housing configuration for each PLC, a memory usage report for each PLC, and a register layout list for each PLC.

2. A documented configuration listing for each workstation, server, and Ethernet switch.

3. Operation and maintenance manuals for the PLCs, servers, workstations, printers, routers, Ethernet switches and all other PLCS hardware specified herein and shown on the contract drawings.

E. Entire PLCS Test Procedures

1. System test procedures (which shall include Vendor submitted test procedures) shall be developed/coordinated by the Contractor in accordance with the various system test requirements specified herein. Proposal test procedures shall be submitted to the Engineer for review. An approved submittal shall be required prior to the commencement of any system test.

2. Procedures shall be prepared for each process system. The procedures shall be in narrative form and shall describe sequentially the operational steps to be followed in verifying the correct operation of each process system, including all features described in the control strategies contained in Specification Section 40 93 00. All equipment, including the PLC system and its various workstation displays, which function together to form a complete process system shall be tested together, including interlocks between devices performed by the PLCS.

3. Procedures shall be prepared for each Vendor package system by the Vendor Package Supplier. The procedures shall be in narrative form and shall describe sequentially the operational steps to be followed in verifying the correct operation of the package system including all features described in the Engineer approved Vendor control strategies and any additional control requirement described in Specification Section 40 93 00. All Vendor package equipment, including the PLC system and its operator interface displays, which function together to form a complete package system shall be tested together, including interlocks between devices performed by the PLCS.

F. Factory Test Procedure:

1. The Contractor shall prepare and submit a factory test procedure which incorporates test sequences, test forms, samples of database lists a PLCS testing block diagram, and an estimated test duration which comply with the requirements of the factory test specified herein.

2. Similarly, each Vendor Package Supplier shall prepare and submit a factory test procedure which incorporates test sequences, test forms, samples of database lists, a PLCS testing block diagram and an estimated test duration which comply with the requirements of the factory test specified herein.

1.04 SERVICES OF MANUFACTURER'S REPRESENTATIVE

A. The Contractor shall provide visits by, and services of, technical field representatives of the PLC and GUI software manufacturer for installation certification, system testing, training, and start-up. All associated costs shall be the responsibility of the Contractor. Refer to Specification Section 40 91 00 for additional Manufacturer's services required.

1.05 STORAGE AND HANDLING

A. All equipment and materials delivered to the job site shall be stored in a location which shall not interfere with the operations of City of San Diego's personnel or interfere with construction. Storage and handling shall be performed in a manner which shall afford maximum protection to the equipment and materials. It is the Contractor's responsibility to assure proper handling and on-site storage.

1.06 SPECIAL WARRANTY REQUIREMENTS

A. Special warranty requirements shall be in accordance with the applicable requirements of Specification Section 40 91 00 and shall be coordinated by the Contractor. The following additional warranty requirements apply to the entire PLCS (inclusive of the PLCS of all Vendor packages listed in Section 40 91 00-1.1):

B. The complete PLCS (and associated software) included herein shall be guaranteed to meet or exceed the design requirements set forth in the Contract Documents.

C. Equipment, software, and materials which do not achieve design requirements after installation shall be replaced or modified by the Contractor to attain compliance. All associated costs shall be the responsibility of the Contractor. Following replacement or modification, the Contractor shall retest the system and perform any additional procedures needed to place the complete PLCS in satisfactory operation and attain design compliance approval from the Engineer.

D. The Contractor warrants the materials and workmanship used for the PLCS control system and further guarantees the materials and workmanship used for any equipment and materials produced and furnished hereunder as a part of the Work to be as herein specified and agreed upon, free from injurious defects, and in all respects satisfactory for the service required.

E. The Contractor warrants/guarantees the satisfactory performance of the equipment and materials under operating conditions for a period of two years after the date of final acceptance of the entire PLCS (i.e., completion of all contractual items including a successful system-wide 14 day performance test as specified in Part 3 of this section). In the event that tests and inspections disclose latent defects or failure to meet the specified requirements, the Contractor upon notification by the Engineer shall proceed at once to correct or repair any such defects or non-conformance or to furnish, at the delivery point named in the Contract Documents, such new equipment or parts as may be necessary for conformity to the specified requirements, and shall receive no additional compensation therefore. In the case of any required repairs or other corrective or remedial work covered under warranty, the warranties on all such corrections, repairs, new equipment, or parts shall be extended for an additional 24 months from the date of final acceptance or 12 months from the date of completion of any such corrections, repairs, new equipment, or parts, whichever date is later. The Contractor shall reimburse City of San Diego for all costs incurred in the removal of the defective material and installation of the replacement.

PART 2 — PRODUCTS

2.01 GENERAL

A. The requirements of Specification Section 40 91 00 apply to this Section.

B. All materials and all PLCS equipment furnished under this Contract shall be new, free from defects, of first quality, and produced by manufacturers regularly engaged in the manufacture of these products.

C. **Hardware Commonality:** Where there is more than one item of similar equipment being furnished all such similar equipment shall be the product of a singular manufacturer.

D. PLCS Growth Provisions:

1. In addition to satisfying the functional requirements of these specifications, all PLCS equipment and resources including PLC memory requirements GUI software, historian, data base, reporting packages, hard disks, RAID units, etc., shall be provided to accommodate a 20 percent expansion in the number of I/O points shown on the drawings and/or listed in the appendix.

2. All equipment and resources, including PLC I/O cards and implementation services, shall be provided such that at least 20 percent project growth (beyond listed future points) can be implemented into the PLCS without any additional cost to City of San Diego. The I/O points included in the 20 percent project growth requirement shall be termed “implemented spare I/O”. The 20 percent implemented spare I/O is 20 percent of the total project I/O listed in the appendix and may be implemented in any one or more I/O racks at the direction of the Engineer at any time during the project up to the start of factory testing. Subsequent to factory testing the unused implemented I/O, if any, shall be delivered to City of San Diego as spare I/O.

3. The entire PLCS being furnished shall be capable of being modularly expanded to accommodate a twofold increase in process reporting/display requirements and manual input requirements.

4. All equipment and resources shall be able to modularly accept this anticipated future expansion without the need to replace or retire any PLC component or resource.

2.02 PLC ENCLOSURES

A. Each PLC and its corresponding I/O modules, power supply module(s), communication interface device(s), peripheral equipment, and UPS shall be mounted inside suitable enclosures. All I/O wiring from the field to the I/O modules shall be routed within wireways and terminated on terminal blocks in the enclosure. Fiber optic cabling shall be routed within panel wireways and all fibers (active and spare) terminated within the specified fiber cross connect box. Fiber jumper cables shall be labeled and routed within wireways.

B. PLCS enclosures shall be provided in accordance with Specification Section 40 92 00 - CONTROL PANELS.

2.03 HARDWARE

A. **Programmable Logic Controller**:

1. Construction: Each PLC central processing unit (CPU) shall be of solid-state design. All CPU operating logic shall be contained on plug-in modules for quick replacement. Chassis wired logic is not acceptable. The controller shall be capable of operating in a hostile industrial environment (i.e., subject to heat, electrical transients, RFI, vibration, etc.) without fans, air conditioning, or electrical filtering (from 0° to 60° C at 95 percent humidity, non-condensing).

2. Components-General: Each PLC shall have all of the facilities required to implement the control schemes and database shown and specified in the Contract Documents. PLC's shall all have floating point math and PID controller modulating capability. Each CPU shall provide internal fault analysis with a fail-safe mode and a dry contact output for remote location alarming, and a local indicator on the PLC frame in the event of a fault in the PLC.

3. Central Processors: Each central processor shall contain all the relays, timers, counters, number storage registers, shift registers, sequences, arithmetic capability, and comparators necessary to perform the specified control functions. It shall be capable of interfacing sufficient discrete inputs, analog inputs, discrete outputs, and analog outputs to meet the specified requirements plus at least 100 percent excess capacity. All PLCs shall be provided to support and implement closed loop floating and PID control which is directly integrated into the PLC control program. The power supply shall contain capacitors to provide for orderly shutdown in the event that incoming power does not meet specifications. If this occurs, the processor will cease operation, forcing all outputs off. The processor

shall have a key type memory protect switch to prevent unauthorized program changes. The processor shall include floating point hardware.

4. Memory: Each programmable controller shall be supported by CMOS semiconductor memory with battery backup. (The CMOS user programming memory shall be as defined under paragraph 2.3.A-8.) The unit shall also be equipped with nonvolatile flash memory of sufficient capacity to store the fully commented control program, tag data, and unit operating system with room for 50% growth. An indicator shall show the status of the batteries and a reference shall be available though the discrete outputs, to alert the Operator that the batteries should be changed. Each controller shall be supplied with an internal lithium battery which shall retain the program during power outages for up to one year.

5. Each unit shall be supplied with sufficient memory to implement the specified control functions plus a reserve capacity of 20 percent of the total provided. This reserve capacity shall be totally free from any system use. The memory shall be programmed in a multi-mode configuration with multiple series or parallel contacts, counters, timers, and arithmetic functions.

6. Controllers: Each programmable controller shall be capable of being programmed with an IEC61131-3 compliant software using simple "ladder diagram" language, and Sequential Functional Blocks. It shall be easily reprogrammed locally with a portable laptop computer or from a remote location via the control system network. Where indicated, the controller shall support hot-standby CPU redundancy. Control may be switched from the primary to the secondary processor (and vice versa), automatically or manually, without interruption of plant control. Redundant processors shall be capable of being automatically or manually synchronized i.e. a program change in one processor shall be automatically reflected in the second processor. In manual mode, auto synchronization is suspended until the programmer releases the changes for update.

7. Data Communication: Each programmable logic controller shall be equipped with, or have access via linked backplane to, the following communication options as required (and in the quantities indicated) on the Control Network Architectures:

   a. Single copper port (RJ45) Ethernet/I/P card (1756-EN2T)

   b. One RS-232-C serial programming port.

   c. Dual copper port Ethernet/I/P I/O Adapter module (1756-EN2TR)

   d. ProSoft Modbus RS-485 modules – for Modbus RTU and/or Modbus/TCP communications as indicated

   e. One USB Port (minimum)

   f. Note: Compactlogix processors have inherent communication option limitations as indicated in 2.3-9.a herein.

8. CPU: The 32-bit CPU shall support floating-point math and PID functions. ControlLogix processors shall be web-enabled and shall support 478K of I/O memory, 4 MB of user addressable memory (lithium battery-backed), 64 MB of non-volatile memory. CompactLogix processors shall support 1.5MB of user addressable and I/O memory (lithium battery-backed) and 64MB of non-volatile memory (removable Flash card). A fully commented copy of the active program and I/O tag set shall be stored on the Flash card.

9. Manufacturer: The programmable logic controllers shall be as manufactured by Allen Bradley, no equal. Where indicated on the Control Network Architectures, processors shall be AB ControlLogix Model L72 (or better as recommended by the Vendor to support I/O and communication requirements) with 1756 eWeb Ethernet module and software configuration tools with CPU hot-standby option (using the 1756-RM2 Module) and redundant power supplies (as required by the contract drawings). In other locations where indicated on the Control Network Architectures, processors shall be AB CompactLogix Model L33ER with Compact Flash card, integral dual Ethernet port and USB port. Compactlogix installations shall be limited, where required, to one additional Prosoft Modbus card.

10. Where a Vendor package employs a microcontroller (as approved by the Engineer), the controller shall be as manufactured by Allen Bradley, Micrologix Model 1400 (or better as recommended by the Vendor). Controller shall include RJ-45 Ethernet port and RS-232C programming port. Communication interface to the plant control system shall be via hardwired I/O as shown on the P&ID drawings. Furnished model shall allow for 20% spare I/O.

11. The Contractor shall ensure that the firmware revision of each PLC processor matches (i.e. is in lock-step with) the revision of the furnished RSLogix 5000 programming software. Refer to Specification Section 40 95 20 for software supply requirements. This requirement shall also apply to the package Vendors.

B. PLC Power Supply

1. The PLC shall operate in compliance with an electrical service of either 120 VAC, single phase, in the frequency range from 47 to 63 Hz, or 24 VDC. The power supply shall be mounted in the PLC housing and be sized to power all modules mounted in that housing and an "average module load" for any empty housing slots plus 25 percent above that total. Power supply shall be by the same manufacturer as the PLC and shall be of the same product line. A single main power supply shall have the capability of supplying power to the CPU and local input/output modules. Auxiliary power supplies shall provide power to remotely located racks. Redundant “hot-standby” power supplies shall be furnished where indicated on the Control Network Architectures for both processor and RIO chassis. The power supplies shall be AB 1756-PB72 for the ControlLogix and **AB** 1769-PB4 for the CompactLogix. Reference the Control Network Architectures for quantities and distribution.

2. The power supply shall automatically shut down the PLC system whenever its output current is detected as exceeding 125 percent of its rated current. The power supply shall monitor the incoming AC line voltage for proper levels. When

the power supply is wired to utilize 120 VAC power, the system shall function properly within the range of 97 to 132 VAC. If the voltage level is detected as being out of range for more than one-half line cycle, the power supply shall automatically shut down the system and remain disabled until the proper voltage level returns. In addition, the power supply shall provide surge protection, isolation, and outage carry-over up to 2 cycles of the AC line. In cases where the AC line is especially unstable or subject to unusual variations it shall be possible to install a constant voltage transformer having a sinusoidal output waveform.

3. Design features of the PLC power supply shall include diagnostic indicators mounted in a position to be easily viewed by the user. These indicators shall provide the operator with the status of the DC power applied. In addition, a means of disabling power to the CPU shall be possible from a power disconnect switch mounted in a position easily accessible by the operator.

4. At the time of power-up, the power supply shall inhibit operation of the processor and I/O modules until the DC voltages are within specifications.

5. The power supply shall offer fuse protection.

C. **PLC Input/Output (I/O) Modules**: All I/O housings and modules shall be suitable for hostile industrial environments as described in Paragraph 2.3.A.1 above. All I/O modules shall be isolated and conform to IEEE Surge Withstand Standards and NEMA Noise Immunity Standards. The I/Os shall be 4-20 mA DC for all analog inputs and outputs and shall be 24 VDC for discrete inputs and dry relay contacts for safe discrete outputs. Modules shall be removable without having to disconnect wiring from the module's terminals by means of a swing-arm or plug-in wiring connector.

D. Each PLC location shall contain the I/O modules required to provide all of the I/O points contained in the I/O Lists plus available capacity to accommodate all future points. As a minimum, each PLC location shall contain an installed spare capacity of 20 percent of each type of I/O used at that location. Circuit components for both remote input and output shall be mounted on plug-in passive backplanes and keyed to prevent incorrect module insertion. Furnished I/O modules and housing chassis shall be as manufactured by Allen Bradley, ControlLogix I/O Series 1756 or Allen Bradley CompactLogix I/O Series.

1. Discrete Input Modules: Defined as contact closure inputs from devices external to the programmable controller module. Individual inputs shall be optically isolated from low energy common mode transients to 1500 volts peak from users wiring or other I/O Modules. The modules shall have LED's to indicate status of each discrete input. Input signal level shall be 24 VDC. The input module shall have a maximum of 16 points each. The PLC system shall also offer discrete input hardware consisting of the following types:

   a. AC/DC input for devices which operate at 120 VAC, 60 Hz.

   b. AC input for devices which operate at 24 VAC, 60 Hz.

c. Isolated AC input which provides isolation of 120 VAC or 120 VDC input signals.

2. Discrete Output Modules: Defined as contact closure outputs for ON/OFF operation of devices external to the programmable controller module. The output modules shall be optically isolated from inductively generated, normal mode and low energy, common mode transients to 1500 volts peak. All output modules shall have LED's to indicate status of each output point. Output contact rating shall be 2A minimum, 24V AC. Each output point shall be individually isolated, fused and connected to buffer relays. Buffer relays shall have contact ratings for the attached loads. The PLC system shall also offer discrete output hardware consisting of the following types:

   a. AC output for devices which operate at 120 VAC, 60 Hz.

   b. AC output for devices which operate at 24 VAC, 60 Hz.

3. Analog Input Modules: Defined as 4 to 20 mA DC signals, where an analog to digital conversion is performed with a minimum of 16-bit precision and the digital result is entered into the processor. The analog to digital conversion shall be updated with each scan of the processor. Analog input modules shall have eight differential inputs each. Input modules shall be source or sink to handle 2-wire or 4-wire transmitters respectively. The Contractor (or Vendor package Supplier) shall provide current loop isolators as required to break ground loops.

4. Analog Output Modules: Defined as 4 to 20 mA DC output signals where each output circuit performs a digital to analog conversion (minimum 12-bit precision) with each scan of the processor. Each analog output module shall have four isolated output points which shall be rated for loads of up to 1200 ohms. The Contractor (or Vendor package Supplier) shall provide current loop isolators as required to break ground loops.

5. Remote I/O Adapter Module: Any PLC location which requires more than one housing to mount all of the I/O modules shall be supplied with an appropriate remote I/O adapter module for each secondary housing. The adapter module shall support all of the types of I/O modules required. The remote I/O in the secondary housing(s) shall be mounted in the same enclosure housing the PLC.

6. Modbus Scanner: Modbus TCP scanner modules shall be provided to facilitate an interface between field Modbus nodes and the PLC. Ports shall support shielded RS-485 (RJ45) full-duplex connections.

E. **PLC Housing**: The PLC, power supply, and I/O modules shall be mounted in a suitable standard housing. Individual housing slots shall be mechanically configurable to prevent insertion of incorrect modules. Each PLC location shall have a minimum of 3 empty I/O module slots, each fitted with a manufacturer issued protective cover.

F. **Portable Laptop**: All programming shall be accomplished from a portable laptop or from a workstation through direct serial link to the PLC or over the control system network. The laptop shall be capable of being plugged into the PLC. All PLC interface hardware and programming software shall be supplied. Programming, monitoring, searching, and editing shall be performed by the laptop. These functions shall be capable of being performed both "on-line" while the processor is scanning or "off-line".

1. One ruggedized laptop computer shall be furnished by the Contractor. Complete software as detailed in Specification Section 40 95 20 shall be furnished for the laptop. A protective carrying case, AC adapter, external optical wheel mouse and spare lithium ion battery pack (elite model) shall also be included with the unit. The laptop computer shall be as manufactured by Panasonic Toughbook Model CF-53 or Engineer approved equal with 2.4GHz Intel Core i5-4310U vPro Processor, 320GB hard disk (minimum), 4GB of RAM, and three USB 2.0 ports. An external USB DVD-RW / CD-RW unit shall also be supplied. The unit shall be equipped with a 14-inch anti-glare TFT active-matrix LCD, shock-resistant hard drive and waterproof /dust-resistant keypad and display.

2. The laptop shall be equipped with an integrated 10/100/1000 Base-T (RJ45) Ethernet connection and integral dual-band wireless communication that is IEEE 802.11a/b/g/n/ac compliant.

3. The ruggedized laptop shall be portable, allowing for use in an industrial environment, without special protection. The Contractor shall provide the laptop, complete with manuals, to the Owner to enable future system support. The laptop shall be forwarded to Owner during start-up training.

G. **Uninterruptable Power Supply (UPS):** Provide and install line interactive UPS units where indicated and as specified on the Control Network Architectures.

1. The UPS shall maintain conditioned power to all associated loads under normal conditions (line power available) and also under battery-powered conditions (for the specified time period). UPS submittals shall include sizing calculations, which support the battery size selected and detail projected battery life at 50% and 100% of maximum load at the average ambient temperature of the indicated installation environment.

2. UPS units mounted within panels shall be secured to a shelf attached to the panel backplane. Floor mounted UPS units shall be subject to NEC code clearance requirements.

3. Reference specification Section 26 09 16 – ELECTRICAL CONTROLS AND RELAYS for additional specification requirements for UPS.

2.04 WORKSTATION AND SERVER HARDWARE

A. IBM compatible personal computers (PC's) complete with keyboard, optical cursor-positioning device and LED monitor shall be provided by the Contractor as shown in the Control Network Architectures. Each computer shall be furnished in a lockable

mid-tower chassis or rack-mountable chassis as indicated in the contract drawings. All applicable software and hardware manuals, and disks shall accompany each computer (refer to Specification Section 40 95 20 for specific software requirements). Computers provided shall support the latest AGP, PCI, ISA and USB bus architectures and all industry standard multi-media functions as an integral part of the system. All computer systems shall be as manufactured by Dell or approved equal. For hardware reference clarity, the term “Server” shall refer to the Historian; the term “Workstation” shall refer to all other computers, rack-mounted or desktop, shown on the Control Network Architectures, including the SCADA I/O, Windows Domain servers. The wall-mounted LED display shall be as defined in section 2.10-A.

B. **Central Processing Unit (CPU)**: The CPU for each Workstation shall be a single quad-core Intel Pentium Xeon 5500 processor with hyper-threading technology support and a minimum clock frequency of 3 GHz. The Server shall be furnished with dual 8-core Intel Pentium Xeon E5-2667v2 processors with a minimum base clock frequency of 3.3 GHz.

1. Cache Memory: Each Workstation shall have a minimum of 4MB of L3 cache memory and 800 MHz system bus (minimum). The Server shall support an 8 GT/s system bus (minimum) with 25MB cache.

2. Random Access Memory (RAM): A minimum of 4GB of Intel PC DDR400 ECC memory modules shall be installed within each Workstation with the exception of the SCADA I/O servers which shall be furnished with 8GB of memory. The Server shall be furnished with a minimum of 16GB of DDR PC2100 ECC SDRAM installed.

3. Color Monitor: Computer monitors, where indicated on the Control Network Architectures, shall be 21-inch (viewable) flat-screen, LED-backlit LCD monitor type. Each color monitor supplied shall have a minimum resolution of 1920 x 1080 and shall have a minimum viewing angle of 170° vertical and 176° horizontal. The color monitor shall be manufactured by NEC-Mitsubishi, Multi-sync EX Series (monitor case color shall match computer chassis; shared monitors shall be black) with the following integral ports: VGA, DisplayPort or HDMI, DVI-1. In addition, each Workstation (except the domain controllers) shall be furnished with an Nvidia NVS 300 64-bit graphics adapter with 512MB DDR3 (default integrated graphics card should be disabled). The Server and the domain controllers shall use the integrated Matrox G200 video card with 8MB of shared video memory (or manufacturer installed equal or superior). Graphic card configuration shall support direct connection to the supplied monitor without the use of a converter.

4. Disk Drives: Each Workstation chassis shall include four drive bays and shall be furnished with an integrated, dual-channel, PERC Series-7 adapter with two Tier-1 500 gigabyte (15K RPM) SAS hard drives installed. Drive “0” shall house the operating system and all control system application software and drive “1” shall house the application collected data. (Note: The Contractor shall be responsible for confirming with the application software vendor that the furnished revision of the application software is not impacted by the stipulated segregation of collected

data from the base application.) The Server chassis shall include eight drive bays and shall be equipped with PERC Series-7 RAID controller with internal and external RAID assembly support. The Server shall include four hot-swappable Tier-1 500 gigabyte (15K RPM) SAS hard drives configured as a RAID Level 6 Array.

5. I/O Ports: Each Workstation and Server shall be provided with a minimum of one RS-232 serial port and four USB 3.0 ports

6. Mass Storage: The Engineering Workstation shall be furnished with an internal EIDE DVD / CD R/RW unit, installed and configured. The unit shall support as a minimum, 16x record speed and 32x playback speed. The DVD / CD R/RW unit shall be as manufactured by Dell. Drive color shall match computer chassis.

7. Network Communications: Each Workstation (as shown on the Control Network Architectures) shall be furnished with an integrated 10/100/1000 Base-T auto-sensing network interface card (NIC), tested and configured. The NIC shall be capable of automatically detecting and then selecting either 10, 100 or 1000 Mbps network speeds. It shall support a parallel tasking architecture with bus mastering capability. The NIC shall be suitable for operation at the maximum clock speed of the workstation's CPU. (Note: SCADA I/O and server shall be configured as detailed on the Control Network Architectures.) The Server shall be equipped with (2) dual-port 10/100/1000 Base-T NIC's configured as noted on the Control Network Architectures.

8. Power Supply: The Server, the Windows Domain Servers (primary and backup), the SCADA IO Servers (primary and backup) and the Viewpoint Server, shall be furnished with redundant, hot-swappable power supplies and redundant cooling fans with internal temperature monitoring. All Workstations shall include internal temperature monitoring.

9. Service Contract: The Contractor shall obtain and finance a hardware service contract with a local representative of the dealer or manufacturer, effective for the duration of the project. The service contract shall include, but not be limited to the following:

    a. A minimum of 24-hour response time to all hardware failure calls.

    b. A minimum 48 hours "hot-swap" response time. Should extensive repairs be required, the service contract shall ensure like or equal replacement hardware within 48 hours of original problem notification.

    c. Manufacturer qualified on-site service technicians. Should on-site service be required, the service contract shall ensure that all on-site technicians are qualified by the manufacturer to perform repairs and/or upgrades on the equipment under the service contract.

    d. The service contract shall cover all workstations, printers, and peripheral equipment specified in this section.

2.05 PERIPHERAL DEVICES

A. **General:** Peripheral devices shall be furnished, installed ad configured by the Contractor as detailed in this section and as shown and/or specified on the Control Network Architectures. Firmware modules, where applicable, shall be of the latest revision. If the specified model has been or is currently scheduled to be discontinued by the manufacturer, the Contractor shall furnish (with the approval of the Engineer) the manufacturer recommended replacement model of equal or better functionality, performance and reliability. The Contractor will also be required to furnish the communication interface cabling as well as fiber optic cabling (all as specified herein) to support interconnectivity of the various control/RIO cabinets, communication/server cabinets, field equipment, Vendor cabinets, MCC cabinets, drives etc. all as shown on the Control Network Architectures. The Vendor shall be required to furnish panel mounted peripheral control and networking devices as shown on the network diagrams and specified herein. Refer to the spec section 40 91 00, the electrical location plan drawings and the electrical cable schedule for additional supply and installation requirements.

   The Contractor shall also be responsible for configuring the network hardware, verifying the firmware, adding communication modules (and other network hardware components as specified) and configuring the network access control appliances. Refer to specification section 40 91 00-3.2 (paragraphs C and D) for required manufacturer services.

B. Control cabinet Ethernet switches shall be industrial, modular, layer 2/3 aggregate type with dual gigabit fiber uplink ports. Din-rail mounted unit shall be supported by redundant 24Vdc power supplies and shall be UL-508 rated and IEC 61850-3 rated. The switch shall support SNMP, Web Device Manager and CNA. PoE will not be used for any device. Ethernet switch shall be as manufactured by Cisco, IE 3000 model. Required port density (using SFP modules) shall be as indicated on the Control Network Architectures with a minimum of two spare ports allowed for. For all unused Ethernet switch access ports the Contractor shall secure the port to allow only registered MAC addresses (i.e. those associated with the Contract furnished laptop or local network equipment) to access the network.

C. The stacked 10/100/1000 Base-T layer 2/3 Ethernet switching hubs shown on the Control Network Architectures shall be as manufactured by Cisco, Model 3850-24T Catalyst Series Model (4GB DRAM and 4GB Flash memory). The Ethernet switches shall be rack-mounted and redundantly linked using Cisco's Stackwise-480 technology. The stacked switches shall be configured to function as a single switch. Switches shall be of the same image-based license level to ensure successful data stack implementation. Each switch will also include redundant power supplies to support a Cisco StackPower arrangement. Stackwise-480 cables and StackPower cables shall be 50cm and 30cm in length respectively, all as manufactured by Cisco.

D. Satellite internet: Internet access shall be established via a Statelite internet connection for remote accessibility and shall be as manufactured by SpaceX, Starlink with supporting appurtenances, including antenna dish, Wifi router, power supply and Power over Ethernet (PoE) cables and mounting hardware.

E. VPN Firewall with Remote Access Appliance: Firewall shall be as manufactured by Cisco, Model ASA 5510 Adaptive Security Appliance with 6 concurrent VPN client licenses. The firewall shall be configured as the primary means of preventing unwanted protocols, data-types and electronic viruses from contaminating the control network LAN via remote access users. The Contractor shall be required to configure the firewall and the remote access interface in accordance with the directives issued by the Owner and the Engineer following the Network Coordination Meeting outlined below.

F. Contractor shall schedule one 4-hour Network Coordination Meeting with Owner and the Engineer to finalize detailed configuration requirements of the items listed below. Within 5 working days of the meeting conclusion, the Engineer will distribute meeting minutes which shall serve as direction for the Contractor on the specifics of the individual installation requirements. The Contractor shall consider this direction part of the contract defined work.

- Network node IP addressing and node naming conventions (including field network nodes)
- Ethernet switch configuration including:
  - VLAN usage
  - Arrangement of stacked switches
  - Terminal password protection
- Domain and domain server configuration.
- Server clock synchronization
- LAN traffic management

- Firewall Appliance configuration, VPN remote access policy configuration and local password protection.

G. **B/W Report Printer**: The printer shall be a laser printer with 256 MB (1GB) of memory, 1200 dots per inch resolution, 52 (62) pages per minute printing speed, and a 600 sheet paper capacity. The printer shall support paper or transparent media and shall support duplex printing. The laser printer shall be Hewlett-Packard LaserJet m603dn with embedded gigabit Ethernet print server and high-speed USB 2.0 port or Engineer approved equal.

H. Where indicated, Vendor furnished single-mode fiber transceivers shall be as manufactured by GE IFS: Model D7100 Series for standalone or rack mount installation. All cards shall be conformally coated and shall be rated for operation in temperature ranges of 40°C to 74°C at 95% humidity, non-condensing. Where shown on the Control Network Architectures, media converters shall be concentrated in a single 19-inch rack-mountable chassis (GE IFS R3 Rack Mount Card Cage). The chassis shall be designed such that the failure of one transceiver does not impact the

operation of any other chassis transceiver. The rack shall also support hot-swap of media converter cards and shall include manufacturer blank panels to cover spare slots.

I. Vendor furnished rack-mounted RJ-45 5e patch panels, as identified on the Control Network Architectures, shall be as manufactured by Leviton (GigaMax 5e QuickPort), sized to accommodate a 20 percent growth in port usage over that identified on the network drawings. Compact, din-rail mounted RJ-45 patch panels (Cat5e or Cat6) shall be as manufactured by Belden, MIPP Model.

J. Contractor supplied Cat5e UTP Ethernet plenum cables and patch-cords shall be as manufactured by Anixter Corp. (CommScope Uniprise) DataPipe 5E55 or Belden 7928A Cat5e DataTuff with installation and performance adhering to the requirements of ANSI/TIA/EIA-568-C.2. Network faceplates shall be furnished, as detailed in the contract Network Diagrams, all as manufactured by Leviton, single-gang Quickport with designation windows. Unless indicated otherwise, enclosed Panduit solid wall Panduct wire management systems shall be used to route exposed network cabling (as applicable). To support the admin trailer phone system, the Contractor shall install Cat6 UTP Ethernet plenum cables and patch-cords as manufactured by Belden 7931A Cat6 DataTuff.

K. Where required for Modbus communications, the Contractor shall provide industrial, 22-gauge multi-conductor (with OA shield) EIA RS-485 cabling with stranded tinned-copper conductors and PVC cable jacketing as manufactured by Belden (3106A). Install length limited to 1000m. The Contractor shall furnish and install appropriately rated and insulated terminators (RJ-45, DB-9, etc.) as necessary to complete the network. Verification will be subject to pre-commissioning loop-check activities witnessed by the Engineer.

2.06 CONTROL ROOM FURNITURE

1. Refer to Section 13 34 23.25 – PRE-FABRICATED ELECTRICAL EQUIPMENT ENCLOSURE for control room furniture requirements.

A. **Control System Server and Communication Cabinets**: The Contractor shall supply a Server and Communication Equipment Cabinet as shown on the contract drawings. The Contractor shall size the rack to accommodate the equipment shown on the contract drawings taking into account manufacturer spacing recommendations for proper ventilation. Panel construction shall conform to the following:

1. Panel shall be constructed around a welded steel frame with adjustable 19-inch rack angles, front and rear.

2. Panel side plates shall be constructed of solid 16-gauge steel. Both plates shall be equipped with key lockable quick release latches.

3. Front access shall be via a key-lockable vented window door with steel frame, tinted acrylic window, and 180° hinges.

4. Rear access shall be via a key-lockable, perforated 16 gauge steel door with 180° hinges.

5. Panel shall include a top-mounted ventilation fan tray with a perforated steel top entry cover. Ventilation unit shall be sized to accommodate maximum cabinet equipment heat dissipation. (Contractor shall provide supporting heat dissipation calculations.)

6. Panel base shall allow multiply cable entry and shall be supplied with casters, leveling feet and anti-tip angle.

7. Panel shall be supplied with two 15-port, surge protected power distribution units (PDU) each rated for 120Vac 20A. PDU shall include Amp usage readout to monitor load levels and RJ45 Ethernet port for remote monitoring and alarming. PDUs shall be vertically mounted on opposite sides of the cabinet with all power cables labelled. PDU shall be as manufactured by Tripplite or approved equal.

8. Panel shall include adequate cable management accessories to ensure an orderly and professional installation, grounding kit and interior lighting with door activated switch.

9. The control system Server and Communication Equipment Cabinet shall be as manufactured by Hoffman, Proline DataCom Server cabinet assembly, APC Netshelter SX (black finish) or approved equal.

2.07 FIBER OPTIC CABLE

A. **Submittals:** The Contractor shall comply with submittal procedures and requirements specified in Specification Section 40 91 00. In addition, the submittals shall include the following information

1. Cable pulling plan and procedure that specifies the sequence of work tasks, materials, and equipment.

2. Provide an optical link analysis for each fiber optic link. Calculate point-to-point (transmit/receive) optical power loss of the fiber link using proposed installed cable lengths. Include all losses through connectors, patch panels and patch cords. Submit calculated values including sketches graphically showing the proposed cable route.

3. Provide a point-to-point interconnection cable diagram clearly depicting and identifying actual cable routing through all raceway. Include cables, connectors, patch panels, patch cords and media converters.

4. Provide a detailed Field Acceptance Testing Procedure and Plan prior to testing of the cable. This should also include catalog data on testing equipment. Furnish certification documents for each test as described herein.

B. **Quality Assurance:** Provide all cable in accordance with the listing requirements of Article 770 of the National Electrical Code.

A. C. D Single-mode Fiber Optic Cable: The fiber optic cable shall be a round, water-resistant, fungus resistant, flame retardant, UV-inhibited tight buffer cable suitable for both indoor and outdoor installation. The fiber optic cable shall consist of, but not be limited to the following components:

- Single-mode , helically arranged, optical fibers with Aramid strength member and 900 micro meter tight buffer
- Elastomeric subcable jacket to prevent moisture intrusion
- A synthetic yarn strength member helically laid directly over the stranded core
- PVC core-locked outer jacket

Each optical fiber shall be all glass, graded index, with a core diameter of 50 microns and cladding diameter of 125 microns. The optical fiber shall have an attenuation no greater than 3.0dB/km at a wavelength of 850nm supporting a bandwidth of no less than 600MHz-km. The fiberglass shall be manufactured by AT&T, or equal.

The minimum bend radius of the cable under full long-term tensile load shall be no longer than 8-times the outside diameter of the cable. The cable shall have a crush resistance of 2200 N/cm and shall be rated for operation in temperatures ranging from -55°C to 85°C. Cable shall be unaffected by continuous or intermittent submergence in water. The outer jacket of the cable shall be surface printed with the manufacturer's identification, the cable part number and sequential numerical footmarks.

The cable manufacturer shall be ISO 9001 certified, UL listed and optimized for Gigabit Ethernet applications up to a minimum of 600m. Gel-filled cables are not acceptable. The cable shall be as manufactured by Optical Cable Corp., B Series Ultra-Fox Plus Breakout Cables Part No. B-XXXDAST5KR or Engineer approved equal.

Installation Requirements: Fiber optic cabling shall be installed in accordance with the manufacturer requirements. In addition, the installation requirements listed below shall be adhered to.

1. Install fiber optic cables in the indicated raceway systems as shown on the electrical contract drawings. Determine the location and quantity of pull boxes and handholes. Inspect raceways prior to pulling cables. Rod and swab out conduits and ducts prior to installing cables.

2. Pull cables prior to attachment of connectors.

3. Pull cables using an indirect attachment method such as a "Kellems Grip" which distributes the pulling forces over the outer portion of the cable. Pulls directly on the fiber core will not be allowed.

4. Do not exceed maximum pulling strength limits of the cable during installation. Monitor cable pull tensions at all times during the installation of the cable using a remote sensing puller, strain gauge or running line tensiometer. If electronic tension monitoring equipment is used, it shall be calibrated or checked for calibration on a daily basis or prior to any cable pull.

5. To reduce cable friction and minimize pulling forces during installation, use a polymer-based, water soluble lubricant when pulling cable.

6. Do not exceed the minimum bend radius of the cable. Tight loops, kinks, knots or tight bends will not be allowed during installation.

7. For conduit installation, the minimum bending radius (under installation tensile load) shall be as per the manufacturer specification. Use sweeping elbows at all transitions from horizontal to vertical conduit runs. Use Mogul type conduit bodies for 45 and 90 degree turns.

8. Within manholes, route and support fiber optic cable along the inside wall and protect using corrugated slit duct.

9. Pull the cable in one continuous run. Do not make splices in cable. Provide adequate run lengths on cable reels to make termination-to-termination runs without splices.

10. Provide junction boxes and pull boxes as required by the cable manufacturer.

E. **Fiber Optic Terminations:** Fiber optic waterproof termination shall be LC (snap-lock design) of ST (twist-lock design) all polymer type – as required to suit application - with ceramic zirconia ferrule as manufactured by Optokon Corp. (Methode Electronics, Inc.) or approved equal. Connector shall be constructed of nickel plated zinc alloy with thermoplastic rubber strain relief boot. Termination fiber must be bonded within the connector ferrule utilizing two part anaerobic bonding compound. Crimp type connectors and/or epoxy heat cure connectors that require ovens shall be deemed unacceptable. Connectors shall adhere to the following standards: ISO/IEC 11801, TIA 568A and CENELEC.

   Connectors shall be rated for operation in temperatures ranging from -40°C to 80°C. Boot strain relief shall accommodate up to 100N. Insertion loss and repeatability shall be less than 0.3dB.

F. **Fiber Optic Testing:** The Contractor shall be required to verify the integrity of the fiber optic cable both before and after field installation. Further, the manufacturer's factory record of the delivered fiber optic attenuation tests shall be submitted as part of the test documentation. Contractor fiber optic field testing, as detailed below, shall be witnessed by the Engineer and recorded as required.

   1. Upon receipt of the fiber optic cable reels, test each fiber separately with an Optical Time Domain Reflectometer (OTDR) to verify fiber length, attenuation and continuity. After the cable has been installed, visually inspect each fiber termination for out-of-round conditions and surface defects such as cracks and micro-chips using a 200x inspection microscope. The OTDR test shall be conducted with the following settings:

      a. Single-mode fiber test wavelength: 850 / 1300nm

      b. Test pulse: 10ns

c. Post-installation OTDR tests shall be conducted using a factory constructed dead-zone launch cable to allow for accurate reading of the first connector.

d. OTDR test must be conducted from both directions for each cable.

2. Verify the complete operation of the data transmission system in conjunction with field testing associated with systems supported by the fiber-optic data transmission system. Prior to completion of pre-commissioning testing (as detailed in specification section 40 95 10), perform the following field tests:

   a. Power attenuation test

   b. Gain margin test.

   Note: the above tests must be performed on each link and repeated from the opposite end of each link.

3. Power Attenuation Test: Power attenuation test shall be performed at the light wavelength of the transmitter to be used on the circuit being tested. The flux shall be measured at the receiver end and shall be compared to the flux injected at the transmitter end. A jumper must be added at each end of the circuit under test so that end connector loss can be validated. Rotational optimization of the connectors will not be permitted. If the circuit loss exceeds the calculated circuit loss by more than 2 dB, the circuit is unsatisfactory and shall be examined to determine the problem. The Engineer shall be notified of the problem and what procedures the Contractor proposes to eliminate the problem.

4. Gain Margin Test: Test and verify that each circuit has a gain margin that exceeds the circuit loss by at least 6 dB.

5. The Contractor shall furnish certification documents for each test and record the required data below. Include printouts from the OTDR and the power meter testing with the certification documents that shall include:

   a. Installer's company name and address.

   b. Installer's name.

   c. Date of certification.

   d. Attenuation of each fiber link.

   e. Gain margin for each link

   f. Length of each fiber optic link measured.

   g. Equipment used to certify the fiber optic link.

   h. Name and signature of person(s) recording the test data.

6. Power meters used shall have calibrations traceable to National Institute of Standards and Technology (NIST) standards and shall be capable of producing dated hard copy test results for submittal to the Engineer.

7. Performance Criteria:

   a. Single-mode:

      1) Attenuation (1310nm): 3.0dB / km

      2) Splice loss allowance: 0.05dB

      3) Reflectance allowance: less than or equal to -20dB

      4) Terminator loss allowance: 0.4dB

E. In addition to allowing 0.25dB loss per connector, losses exceeding 3dB per kilometer of Single-mode fiber will not be acceptable. All fiber technicians must be trained and certified by the fiber connector manufacturer. All connections must be inspected and approved by a certified representative of the fiber connector manufacturer.

2.08 FIBER CROSS CONNECT CABINET

A. The Contractor shall provide painted aluminum fiber cross connect cabinets to be bracket-mounted in PCM enclosures and rack-mounted in the control room network cabinet as shown on Control Network Architectures. The typical fiber cross connect cabinet shall have sufficient capacity to accommodate all fibers plus an additional 50% growth. It shall provide tie downs/strain relief for all incoming fiber, have a key-locked outer door and plastic caps for all unused ports. Cabinet door shall be constructed of aluminum (or other metal) and shall have a metal latch and lock. The Contractor shall provide fiber optic patch cables which meet the performance characteristics of the plant network fiber optic cabling. Single-mode, UL rated 50 micron fiber patch cables shall be obtained from the primary fiber optic cable manufacturer with terminators as detailed in paragraph 2.7-D. The Contractor shall provide all appurtenances necessary to complete a functional fiber run to the fiber transceivers via the fiber cross connect cabinet. The fiber cross connect cabinet shall be as manufactured by Optokon, Leviton, Blackbox or approved equal.

2.09 OPERATOR INTERFACE OPERATOR INTERFACES

A. **Operator interfaces:** Where indicated on the Control Network Architecture, the Vendor Package Supplier shall install an Intel processor based, panel-mounted, UL-listed operator interface unit suitable for browser-based applications and terminal server client access using the Windows CE operating system. The Nema 4X, 24Vdc panel-mounted unit shall be equipped with:

   1. 15-inch XGA (1024x768, 18-bit color) integrated, analog resistive touch-screen.

   2. Membrane keypad.

3. System Memory: 512MB of Flash Memory and 512MB of storage
4. User Memory: 80MB of nonvolatile memory
5. One RS-232 port.
6. Two USB 2.0 ports.
7. One Secure Digital (SD) card slot
8. Two 10/100-BaseT RJ-45 Ethernet port.

B. Unit shall be designed to operate in 0 to 55 degree C temperature range at up to 95% humidity, non-condensing. Each panel-mounted operator interface unit shall be as manufactured by Allen Bradley, PanelView Plus 7 1500 using FactoryTalk View Studio Machine Edition software with one licensed copy of Windows CE 6.0 installed. In addition, the unit t license shall be activated and tested, ready for secure web-share of the resident control screens. The unit shall be configured to operate on a star network as indicated on the Control Network Architectures.

2.10 SOFTWARE

B. **General**: All PLC programming, workstations, communication, and data gathering software shall be provided under provisions of Specifications Section 40 95 20 - PLC-BASED CONTROL SYSTEMS-SOFTWARE.

2.11 SPARE PARTS

C. PLC system spare parts shall be provided in accordance with Specification Section 40 91 00 - PROCESS CONTROLS AND INSTRUMENTATION SYSTEMS.

PART 3 — EXECUTION

3.01 INSTALLATION

A. The Contractor shall utilize personnel to accomplish, or supervise the physical installation of all elements, components, accessories, or assemblies which it furnishes. The Contractor shall employ installers who are skilled and experienced in the installation and connection of all elements, components, accessories, and assemblies it furnishes.

B. All components of the PLCS including all communication cabling shall be the installation responsibility of the Contractor unless specifically noted otherwise. The installation of the communication network (inclusive of the Vendor package systems) shall be the complete installation responsibility of the Contractor including all cables, connectors, transceivers, and any required electrical grounds. Grounding shall be shown on submittal drawings and/or the approved Vendor submittal drawings. After installation of the PLCS is completed, the installation shall be inspected jointly by the Contractor and the Equipment Manufacturer's representatives or the package Vendor representative. Any problems shall be corrected, and when both are

satisfied with the installation, a written certification of the installation shall be delivered to the Engineer. The certification shall state that all PLC communications, I/O modules, system grounds, communication networks, operator interface operator interfaces, workstations, servers, printers, and all other components of the PLCS System have been inspected and are installed in accordance with the manufacturer's guidelines, the Vendor requirements and the requirements of the Contract documents.

3.02 FACTORY TEST

A. **General**: Prior to the delivery and installation of the PLCS at the job site, but after the procurement, assembly, and configuration/programming of all components, the Contractor shall conduct a factory test. In identical fashion, each in-contract primary package Vendor (listed in 409100-1.1.D) shall also be required to conduct a factory test of the associated package PLCS. Tests shall be witnessed by representatives of the Owner and/or the Engineer. Each factory test is intended to be a complete PLCS. Factory testing shall demonstrate the functionality and performance of specified features of the PLCS. Each test shall include (as applicable) verification of all workstations, PLCs, operator interfaces and remote PLC systems I/O points along with their respective operator interface status and/or control displays. Each display shall be checked. A complete system checklist shall be available during the test for recording results of selected points. The Contractor shall also be responsible for coordinating witnessed factory testing of the Vendor packages as detailed herein.

B. **Test Setup**: The complete PLCS system as shown on, or referenced by, the Control Network Architectures shall be assembled and interconnected on the Contractor's factory floor. The interconnections shall include all communication cable segments for the individual PLC network and the workstation network to simulate as closely as possible the eventual job site installation. (Exceptions to this arrangement must be detailed in the Contractor’s submitted FAT plan and approved by the Engineer prior to FAT execution.) The PLC’s, PLC programming terminals, workstation, operator interfaces, and communication devices shall be loaded with their applicable software packages and configuration programming. PLC input and output modules shall be installed in their assigned housings and wired to field termination points in the enclosures. The Contractor shall have a complete and current set of wiring diagrams, a PLC register list, a workstation database list, and a listing of workstation displays for review throughout the test.

   Vendor package PLCS testing shall be conducted by the associated Vendor at the Vendor facility and subject to identical test setup and coordination requirements.

C. The Contractor shall schedule factory testing after receiving approval of the factory test procedures submittal. The scheduling effort shall include coordination of the Vendor factory tests to avoid scheduling conflict and ensure consistency in planning and execution. A written factory test coordination plan shall be submitted by the Contractor to the Engineer for review and approval at least 6 weeks prior to the start of the first test. The coordination plan shall include a complete schedule of factory tests with the test host contact name/number, location, start date, expected duration and schedule contingency. To support this segregated testing approach, the

CONTACTOR shall manage the following exchanges between all concerned parties at least 30 days prior to a scheduled FAT test:

1. Ship of typical drive and/or starter module to each Vendor package supplier as configuration reference and to support communication testing.
2. Shared I/O addressing or messaging block arrangements to support sharing of data between the Vendor and the Plant Integrator control programs. The factory test host will be expected to provide a test PLC or mimic application to support simulation of shared I/O necessary to allow full logic verification and scenario testing.
3. Share of control screen development standards, navigation schemes, system access control, handling of web-enabled devices and control-mode coordination (as established during the specification 409520 Graphics Meetings) to ensure that the Vendor package control screens seamlessly integrate into the Plant Integrator developed HMI system.
   a. Note: control mode coordination is specifically intended to address management of Vendor package control between the Vendor OIT and the Plant HMI.
4. Share of Ethernet switch configuration requirements and network addressing schemes (as established during the Network Coordination Meeting) to ensure seamless integration of Vendor network equipment and nodes into the plant control system network.
5. Share of each Vendor I/O list, alarm list and native screen inventory with the Plant Integrator.

D. **Test Procedure**: Each factory test shall be conducted in accordance with the previously submitted and approved test procedures. Test procedures shall include written descriptions of how individual tests shall be performed and shall incorporate testing the following features as a minimum (as applicable to supplied equipment). All testing shall be completed in one continuous factory test which may extend over several continuous days as necessary. The witnessing Engineer reserves the right to more closely examine any system, component or logic structure as necessary to confirm conformance with the contract requirements.

1. Communication: Verify all network components are able to communicate over the control system network using the contract required protocols and mediums. Proper configuration and operation of the Domain Server shall also be confirmed during this testing.

2. Power Failure: External power to each enclosure and workstation shall be cycled in order to test the operation of the UPS units. Backup power time period shall be verified to be in conformance with the project requirements.

3. Redundant Systems: Proper configuration and operation of the PLC processors, PLC power supplies, panel power supplies, operator interfaces and SCADA I/O servers and workstations shall be confirmed. This will include historical data construction in the event of loss of communications with, or failure of, the

Historian Server. Failure of any primary power supply should result in no detectable impact to PLC operation.

4. Software Applications: The primary software applications of each operator interface, workstation and server, as listed in Specification Section 40 95 20 PLC-Based Control System Software, shall be reviewed for proper installation and configuration and all link and software integration points confirmed through use of proxy machines (furnished temporarily by the FAT host – Contractor or package Vendor - to facilitate testing as necessary) and/or introduction of mimic test data. If applicable, the ability to upload and download files to the star network PanelView operator interface from the network will be tested with active I/O. Database templates shall also be reviewed to confirm adherence to contract requirements.

5. Web-based Displays: All web-enable equipment, including all operator interfaces, workstations and servers with Dell Open Manage installed, shall be verified for accessibility and proper configuration.

6. I/O Verification: All I/O terminal point wiring shall be verified for all PLC's. The FAT host – Contractor or package Vendor - shall provide a means of easily introducing a discrete or variable analog signal to all I/O points. In addition, a means of establishing communications with any field network device, using the contract required protocol, shall be demonstrated. Signals shall be verified at the associated PLC register and the operator interface.

7. Control Displays: The ability to enter new setpoints, vary control modes, and adjust control parameters shall be demonstrated. The lack of ability to change these items without the correct security level or control mode selection (as applicable to management of Vendor package controls) shall also be demonstrated. Confirmation of changes shall be obtained by checking appropriate PLC registers. Typical PID, VFD, actuator and motor-starter control faceplates shall also be tested. Custom interfaces and control logic for system processes shall also be reviewed in detail making use of tools employed under the I/O verification testing to observe PLC logic and control screen responses with respect to the Specification Section 40 93 00 control narrative descriptions and/or Engineer approved Vendor control narratives.

8. Display Screens: Incorporation of all approved submittal displays shall be confirmed. Overall quality and accuracy of the control screens shall be reviewed (based on the Graphics' Meeting minutes). Verification of all points on each display screen, and the ability to call up displays via point and click targets or function keys. The ability to print out a display screen shall also be tested.

9. Peripheral Equipment Verification: Contractor shall demonstrate that all equipment supplied is in proper working order without damage or defect. Setup and installation of all equipment with applicable accessories and appurtenances shall be as approved by the equipment manufacturer. Where computer based equipment is concerned, all of the following support functions shall be successfully demonstrated as applicable:

- DVD / CD Read/Write
- Printing to network printer
- All multi-media functions
- RAID Assembly (including removal of drives during operation, confirmation of continued operation and confirmation of proper rebuild following drive re-insertion

10. Remote Access Configuration and Security: The Contractor shall provide a means of temporary internet access via the Cisco Firewall Appliance. The laptops shall be used to remotely access the network via the firewall appliance VPN access module. The DMZ will be verified and the Cisco Firewall breach tested and configuration confirmed. Proper configuration of the server and/or the operator interface to support issue of license to a locally or remotely connected node exhibiting proper authorization shall also be tested. The security configuration, welcome screen, operator interface license links and concurrent license installation shall be reviewed in detail.

11. Alarm handling: Verification of alarm logging, summary display, outputs to horn/beacons and the ability to disable alarms. Silencing and acknowledging of alarms shall also be tested. Refer to the specification section 40 93 00 for any additional specified features.

12. Trend Displays: Pre-configured displays shall be checked for functionally including both historical and real time data and trend printing. A demonstration of the generation of a custom configured trend with all variables shall be performed. Historical collection and trending functions shall be verified at the SCADA I/O Server and Historian.

13. Reports: The test shall include auto-population, display and manual printing of pre-configured reports (as defined during the Report Meetings of specification section 40 95 20).

14. Ethernet Switch configuration tables, VLAN configuration and WAN / LAN traffic handling shall be confirmed. QDM configuration shall also be tested.

15. All components shall be individually inspected to confirm adherence with contract specification documents. Panel and panel equipment shall be inspected for appropriate installation, spacing, power, surge protection, grounding, cooling and labeling.

E. **Test Report**: The FAT host – Contractor or package Vendor - shall record the results of all factory testing on pre-approved test forms which the Engineer's representatives shall sign. A copy of the completed test forms and a report certifying the results shall be provided to the Engineer by the Contractor within 10 days of completing the test.

F. **Rework and Retest**: If the PLCS does not operate as required, the FAT host – Contractor or package Vendor - shall make whatever corrections are necessary, and the failed portion of the test shall be repeated. If, in the opinion of the Engineer's representative, the changes made by the FAT host - Contractor or package Vendor -

to effect such a correction are sufficient in kind or scope to effect parts of system operation already tested, then the effected parts shall be re-tested also. If a reliable determination of the effect of changes made by the FAT host - Contractor or package Vendor - cannot be made, then the Engineer's representative may require that all operations be re-tested. The Contractor shall bear all of its own costs for the factory test, including any required re-testing.

G. All of the Engineer's and Owner's travel and per diem costs for factory re-testing (inclusive of package Vendor re-testing) shall be borne by the Contractor.

3.03 CALIBRATION, TESTING, AND INSTALLATION

A. **Calibration**: All analog inputs and outputs of the PLC shall have their calibration checked at a minimum of 4 points to verify consistency with the balance of the analog loop. This calibration check shall be done in conjunction with the analog loop tests specified in Specification Section 40 91 00 - PROCESS CONTROLS AND INSTRUMENTATION SYSTEMS. Workstation / operator interface displays and PLC registers shall both be verified for correctness.

B. **Testing**: After the PLC installation has been certified and the analog points have been calibrated, the PLC shall be tested to verify that all discrete inputs and outputs of both the PLC system and the workstation are correct. All points shall be checked "end to end." For example, valve status inputs shall be checked by stroking the valve and a pump start output shall be checked by using it to start the pump. Simulated testing shall be allowed only when no practical alternative exists. Workstation / operator interface displays shall be verified for correctness simultaneously. An I/O checklist shall be used to record test results and a copy provided to the Engineer upon completion.

C. **System Testing**: When the PLC installation has been certified and analog loop calibration and discrete I/O testing have been completed, system testing shall be performed in accordance with the approved test procedures. System testing shall operate the various systems of the facility to verify compliance with all functional requirements specified, including the automatic control modes and PLC interlocks described in the control strategies contained in Specification Section 40 93 00 of this Specification. Tests which fail to demonstrate the required operation shall be repeated in their entirety or continued after corrective action has been completed at the discretion of the Engineer.

D. Each workstation / operator interface display including trend screens, reports, control screens, and alarm summaries and logs shall be verified for correctness during the system testing phase of this project. During system tests, the Contractor and package Vendor (as applicable) shall have a representative on site continuously who is capable of trouble-shooting and modifying the PLC system configuration programming.

E. The Contractor shall submit to the Engineer a system testing completion report when each process system, Vendor package and all aspects of the configuration software have been successfully tested as described herein. The report shall note any problems encountered and what action was required to correct them. It shall include

a clear and unequivocal statement that the control systems have been thoroughly tested and are complete and functional in accordance with all specification requirements.

F. **Start-Up Test**: The support detailed below shall be provided as part of the Work.

1. **Vendor Package:** For each Vendor package system, the Contractor shall be responsible for organizing start-up support to include the package Vendor start-up personnel, electrical and mechanical support personnel, the Engineer and/or the City of San Diego representatives – all as required during the start-up period to produce a fully operational system.

2. **Plant:** The Contractor shall provide start-up support to include the Instrumentation Supplier's personnel, electrical personnel, and the PLC system manufacturer's representative as required during the testing period to produce a fully operational treatment plant (inclusive of all Vendor packages).

G. **Performance Test:**

1. Subsequent to start-up, the Contractor shall conduct a successful 14 day final acceptance test for the entire PLCS system furnished under this contract. In the test, the entire PLCS (inclusive of Vendor packages) shall be continuously operated and maintained (i.e., 14 days continuous, 24 hours per day) during the test period with zero downtime resulting from system failures. If a system failure occurs, the 14 day test shall be considered a failure and not acceptable. The Contractor shall repeat the 14 day test. The PLCS system shall be acceptable only after all equipment and software has satisfied the performance test requirements.

2. If a component or software failure cannot be repaired/replaced within 2 hours, downtime resulting from any one or more of the following conditions shall be considered excessive and therefore a system failure:

   a. Downtime of any component (exclusive of I/O) whose failure results in the inability of the Operator to monitor and manipulate control loops from the associated workstation / operator interface using standard operator interface procedures.

   b. Downtime resulting from any I/O component failure.

   c. Downtime resulting from PLC processor failure.

   d. Downtime resulting from instrument failure.

   e. Downtime of any component/peripheral associated with the package communication network if the failed component

      1) Results in disabling or significant retardation of system communications

      2) Results in a disabling of the trending functions

NOTE: should an instrument fail, power supply fail or other redundant component fail but package operation is not impacted, the instrument and/or component must be replaced within 8-hours for a fail condition to be avoided unless a formal exception (in writing) is issued by the Engineer or Owner.

3. The Contractor shall submit a final performance test completion report which shall state that all contract requirements have been met and which shall include (1) a listing of all PLCS equipment maintenance/repair activities conducted during testing and (2) a listing of all components which were unable to operate successfully. Final acceptance, in writing, of the PLCS system shall be provided by the Engineer if the results of all of the performance tests are acceptable.

4. After acceptance of all required performance tests. The Contractor shall be responsible for furnishing the spare parts/tools on site (including those associated with the Vendor packages). All spare parts/tools stored on-site shall become the property of Owner upon completion of the guarantee period. The Contractor shall guarantee that the completed system shall perform all of the data acquisition, control/monitoring, and trending/reporting functions as shown and specified.

3.04 TRAINING

A. Instruction: The Contractor shall provide training for the purpose of familiarizing Owner's technical maintenance staff, with the use, maintenance, calibration, trouble shooting and repair of all components of the PLCS.

B. The training schedule shall be planned and organized by the Contractor in cooperation with Owner. The training shall be scheduled concurrent with the calibration, equipment testing, and process system testing phases of the project.

C. The training shall be performed by qualified representatives of the Contractor, the Manufacturer or the package Vendor as noted in the table below. Training shall be specifically tailored to this project and reflect the PLC system installation and configuration. The table below summarizes training hours required, which shall be provided as part of the Work. All training shall be conducted at the job site unless another location is approved by the Engineer and Owner. Travel and subsistence costs associated with offsite training shall be borne by the Contractor in support of the number of Owner personnel indicated.

Note: as the PLC hardware and control system software selected for project use represents Owner standard, training specific to hardware and software maintenance, development and troubleshooting will be deferred.

Training Classes Required		**Class (Hrs.)**	**Conducted By**
1	Plant HMI and PLC control programs – System Operation Details and Operational Theory (Engineering / Operations)	16	Contractor / Plant Integrator
2	Server – capabilities, limitations, security, configuration and maintenance (Engineering)	4	Manufacturer

Training Classes Required		Class (Hrs.)	Conducted By
3	Vendor PLCS Custom Programming (Engineering / Operations)		
3a	Control Screens – detailed review	4 (per Vendor)	Package Vendor
3b	Control Programs – detailed review	8 per Vendor)	Package Vendor
4	Plant system instrumentation maintenance, calibration, troubleshooting and repair (Operations & Maintenance)	8	Contractor
5	MBR Package system instrumentation maintenance, calibration, troubleshooting and repair (Operations & Maintenance)	8	Package Vendor
6	RO Package system instrumentation maintenance, calibration, troubleshooting and repair (Operations & Maintenance)	8	Package Vendor
7	UV-AOP Package system instrumentation maintenance, calibration, troubleshooting and repair (Operations & Maintenance)	8	Package Vendor
8	MF Package system instrumentation maintenance, calibration, troubleshooting and repair (Operations & Maintenance)	2	Package Vendor

C. Each training class shall be a minimum of 2 hours in duration. Separate classes shall be conducted for Owner's engineering personnel, operating personnel and maintenance personnel.

1. Engineering classes shall stress custom program architecture and flow, recommended modification methods, identification of reserved control points, screen controls and other technical aspects of the custom programs and screens developed to support system operation.

2. Operator classes shall stress operational theory and use of the PLCS.

3. Maintenance classes shall stress control panel / equipment / instrument maintenance, calibration, troubleshooting and repair.

4. Each of the training classes listed shall be conducted twice during separate weeks to allow for scheduling of Owner personnel.

E. The training classes shall be scheduled a minimum of 3 weeks in advance of when they are to be given. Proposed training material, including a resume for the proposed instructor(s) (indicating previous instructional experience) and a detailed outline of each lesson shall be submitted to the Engineer at least 30 days in advance of when the lesson is to be given. The Engineer shall review the submitted data for suitability and provide comments that shall be incorporated into the course. Final materials will be provided at least two weeks in advance of the training sessions.

F. The Contractor will be required to keep a record of all training classes. Within 10 days after the completion of each class the Contractor shall present to the Engineer the following:

1. A list of all Owner personnel that attended the class.

2. An evaluation of Owner personnel that attended the class via written testing or equivalent evaluation.

3. A copy of the hard copy text utilized during the class with all notes, diagrams, and comments. This documentation shall be contained in the Training Manual.

G. Owner reserves the right to record any or all portions of training performed for future usage.

H. The Contractor shall provide (1) days services of a PLC factory representative to certify the PLC system.

I. The Contractor shall provide (15) days services of a trained (and Vendor certified as appropriate) PLC programmer and HMI developer to make modifications to the process logic and HMI screens (inclusive of Vendor packages) up to 90 days after final acceptance.

3.05 LADDER LOGIC DOCUMENTATION

A. All PLC ladder logic shall be fully annotated by providing a descriptive label for all relays and function blocks and functional description of each rung.

END OF SECTION

THIS PAGE INTENTIONALLY LEFT BLANK

SECTION 40 95 20

PLC-BASED CONTROL SYSTEMS SOFTWARE

PART 1 — GENERAL

1.01 THE REQUIREMENT

A. **General**: The Contractor shall furnish, supervise installation, assemble, configure, program, and place into service the PLC-based control system, hereafter called the PLCS System, specified under this Section and in Specification Section 40 95 10 - PLC-Based Control Systems Hardware, all in accordance with the requirements of the Contract Documents.

1.02 REFERENCE SPECIFICATIONS, CODES, AND STANDARDS.

A. PLCS software reference specifications, codes, and standards shall be provided in accordance with Specification Section 40 91 00 - PROCESS CONTROL AND INSTRUMENTATION SYSTEMS.

1.03 CONTRACTOR SUBMITTALS

A. **Shop Drawings**: PLCS submittals shall be in accordance with Specification Section 40 91 00. PLCS software submittals shall, however, be made separately from other process control and instrumentation system submittals.

B. **Software Submittals**: The software submittal shall be a singular all-inclusive submittal which shall include but not be limited to:

1. Complete description of the standard application software programs, operating system and utility programs to be furnished, including modifications and explanation of how the specific functional requirement will be met. A cross reference between the specification and the software submittal shall be provided to allow the Engineer to clearly identify how each specified section or function is being met by the Contractor.

2. A complete set of all available software algorithms with:

   a. Individual coil register and variable description.

   b. Subroutine, Rung, Program, and Program Group with complete detailed comments.

   c. Memory, coil, register and variable usage mapping.

   d. Source Code of all High-Level Program Language Modules specifically created by the Contractor for this project.

3. A complete set of control strategies which depict all monitoring and control functions on a loop-by-loop basis.

4. An English language narrative of each data acquisition or control loop mission and anticipated action. Narratives shall enumerate the signal point name, signal description, associated PLC number, associated graphic displays, and system functions activated by the signal (i.e., interlocks, alarms, logs, etc.).

5. A complete set of module configuration sheets depicting each loop linkage.

6. A complete listing of the PLC database for each data point with relevant parameters such as range, active state, contact orientation, limits, incremental limits, I/O card slot number and rack number, I/O hardware address and PLC assignment. The list shall be divided and grouped by PLC, and divided into type of I/O. In addition to the active I/Os, the list shall also include implemented spare I/Os. Final format shall be approved by the Engineer.

7. Detailed descriptions of procedures used to implement and modify control strategies and data base construction (at the PLC, HMI and DMS levels) as well as program revision and access control management.

8. One complete set of all workstations accessible displays which are unique to this project. These displays shall be letter size, color graphic, hardcopy images arranged in hierarchical order.

C. **Display and Report Submittals**: After all software submittals required herein have been approved by the Engineer, the Contractor shall submit the following items. Favorable review and implementation of these submittals is required prior to the start of system testing (i.e. the PLCS must be operational prior to any process system test).

1. All workstation display submittals (both graphic and trend displays) shall be in full color as they will appear on the HMI display. This submittal shall be prepared after the requisite Graphics Meetings specified in this Section.

2. Each display shall be uniquely titled. Locations for process data shall be clearly identified either through the use of simulated data or by showing variables on the displays and providing a reference list describing those variables. All dynamic points shall be identified by tag number as a minimum and their operation shall be described on separate sheets (color change, symbol change, etc). Three sets of submittals (with screen prints in color) are required for review by the Engineer. One set will be returned with comments.

3. All periodic reports for the entire PLCS system. Locations for process data shall be clearly identified, either through the use of simulated data or by showing variables on the report and providing a reference list describing those variables. Three set of reports shall be submitted for review by the Engineer. One set will be returned with comments.

D. **Additional Requirements**: The following items shall be submitted with the final sets of Owners Manuals required 15 days prior to the plant operational test.

1. All software specified in this Section.

2. All program manuals supplied by the manufacturer(s) with the standard software packages.

3. All original program disks and/or CD's supplied by the manufacturer(s) with the standard software packages, including any program revisions or updates issued by the manufacturer(s) during the construction period.

4. All PLC program and workstation configuration program files stored on labeled compact disks. The PLC program and workstation configuration file disks shall also be updated as required if any changes or corrections are required in the programming prior to project completion.

5. A change of ownership registration form for each standard software package supplied under this project to allow the City to register the software with the manufacturer.

E. **Operations Reference Manual**: The Contractor shall prepare and submit an Operations Manual for the workstation system for use by the plant operators. This manual shall be a white view binder and shall contain the following:

1. An index to the manual.

2. A list of workstation display screens, trends, and reports, with display name and description.

3. A list of the control screens with the display names and description. It shall also provide a summary of possible commands and operator inputs to these screens including setpoints. All control actions shall be included.

4. A PLCS block diagram with names and locations of major components.

5. Instructions for manually printing screens or reports, both real time and historical as applicable.

6. A summary of security levels and their privileges and limitations.

7. Spaces for operators to make notes.

8. A copy of this manual shall be provided to each operator during training on the workstation operations. The training class shall include a review of this manual with the operators in addition to more detailed instruction on the workstation configuration and its use.

9. A fully searchable electronic version of the manual (in Adobe.pdf format) with all contents listed above shall be integrated into the control system HMI. Access shall be made available under a help index.

1.04 MANUFACTURER'S REPRESENTATIVE

A. PLC-based PLCS software manufacturer's representative services shall be provided in accordance with Specification Section 40 95 10.

PART 2 — PRODUCTS

2.01 GENERAL

A. This Section covers the furnishing of standard and customized software fully installed and configured in the control system specified herein. It is the intent of this Specification to have the Contractor furnish the latest generation, standard, field proven, fully debugged and supported PLC software package for this application with a minimum of additions or changes. Customized or specially written software shall be furnished if required to meet all of the functional requirements specified herein. Any custom applications software required shall be fully integrated into the basic software and shall not require unique command structures. No attempt has been made to list all software or list all characteristics of software required by the instrumentation supplier to meet the functional requirements specified herein.

1. Software specified herein is described in broad, functional categories. The instrumentation supplier shall furnish a complete software package including the functional requirements specified herein along with whatever additional software is required for proper and efficient operation of the PLCS System.

2. The software package shall provide a system capable of controlling system level activities and a higher level process control language allowing the operator to monitor and control the process through an interactive human interface. The software environment shall support a multi-programming atmosphere allowing concurrent execution of more than one program in a background/foreground mode or multi-tasking mode.

3. Throughout the execution of all software modules, the operator shall be presented with all of the command or operation choices available at that point in the program using sufficient verbiage or symbols to make the choices self-explanatory and unambiguous. Question and answer or fill-in-the-blank requests shall only be permitted where file names, tag names, or other unique text or numerical information is required.

2.02 HARDWARE

A. **General**: All PLCs, remote I/O systems, workstations, communication equipment, etc., shall be provided under provisions of Specifications Specification Section 40 95 10.

2.03 PLC SOFTWARE

A. **PLC Programming Software**: All PLC programming shall be accomplished using a standard IEC-61131-1 compliant software package developed for this purpose. The software package shall be installed on the hard disk of the PLC programming terminal and workstations, as detailed in the contract documents. The PLC programming

software shall be compatible with Windows CE (v6.x), Windows 7 Pro SP1 (32-bit or 64-bit), Windows 11 Pro (32-bit or 64-bit) and 2016 Server Standard Edition (64-bit).

1. All programming, monitoring, searching, and editing shall be accomplished using this PLC programming software. It shall be usable while on-line (connected directly to the PLC or indirectly via the control system network), off-line and in the emulation mode (no PLC required). The PLC programming software shall display multiples of series and parallel contacts, coils, timers, counters, and mathematical functions blocks. The software shall be able to monitor the status of all inputs, outputs, timers, counters, and coils. It shall have the capability to disable/force all inputs, outputs, and coils to simulate the elements of the ladder logic by means of color change. It shall include a search capability to locate any address or element and its program location. PLC status information, such as error indication and amount of memory remaining shall be shown on the display screen.

2. The PLC programming software shall have the capability to generate a PLC program printout which is fully documented. Fully documented program listings shall have appropriate rungs, address, and coils shown with labels, descriptors and identifiers. Comments shall clarify to a reader what each segment of the program accomplishes. A fully documented listing shall also include a cross reference report of program addresses.

3. The PLC programming software package shall be able to monitor and/or control PLCs via the communication network. It shall contain diagnostics to collect troubleshooting and performance data and display it in easy to understand graphs and tables. It shall also monitor devices at each drop on the communication link for proper communication.

4. The PLC programming software shall be capable of generating an I/O database that is fully compatible with the contract specified HMI system software such that one database can serve both programming levels without replication. OPC links shall be fully supported.

B. **System Level Software**: System-level software shall include a complete and unmodified operating system furnished by the Contractor that provides system-level functions as specified herein. Operating system software shall function automatically without operator intervention, except as required to establish file names and similar information. System-level software shall include a real time operating system, a calendar/time program, a file management program and a system of diagnostic routines in addition to any compilers, editors, loaders, or assemblers required to support the PLC software.

1. Operating System Software: The real-time operating system software shall be the standard uncorrupted product of the PLC and shall provide the following minimum functions:

   a. Respond to demands from a program request.

   b. Dynamic allocation of the resources available in the PLC. These resources shall include main memory usage, computation time, peripheral usage, and I/O channel usage.

c. Allotment of system resources on the basis of task priority levels such that a logical allocation of resources and suitable response times are assured.

d. Queuing of requests in order of priority if one or more requested resources are unavailable.

e. Resolution of contending requests for the same resource in accordance with priority.

f. Service requests for execution of one program by another.

g. Transfer data between programs as requested.

h. Management of all information transfers to and from peripheral devices.

i. Control and recovery from all program fault conditions.

j. Diagnose and report real-time hardware device errors.

2. Program Execution: Program execution shall be scheduled on a priority basis. A multilevel priority interrupt structure is required. A program interrupted by a higher priority program shall be entered into a list of pending programs. Its execution shall be resumed once it becomes the currently highest priority program. The system shall allow periodic programs to be scheduled. The allocation of resources to a time scheduled program shall be based on its relative priority and the availability of computer system resources. Initiation of programs shall, as a minimum, be activated in the following ways:

a. In response to external interrupts.

b. At a scheduled time of the day.

c. On an elapsed time interval basis.

d. On request by another program.

e. On request from the data access panel.

C. **Operator Control**: All programming commands related to changing system configuration or controlling field devices shall be performed only through the HMI and shall require more than one keystroke to protect against inadvertent operations. The PLC configuration commands shall require operator confirmation of a requested action before any change is made. This shall apply to changes in the algorithms, control sequences, and similar configuration related actions, as well as file copy and file delete commands. For any sequence requiring operator confirmation, the operator shall be able to cancel the operation at any point prior to executing the command.

D. **Reboot Operation**: The PLC shall reload the most recently entered control and alarm setpoints from battery backed RAM. Changing these setpoints or alarms shall require operator action. Rebooting a workstation shall not change these alarms or setpoints.

2.04 WORKSTATION AND HUMAN MACHINE INTERFACE (HMI) SOFTWARE

A. **General**: Complete software packages shall be supplied and installed, one on each of the workstations. The software package shall be a standard commercially available product. The Contractor shall be responsible for supplying sufficient development, configuration and run time packages, PLC driver packages, network packages, printer driver packages, report generation packages, and relative and historical trend packages to meet all PLC requirements.

1. The system shall provide a mechanism for accepting configuration input either directly from the keyboard, via a mouse, or as appropriate, indirectly through ASCII or MS Excel-based files that are created by an external text editor or relational database program.

2. Source code modifications, re-assembly or recompilation must not be required for implementing user-level system changes.

3. All configuration changes shall be capable of being made on-line, while the system is operating. Data definitions, operator displays, etc. shall be capable of being modified, added or deleted without having to interrupt the data acquisition.

4. The system shall provide complete user documentation, including examples of how to operate the various modules within the system. An on-line "help" facility, based upon Windows standard Hypertext, shall provide useful, context-sensitive information on the operation of the package. This help facility shall be capable of being invoked on-line through a point-and-click operation.

5. The system software shall be provided in different licensed sizes to meet various application needs. Licensed product sizes shall be as defined by the manufacture but will include an option for an unlimited IO count. These systems shall be able to display data from and write values directly to other nodes without the need to duplicate the data in the local system.

   Configurations that are not attached to I/O and do not contain tags shall also be available. These systems shall be available with two types of rights to a tag:

   a. With rights to read and write to tags in other nodes.

   b. With rights to only read tags from other nodes.

   c. Access rights shall be as established in the developer accessible software security settings.

B. **Data Handling Capabilities:**

No programming, compiling or linking shall be required to configure the system. The database tags must be configurable on-line. The new function and database tag assignments can be added while the system is performing data acquisition and control operations.

The process database containing the current value of the data, or tag list, shall be memory-resident and of a design that is appropriate for real-time monitoring and control functions. Its design shall be optimized for speed, memory usage, data integrity and system security. Floating-point arithmetic shall be used in all calculations. This database shall be stored as a standard Windows file on the local or network hard disk and, upon starting the system, this database is loaded into the computer's memory. Only computers physically connected to information network shall require a database.

1. Data Integrity: The software shall provide pre-emptive multitasking to ensure that common Windows actions do not interfere with I/O communications, processing of data, alarming, and the integrity of the real-time and historical data. These common Windows actions include moving a window with a mouse, opening a file, accessing the hard disk, or printing a graphic display.

    a. Data Integrity: The software shall provide pre-emptive multitasking to ensure that common Windows actions do not interfere with I/O communications, processing of data, alarming, and the integrity of the real-time and historical data. These common Windows actions include moving a window with a mouse, opening a file, accessing the hard disk, or printing a graphic display. The software shall be written fully 32-bit or 64-bit so that it runs native in the furnished operating system. Use of emulation software code to achieve compatibility is not permitted.

2. Database Tag Configuration

    Various input/output hardware assignments, as well as processing functions, shall be assigned to named tags or "function blocks". Multiple tags can be tied together to perform more complex functions. During the configuration process, the program shall be capable of checking the tag structures for correct linkages, appropriate names, and so on. The scan processing program shall also be capable of detecting and handling configuration errors at run-time. Any errors encountered shall generate messages to the user.

    The user shall be able to perform tag configuration (adding, modifying, deleting, and viewing) in several ways, as follows:

    a. Directly from the graphics editor, so that tags can be configured as graphics are developed.

    b. Via an interactive spreadsheet-style database builder program that uses a fill-in-the-blank menu methodology. The database builder program shall provide the following editing functions:

        . Cut/Copy/Paste tags
        . Duplicate tags

. Generate multiple tags from a given pattern
. Sort tags
. Query tags
. Display tags in user-configurable formats

c. Via the importation of an ASCII or MS Excel-based file developed in another program as input for tag creation. The database builder program shall also be able to export the current tag listing for modification by the external program.

For methods b and 3 above, the development of the database tags shall be completely independent of the creation of graphics displays. Use of a programming language, such as C or a C-like language, shall not be required.

3. Database Tag Types

Functions shall be available in the database to support the following tag types:

a. Analog Input. This reads an analog value (time, temperature, speed, pressure, level, etc.) either directly from an A/D converter or from a register within an I/O device such as a programmable controller, and automatically scales the raw data to engineering units (seconds, revolutions/minute, pounds/sq. in., degrees, etc.)

b. Analog Alarm. This provides enhanced alarming capabilities to the Analog Input, including alarm suspension, remote acknowledgment, delay time, re-alarm time, close a contact based on an alarm condition, etc.

c. Analog Output. This writes an analog value (setpoint, output, speed, etc.) either directly to a D/A converter or to a register within an I/O device, such as a programmable controller.

d. Analog Register. This accesses multiple analog I/O points for read or write functions with a single I/O tag. The number of addresses is dependent upon the I/O device used.

e. Boolean Logic. This tag-type takes up to eight (8) inputs, typically logical or digital values, and performs Boolean arithmetic on them. The result can then be passed to or used by other tags or applications within the system. The operators must include:

. OR
. AND
. EQUAL
. NOT EQUAL
. NOT
. XOR
. NAND
. Parentheses and other reserved symbols

f. Calculation. This tag-type takes up to 8 variables or constants and performs an arithmetic calculation on them. The result can then be passed to or used by other tags or applications within the system. The operators must include:

. Add
. Subtract
. Multiply
. Divide
. Parentheses and other reserved symbols
. Absolute value
. Square root
. Exponentiation
. Natural log
. Base-10 log
. Relational operations (greater than, less than)
. Change floating point values to integers

g. Device Control. This supports 16 digital inputs and 8 digital outputs, each with random (i.e. not necessarily contiguous) addresses. A set of statements within the tag shall provide the ability to perform pattern checking, interlocking, and timing.

h. Digital Input. This senses the logical on/off state of a switch, relay, pushbutton, etc. either directly from the I/O hardware or from a bit within the memory of an I/O device, such as a programmable controller. The value shall be displayed in a user-selected format (0/1, open/close, false/true, etc.)

i. Digital Alarm. This provides enhanced alarming capabilities to the Digital Input, including alarm suspension, remote alarm acknowledgment, delay time, re-alarm time, close a contact based on an alarm condition, etc.

j. Digital Output. This sets a logical on/off state in an output relay either directly in the I/O hardware or in a bit within the memory of an I/O device, such as a programmable controller. The value shall be accepted in a user-selected format (0/1, open/close, false/true, etc.) The Digital Output tag must also provide output-reverse handling and the ability to specify an initial cold-start position.

k. Digital Register. This accesses multiple digital I/O points for read or write functions with a single I/O tag. The number of addresses is dependent upon the I/O device used.

l. Event Action. This tag-type monitors the value or alarm conditions of an I/O point and, based upon TRUE/FALSE conditions, performs one of two operations. These operations include starting or stopping the processing of another tag or opening or closing a digital point.

m. Fanout. This tag passes the value it receives to up to five tags within the same database.

n. Multi-state Digital Input. This tag combines up to three (3) digital values and outputs a value of 0-7 based upon the status of the values in sequence (000 = 0, 001 = 1, 010 = 2, 011 = 3, 100 = 4, 101 = 5, 110 = 6, 111 = 7).

o. Program. This function provides the user with a procedural language for sequencing, monitoring, and controlling typical process operations, including:

- If/Then go to another step
- Wait until a process condition occurs
- If time-out go to another step
- Go to another step
- Set a tag to a value or the value of another tag
- Open/Close a digital tag
- Set Auto/Manual status of a tag
- Set On Scan/Off Scan status of a tag
- Add/Subtract a value to/from a tag
- Print a message
- Call other program blocks as subroutines
- Run other program blocks in parallel
- Stop other program blocks
- Pause or delay a number of seconds
- Play a sound file (.mp3, .wav, .wma, etc.)
- Run an executable program

p. The current step being processed must be capable of being displayed on the operator's HMI display. In addition, a debug mode shall be provided to facilitate program checkout.

q. Real-time Trend. This tag shall take as its input an analog or calculated value and save up to 600 values. Averaging of accumulated input values will be provided to extend the amount of time represented by the trend block. The data within the tag can be graphically depicted on operator displays.

r. Text. This function reads or writes text of up to eighty (80) characters from or to a device.

s. Timer. This tag performs a counting operation. It counts in either the up or down direction, from a pre-set value to a target value. Upon reaching the target or time-out condition, a contact may be closed. This tag also supports conditional next block processing. It shall time up to one (1) year. The timer may be started, stopped, reset or resumed based on a sensed condition or operator command.

t. Totalizer. This tag-type maintains a floating point total for values passed to it from other database tags.

u. SQL (Structured Query Language) Package. This package shall consist of two (2) database tag-types, the SQL Data and SQL Trigger, which facilitate the transfer of information bi-directionally between the data acquisition system and a relational (or other) database management system. It shall

utilize Microsoft's Open Database Connectivity (ODBC) for connection to the external ODBC-compliant database. The capability to transact among multiple databases and multiple rows within a database is required. Also, "Stored Procedures" shall be able to be invoked in the relational database.

In the event that the database server is "down" (not available) at the moment that a query is executed, the system shall provide a built-in capability to back up the data to user-definable primary or secondary hard drives. The system shall automatically detect when the database server comes back on-line, and, at that time, shall execute all of the transactions that it has backed up.

. SQL Data. This tag defines the data which is to be transferred between the data acquisition system and the relational database, and also, the direction of information flow.
. SQL Trigger. This tag defines the conditions (triggers) under which the transfer of data will take place.

v. Statistical Process Control Package. This package shall consist of database tags and display support to provide statistical charts, statistical alarm detection, and process control. The functions shall include:

. Pareto. This tag-type will accept up to eight (8) inputs and will sort these inputs and their associated descriptors in one of the following ways: ascending, descending, none. This function is used to generate a Pareto chart, which could, for example, show numbers of manufacturing defects and reasons for those defects.

. Statistical Data. This tag will take its input either manually (from the operator's keyboard), automatically (from a sensed input elsewhere in the system) or externally (from another program). It must provide the following types of alarms whenever:

* A user-configurable number of consecutive X-bar values is outside the control limits.
* A user-configurable number of X-bar values is outside the warning limits (67% of the control limits).
* A user-configurable number of range values is outside the control limits.
* A user-configurable number of consecutive ascending or descending X-bar values occurs.
* A user-configurable number of consecutive X-bar values is above or below the control limits.
* Not enough (user-configurable) X-bar values cross the X-axis (non-randomness).

. Statistical Control. This takes the output of a statistical data tag (the X-bar value) and applies rate and deviation factors to calculate an adjustment to

a specific process variable. In this mode, the block performs control based on statistical inputs.

. Histogram. The histogram function provides a means of displaying on the HMI display the number of occurrences of X-bar.

4. Tag Attributes
   a. Each tag will have an instrumentation tag name of up to 30 characters. The name shall be alphanumeric. All other application programs will use this tag name as their sole reference to the data element assigned.
   b. For tags assigned to actual hardware points, they shall also contain fields for:

      1. Hardware device name
      2. Hardware address
      3. Hardware specific parameters
      4. Signal conditioning requirements

   c. Simulation tags can also be created that receive their values from the operator's keyboard, other internal calculations, or other programs.

   d. Tags shall be processed periodically, with the fastest scan rate being no more than fifty (50) milliseconds. Scan rates shall be able to be set independently for each appropriate tag. Longer scan rates of up to once per twenty-four (24) hours shall also be supported. A mechanism for load-leveling, or phasing, the time-based processing of tags is also required.

   e. Alternatively, the user may elect to have tags processed on an exception basis. This choice shall be allowed on a tag-by-tag basis.

   f. Also, any input tag may be configured as a “one-shot”. This will cause it to fetch the value from the I/O device just one time when the system is started or the tag is brought on scan.

   g. Each tag associated with a hardware address or capable of causing an alarm condition shall have a means of displaying a descriptive message on the alarm printer. The descriptor shall be at least 40 characters in length.

   h. The system shall provide built-in signal generators, including sine curves and random numbers that can be used for process simulation purposes.

5. Counting of Tags in sized systems

   a. For the smaller systems with a limited number of tags, only the following primary blocks are counted towards the I/O limit:

Analog Input	Digital Input
Analog Alarm	Digital Alarm
Analog Output	Digital Output
Analog Register	Digital Register
On-Off Control	Device Control

Text Block Multi-state Digital Input Block
Custom written Tags that address I/O points

b. Only the blocks listed above are to be counted. *T*here shall be no need to include tags located in other nodes nor tags that are calculated points.

C. **I/O Device Communications**

1. The system must support communication with a variety of external input/output (I/O) devices. The devices that can be interfaced to the system must include:

. Programmable logic controllers (PLCs -- interfaced via serial communications or PLC vendor-supplied interface cards)

. Intelligent single-loop controllers

. Distributed control systems (DCS)

. Analog-to-digital converters

. Remote I/O

2. The system must be capable of supporting up to four (4) different types of device communications drivers and up to eight (8) serial ports simultaneously.

3. Driver Configuration

a. The communications driver shall be configurable on-line. When supported by the I/O device (typically programmable controllers), block transfers (the ability to acquire multiple variables in one communications request) must be provided. The block sizes and poll times must be individually adjustable by the user. Supported block transfer times vary depending upon the I/O device, but shall be able to run as fast as the I/O device can transfer data. Alternatively, exception-based processing may be optionally selected. In some cases, the vendor may provide support for the use of unsolicited messages, if supported by the I/O device.

b. For serial or complex devices, the configuration process shall be interactive and use menus to select (depending on the device):

1. Baud rate (if applicable)
2. Reply time-out time (with 0.1 second resolution)
3. Station address of device (if applicable)
4. Block transfer base address and size (if applicable)
5. Block interrogation rate

c. The hardware address format that the user enters at configuration time will correspond with the address format employed by the I/O hardware vendor.

d. The use of Microsoft Windows Dynamic Data Exchange (DDE) will be limited to inter-Windows applications data exchange – and only when no other viable option exists. External device communications shall be supported by the Vendor developed Windows driver or OPC links. Use of DDE for external device communication (e.g. PLCs or other similar devices) shall not be permitted.

4. Display-only Communications

To facilitate more efficient communications with programmable controllers, the system must be able to provide display-only communications. Communications to read or write tags (Analog Registers and Digital Registers) will only be established when a graphics display containing these tags is open. When the display is closed, communications will cease.

5. Error Detection and Recovery

a. Wherever possible, the device communications program will perform error checking on messages. These error checks will include lost response (time-out) and data error (checksum, LRC, CRC, etc.).

b. Should communications errors be detected, the software shall automatically indicate that the data (on graphic displays, in historical files, etc.) is no longer valid and shall replace the invalid data with other characters. The system shall automatically attempt to re-establish communications, and, if successful, shall then replace the characters with valid data. These capabilities shall be built-in to the software and shall not require any user programming or other actions to implement.

c. Failover to a user-configurable back-up port shall be provided as a standard function of the driver. This capability shall, for example, cause the software to automatically attempt to establish communications between the computer and the I/O device via COM2 when it has determined that the connection via COM1 has failed.

6. Diagnostics

The system will provide a diagnostic program capable of running on-line or off-line that can monitor message rates from the communication program. The diagnostic will display the number of new messages, retries, time-outs, and any occurrences of error.

For serial drivers, a built-in datascope shall be provided. This datascope function shall allow the user to observe the messages being sent between the computer and the I/O device.

7. I/O Driver Toolkit

A toolkit must be available which will allow the creation of I/O drivers by end users, system integrators, and others. The programming language used will be Microsoft C or C++.

D. **Stand-Alone Operation**

1. Without Networking: In non-networked applications, the software shall be capable of performing all desired functions (data acquisition, graphics, trending, reporting, etc.) within a single computer.

2. Networking

   Should the user elect to create or extend the network at a later time, all that shall be required is to connect each computer to the local area network, and enable the networking functions within the software. Neither reconfiguration nor duplication of database tags shall be required to make data available to other nodes that require access to it.

E. **Networking and Distributed Operation**

The system must have a distributed, client/server system architecture. This architecture will employ a local area network (LAN) as the method for communicating among stations. Each computer may be assigned one or more tasks. For example, computer "A" may be used simply for graphic display, computer "B" may be connected to a programmable controller and used for data collection, and computer "C" may be used both for display and data collection.
Configurations shall be available that provide complete functionality, others that provide read/write access to the data (but do not perform I/O communications themselves), and still other information nodes that provide read-only access to all data on the network.

Data shall be available to all computers and individuals on the network that have been provided access. Real-time data shall be available directly across the network from the computer that acquired it from the process hardware. Configurations that require each computer to contain copies of database tags it needs to access are not acceptable.

The system shall be configured such that the failure of any one computer will not affect the operation of others on the network. The failure of all workstations shall not affect the control and operation of the plant. It is recognized that data contained in a failed machine will be unavailable to other machines requesting it. However, the system shall offer the provision for re-starting or re-configuring other stations to take over.

1. Configuration and Expansion

   The system will provide an on-line installation and configuration program for configuring the various computers on the network. This configuration program will allow assigning unique node names to each computer as well as selecting the functions that the machine will perform.

   The system will allow additional computers to be added to the network while on-line, without disrupting the operations of the other machines.

2. Local Area Network (LAN) Architecture and Use

The system shall be capable of supporting the following network configurations: Network Adapters:

. Ethernet

Network Protocols:

. TCP/IP

The vendor shall provide specific details as to the manufacturers and model or version numbers of currently supported adapters and protocols upon request.

The system must provide session-oriented communications for data transfer. Each computer station must be capable of establishing up to 100 sessions with other stations.

The system must also be capable of running simultaneously with other LAN users who are not operating the data acquisition system software (but who might be using a LAN manager or file transfer software).

The application program interface used by all system program modules and by user-written applications shall make MMS-like (Manufacturing Message Specification) Variable Access Service function calls.

3. Error Detection, Recovery, and Diagnostics:

The system must provide on-line diagnostics that display the current status and operation of the local area network and its nodes. The diagnostic display must include the LAN adapter status for the machine showing the display, as well as the current number of messages, errors and retries.

An additional display will show the current session status (established, pending, and off-line) of all stations on the network. A session monitor program that automatically monitors and recovers communications must be supplied with the system.

Should network communication errors be detected, the software shall automatically indicate that the data (on graphic displays, in historical files, etc.) is no longer valid and shall replace the invalid data with other characters. The system shall automatically attempt to re-establish communications, and, if successful, shall then replace the characters with valid data. This capability shall be built-in to the software and shall not require any user programming or other user-dependent actions to implement.

4. Remote Access

a. Via the Network

The system shall have the capability of creating and modifying tags in one node by operating the graphics editor or database builder program in another node. This operation shall be performed on-line, while the destination node is operating. This new or modified tag data shall immediately be available to all other nodes on the network. The security system will restrict access to the database to authorized users.

b. Via Modems

Similarly, configuration shall also be available via a computer connected remotely via modems. When a remote computer is connected via a (secure) network modem (offering sufficient bandwidth), the user shall have the same access as though they were at a computer directly attached to the network. The following functions shall be supported:

. Configuring the database tags throughout the network
. Viewing graphic displays being updated with real-time data
. Viewing historical trend data
. Copying files from/to the network

F. **Graphic Capabilities**

The graphics package must provide a means of creating and displaying color graphic displays that will be used by the operator to monitor and control the process. Real-time values being read from the field devices shall be capable of being displayed in a variety of user-configurable formats.

Graphic display files may be stored on the system disk, virtual (RAM) disk or networked file server as may be dictated by the software file structure. There shall be no limit (other than physical disk size) to the number of displays that can be developed and accessed on-line.

The development and runtime graphics packages must both be multi-document architecture applications with the capability to each support up to ten (10) open displays simultaneously minimum.

HTML5 file formats shall be supported to allow displays to be viewed on larger or smaller (e.g. portable device) screens without corruption or degradation. For smaller screens where wireless access protocol (WAP) format has not been employed, scroll bars shall be provided to allow the user to move to other areas of the display as appropriate.

1. Graphic Creation

The system shall provide an interactive object-oriented editor that allows creation of graphic displays using a pointing device (for example, a mouse).

A facility shall be provided that quickly toggles, via a mouse click or hot-key, between the graphic building and graphic runtime modes to speed display animation verification during the development process.

The software must be designed with the ability to make changes to the graphics while the system is running. Shutting down the system shall not be required to make changes.

2. Color Support

The graphics package shall provide support for an unlimited choice of colors with 256 colors supported at any one time. The user shall have the ability to create, save, and restore custom color palettes.

3. Graphic Toolbox

The system must provide a configurable toolbox that the graphics developer can customize as to what tools it contains and their position in the toolbox can be changed with the mouse.
The Toolbox itself needs to be a Window where its shape, size and location can easily be changed with the mouse.

The toolbox shall contain a method to describe the function of each tool when the mouse cursor is positioned on a particular tool.

Once configured, the state of the toolbox shall be automatically saved when the drawing session is completed. It shall be returned to that same condition when the next drawing session is started.

a. Graphic Objects

At a minimum, the following object drawing tools must be supported:

. Rectangle/Square
. Oval/Circle
. Line
. Polyline
. Polygon
. Text
. Graphic Development Operations

Operations that may be performed on objects or groups of objects must include the following:

. Select/Select All
. Deselect/Deselect All
. Change Color
. Move
. Nudge (move a single pixel at a time)
. Cut
. Copy
. Paste
. Clear

- Duplicate
- Group/Ungroup
- Align (left, right, top, bottom, vertical center, horizontal center)
- Space Vertically/Space Horizontally
- Grid
- Snap-to-Grid
- Reshape
- Zoom In/Zoom Out
- Send to Back/Bring to Front
- Choice of line and fill styles
- Reshape (add/delete/move points)
- Flip horizontally/Flip vertically (mirror image)
- Search and Replace tag names (including the use of wildcards)
- Undo (the number of levels shall be user-configurable up to 50)
- Cursor position (optionally on the display for exact object placement)

b. Graphic Animation

Each display must have the ability to dynamically update elements in the picture. Defining the method for dynamic update shall be determined by a point and click OR drag and drop operation.

A pre-defined list of dynamic link elements that shall include the following:

. Data Link	Displays alphanumeric values (numeric value maybe displayed in whole number/decimal or scientific notation)
. Time Link	Displays current time
. Date Link	Displays current date
. System Information Link	Displays diagnostic information
. Alarm Summary Link	Displays current alarm information
. Pushbutton Link	Executes a Command Language script
. Multi-pen Chart Link	Displays up to eight (8) real-time trends
. Multi-bar Chart Link	Displays up to eight (8) real-time bar graphs
. X-Bar Chart Link	Displays an X-Bar graph
. R-Bar Chart Link	Displays a range graph
. S-Bar Chart Link	Displays a standard deviation graph
. XY Chart Link	Displays a parameter vs. parameter graph
. Histogram Chart Link	Displays a histogram graph

Dynamic properties that may be assigned to an object or group of objects must include the following:

. Color changes:	Foreground Color Edge Color Background Color
. Fill Percentage:	Horizontal (Left/Right)

		Vertical (Up/Down)
.	Position:	Horizontal (X) Vertical (Y) Rotate Scale
.	Script Language:	Commands on down (mouse button or key) Commands while down Commands on up
.	Miscellaneous:	Visibility

Objects may be assigned more than one (1) dynamic property. In addition, objects within groups may have individual dynamic properties in addition to those dynamic properties assigned to the overall group.

For properties other than “Commands”, configuration shall be by “point and click” OR “drag and drop” operations; scripting or programming shall not be required.

c. Graphic Refresh Rate

The refresh rate shall be user-definable with the fastest rate being fifty (50) milliseconds, although it is recognized that achieving this performance is dependent upon the overall system configuration.

d. Sources of Data for Object Animation

The animation of the graphics and objects with dynamic properties (including data link, histogram link, multi-pen and multi-bar links and XY plot link) shall be able to be linked to any of these types of data:

. Data acquired by the system and stored in its memory resident database

. Data acquired by another networked system and stored in its memory resident database

. Variables declared in the command language scripts

. Data in other DDE aware applications using Microsoft’s DDE or NetDDE

. Local and networked relational databases using SQL/ODBC or OPC.

e. Reusing Graphic Objects

A method shall be provided for allowing graphics objects or groups of objects to be re-used easily. It shall allow the developer to insert native language prompts that request appropriate tag or other animation information whenever the object or grouped object is reused in another graphic display. These objects, either single or

grouped, shall be intelligent with multiple attribute fields, so that it is possible, for example, to have a single prompt request and substitute:

. A single tag name into multiple dynamic properties within the object

. Multiple attributes (current value, high alarm limit, tag name, etc.) from a single tag into multiple dynamic properties within the object

. Text into the object

. Parameters within command language sequences

No programming, such as C or a C-like language, shall be required to either create or use these intelligent objects or groups of objects.

A library of these objects shall be included with the standard product. At a minimum, this library shall include:

. Meters
. Pipes
. Valves
. Pumps
. Motors
. Tanks
. Pushbuttons
. Arithmetic keypads
. Sliders
. Checkboxes
. Radio buttons
. ISA symbols

4. Multiple Similar Displays

a. Templates

A standard template facility shall be provided for allowing the user to create graphic layouts to be implemented to standardize the look of all displays. A set of templates shall be included with the standard product.

b. Tag Groups

The system shall provide a method of grouping tag names in a file such that specific tag names are provided to a generalized display. In this instance, display links shall not contain hard-coded tag names, but rather, they will contain identifiers that are substituted for real tag names from the tag group file when the display is requested by the operator.

The system shall provide for the importation of tag group files from comma separated variable (CSV) files or standard MS Excel format files.

5. Automated Picture Generation:

Displays shall be able to be generated automatically by importing the re-usable graphic objects into pictures using an ASCII definition file.

6. Documenting Graphic Displays

Printing of graphic displays in color and black and white shall be supported via the standard Microsoft Windows Print Manager in both the graphics development and runtime environments.

Export of the graphic animation links into ASCII format shall be supported.

7. Operator Entry Methods

There shall be provided a flexible, Microsoft Windows standard methodology of operator interaction with the system.

a. Input Devices

The system shall support a variety of input devices, including:

. Mouse or Trackball
. Touch-screen
. Keyboard (standard or function-style)

The support for and use of any of these entry devices shall be as provided within Microsoft Windows or by the manufacturer of the input device. As appropriate, simultaneous support for multiple of these devices shall be provided.

b. Item Selection and Data Entry

Items on a display shall be available to have their values changed by the operator, as appropriate. Selecting an item for data entry shall be done with the use of a pointing device or keyboard. The selected item will be highlighted by a box surrounding it.

The system must support the following data entry methods:

. Numeric Data Entry
. Slider
. Pushbutton
. Multiple Item Selection
. Ramp Value Entry
. Alphanumeric

Each data entry type must be configurable to require confirmation if so desired.

Support shall be provided for Windows input dynamics. This shall allow an operator to select an object with a pointing device (mouse, trackball, or finger

in the case of touchscreen) and to move it across the display, which will cause a change in the value of a tag associated with the object.

c. Operator Action Tracking

The system shall print a descriptive message with a time stamp and user ID to an alarm file whenever any of the following events occur:

. Alarm acknowledgment
. Data entry into a tag
. Reloading a database file
. Saving a database file
. Restarting the system

8. Command/Scripting Language

The system shall provide a command language that allows simple or complex actions or combination of actions to be readily performed. This language shall provide a mechanism for assigning multiple keystrokes and/or commands to a single keystroke, to a display-based pushbutton, or to any object on the display. It shall also be possible to automatically execute a sequence upon opening or closing a graphic display.

a. Supported Commands

The following commands shall be supported:

. Enable/Disable/Toggle an alarm status
. Acknowledge an alarm
. Acknowledge all alarms on a display
. Open/Close a Picture
. Replace the current picture with another
. Append to a file
. Check security clearance rights
. Open/Close/Toggle the status of a digital tag
. Enable/Disable debug mode
. Declare a script variable
. Declare a two-dimensional table (array) script variables
. Open/Close/Copy/Delete/Print/View/Read/Write/Check for/Set Attributes of/List files
. Exit runtime graphics
. Find an animation link in a graphic display
. Get the value of a tag or a field within a tag
. If/Then/Else
. Jump (go to) a line in the command script
. Login/Logout
. Enable/Disable menu items
. Display a message
. Send a message to alarm destinations
. Null (hold a place for future use)

. Pan the display to new coordinates
. Pause (delay) some number of seconds
. Play a .WAV sound file
. Prompt the operator for input
. Ramp a tag to a target value
. Round a value
. Run a named executable program
. Set a tag to a value or the value of another tag
. Set on/Set off/Toggle the scan status of a tag
. Set automatic/Set manual/Toggle the auto/manual status of a tag
. Zoom in on an object
. Convert numbers to strings
. Convert strings to numbers
. Concatenate two strings
. Compare two strings
. Determine the length of a string
. Search a string for a string
. Extract a portion of a string
. Critical Section which is always completed when started

b. Selectable Variable Scope

There shall be three types of “Scope Variables” used in command language scripts.

. Global Scope variables are available to all command language scripts in all pictures in the viewing application program.

. Picture Scope variables are available to all command language scripts within the same picture.

. Script Scope variables are available only to the command language script in which it was created.

c. Automatically declared variables

Global scope variables shall be declared automatically when the viewing application is started, and include the following:

. Current local node name
. Login name of the current user
. Full account name of the current user
. First group of users to which the current user belongs
. Current node time
. Current hour, from 00-23
. Current minute, from 00-59
. Current second, from 00-59
. Current node date
. Current day within the month, from 01-31
. Current month, from 01-12

. Current year, from 00-99
. The nickname of the current picture. If no nickname, the filename is to be given.
. The width resolution of the screen (not the picture) (e.g. HD = 1920)
. The height resolution of the screen (not the picture) (e.g. HD = 1080)

Variables with a scope of the picture shall be declared as each graphic display is opened and include the following:

. The networked tag, variable name or DDE address of the currently selected object.
. The node of the currently selected object
. The tag of the currently selected object
. The field of the currently selected object
. The nickname of the picture. If no nickname, the filename is to be given.
. The width of the current picture
. The height of the current picture

d. Key Macros

Key macros shall be able to be created to assign a keystroke or a simple keystroke sequence to execute a type of command language script.

Within a command language script, key macro files shall be able to be loaded and replaced so that there is the flexibility to change the key macro assignments within a single graphic.

e. Save & Restore Screen Layout Command

The display program shall have the capability to save specific combinations of pictures and their positions on the screen in special layout files. When the layout file is opened, the pictures specified in the file are opened in the assigned positions. This file will quickly re-create a display with an arrangement of multiple pictures.

A script language command shall be provided to open the specified layout. A group of pictures that were saved in a specific layout shall be opened with one command.

9. Multimedia Capability

Support for standard Windows multimedia capabilities, including audio and video, shall be provided.

G. **Alarm Handling**

The system shall be capable of detecting alarm conditions based on the states and values of the various sensed variables. The alarm conditions shall be detected even if the variables causing alarms are not currently on the display.

Alarm limits can be entered by the user at configuration time or from the operator's display during run-time. Alarm limits are expressed in engineering units.

1. Alarm Types

Analog input or alarm variables shall have the following alarm types:

. High High
. High
. Low
. Low Low
. Time rate-of-change
. Bad input from I/O
. Alarm Disable
. Off Scan
. Deadband
. Deviation from target value

Digital input variables shall have the following alarm types:

. Change from Normal (normally on)
. Change from Normal (normally off)
. Return to Normal
. Change of State
. Bad Input
. Alarm Disable
. Off Scan

Statistical data tags shall support "out of control" alarming on the following limits:

. X bar, range and standard deviation control limits
. ± 2 Sigma X bar (standard deviation of sample mean)
. ± 3 Sigma X bar (standard deviation of sample mean)
. Range
. Trend of runs
. Length of runs
. Critical runs
. Standard Deviation (SBAR)

2. Alarm Priorities and Filters

The system shall support at least 3 alarm priorities for each alarm type: High, Medium and Low. A filtering mechanism shall be provided so that the operator can adjust the system alarm priority. The handling shall be as follows:

If priority level is:	Then messages will be sent to alarm destinations for tags with:
Low	High, medium, and low alarm priorities
Medium	High and medium alarm priorities
High	High alarm priorities

Special alarm messages (such as I/O failure) shall be non-maskable and shall always be logged.

3. Alarm Areas

In order to logically divide a process into smaller units, the system shall allow for up to sixteen (16) individual alarm areas to be defined. These alarm areas must be definable on an individual tag level. Each tag must be assignable to up to nine (9) individual alarm areas, all 16 alarm areas, or no alarm areas.

Alarm areas are used to determine which destinations receive each alarm. The method of alarm distribution over a network must be session-based in order to guarantee alarm distribution and reception. Broadcasting of alarms on the network shall not be permitted.

4. Alarm Counters

There shall be a built-in method that keeps track of, at a minimum, the current number of alarms in each of the following categories:

. High priority unacknowledged
. Medium priority unacknowledged
. Low priority unacknowledged
. High priority acknowledged
. Medium priority acknowledged
. Low priority acknowledged
. High priority unacknowledged for each alarm area
. Medium priority unacknowledged for each alarm area
. Low priority unacknowledged for each alarm area
. High priority acknowledged for each alarm area
. Medium priority acknowledged for each alarm area
. Low priority acknowledged for each alarm area
. Total alarms unacknowledged
. Total alarms acknowledged

These values shall be available to be used as display information or to create actions, such as setting outputs.

5. Alarm Destinations

The system shall provide a means for placing an alarm message in one or more of the following locations:

. Alarm summary display
. Alarm printer
. Alarm message file on disk
. Alarm history window (first-in, first-out scrolling window on the display)

The system shall allow any physically connected and/or networked printer to be assigned as the alarm printer. The use of multiple alarm printers shall be supported to allow routing of alarms from different alarm areas to different printers.

Alarm messages shall be independently user configurable as to what information is provided and its sequence within the message. The following shall be available choices:

. Time of the alarm
. Name of the tag causing the alarm
. Alarm condition code
. Engineering units value when the alarm occurred
. Descriptor text assigned to the tag
. Engineering units of the tag

Also, the user shall be able to specify the length of the alarm queue for each destination.

6. Alarm Notification and Acknowledgment

When a new alarm condition is detected, an alarm message will be generated.

If the alarm condition code text for the block is on the current display, then the text will flash until the alarm is acknowledged. Alarm acknowledgment will be performed from the operator's keyboard or from a menu pull-down and shall require no more than one keystroke or mouse click.

The system must be capable of "freezing" the highest alarm status value on the display until acknowledgment is made. Once acknowledgment is made, the system will display the current alarm status text.

The software shall provide built-in capabilities to support the following:

. Audible alert using the computer's speaker when an alarm occurs. Silencing the sound shall be performed through a keyboard command or from a menu pull-down.

. Remote acknowledgment. This shall allow, for example, a button to be depressed by the operator which closes a digital tag and acknowledges one or more alarm conditions, as configured by the user.

. Alarm suspension. This shall allow the user to specify digital tags, that when closed, cause alarms not to be generated for one or more alarm conditions. This is useful, for example, during the start-up phase of a project to avoid nuisance alarms.

. Re-alarm time. This shall allow the system to re-generate an alarm after a user-configurable amount of time, should the alarm condition still exist.

. Delay time. This shall allow the user to specify a period of time for which an alarm condition must remain before an alarm is generated. This is useful, for example, if certain actions may cause a temporary, but acceptable, fluctuation beyond alarm limits and the generation of alarms is not desired.

. Close contact on alarm. This shall allow the user to specify digital tags that become closed when certain alarm conditions occur. These contacts can then be used to take actions, such as sounding a horn or initiating a sequence of instructions. Also, the user can specify the conditions under which these digital tags are re-opened, including the following:

* When the alarm is acknowledged
* When the alarm is cleared
* When the alarm is acknowledged and cleared
* Never (it must be re-opened by a different function)

For analog values, re-alarm time, delay time, and close contact on alarm capabilities shall be supported, not just on a tag-by-tag basis, but for the following individual alarm types within a tag:

. High High
. High
. Low
. Low Low
. Rate of change
. Deviation from target value
. All other

When an alarm is acknowledged from any node on the network, the acknowledgment shall be made directly at the node from which the alarm was generated, and a message indicating that it has been acknowledged shall then be distributed to all alarm destinations.

Messages shall be able to be designated as “events-only”. These will be distributed to alarm destinations but shall not require acknowledgment.

7. Alarm Summary Display

The system must offer an alarm summary display as a pre-defined dynamic link within the graphics package. This alarm summary display must show a list of the pending alarms in the system. As new alarms are detected, entries are made to the display list. As the alarm conditions clear, the entries are removed from the list.

In addition to being able to configure the placement of the information (tag name, current value, descriptor, time of alarm, and alarm status), the user shall be able to specify the color codes to be used to indicate the various alarm conditions.

Alarms can be acknowledged from the alarm summary display either individually (by clicking on an alarm acknowledgment field) or by a full page using a menu pull-down.

The alarm summary display must provide sorting and filtering capabilities. The user shall be able to filter on node name, alarm area(s), alarm status and alarm priority. The user must be able to sort on time, tag, alarm area, alarm priority and alarm status.

H. **Archiving and Reporting**

The system must provide a facility for automatically collecting, storing and recalling data. Recalled data will be made available to a trend display program, a report generation program and to user-written programs.

1. Data File Handling

Data will be stored in Windows-compatible files in compressed format. Compression will be performed through a user-supplied deadband. Entries containing time, name, value and status will be made in the file whenever the real-time value exceeds the previously stored value by the deadband limit. A deadband value of zero will cause an entry in the file each time the real-time value is examined.

Files shall be organized according to time and will contain values for multiple, named variables. The files can be placed on the hard disk or portable media and can be placed on a networked file server for access depending on the software manufacturer allowed file structure.

A mechanism for on-line maintenance and automatic purging of files must also be provided.

2. Archive Configuration

The data to be collected by the archiving program will be identified through an interactive, menu-based configurator. The user will enter the tag name, collection rate, and data compression deadband value.

The collection task can be run at anyone (1) or more computers on the network. The task shall have the ability to access data from the memory-resident tag list in its own computer and/or any computer(s) on the network.

3. Displaying Archived Data

The operator shall be able to recall archived data from the disk to be displayed in graphic format.

The display of archived data shall be user configurable. It shall be possible to configure objects in graphic displays that, when selected, fetch pre-defined historical trend data from disk and display it to the operator.

The historical trend display shall be made up of the following components:

. Pen Group. The pen group configuration is used to define the particular tagnames which will be displayed. Along with tagnames, pen color, marker style and engineering units range may be defined.

. Time Group. The time group configuration is used to define the time period over which the archived data is to be displayed.

. Legend Group. The legend group configuration is used to define the legend parameters for a historical display. Both a primary and alternate legend may be displayed.

These three components make up a display of archived data. All of these configurations may be saved together as a chart group to facilitate the call up of an archived display. A multi-line header, displayed above the trend data, shall be supported.

The display shall support up to eight (8) variables to be displayed on the same time/value axis simultaneously. For each entry in the display list, the operator will be able to assign a given tag name and marker to a particular line color selected from a palette of 256 colors. The operator may also enter display engineering units ranges to cause scaling of the display. Support shall be provided for multiple, different y-axis engineering units to be displayed, as appropriate.

The display shall have two fields of view: The top portion of the screen shall be the graphic field and will display the values of the variables (y-axis) against time (x-axis). The oldest time shall be displayed to the left; the newest to the right. It shall also contain labels for the axes and graphs. The bottom portion of the screen shall be user-configurable to display information, such as node names, tag names, and descriptors, pertaining to the tags in the trend display.

A movable, vertical line will act as a time cursor on the display. This cursor can be moved by dragging it with the mouse. The date, time, and values of the trends corresponding to that time will be displayed in the bottom portion of the screen.

The trend may be shifted forward or backward in time (“panning”) by clicking on left/right buttons. New data will be fetched from the historical file as appropriate. Two sets of buttons shall be provided that cause shifting by different amounts of time. The amount of time shifting caused by these buttons shall be user configurable.

The user shall be able to “zoom” in on any section of the trend display by “cutting” that section with a mouse. The software will automatically re-scale both the y-axis and time axis and will fetch the appropriate data for the time period selected.

The Historical Display package shall have a multi-document architecture as many as nine (9) historical trend display windows may be active at one time. Support shall be provided to “anchor” one trend window to another so that they will always display data from the same period of time. As one window is shifted in time, its anchored windows will shift similarly.

Historical trend windows must be able to update with newly collected data at one (1), two (2), or five (5) minute intervals, as selected by the user.

Local display of data collected by any node on the network shall be supported.

4. Display Output

The trend graphic display must be printable to a black and white or color printer using standard Microsoft Windows printing tools.

I. **Security Management**

The software shall provide a user-based security system. If enabled, the security system must allow for the creation of users with certain rights and/or privileges. These rights must include the ability to run any combination or all of the applications in the data acquisition system. The ability to allow or disallow user access to change values, such as setpoints and machine-setups, on an individual tag basis shall be supported.

Groups of users, such as Operators or Supervisors, can be created and granted rights. All users assigned to a group obtain the rights of the group, although they are still tracked by the system by their individual ID. Individual members of a group may also be assigned additional rights.

The security system will support either centralized or distributed security file management.
When user-based security is enabled, an audit trail will be generated in the system which will tag every operator action with a user identification (ID).

1. Security Areas

The system must support up to 254 separate security areas. Security areas shall be assignable on a per tag basis. Each tag can be assigned all of the available security areas, none of the available security areas, or up to three (3) individual security areas. Only users with clearance for those security areas shall have the ability to change parameters.

Security area names may be up to twenty (20) characters in length.

2. Security Manager

The following functions must be supported within the security manager application:

. Enable/Disable user-based security
. Define users, passwords and login names.
. Define groups to which users may belong
. Define security path(s)
. Define user and/or group rights/privileges
. Define security area names
. Define system auto-start user

3. Securing the Windows GUI Environment

The ability to “lock” an operator or other user into the runtime graphics environment shall be provided. Specifically, disabling any combination of the following shall be supported, as configured by the user:

a. Rebooting (<Ctrl><Alt><Del>) of the computer
b. Task switching under Windows
c. Menu bar
d. Title bar and Menu bar
e. Any manner of access to the Operating System desktop

Items 1 and 2 above shall be tied into the user-based security system so that an authorized user can log in and have the ability to reboot the computer and/or access other tasks.

J. **Recipe Management**

A recipe management facility shall be provided that can be used for such functions as downloading setpoints or machine setup parameters to the process hardware.

1. Recipe Configuration

The recipe shall be configured via a spreadsheet-like application. Alternatively, recipe items may be imported from other applications, such as Microsoft Excel.

The user shall be able to develop recipes specific to a batch, line, or process or generic recipes that can be applicable to multiple batches, lines, or processes.

2. Recipe Management Functionality

Both master (generic templates) and control (specific to a particular trial or batch) recipes shall be supported. There shall be the ability to use formulas, variables, and keywords within recipes in order to develop complex expressions.

Support for batch sizing shall be provided. This shall permit the master recipe to be developed for one quantity to be produced and to have the recipe automatically scale the recipe item each time that the recipe is run.

3. Recipe Security and Tracking

The recipe management system shall be integrated into the user-based security system with rights being assignable for such functions as upload, download, and accessing the recipe development facility.

Operators may be provided authority to override limits on some or all recipe items in order to compensate for such items as environmental conditions, potency of ingredients, and material thickness measurements.

Complete journal support of all actions shall be provided for validation and audit trail purposes.

K. **Software Tools**

The system must be built on and use industry standard development tools.

1. Language

The system must be written predominantly in the C and C++ languages (Microsoft compilers).

2. Data Access

The system shall provide an open architecture that allows interaction with other programs. It must provide a mechanism for other programs to access individual data elements and fields (such as the high alarm limit of an analog input) within data elements in real time. File transfer mechanisms are not acceptable; the access must be direct to the memory-resident database.

The following shall be supported:

. DDE. The system must support Microsoft standard Dynamic Data Exchange (DDE) Server and Client functionality to share data with other DDE-aware applications.

. C/C++. The system shall provide development tools that allow programs written in C or C++ to access (read/write) real-time tag data in the real-time databases on the network.

. Visual BASIC. The system shall provide development tools that allow programs written in Visual BASIC to access (read/write) tag data in the real-time databases on the network.

L. Customer Support by Software Manufacturer

The software vendor must provide the capability of delivering technical support. Twenty-four-hour, seven day a week technical support shall be available from the software manufacturer.

M. The HMI software shall be as manufactured by Rockwell, FactoryTalk View Software Suite (v8.x) or approved equal including:
- FactoryTalk View SE Server (with FactoryTalk Gateway / RSLinx bundle)
- FactoryTalk View SE Client
- FactoryTalk View Studio
- FactoryTalk Historian SE (v4.x)
  - Note: FactoryTalk View v9 will be considered at the time of software procurement

2.05 OPERATION SYSTEM AND APPLICATION SOFTWARE:

A. The operating system and application software shall be provided for each computer as detailed below. For each workstation and server, the Contractor shall fully configure and customize the Dell Open Manage software per machine (specific configuration requirements shall be finalized during the Network Coordination Meeting specified in section 40 95 10). Refer to Specification Section 40 95 10 for wall display interface requirements.

COMPUTER	SOFTWARE	QUANTITY
SCADA Engineering Workstation	Win 2016 64-bit Standard Edition R2 Server	1
	FactoryTalk View Studio	1
	Factory Talk View SE Client	1
	Studio 5000 Logix Designer Pro rev29.x (Note: ensure lock-step with PLC firmware.)	1
	FactoryTalk Gateway / RSLinx Enterprise (latest rev.)	1
	MS Office 365 Pro with MS Access	1
	Norton Anti-Virus Server Edition (latest rev)	1
	MS Visual Basic (latest revision)	1
	Sytech XL Reporter Enterprise Edition	1
	Cisco Network Assistant	1
Primary SCADA I/O & HMI Server	Win 2016 64-bit Standard Edition R2 Server	1
	FactoryTalk View SE Server	1
	FactoryTalk Gateway / RSLinx Enterprise (latest rev.)	1
	Norton Anti-Virus Server Edition (latest rev)	1
	Specter Win 911 Redundant Configuration (latest rev.)	1
Historian Server	Win 2016 64-bit Standard Edition R2 Server	1
	FactoryTalk Historian SE	1
	FactoryTalk Gateway / RSLinx Enterprise (latest rev.)	1
	Norton Anti-Virus Server Edition (latest rev)	1
Control Room SCADA Client Workstation	Win 7 Pro 64-bit (with SP No.1)	1
	FactoryTalk View SE Client	1
	MS Office Pro 2013 with MS Access	1
	Norton Anti-Virus (latest rev.)	1
Windows Primary Domain		

Controller	Win 2016 64-bit Standard Edition R2 Server with IIS and Windows Domain Services	2
	Norton Anti-Virus Server Edition (latest rev.)	2
Laptop (1 Unit)	Win 7 Pro 64-bit (with SP No.1) with Internet Explorer 11.x (or later)	1
	Studio 5000 Logix Designer Pro rev29.x (Note: ensure lock-step with PLC firmware.)	1
	FactoryTalk Gateway / RSLinx Enterprise (latest rev.)	1
	MS Office Pro 2013 with MS Access	1
	Norton Anti-Virus (latest version)	1

B. The Contractor shall register the Cisco software licenses with the Cisco product support program for the entire construction period plus two years after final acceptance. This support shall include 24/7 technical support (email and phone), software upgrades and patches at no additional cost. Software support renewal, as applicable, shall be the sole responsibility of the Contractor. Any required update of the server operating system or virus protection system to accommodate update of the Cisco software, as recommended by Cisco, shall be the responsibility of the Contractor. Recommended upgrades shall be forwarded by the Contractor to the Engineer for approval prior to upgrade.

C. The Contractor shall register all Rockwell FactoryTalk and Logix Designer software licenses with the Rockwell Automation Software Support Program for the entire construction period plus two years after final acceptance. This support shall include 24/7 technical support (email and phone), software upgrades and patches at no additional cost. Software support renewal, as applicable, shall be the sole responsibility of the Contractor. **Note:** furnished license for the FactoryTalk Gateway / RSLinx Enterprise OPC gateway shall be sized to accommodate all project I/O tags plus 50% growth.

D. The Contractor shall register all Specter Win 911 software licenses with the Specter extended support program for the entire construction period plus two years after final acceptance. This support shall include 24/7 technical support (email and phone), software upgrades and patches at no additional cost. Software support renewal, as applicable, shall be the sole responsibility of the Contractor. In addition to the required redundancy configuration, the supplied Win 911 version shall also support, OPC connectivity, all available security options as well as the premium voice option. In addition to post installation and basic configuration services (i.e. registering the Engineer specified alarms within Win 911 and configuring the system to communicate with City of San Diego's cellular phones via the active server modem ports), the Contractor shall reserve an additional 40 hours to customize the Win 911 installation to suit City of San Diego's written requirements and customize the redundant installation to properly manage the auto-dialer function between the two SCADA I/O server installations.

E. The laptop shall be configured by the Contractor to remotely access the control system network via the firewall VPN. Remote access to the HMI system shall be via the ViewPoint server which shall include a customized, web-based, default welcome screen as detailed in article 3.3. The default screen will support navigation to other PanelView Viewpoint licenses on site.

F. In an attempt to address possible version compatibility problems, the version of each software package to be provided shall be reviewed during the Pre-submittal Conference and confirmed during the Contractor software submittal review process.

G. Each SCADA I/O Server shall include a local historical collection service configured to collect historical data for 6 months. The Historian shall be configured to collect data from the SCADA I/O Server (in parallel with the local historical collection service) using standard OPC calls and is intended to be the master repository of all demo plant control system historical data. The integrity of the configuration of the SCADA I/O server system shall be maintained with the implementation of the Master Historian. The SCADA I/O server shall have an OPC data collection module installed (and identically configured), a uniquely identified OPC server configured (as necessary) and data collection buffering services activated. In the event communications are lost with the Historian, the active SCADA I/O Server data collector shall be configured to buffer data until the server connection recovers (default buffer size shall be set to 1GB). Once communications are re-established, the Historian shall automatically receive the buffered data and chronologically backfill the historical database.

Historian data collection specifics shall be established, and customized reports and trends shall be developed by the Contractor all in accordance with the contract Graphics/Report meetings. Refer to Specification Section 40 93 00 for additional functional requirements.

2.06 WORKSTATION GRAPHICS GENERATION

A. It is the responsibility of the Contractor to configure the workstations and to develop, design, engineer, configure and test all of the HMI graphic displays required for this project. All of this work shall take into account the specific needs of the end user. In order to facilitate this work the Contractor shall conduct the following meetings with City of San Diego groups:

B. Graphics Meeting No. 1

1. The Contractor shall chair and develop an agenda for a meeting which shall address the basic criteria to be adhered to in the configuration and development of the HMI graphic displays. At this meeting, which shall be attended by plant managerial personnel, the Contractor shall distribute sample display formats for illustration purposes. As a minimum, this meeting shall address the following issues:

   a. All facility conventions for identifying tag names and descriptors (this will include process areas, piping, mechanical equipment, tanks, valves, inline equipment, instruments, workstations/servers, control components and network components)

   b. Designation of groups within each plant or station area along with tag names and descriptors.

   c. The assignment of individual control loops and inputs to specific groups.

d. Organization of the systems universal display hierarchy.

e. Paging schemes to be used to enable the movement from one display to another.

f. An itemization of the type of display to be used at each level in the graphic hierarchy (e.g., pre-formatted displays, templates, custom graphics, etc.)

g. Color convention to be employed on all graphics for the annotation of various status information, differentiation between alarms on the basis of alarm priority, background colors, static field colorization and dynamic field colorization.

h. The utilization of blinking and conditional text.

i. Definition of graphic symbolism to be used on the project. This listing shall include but not be limited to symbols to be used for process instrumentation, process equipment, piping, vessels and valves. All symbolism must be specific as opposed to generic in that shapes must define both function and type (e.g., specific symbols for each valve design, each pump design, each type of flow meter, etc.). If the Contractor's library of shapes does not adequately describe plant or pipeline conditions, the Contractor shall develop additional shapes to meet the plants or pipelines requirements.

j. Definition of all display select commands that enable the operator to move within the display hierarchy.

k. The utilization of cursor movement commands which enable the operator to move within a display.

l. Definition of control input commands which enable the operator to interact with faceplates control stations and custom graphic displays to implement control outputs/functions.

m. Definition of data input commands which enable the operator to enter numeric values into the PLC system.

n. Definition of the utilization of "poke" points or fields which are dynamically sensitive to operator inputs to facilitate operator entry directly into graphic displays.

o. A review of graphic generation procedures.

p. Historian data collection parameters.

q. Electronic O&M production and accessibility at HMI.

r. User groups and process monitoring/control accessibility

s. Overall system navigation and access philosophy and organization of screen monitoring and control data to support.

t. Vendor package control mode coordination – to manage control authority transition from a Vendor package OIT to the Plant HMI and vice versa.

u. Alarm handling, event logging and approach to managing historical alarm and event log access

v. Web-enabled devices web page integration.

w. Control screen wall display compatibility

2. Subsequent to the adjournment of graphics meeting No. 1 the Contractor shall prepare and formalize a document titled “GRAPHICS CRITERIA” which shall contain detailed meeting minutes and a definition of all graphic guidelines to be adhered to. This report shall be supplemented by a first draft HMI control screen package which illustrates the incorporation and application of each graphic criteria. The report shall be submitted to the Engineer for review / approval within 30 calendar days of the meeting’s adjournment. Engineer comments will be returned to the Contractor for action and response review during Graphics Workshop No.2.

C. Graphics Meeting No. 2

1. Subsequent to the finalization of the overall system-wide graphics criteria, the Contractor shall develop a second draft HMI control screen package as required to support all workstations being furnished under this project, taking into account the Engineer’s first draft review comments. At this meeting the Contractor shall submit 5 color hard copies of the complete package and present a navigable version of the HMI control screen package using the project HMI software. During the workshop, the Contractor will:

a. Review the recorded requirements of Graphics Coordination Workshop No.1 and show how each has been addressed

b. Review the Engineer first draft submittal review comments and show or explain how each has been (or will be) addressed.

c. Review the entire HMI control screen package for overall content completeness

d. Demonstrate approach to input command handling, setpoint management and secure access control.

e. Demonstrate navigability, functionality and overall quality of delivery.

f. Collect and record all actionable comments received.

D. Subsequent to the adjournment of Graphics Coordination meeting No. 2 the Contractor shall prepare a formalized re-submittal of the HMI control screen package for Engineer

review/approval along with the detailed meeting minutes. Meeting minutes shall be submitted within 5 working days of meeting adjournment and will include an expected time frame for Contractor delivery of the HMI control screen package re-submittal.

1. The Contractor shall allow 1 day for each meeting.

E. The following HMI graphic displays shall be developed for this project (as minimum):

1. All plant or station processes.
2. All group alarm displays.
3. All control loop tuning displays.
4. All analog faceplate displays.
5. All key macro icon displays.
6. All database archiving control displays.
7. All customer displays for operator set point entry and recipe displays.
8. All historical trending displays.
9. Control system network configuration and diagnostic displays.
10. Redundant communication diagnostic and control displays.
11. Redundant master node diagnostic and control displays.
12. All local node diagnostics (include PLC's, Operator Interfacing Units and Instruments).
13. All group event displays

All vendor developed control screens and web-based interfaces shall also be incorporated in the final graphics display set.

2.07 PLC SYSTEM DATABASE

A. The workstation software shall incorporate a disk memory resident database which shall store all software elements necessary to implement all data acquisition, calculation, logging and reporting functions. The system data base shall be comprised of the following elements:

1. Current data base; includes process status information.
2. Historical data base; includes non-current process status information.

B. **PLC System Documentor**: Subsequent to system configuration or configuration updates, all information which defines the hardware, control and display configuration of the PLCS system shall be stored in mass memory within the workstations. The workstations shall be provided with all of the intelligence and printing/plotting capabilities to enable the automatic generation of system documentation. All documentation shall be printed/plotted in both a text and graphic format. All documentation shall be accessible in report formats. It is not acceptable to utilize screen prints as a documentation report method. The workstation shall provide the means to produce the following documentation.

1. Current control system databases, (including tags, descriptors, alarm limits, engineering units, associated alarm priority, logical states, etc.) control loops and ladder logic.

2. Definition of the current hardware configuration including locations and associated PLC numbers.

3. Definition of the current display hierarchy and all displays currently in the system.

C. **Data Base Generation**: All software shall be provided to enable historical database generation to be accomplished by a conventional fill-in-the-blanks technique on HMI display formats in which operational characteristics (i.e., name, scan class, alarm limits, etc.) are inserted into linkable prewritten software modules which perform scanning, computational and collection functions. Once the information is transcribed into data records, the database software shall:

1. Read and interpret the information.

2. Manage all process input and output hardware assignments.

3. Generate data files.

4. Perform self-documenting functions such as producing hard copies of listings, main and disk memories, and data sorts by analog input, analog output, contact input and contact output.

D. **Data Acquisition**: Scan blocks shall extract data from the communications network at specifiable rates, condition the signals, convert the data to engineering units in a floating point format, and store the data to produce an IO database. Typical input signals to be scanned include:

1. Limit, status, or position information from open/close valves, motors and process monitoring devices such as flow, temperature, and pressure switches.

2. Measured variables such as flows, pressures, levels, temperatures, etc.

3. Measurements, set points, and outputs from all PLC's.

4. Computed values such as inferential measurements.

5. Operational commands from workstations keyboards.

E. **Data Collection**: The Contractor shall provide programming that collects current values of specified variables from online data storage areas, statistically manipulates data, and creates and maintains an historical database of collected values. Statistical manipulation shall include linear averaging, filtered averaging, and noting of "bad" values. Statistically manipulated data shall then be stored in a historical database.

1. The frequency of historical collection shall be Engineer selectable (e.g. once per second, once per month, etc.). The type and quantity of historical data shall be selectable by addition and deletion to/from the historical data base.

2. The Contractor shall provide adequate and scalable online storage as detailed in section 40 95 10.

3. Historical records (daily) shall be incrementally archived to a network accessible storage and shall be an automatic function.

2.08 REPORTS

A. **General**: The PLCS shall support 2 distinct types of report generation: (a) process reporting which generates logs based on processes or equipment scanned or on manually substituted data and (b) management reports which are comprised of lab derived data and process data. The Contractor shall provide software resources which process all requests for data collecting, reporting, and translating of data to an industry standard format, for assembling of data to predefined formats and merging data with appropriate heading information, for storage of data in output files associated with an output device and initiation of the appropriate output handling routine. The workstations shall provide for manually-initiated reports via an operator interface at each workstation. Reporting functions shall be designed to effectively and clearly report the historical data. The ordering and amount of historical data, as well as any default specific data to be used, shall be selected by the City of San Diego facility manager. The detailed formatting of the data on a given line shall be pre-specified by the City of San Diego facility manager. The City of San Diego facility manager will select the process inputs that are to appear on any log page and their relative placement across the page, title of the page and column heading for each point. The package shall automatically print the accumulated value and, when necessary, automatically scale the value. The reporting package shall automatically flag any value that was not valid during any part of the reporting interval. Valid output devices shall be printers and interactive workstations. Reporting data (in industry standard format) shall be made available to other software packages for producing reports containing bar charts, pie charts etc.

B. **Process Reporting**: The reporting package shall use the process database to provide historical records for an average of 1,000 selected variables. The software as a minimum shall:

1. Collect process data and make available historical information for a minimum of 40 pages of logs, each page containing up to 10 log points described by individual column headers.

2. Automatically print any combination of up to 10 separate periodic reports consisting of selected pages of the 40 pages noted above. The data to be printed shall be pre-selected by the City of San Diego operations representative.

3. Period reports shall include an End-of-Day Report, printed at end of the third shift each day, an End-of-Week Report, printed at the end of the third shift on the last day of the week, and an End-of-Month Report, printed at end of third shift on the last day of the month. Although the Daily, Weekly and Monthly Reports shall be printed at the same time, they are different reports and may be structured to satisfy different needs. Each of these five reports shall have its own selection of pages and historical data, chosen independently of the remaining reports.

C. **Overall Management System Reporting**: The reporting package shall provide historical records for a minimum of 1,000 selected variables to generate the following data to meet system reporting requirements.

1. Collect process data and make available historical information for a minimum of 40 pages of logs, each page containing up to 10 log points described by individual column headers.

2. Automatically print any combination of up to 10 separate periodic reports consisting of selected pages of the 40 pages noted above. The data to be printed shall be preselected by the City of San Diego facility manager when the log is defined. The periodic reports shall include: an End-of-Day Report, printed at end of the third shift each day, an End-of-Week Report, printed at the end of the third shift on the last day of the week, and an End-of-Month Report, printed at end of the third shift on the last day of the month. Although the Daily, Weekly and Monthly Reports shall be printed at the same time, they are different reports and may be structured to satisfy different needs. Each of these five reports shall have its own selection of pages and historical data, chosen independently of the remaining reports.

D. **Configuration of Reports**: It is the sole responsibility of the Contractor to configure the workstations and to develop, design, engineer, configure and test all of the reports required for this project. All of this work shall take into account the specific needs of the end user. In order to facilitate this work the Contractor shall conduct the following meetings with user groups:

1. The Contractor shall chair and develop an agenda 3 weeks in advance for a meeting which shall address the basic criteria to be adhered to in the configuration and development of the reports. At this meeting, which shall be attended by plant managerial personnel, the Contractor shall distribute sample formats for illustration purposes. As a minimum, this meeting shall address the following issues:

   a. All in-plant and remote site data and conventions for identifying tag names and descriptors.

   b. Designation of groups within each plant or station area along with tag names and descriptors.

   c. The assignment of inputs to specific categories.

d. Organization of the systems universal report categories.

e. An itemization of the type of report available.

f. Definition of terms to be used on the reports.

g. Definition of all report commands that enable the operator to move within the report editor.

h. The utilization of cursor movement commands which enable the operator to move within a report.

i. Definition of data input commands which enable the operator to enter numeric values into the system.

j. A review of report generation procedures and user accessibility

E. **Report Meetings**: In order to facilitate the work as described in above item the Contractor shall conduct the following meeting with City of San Diego groups:

1. Report Meeting No. 1: Subsequent to the adjournment of the report meeting No. 1 the Contractor shall prepare and formalize a document titled "REPORT CRITERIA" which shall contain detailed meeting minutes and a definition of all report guidelines to be adhered to. This report shall be supplemented by first draft reports package. The reports shall be submitted to the Engineer for review/approval within 30 calendar days of the meeting's adjournment. Engineer comments will be returned to the Contractor for action and response review during Reports Meeting No.2.

2. Reports Meeting No. 2 - Subsequent to the finalization of the overall report format criteria, the Contractor shall develop a second draft complete reports package, taking into account the Engineer's first draft review comments. At this meeting the Contractor shall submit 5 color hard copies of the complete package including:

   a. A review of the report package developed for the process area(s) for content and completeness.

   b. A review of the Engineer's first draft submittal review comments and show or explain how each has been addressed.

   c. A review of all data fields for process information.

   d. A review of all required input commands associated with the report access and control manipulation.

2.09 **Software License and Registration**: All software provided shall be installed and used within the terms of the software manufacturer's license agreement. All software purchased by the Contractor shall be registered to the Contractor during the construction phase of this project. During that time, the Contractor shall be responsible for providing

and incorporating minor software package updates issued by the software manufacturer. For example, if version 3.1 of a program is purchased, and versions 3.2 and 3.3 were released prior to project completion, the Contractor shall be responsible for incorporating these later versions into the final project. The Contractor would not be responsible for incorporating major software revisions such as the release of a version 4.0 or 4.1.

A. Prior to substantial completion of this project, the Contractor shall re-register all provided software packages to City of San Diego and provide the Engineer and City of San Diego with written confirmation of having done so.

2.6 FACTORY TEST

A. General: Factory testing shall be provided in accordance with Specification Section 40 95 10.

PART 3 — EXECUTION

3.01 INSTALLATION AND CONFIGURATION

A. The PLC-based control system software installation shall be provided in accordance with Specification Section 40 95 10.

B. The Contractor shall provide (1) day's services of a factory representative to certify installation of the HMI software and workstation operating system.

3.02 PROGRAMMING, TESTING, AND INSTRUCTION

A. General: The PLC-based control system software calibration, testing, and instruction shall be provided in accordance with Specification Section 40 95 10 - PLC-Based Control Systems-Hardware.

3.03 GRAPHICS SCREENS

A. Workstation screens shall be configured to maximize user friendliness for the plant operators. The process of calling up a display screen shall consist of pointing a mouse cursor at preconfigured targets on the current screen and clicking, or of pushing a function key which shall be selected from a labeled list on the current display. Each screen shall include targets or function key labels to related screens and to the main menu screen.

B. The various required screens shall use text of all capital letters with the exception of certain engineering units. All text shall be horizontal. Screens showing equipment shall include the equipment number and name as used in the Contract Drawings. Total equipment run times shall be displayed as hours and tenths of hours adjacent to equipment symbols. Each screen shall show the current time and date which shall appear in the same place on each screen. As a minimum, the Contractor shall provide the major control screens detailed below with supporting pop-up control screens for individual pieces of equipment.

C. In the development of the graphic screens, the Contractor shall make use graphic symbols which closely represent the actual field / control / network equipment depicted and piping and structural images rendered with a graphic representation of the actual construction material and color. The images shall be of suitable resolution so as to present a crisp image with no blurred outlines or borders at the screen resolution best suited to support the furnished workstation displays. Animated GIF files of like quality shall be developed and used to represent operating equipment wherever possible. Compressed graphic file formats (e.g. jpeg) and native vector images shall be used in order to reduce file size; the use of bitmap files shall be minimized. Samples of the type of screen image quality expected to be produced by the Contractor shall be distributed by the Engineer during the Pre-submittal Conference as reference. It shall be understood by the Contractor those simple two-dimensional schematic representations of the process screens shall not be acceptable. However, the graphic screens shall be balanced to highlight and prioritize prominence of the process readings and equipment status over the supporting (grayscale) background graphics while limiting the use of striking colors which may make the screens difficult to view over long periods of time.

D. The Contractor shall coordinate the display screen development with the control room wall display manufacturer to ensure optimum display of control screens as described in the previous paragraph and taking into account a 16:9 aspect ratio. The images and renderings shall be of suitable HD resolution so as to present a crisp image with no blurred outlines or elongated/compressed images. Wall display font size shall be no less than 3/8-inch in size. Contractor shall also allow for the development of control screens specifically for presentation on the wall display.

E. Display Screens: The Contractor shall configure display screens to display all status and analog data contained in the PLCS system database. The Contract Drawings, Control Strategies, I/O Schedule and Specifications shall form the basis of the PLCS system database. Some status and analog points shall be displayed on more than one display screen, especially where it relates to more than one process or is significant to facility operations. Every analog and status value shall appear on at least one display screen. Analog values shall be displayed with appropriate engineering units and shall use techniques such as variable fill and/or color changes to provide clarity. Separate control palettes shall be developed to help segregate control functions from monitoring functions for each process/control area of the plant as well as control/network system maintenance and configuration areas.

F. Properties for control system graphics, equipment and PID faceplates, navigation, status and alarm handling, and link management shall be as determined by Metropolitan HMI development standards and the final outcome of the Graphics Meetings. All “dumb” objects shown for clarity shall be grey in color.

END OF SECTION

THIS PAGE INTENTIONALLY LEFT BLANK

SECTION 43 05 11

GENERAL REQUIREMENTS FOR EQUIPMENT

PART 1 GENERAL

1.01 DESCRIPTION

A. Scope:
   1. This section specifies general requirements which are applicable to all mechanical equipment. All mechanical equipment shall meet the requirements of this section in addition to the specific requirements of each individual equipment specification section(s).

B. All the equipment downstream of MBR System shall meet drinking water treatment plant requirements and all equipment for process systems downstream of MBR system shall be NSF 61 certified.

C. Equipment Lists:
   1. Equipment lists, presented in these specifications and as specified on the drawings, are not complete listings of all equipment, devices and material required to be provided under this contract. The Subcontractor(s) shall prepare their own material and equipment takeoff lists as necessary to meet the requirements of this project manual.

1.02 QUALITY ASSURANCE

A. Arrangement:
   1. The arrangement of equipment shown on the drawings is based upon information available at the time of design and is not intended to show exact dimensions conforming to a specific manufacturer. The drawings are, in part, diagrammatic, and some features of the illustrated equipment installation may require revision to meet actual submitted equipment installation requirements; these may vary significantly from manufacturer to manufacturer. The Subcontractor shall, in determining the cost of installation, include these differences as part of his bid proposal. Structural supports, foundations, connected piping, valves, and electrical conduit specified may have to be altered to accommodate the equipment actually provided. No additional payment shall be made for such revisions and alterations.

B. References:
   1. This section contains references to the documents listed below. They are a part of this section as specified and modified. Where a referenced document cites other standards, such standards are included as references under this section as if referenced directly. In the event of conflict between the requirements of this section and those of the listed documents, the requirements of this section shall prevail.
   2. Unless otherwise specified, references to documents shall mean the documents in effect at the time of Advertisement for Bids or Invitation to Bid (or on the

effective date of the Agreement if there were no Bids). If referenced documents have been discontinued by the issuing organization, references to those documents shall mean the replacement documents issued or otherwise identified by that organization or, if there are no replacement documents, the last version of the document before it was discontinued. Where document dates are given in the following listing, references to those documents shall mean the specific document version associated with that date, regardless of whether the document has been superseded by a version with a later date, has been discontinued or has been replaced.

Reference	Title
ABMA Std 9	Load Ratings and Fatigue Life for Ball Bearings
ABMA Std 11	Load Ratings and Fatigue Life for Roller Bearings
ASME B1.1	Unified Inch Screw Threads (UN and UNR Thread Form)
ASME B1.20.1	Pipe Threads, General Purpose (Inch)
ASME B16.1	Gray Iron Pipe Flanges and Flanged Fittings, (Classes 25, 125, and 250)
ASME B18.2.1	Square and Hex Bolts and Screws (Inch Series)
ASME B18.2.2	Square and Hex Nuts (Inch Series)
ANSI S2.19	Mechanical Vibration – Balance Quality Requirements of Rigid Rotors, Part 1: Determination of Permissible Unbalance, Including Marine Applications

C. Unit Responsibility:

1. The Subcontractor shall cause equipment assemblies made up of two or more components to be provided as a working unit by the unit responsibility manufacturer, where specified. The unit responsibility manufacturer shall coordinate selection, coordinate design, and shall provide all mechanical equipment assembly components such that all equipment components furnished under the specification for the equipment assembly, and all equipment components specified elsewhere but referenced in the equipment assembly specification, is compatible and operates reliably and properly to achieve the specified performance requirements. Unless otherwise specified, the unit responsibility manufacturer shall be the manufacturer of the driven component equipment in the equipment assembly. The unit responsibility manufacturer is designated in the individual equipment specifications found elsewhere in this project manual. Agents, representatives or other entities that are not a direct division of the driven equipment manufacturing corporation shall not be accepted as a substitute for the driven equipment manufacturer in meeting this requirement. The requirement for unit responsibility shall in no way relieve the Subcontractor of his responsibility for performance of all systems as provided in the General Conditions of the Contract Documents.

D. The Subcontractor shall ensure that all equipment assemblies provided for the project are products for which unit responsibility has been accepted by the unit responsibility manufacturer(s), where specified. Unit responsibility for related

components in a mechanical equipment assembly does not require or obligate the unit responsibility manufacturer to warranty the workmanship or quality of component products not manufactured by them. Where an individual specification requires the Subcontractor to furnish a certificate from a unit responsibility manufacturer, such certificate shall conform to the content, form and style of Form 43 05 11-C included in Section 01 99 99, shall be signed by an officer of the unit responsibility manufacturer's corporation and shall be notarized.

E. Balance:

1. Unless specified otherwise, for all machines 10 HP and greater, all rotating elements in motors, pumps, blowers and centrifugal compressors shall be fully assembled, including coupling hubs, before being statically and dynamically balanced. All rotating elements shall be balanced to the following criteria:

$$U_{per} = 6.015 \frac{GW}{N}$$

a. Where:

1) U_{per} = permissible imbalance, ounce-inches, maximum
2) G = Balance quality grade, millimeters per second
3) W = Weight of the balanced assembly, pounds mass
4) N = Maximum operational speed, rpm

2. Where specified, balancing reports, demonstrating compliance with this requirement, shall be submitted as product data. Equipment balance quality grade shall be *G* 2.5 (*G* = 2.5 mm/sec) or better in accordance with ANSI S2.19.

PART 2 PRODUCTS

2.01 FLANGES AND PIPE THREADS

A. Flanges on equipment and appurtenances provided under this section shall conform in dimensions and drilling to ASME B16.1, Class 125. Pipe threads shall conform in dimension and limits of size to ASME B1.1, coarse thread series, Class 2 fit.

B. Threaded flanges shall have a standard taper pipe thread conforming to ASME B1.20.1. Unless otherwise specified, flanges shall be flat faced.

C. Flange assembly bolts shall be heavy pattern, hexagonal head, carbon steel machine bolts with heavy pattern, hot pressed, hexagonal nuts conforming to ASME B18.2.1 and B18.2.2. Threads shall be Unified Screw Threads, Standard Coarse Thread Series, Class 2A and 2B, ASME B1.1.

2.02 BEARINGS

A. Unless otherwise specified, equipment bearings shall be oil or grease lubricated, ball or roller type, designed to withstand the stresses of the service specified. Each bearing shall be rated in accordance with the latest revisions of ABMA Methods of Evaluating Load Ratings of Ball and Roller Bearings. Unless otherwise specified,

equipment bearings shall have a minimum L-10 rating life of 50,000 hours. The rating life shall be determined using the maximum equipment operating speed.

B. Grease lubricated bearings, except those specified to be factory sealed and lubricated, shall be fitted with easily accessible grease supply, flush, drain and relief fittings. Extension tubes shall be used when necessary. Grease supply fittings shall be standard hydraulic alemite type.

C. Oil lubricated bearings shall be equipped with either a pressure lubricating system or a separate oil reservoir type system. Each oil lubrication system shall be of sufficient size to safely absorb the heat energy normally generated in the bearing under a maximum ambient temperature of 60 degrees C and shall be equipped with a filler pipe and an external level indicator gage.

D. All bearings accessible to touch, and located within 7 feet measured vertically from floor or working level or within 15 inches measured horizontally from stairways, ramps, fixed ladders or other access structures, shall either incorporate bearing housings with sufficient cooling to maintain surface temperature at 65 degrees C or less for continuous operation at bearing rated load and a 50 degrees C ambient temperature or shall be provided with appropriate shielding shall be provided that will prevent inadvertent human contact.

2.03 V-BELT ASSEMBLIES

A. Unless otherwise specified, V-belt assemblies shall be Dodge Dyna-V belts with matching Dyna-V sheaves and Dodge Taper-lock bushings, Wood's Ultra V-belts with matching Ultra-V sheaves and Wood's Sure-Grip bushings, or approved equal.

B. Sheaves and bushings shall be statically balanced. Additionally, sheaves and bushings which operate at a peripheral speed of more than 5500 feet per minute shall be dynamically balanced. Sheaves shall be separately mounted on their bushings by means of three pull-up grub or cap tightening screws. Bushings shall be key seated to the drive shaft.

C. Belts shall be selected for not less than 150 percent of rated driver horsepower and, where two sheaves sizes are specified, shall be capable of operating with either set of sheaves. Belts shall be of the antistatic type where explosion proof equipment is specified.

2.04 PUMP SHAFT SEALS

A. General:

1. Seals for water and wastewater pump shafts shall be either stuffing box or mechanical seals as specified in the detailed specifications. For industrial wastewater service, or for fluids other than water or municipal wastewater, the recommendations of the seal manufacturer shall be followed for selection of appropriate seals. Unless specified otherwise, stuffing boxes and mechanical seals shall conform to the requirements set forth in this paragraph.

B. Mechanical Seals:

1. Unless otherwise specified in the detailed pump specifications, mechanical seals shall be split mechanical seals requiring no field assembly, other than assembly around the shaft and insertion into the pump. They shall be self-aligning, and self-centering, single seals. They shall be of a nondestructive (nonfretting) type requiring no wearing sleeve for the shaft. Shafts for pumps specified with mechanical seals shall be furnished with no reduction in size through the seal area (no shaft sleeve). Where the detailed specifications call for cartridge instead of split seals, all other requirements of this paragraph apply.
2. Metal parts shall be Type 316 or 316L stainless steel. Springs shall be Hastelloy C, Elgiloy, or other Duplex SS selected for resistance to chloride attack. Rotary faces shall be silicon carbide or chrome oxide. Stationary faces shall be silicon carbide for solids bearing fluid service and carbon for clean water service. Elastomers shall be ethylene propylene or fluorocarbon. Mechanical seals shall be suitable for operation between full vacuum (0 psia) up to 200 percent of the maximum specified operating pressure, but in any event not less than 200 psig.
3. Seal chambers shall be provided with vented solids removal restriction bushings except for enclosed line shaft pumps where the seal barrier fluid is used for line shaft bearing lubrication. The bushing shall both control the amount of flushing water flow and restrict solids and gas accumulation from the seal face area.
4. Candidate seals include:
   a. Chesterton 442 seals provided with Chesterton/SpiralTrac solids removal restriction bushings Version N or D, as recommended by EnviroSeal Engineering Products, Ltd, Nova Scotia, Canada.
   b. AESSEAL RDS seals with Cyclops bushing.
   c. John Crane 3710 seals with Type 24SL bushing.
   d. Or approved equal.
5. Seals on pumps for contaminated water service (sludge, grit, wastewater, scum, reclaimed water, etc.) shall be drilled and tapped for connection of a clean water flushing supply.
6. Seals for all vertical pumps (whether column or volute type) shall be provided with a second flush connection. Vertical pumps shall have a vent valve attached to the mechanical seal to eliminate air from the seal chamber prior to pump start; start-up procedures shall include venting instructions; and for remotely started pumps, the vent system shall be automated. Where specified in the detailed specifications, permissive confirmation automatic vent systems shall be provided.

C. Shaft Packing:

1. Where shaft packing is specified, stuffing boxes shall be tapped to permit introduction of seal liquid and shall hold a minimum of five rows of packing. Stuffing boxes shall be face attached. Stuffing box and shaft shall be suitable for field installation, without machining or other modifications, of the mechanical seal specified in paragraph 2.04 Mechanical Seals for the applicable pump and operating conditions.
2. Unless otherwise specified, lantern rings shall be bronze or Teflon, packing shall be die-molded packing rings of non-asbestos material suitable for the intended

service and as recommended by the manufacturer, and glands shall be bronze, two piece split construction. Lantern rings shall be of two-piece construction and shall be provided with tapped holes to facilitate removal. Lantern rings shall be drilled and tapped 1/4 NC-20. The impeller end of the packing on all but line shaft pumps with external source water lubricated bearings shall be fitted with a SpiralTrac, Version P packing protection system as manufactured by EnviroSeal Engineering Products, Ltd, Nova Scotia, Canada or approved equal.

3. The section of each shaft or impeller hub that extends through or into the stuffing box shall be fitted with a replaceable stainless steel sleeve with a Brinell hardness of not less than 500. The sleeve shall be held to the shaft to prevent rotation and shall be gasketed to prevent leakage between the shaft and the sleeve. Minimum shaft sleeve thickness shall be 3/8 inch.

2.05 COUPLINGS

A. Unless otherwise specified in the particular equipment sections, equipment with a driver greater than 1/2 HP, and where the input shaft of a driven unit is directly connected to the output shaft of the driver, shall have its two shafts connected by a flexible coupling which can accommodate angular misalignment, parallel misalignment and end float, and which cushions shock loads and dampens torsional vibrations. The flexible member shall consist of a tire with synthetic tension members bonded together in rubber. The flexible member shall be attached to flanges by means of clamping rings and cap screws, and the flanges shall be attached to the stub shaft by means of taper lock bushings which shall give the equivalent of a shrunk-on fit. There shall be no metal-to-metal contact between the driver and the driven unit. Each coupling shall be sized and provided as recommended by the coupling manufacturer for the specific application, considering horsepower, speed of rotation, and type of service.

B. Where torque or horsepower capacities of couplings of the foregoing type is exceeded, Thomas-Rex, Falk Steel Flex, or approved equal, couplings will be acceptable provided they are sized in accordance with the equipment manufacturer's recommendations and sizing data are submitted. They shall be installed in conformance to the coupling manufacturer's instructions.

2.06 GUARDS

A. Exposed moving parts shall be provided with guards which meet all applicable OSHA requirements. Guards shall be fabricated of 14-gage steel, 1/2-13-15 expanded metal screen to provide visual inspection of moving parts without removal of the guard. Guards shall be galvanized after fabrication and shall be designed to be readily removable to facilitate maintenance of moving parts. Reinforced holes shall be provided. Lube fittings shall be extended through guards.

2.07 CAUTION SIGNS

A. Equipment with guarded moving parts which operates automatically or by remote control shall be identified by signs reading "Caution - Automatic Equipment May Start at Any Time". Signs shall be constructed of fiberglass material, minimum 1/8 inch

thick, rigid, suitable for post mounting. Letters shall be white on a red background. The sign size and pattern shall be as shown on the drawings. Signs shall be installed near guarded moving parts.

2.08 GAGE TAPS, TEST PLUGS AND GAGES

A. Gage taps shall be provided on the suction and discharge sides of pumps, blowers and compressors. Pressure and vacuum gages shall be provided where specified. Gage taps, test plugs, and gages shall be as specified in Division 40.

2.09 NAMEPLATES

A. Nameplates shall be provided on each item of equipment and shall contain the specified equipment name or abbreviation and equipment number. Equipment nameplates shall be engraved or stamped stainless steel and fastened to the equipment in an accessible and visible location with stainless steel screws or drive pins.

2.10 LUBRICANTS

A. The Subcontractor shall provide for each item of mechanical equipment a supply of the required lubricant adequate to last through the specified commissioning period. Lubricants shall be of the type recommended by the equipment manufacturer and shall be products of the City's current lubricant supplier. The Subcontractor shall limit the various types of lubricants by consolidating them, with the equipment manufacturer's approval, into the least number of different types. Not less than 90 days before the date shown in his construction schedule for starting, testing and adjusting equipment, the Subcontractor shall provide the Contractor with three copies of a list showing the required lubricants, after consolidation, for each item of mechanical equipment. The list shall show estimated quantity of lubricant needed for a full year's operation, assuming the equipment will be operating continuously.

2.11 ANCHOR BOLTS

A. Anchor bolts shall be designed for lateral forces for both pullout and shear in accordance with the provisions of Section 05 05 20. Unless otherwise stated in the individual equipment specifications, anchor bolt materials shall conform to the provisions of Section 05 05 20.

2.12 SPARE PARTS

A. Spare parts, wherever required by detailed specification sections, shall be stored in accordance with the provisions of this paragraph. Spare parts shall be tagged by project equipment number and identified by part number, equipment manufacturer, and subassembly component (if appropriate). Spare parts subject to deterioration, such as ferrous metal items and electrical components, shall be properly protected by lubricants or desiccants and encapsulated in hermetically sealed plastic wrapping. Spare parts with individual weights less than 50 pounds and dimensions less than 2 feet wide, or 18 inches high, or 3 feet in length shall be stored in a wooden box with a hinged wooden cover and locking hasp. Hinges shall be strap type. The box

shall be painted and identified with stenciled lettering stating the name of the equipment, equipment numbers, and the words "spare parts." A neatly typed inventory of spare parts shall be taped to the underside of the cover.

PART 3 EXECUTION

3.01 GENERAL

A. Installation of equipment accessories included in this section shall be as recommended by the equipment manufacturer unless otherwise specified in the individual equipment specification section.

END OF SECTION

SECTION 43 05 13
RIGID EQUIPMENT MOUNTS

PART 1 GENERAL

1.01 DESCRIPTION

A. Scope:
1. This section specifies minimum requirements for rigid equipment mounts. Completed equipment mounts shall consist of equipment pads, equipment anchors, and mounting plates (baseplates, soleplates, or fabricated steel frames) set in grout.
2. Equipment mounts shall conform to the requirements specified and as shown on the Drawings.
3. If a conflict exists between this section and requirements of individual equipment manufacturers, the more restrictive requirements shall prevail.
4. Alignment of equipment installed on rigid equipment mounts is specified in Section 43 05 14.

B. Definitions:
1. Specific equipment mounting terminology used in this section conforms to the following definitions:
   a. Baseplate: A mounting plate configured with a top plate and a perimeter edge of the mounting plate that is below the top plate. Baseplates have a cavity between the top plate and a horizontal plane at the bottom edge of the perimeter of the mounting plate.
   b. Soleplate: A machined or pre-formed mounting plate with a uniform horizontal surface across the entire underside of the mounting plate, excepting shear lugs/keys, grout pour holes, vent holes, and attachment hardware (nuts, bolts, tapped holes, etc.). Soleplates have a top plate but lack the perimeter bottom edge that extends below the underside of the top plate that is a defining feature of baseplates.
   c. Fabricated Steel Frame: An equipment mounting plate constructed of rolled steel shapes and plates welded into a frame. Fabricated steel frames do not have top plates.
   d. Equipment Pad: Concrete foundation (block or slab) supporting and elevating mounting plates above the supporting structural floor slab or local grade.
   e. Mounting Pads: Milled/machined areas of baseplates, soleplates, and fabricated steel frames where the feet or mounting surfaces of mounted equipment and drivers are bolted to the baseplate, soleplate, or fabricated steel frame.
   f. Leveling Blocks: Steel blocks temporarily placed under baseplates, soleplates, or fabricated steel frames at leveling positions (at equipment anchors) for the purpose of leveling baseplates, soleplates, or fabricated steel frames prior to grouting.

g. Shims: Thin stainless steel plates of uniform thickness used for fine adjustment of level. Shims are used on top of leveling blocks for mounting plate leveling or used between equipment drivers and baseplates, soleplates, or fabricated steel frames for equipment alignment.

h. Wedges: Pairs of uniformly tapered metal blocks that are stacked with the tapered surfaces reversed (relative to the other wedge) so that the top and bottom surfaces of the wedges are parallel. Wedges are used between equipment pads and baseplates, soleplates, or fabricated steel frames for the purpose of leveling mounting plates.

i. Mounting Stud: Threaded rod or bolts anchored to baseplates, soleplates, or fabricated steel frames for the purpose of mounting equipment or ancillary devices onto baseplates, soleplates, or fabricated steel frames.

j. Reinforcement Dowels or Reinforcement Hooks: Steel reinforcement rods embedded in concrete, across a cold joint, for the purpose of transferring loads or force across the joint.

k. Leveling Position: A location on the top of a concrete equipment pad where leveling tools and equipment will be temporarily installed or used for the purpose of leveling baseplates, soleplates, and fabricated steel frames prior to grouting.

l. Grout Manufacturer: Refers to the manufacturer of the grout product used for installation of rigid equipment mounts.

m. Grout Manufacturer's Technical Representative(s): Refers to the technical representative(s) of the Grout Manufacturer. The Grout Manufacturer's Technical Representative shall not be an employee of the Subcontractor.

1.02 QUALITY ASSURANCE

A. References:

1. This section contains references to the following documents. Referenced documents are a part of this section as specified and modified. In case of conflict between the requirements of this section and those of the listed documents, the requirements of this section shall prevail.
2. References to documents shall mean the documents in effect at the time of Advertisement for Bids or Invitation to Bid. If referenced documents have been discontinued by the issuing organization, references to those documents shall mean the replacement documents issued or otherwise identified by that organization or, if there are no replacement documents, the last version of the document before it was discontinued. Where document dates are given in the following listing, references to those documents shall mean the specific document version associated with that date, whether or not the document has been superseded by a version with a later date, discontinued or replaced.

Reference	Title
ACI 318, Appendix D	Building Code and Commentary, Anchorage to Concrete
ANSI/HI 1.4	Centrifugal Pumps – Installation, Operation and Maintenance
ANSI/HI 2.4	Vertical Pumps – Installation, Operation and Maintenance

Reference	Title
API RECOMMENDED PRACTICE 686	Recommended Practices for Machinery Installation and Installation Design
ASTM E329	Inspection and Testing Agencies for Concrete, Steel, and Bituminous Materials as Used in Construction
ASTM F593	Stainless Steel Bolts, Hex Cap Screws, and Studs
ASTM F1554	Anchor Bolts, Steel, 36, 55 and 105 ksi Yield Strength
MIL-PRF-907E	Anti-Seize Thread Compound, High Temperature
SSPC	Society for Protective Coatings Specifications, Vol. 2
IBC	International Building Code (including local amendments)

B. Quality Control by Subcontractor:
   1. To demonstrate conformance with the specified requirements for rigid equipment mounts, the Subcontractor shall provide the services of an independent testing laboratory that complies with the requirements of ASTM E329. The testing laboratory shall sample and test materials installed as part of rigid equipment mounts as specified in this Section. Costs of testing laboratory services shall be borne by the sub-contractor.
   2. Where epoxy grout is specified in individual equipment specifications, the Subcontractor shall furnish the services of a grout manufacturer's technical representative who has been factory trained by the grout manufacturer. The grout manufacturer's technical representative shall perform training and quality control of epoxy grout installation for rigid equipment mounts as specified in this section.

C. Special Inspection for Equipment Anchors:
   1. Equipment anchors shall comply with special inspection requirements specified in Section 01 45 33.

1.03 SUBMITTALS

A. The following information shall be provided in accordance with the submittal requirements specified in Section 01 33 00.
   1. A copy of this specification section, including addendum updates, (referenced sections need not be included for this Section) with each paragraph check-marked to indicate specification compliance or marked to indicate requested deviations from specification requirements. Check marks shall denote full compliance with a paragraph as a whole. If deviations from the specifications are indicated, and therefore requested by the Subcontractor, each deviation shall be underlined and denoted by a number in the margin to the right of the identified paragraph, referenced to a detailed written explanation of the reasons for requesting the deviation. The City shall be the final authority for determining acceptability of requested deviations. The remaining portions of the paragraph not underlined will signify compliance on the part of the Sub-contractor with the specifications. Failure to include a copy of the marked-up specification sections, along with justification(s) for any requested deviations shall be sufficient cause for rejection of the entire submittal with no further consideration. Copies of this specification section shall be numbered and marked (specification number and equipment number) for

inclusion (filing) with submittal materials furnished for individual equipment specifications.

2. Name, employer, a copy of the employee's Qualified Millwright card or other equivalent certificate of journeyman qualifications for millwrights who will install rigid equipment mounts, as specified in paragraph 3.03 Leveling.
3. Certificates or other documentation issued by the epoxy grout manufacturer that demonstrates that the grout manufacturer's technical representative has been factory trained on installation of epoxy grout for equipment mounts, as specified in paragraph 1.02 Quality Control by Subcontractor.
4. Shop drawings for equipment pads, equipment anchors, and baseplate, soleplate or fabricated steel frame details. Shop drawings shall depict size and location of equipment pads and reinforcement; equipment drains; equipment anchor, size, location, and projection; expansion joint locations; elevation of top of grout and grout thickness; elevation of top of baseplate, soleplate, or mounting block; size and location of electrical conduits; and any other equipment mounting features embedded in equipment pads. Shop drawings for equipment pads, equipment anchors, and baseplate, soleplate, or fabricated steel frames shall be numbered and marked (specification number and equipment number) for inclusion (filing) with the associated equipment submittal requirements.

B. See Sections 01 78 23 and 01 77 00 for requirements of Operation and Maintenance Data and closeout submittals.

PART 2 PRODUCTS

2.01 GENERAL

A. Equipment mounts for individual equipment shall be per details shown on the Drawings.

B. Equipment and drivers shall be rigidly mounted on a common mounting plate and grouted into place on a concrete equipment pad unless alternate requirements are specified in the Drawings. Unless otherwise specified in the individual equipment specification, mounting plates shall be anchored to equipment pads with a layer of grout between the equipment pad and the mounting plate.

2.02 EQUIPMENT PADS

A. Materials:
   1. Equipment pads shall be reinforced concrete as shown on Drawings.
   2. Minimum dimensions for equipment pads are shown on structural drawings where the equipment pad is required to provide a minimum mass for vibration dampening.

B. Equipment Pad Drainage – Not Used:

2.03 EQUIPMENT ANCHORS:

A. Equipment Anchor Materials:

1. Equipment anchors shall be all thread rod with heavy hex welded nuts, heavy hex bolts, Post-installed anchors (wedge, sleeve, undercut, expansion, and adhesive anchors), or adjustable canister anchors. As shown on Drawings.
2. Post-installed anchors (wedge, sleeve, undercut, expansion, and adhesive anchors) shall conform to the recommendations from the manufacturer.
3. Adjustable canister anchors shall be cast-in-place pre-manufactured adjustable anchor inserts. Adjustable canister anchors shall provide a minimum of 6 inches of vertical bolt height adjustment and lateral adjustment of the anchor bolt while maintaining the anchor bolt in a true vertical orientation. Adjustable canister anchors shall be Jakebolts as manufactured by Unisorb, Heavy Duty Adjustable Anchors as manufactured by Deco, Rowan Adjustable Canister Anchor Bolt, or approved equal.
4. Equipment anchor materials shall conform to the following table for the area exposure condition where the equipment is installed.

Area Exposure	Equipment Anchor Materials
Indoor, Dry	Carbon Steel, ASTM F1554, Grade 36, weldable per S1 for threaded rod
Indoor, Wet	Galvanized Carbon Steel, ASTM F1554, Grade 36, weldable per S1 for threaded rod
Outdoor	304 Stainless, ASTM F593, Cond. CW
Submerged, Immersed	316 Stainless, ASTM F593, Cond. CW
Process Corrosive	316 Stainless, ASTM F593, Cond. CW
Chemical Corrosive	316 Stainless, ASTM F593, Cond. CW

B. Equipment Anchor Design:
1. The size (diameter) of anchors for clamping/fastening mounting plates to equipment pads shall be as specified by the equipment manufacturer.
2. Equipment anchor size, embedment, and edge distance shall comply with the California Building Code and shall be sufficient to resist the maximum lateral and vertical forces specified in Specification Listing Seismic/Structural Requirements For The Project, Section 01 88 15.
3. The sub-contractor shall furnish equipment anchor calculation submittals for all equipment. Equipment anchor calculations shall be furnished as product data and submitted with equipment submittals. Equipment anchor calculations shall be sealed by a registered structural or civil engineer licensed in the State of California.

C. Equipment Anchor Tension:
1. Unless alternate bolt torque/tension requirements are specified by the equipment manufacturer, equipment anchors shall be tightened to provide a final clamping force that produces a tensile stress of 15,000 psi in each equipment anchor. Adjustable canister anchors shall be tightened to the manufacturer's maximum safe working load. Equipment anchors consisting of Post-installed anchors shall be tightened to manufacturer's recommendations.

2. Bolt torque values required to produce the specified bolt tension based on well lubricated plain finish national coarse thread bolts are presented in the following table. Revise bolt torque values per equipment manufacturer's recommendations for alternate thread patterns, thread lubrication, bolt material, or bolt finish.

Bolt Diam. (in)	3/8	1/2	5/8	3/4	7/8	1	1-1/8	1-1/4	1-1/2
Final bolt torque for 15,000 psi bolt stress (ft*lbs)	8	15	30	50	80	125	180	250	400

3. Prior to leveling and grouting mounting plates, grouted equipment anchors shall be pull tested to the values specified in the following table.

Anchor Diam. (in)	3/8	1/2	5/8	3/4	7/8	1	1-1/8	1-1/4	1-1/2
Pull test load (kips)	2.1	3.8	6.1	9.1	13	17	22	28	43

D. Anchor Sleeves:
1. Equipment anchors shall be fitted with sleeves as shown on the Drawings. Sleeve length for equipment anchors shall be 15 times the bolt diameter unless otherwise shown on the Drawings. Sleeves may be installed at the sub-contractor's option if not shown on the Drawings.
2. Adjust equipment anchor length/embedment depth shown on Drawings if sleeves are not required.
3. Anchor sleeves shall be flexible polyurethane foam, steel cylinder/tubes, or ribbed plastic sleeves.
4. Fill steel cylinders/tubes and ribbed plastic sleeves with a flexible room temperature vulcanizing (RTV) sealant prior to embedment/installation.

2.04 MOUNTING PLATES

A. General:
1. All baseplates, soleplates, and fabricated steel frames shall have edges of surfaces bearing on grout rounded to a radius of not less than 0.25 inch.
2. Perimeter corners of baseplates, soleplates, or fabricated steel frames shall be rounded to a radius of not less than 2.0 inches to avoid producing stress risers on the grouted foundation.
3. Grout pouring holes (minimum 4 inches in diameter for epoxy grout, minimum 2.5 inches in diameter for cementitious non-shrink grout) shall be provided in all baseplates and soleplates and all baseplates and soleplates shall have air release holes.
4. Grout relief or vent holes (minimum 1 inch in diameter) shall be provided in all baseplates and soleplates.
5. Mounting holes for equipment anchors shall be drilled through baseplates, soleplates, and fabricated steel frames.

6. Mounting holes for equipment anchors shall be drilled. Mounting holes shall not be burned out and they shall not be open slots.
7. Terminations requiring connections to baseplates and soleplates shall be acorn nuts welded to the underside of the baseplate or soleplate or nuts welded to the underside of the baseplate or soleplate and plugged with cork, plastic plugs or grease.
8. Where fasteners terminate only into the baseplate, soleplate, or fabricated steel frame, threaded lengths (tapped or embedded in mounting plates) shall be not less than the bolt diameter.
9. Where baseplates, soleplates, or fabricated steel frames are leveled using jackscrews, jackscrew threads shall be tapped in thickened pads or otherwise in sufficient metal to provide ease in adjusting level.
10. Mounting pads and/or mounting surfaces for baseplates, soleplates, and fabricated steel frames shall be milled flat after all welding and stress relieving and shall be coplanar within 0.0005 inch per foot in all directions. Baseplates shall be pre-grouted prior to milling.
11. Baseplates, soleplates, and fabricated steel frames shall provide common support for the equipment and driver (and flywheel, if one is specified).
12. Baseplates, soleplates, and fabricated steel frames for equipment with drivers 20 horsepower and greater shall be furnished with transverse alignment (horizontal) positioning jackscrews for alignment of equipment drivers on horizontal surfaces of baseplates.
13. Alignment/positioning jackscrews shall be in perpendicular directions in a horizontal plane at the mounting position for each corner or foot of the equipment driver. (Additional jackscrews shall be provided for transverse alignment of the flywheel, if flywheels are specified in the equipment specification.)
14. Where specified in individual equipment specifications; baseplates, soleplates, and fabricated steel frames shall be fitted with RK Fixators as manufactured by Unisorb, or approved equal.
    a. Fixators shall be installed at mounting surfaces for drivers.
    b. Fixators shall be a three-piece wedge leveling adjustment device incorporating a spherical washer assembly to provide true level height adjustment at each mounting surface for the equipment driver.

B. Fabricated Steel Frames:
1. Fabricated steel frames shall be plate or fabricated structural steel mounting plates with thickened steel mounting pads for bolting equipment to the mounting plate.
2. Fabricated steel frames shall be rectangular in shape, excepting fabricated steel frames for centrifugal refrigeration machines and pumps which may be T- or L-shaped fabricated steel frames to accommodate the equipment driver and accessories.
3. Fabricated steel frames for split case pumps shall include supports for suction and discharge elbows, if required by the specified configuration.
4. Perimeter members shall be I-beams or C-channel with a minimum depth equal to 1/10 of the longest dimension of the fabricated steel frame. Beam depth need not

exceed 14 inches provided that the deflection and misalignment is kept within acceptable limits as determined by the manufacturer.

5. Fabricated steel frames shall be furnished with mounting pads welded to the fabricated steel frame.
6. Surfaces of fabricated steel frames in contact with grout shall be sandblasted to white metal per SSPC SP-5.
7. Apply a high-strength epoxy primer as specified in paragraph 2.06 within 8 hours of sandblasting the fabricated steel frame.

C. Baseplates:

1. Baseplates shall be welded steel, cast steel, or cast iron with thickened mounting pads for bolting equipment to the baseplate.
2. Internal stiffeners shall be provided on all cast and fabricated baseplates and shall be designed to allow free flow of grout from one section of the baseplate to another.
3. The minimum acceptable opening in cross bracing and stiffeners shall be 2 inches high by 6 inches wide.
4. All welds shall be continuous and free from skips, blowholes, laps and pockets.
5. Baseplates shall be pre-grouted at the factory after all welding has been completed and prior to machining the mounting pads on the baseplate. Baseplates that have not been pre-grouted at the factory shall be pre-grouted in the field by removing the equipment from the baseplate, inverting the baseplate, and pre-grouting as specified in this Section.
6. The underside of baseplates shall be sandblasted to white metal per SSPC SP-5 prior to pre-grouting.
7. Pre-grouting shall be completed within 8 hours of sandblasting.
8. Pre-grouting shall fill the underside of the baseplate to the bottom edges of the baseplate.
9. Cast iron baseplates shall be sealed to prevent surface bleeding prior to shipment to the project site.

D. Plate Steel Soleplates:

1. Plate steel soleplates shall be not less than 1.0 inch thick for equipment with drivers greater than 30 horsepower.
2. Plate steel soleplates shall be furnished with grout keys/lugs or stiffeners on the underside of the soleplate.
3. Excepting grout keys, grout pour holes, vent holes, and attachment hardware (nuts, bolts, tapped holes, etc.) the underside of plate steel soleplates shall be a flat uniform horizontal surface.
4. The underside of plate steel soleplates shall be scribed with the words “THIS SIDE DOWN” using welding rod material prior to milling the mounting pads for equipment or mounting surfaces.
5. Plate steel soleplates without grout pouring holes are acceptable provided that no dimension of the soleplate (width or length) exceeds 18 inches.
6. Surfaces of plate steel soleplates in contact with grout shall be sandblasted to white metal per SSPC-SP-5 prior to shipment to the project site.

7. Apply a high-strength epoxy primer as specified in paragraph 2.06 within 8 hours of sandblasting the underside of plate steel soleplates.
8. Where equipment is fabricated or cast with feet or mounting surfaces that are not fastened to a common baseplate or soleplate, as in dry-pit bottom-suction pumps, the equipment may be supported on individual concrete piers or equipment pads in lieu of mounting on a common equipment pad and soleplate. In such instances, the equipment shall be supported at the feet or mounting surfaces on individual plate steel soleplates, which shall be leveled and grouted into place on the individual piers or equipment pads as specified in this section. Where multiple soleplates are installed for an equipment installation, soleplates shall be installed coplanar within 0.002 inch/foot.

E. Polymer Concrete Soleplates – Not used.

F. Corrosion Resistant FRP Baseplates – Not used.

2.05 GROUT FOR EQUIPMENT PADS

A. Epoxy Grout for Equipment Mounting:
1. Where epoxy grout is specified, grout for setting bearing surfaces of baseplates, soleplates, and fabricated steel frames on equipment pads shall be Epoxy Grout for Equipment Mounting as specified in Section 03 60 00. Where the term epoxy grout is used in the context of details and specifications for equipment mounting it shall mean Epoxy Grout for Equipment Mounting as specified in Section 03 60 00.

B. Cementitious Nonshrink Grout:
1. Where non-shrink grout is specified, Cementitious Non-shrink Grout, specified in Section 03 60 00, may be used for setting bearing surfaces of baseplates, soleplates, or fabricated steel frames. Where the term non-shrink grout or cementitious grout is used in the context of details and specifications for equipment mounting it shall mean Cementitious Non-shrink Grout as specified in Section 03 60 00. Training and quality control by the grout manufacturer's technical representative is not required for rigid equipment mounts installed with cementitious non-shrink grout.

2.06 EPOXY PRIMER

A. Epoxy primer shall be a high-strength, lead free, chrome free, and rust inhibiting two-component epoxy primer specifically designed for use on metal substrates and in conjunction with epoxy grout. The epoxy primer's bond strength to sandblasted metal shall not be less than 1500 psi. Epoxy primer shall be Phillybond Phillyclad 1000 Series or approved equal.

2.07 ANTI-SEIZE/ANTI-GALLING COMPOUND

A. Anti-seize or anti-galling compound shall be a molybdenum disulfide and graphite combination in aluminum complex base grease conforming to MIL-PRF-907E. Acceptable products include Jet Lube 550 by Jet Lube, Inc., E-Z Break by LA-CO, or approved equal.

2.08 PRODUCT DATA

A. The following information shall be provided in accordance with the product data requirements specified in Section 01 33 00:
   1. Equipment anchor calculations demonstrating compliance with paragraph 2.03 Equipment Anchor Design.
   2. Results of grout strength tests, as specified in paragraph 3.03 Grouting.
   3. Completed Rigid Equipment Mount Installation Inspection Checklist Forms (43 05 13-A), as specified in paragraph 3.02 Epoxy Grout Quality Control.
   4. List of Subcontractor's equipment installation staff that has completed epoxy grout manufacturer's grout installation training specified in paragraph 3.02 Epoxy Grout Training.

PART 3 EXECUTION

3.01 GENERAL

A. General Requirements:
   1. Roughen the underside of soleplates and fabricated steel frames and wipe with a residue-free solvent as recommended by the epoxy primer manufacturer before placement of the baseplate, soleplate, and fabricated steel frames on the equipment pad for leveling. Roughen surfaces of mounting plates that will be in contact with grout by power tool cleaning. Cleaning shall be performed by power wire brushing, power sanding, power grinding, power tool chipping or power tool descaling. Cleaning shall impart a minimum profile of 1.0 mil.
   2. Prior to placement on the equipment pad for leveling, exposed grout surfaces of pre-grouted baseplates shall be roughened and wiped with a residue-free solvent as recommended by the manufacturer of the epoxy grout used for pre-grouting.
   3. Not used.
   4. Grout for equipment mounting shall be as specified.
   5. Grouting for installation of equipment on equipment pads shall take place prior to connecting any field piping or electrical and instrumentation systems.
   6. Unless the Engineer or the City accepts an alternate installation procedure in writing, baseplates, soleplates, and fabricated steel frames shall be leveled and grouted with the equipment removed.
   7. Pumps shall be installed in accordance with this section and ANSI/HI 1.4 or ANSI/HI 2.4, as appropriate for the type of pumping equipment installed.
   8. Connecting piping with flexible connections and/or expansion joints shall be anchored such that the intended function of these joints is maintained in the piping system without imposing strain on the equipment connections.

B. Alternate Piping Connections:
   1. Where an equipment manufacturer's installation requirements include a rigid connection between the machine and connecting piping systems, the Subcontractor shall delete any flexible coupling (including equipment connection fittings) shown on the drawings and install the equipment in the following manner, in lieu of installing the flexible coupling:

a. The equipment pad shall be installed as shown on the details.
b. The baseplate, soleplate, or fabricated steel frames supporting the equipment shall be installed, leveled, and grouted in place as specified in this section.
c. The equipment shall be installed and aligned in place as specified in Section 43 05 14.
d. The piping shall be installed and aligned to the equipment connections and the field piping connections without welding one of the joints for one section of pipe between the equipment connection and the field piping and all valving. All flanged joints shall be bolted up and pressure-tested.
e. All piping shall be fully supported by supports designed to accept their full weight and thrust forces.
f. The final sections of piping shall be aligned with the equipment and field connections without the use of jacks, chain falls, or other devices to force it into alignment.
g. The final piping joints shall be welded only after the previous steps have been completed and accepted by the City.

3.02 EPOXY GROUT TRAINING AND QUALITY CONTROL

A. Epoxy Grout Training:
1. Prior to commencing rigid equipment mount installation work on equipment pads, the sub-contractor shall furnish the services of a grout manufacturer's technical representative to conduct a training school for the workers who will be using epoxy grout for rigid equipment mount installations. The school shall be not less than 4 hours in length and shall cover all aspects of using the products, including form construction for each equipment installation, surface preparation, mixing, application, void prevention/elimination, and clean up. This requirement, however, shall not be construed as relieving the sub-contractor of overall responsibility for this portion of the work. The epoxy grout manufacturer shall furnish a list of school attendees who have been satisfactorily trained to perform epoxy grout installation for equipment mounting.

B. Epoxy Grout Quality Control:
1. For equipment mounted with epoxy grout, the epoxy grout manufacturer's technical representative shall provide quality control services for epoxy grout installation in rigid equipment mounts. The epoxy grout manufacturer's technical representative shall be on site to inspect and verify that the installation personnel have successfully performed surface preparation, epoxy grout application, and Quality Control Inspection in accordance with these specifications for a representative portion of the epoxy grout installation work.
2. Specifically, the epoxy grout manufacturer's technical representative shall perform the following services for at least one rigid equipment mount installation for each equipment type and size installed with epoxy grout:
a. Inspect ambient conditions during various phases of epoxy grouting installation for conformance with the epoxy grout manufacturer's requirements.
b. Inspect the surface preparation of concrete substrates onto which epoxy grout materials are to be applied, for conformance to the specified application

criteria, including but not limited to substrate profile, degree of cleanliness, and moisture.

c. Inspect the surface preparation of the metallic substrates onto which the epoxy primer is to be applied.
d. Inspect the epoxy-primed metallic substrate for coverage and adhesion.
e. Inspect preparation and application of epoxy grout form work for conformance to the specifications.
f. Inspect and record that the “pot life” of epoxy grout materials is not exceeded during installation.
g. Inspect epoxy grout for cure.
h. Inspect and record that localized repairs made to grout voids conform to the specification requirements.
i. Conduct a final review of completed epoxy grout installation for conformance to these specifications.
j. Attest to conformance of the sub-contractor’s work by signing appropriate entries in the “Rigid Equipment Mount Inspection Checklist,” Form 43 05 13-A in Section 01 99 90.

3.03 INSTALLATION

A. Concrete Equipment Pad Preparation:
1. Roughen the top of the equipment pad after the concrete has reached its 28-day compressive strength.
2. Remove all laitance and defective or weak concrete.
3. Roughened surface profile shall be 0.25 inch amplitude, minimum.
4. Expose broken aggregate without dislodging unbroken aggregate from the cement matrix and without fracturing concrete and aggregate below the concrete surface.
5. Roughen using a light-duty (15 pounds or less), hand-held chipper with a chisel type tool.
6. Abrasive blast, bush-hammer, jack hammers with sharp chisels, heavy chipping tools, or needle gun preparation of concrete surfaces to be grouted are not acceptable.
7. Demonstrate removal of defective or weak concrete to the City prior to leveling.
8. The chipped surface of the concrete shall be such that the final elevation of the equipment pad provides the grout manufacturer’s recommended thickness between the surface of the equipment pad and the lower baseplate flange, underside of the soleplate, or underside of the fabricated steel frame.
9. All dust, dirt, chips, oil, water, and any other contaminants shall be removed and the surface protected with plastic sheeting until grout is installed.
10. Concrete equipment pad surfaces that have been finished smooth and level for use as leveling positions shall be protected from damage during chipping activities. Alternatively, leveling positions may be restored on chipped surfaces. Leveling positions shall be restored by installing leveling blocks or leveling plates for jackscrews on a high compressive strength epoxy putty (Philadelphia Resins,

Phillybond Blue 6A, or approved equal). Leveling blocks and leveling plates shall be installed level on the epoxy putty.

B. Leveling:
   1. Except where union rules require installation by another trade, all equipment and machinery shall be mounted and leveled by a Qualified Millwright.
   2. Use precision surveying equipment for leveling.
   3. Machinists' spirit levels will not be permitted for leveling purposes for any baseplate, soleplate, or fabricated steel frame with a plan dimension greater than 4 feet.
   4. Baseplates, soleplates, and fabricated steel frames shall be leveled to the tolerance specified or as otherwise required by the equipment manufacturer, if more stringent.
   5. An anti-seize or anti-galling compound specified in paragraph 2.07 shall be applied to all equipment anchor threads prior to beginning baseplate, soleplate, or fabricated steel frame leveling.
   6. All baseplates, soleplates, and fabricated steel frames shall be leveled against steel surfaces (jackscrew plates, leveling blocks, leveling nuts, support plates, or other steel surfaces). Use of other materials for leveling purposes is strictly and specifically prohibited.
   7. Leveling equipment and tools shall be stainless steel leveling blocks and shims, steel wedges, or jackscrews bearing on leveling plates.
   8. Leveling nuts may be used for leveling baseplates, soleplates, and fabricated steel frames weighing less than 200 pounds (including the weight of the equipment if leveled with the equipment on the mounting plate).
   9. Leveling blocks shall be stainless steel, 4 inches square and 1.5 inches thick with an open-ended slot terminating in the center for the equipment anchor.
   10. Leveling blocks shall be machined flat on all horizontal surfaces and placed under the baseplate or soleplate at each equipment anchor.
   11. Shims shall be pre-cut stainless steel, slotted for removal after grouting. Leveling blocks and shims shall be coated with a light oil just prior to beginning the leveling and grouting work. Shims shall be placed so the tabs on the shims are easily accessible.
   12. Clamp baseplates, soleplates, or fabricated steel frames in position (after leveling) by installing the equipment anchor nuts and washers.
   13. Bolt tension to fix the position of mounting plates during grouting shall be 30 to 60 percent of the final clamping force applied to clamp the mounting plate to the equipment pad.
   14. Prior to grouting, verify that the correct level and position of the baseplate, soleplate, or fabricated steel frame has been maintained after clamping it to the equipment pad.

C. Grouting:
   1. Design forms for a minimum of 6 inches hydrostatic head above the final elevation of the grout.

2. Install grout expansion joints at 4 to 6 foot intervals, perpendicular to the centerline of baseplates. Design expansion joints in accordance with the grout manufacturer's written instructions.
3. Coat forms with three coats of paste wax on all areas of the forms that will be in contact with the grout.
4. Wax forms before assembly.
5. Prevent accidental application of wax to surfaces where the grout is to bond.
6. Remove any foreign material, such as oil, sand, water, wax, grease, etc., from concrete surfaces that will contact grout before forms are installed.
7. Forms shall be liquid tight. Seal any open spaces or cracks in forms, or at the joint between forms and the foundation using sealant, putty, or caulking compound.
8. Vertical and horizontal edges of the grout shall have 45-degree chamfers as specified in equipment pad details. The 45-degree perimeter chamfer strip shall be located at the final elevation of the grout.
9. Match chamfers in concrete portions of the equipment pad.
10. Install block outs at all leveling positions to allow removal of leveling equipment and leveling nuts to be backed off after the grout has cured.
11. Coat jackscrews with a light oil or other acceptable bond-breaking compound prior to grouting.
12. Final elevation of grout on fabricated steel frames shall be at the top of the lower flange of the perimeter I-beams or C-channel.
13. Top of grout elevation for baseplates and soleplates shall be at least 0.125 inch but not more than 0.5 inch above the bottom or underside of the perimeter edge of the baseplate or soleplate.
14. Seal equipment anchor sleeves to protect the sleeved length of the anchor from contact with grout.
15. Wrap exposed portions of equipment anchors with duct tape to protect them from grout splatter and to prevent bonding to grout.
16. Adjust ambient temperature to maintain mounting plate, foundation, and grout temperatures to grout manufacturer's recommended temperature.
17. Mix grout for equipment mounting in accordance with the grout manufacturer's written recommendations.
18. Epoxy grout shall be placed in a manner that avoids air entrapment, using a head box to pour grout into the grout holes.
19. Place grout at one end of the baseplate or soleplate and work grout toward the opposite end to force the air out from beneath the baseplate or soleplate.
20. Pour grout through a head box into grout pouring holes.
21. When the head box is moved to the next grout hole, a 6 inch standpipe shall be placed over the grout hole and filled with grout.
22. Use of vibrating tools and/or jarring (rapping or tapping) forms to facilitate grout flow is not permitted during placement of epoxy grout.
23. Never allow the grout in the head box to fall below the top of the baseplate or soleplate once the grout has made contact with the baseplate or soleplate.

24. Grout placement shall be continuous until all portions of the space beneath the baseplate, soleplate, or fabricated steel frame have been filled.
25. Prepare subsequent batches of grout prior to depleting the preceding batch.
26. Maintain grout height in standpipes after the space under the baseplate, soleplate, or fabricated steel frame has been filled.
27. When the grout has started to take an initial set (typically this is determined by a noticeable increase in temperature and no flow of grout at the vent holes) the standpipes shall be removed and excess grout cleaned from all surfaces.
28. Check for leaks throughout grout pours. Leaks shall be repaired immediately to prevent formation of voids.
29. Check baseplate, soleplate, or fabricated steel frame level and elevation before the grout sets.
30. Cure grout in accordance with the grout manufacturer's written instructions.
31. Where specified in the individual equipment specifications, a grout sample shall be taken for each equipment pad.
    a. Samples shall be placed in a cylinder of sufficient size to yield three 2-inch cubes as test samples.
    b. Samples shall be tagged with project name, date, time, the equipment number, and ambient temperature at the time of placement.
    c. Place samples next to the foundation of the equipment being grouted and cure for 48 hours.
    d. Test grout samples in accordance with the grout manufacturer's recommendations.
    e. Grout samples shall be tested by the independent testing laboratory specified in paragraph 1.02 Quality Control by the Subcontractor.
    f. Test results shall be reported directly to the City.

D. Completion:
1. Upon acceptance by the City and the equipment manufacturer's representative and after the grout has reached sufficient strength, grout forms and block outs at leveling positions shall be removed. Leveling blocks and shims or wedges and support plates shall be removed, and leveling nuts and jack screws shall be backed off to allow the grout to fully support the baseplate, mounting block, or soleplate. Take care not to damage the grout during removal of extended shimming material or leveling equipment and tools.
2. The equipment anchor nuts shall be tightened, using calibrated indicating torque wrenches, to develop the full bolt tension specified in paragraph 2.03 Equipment Anchor Tension.
3. Equipment anchor nuts shall be tightened in increments of not more than 25 percent of the final torque value in an alternating pattern to avoid stress concentration on the grout surface. After tightening equipment anchor nuts to final values, apply additional wax, grease, or mastic to all exposed portions of the equipment anchor beneath the baseplate, soleplate, or mounting block.
4. After applying additional wax or mastic to exposed portions of equipment anchors, block outs (pockets) for access to leveling nuts, leveling blocks and shims, or

wedges shall be filled with the grout material installed under baseplates, soleplates, or fabricated steel frames and pointed after the equipment anchor nuts have been tightened to final values. Jackscrews shall be removed and holes in the baseplate, soleplate, or fabricated steel frames filled with a flexible sealant (silicone rubber) or a short cap screw.

5. Check for baseplate, soleplate, or fabricated steel frame movement (soft foot) by individually loosening and re-tightening each equipment anchor. Vertical movement at each equipment anchor shall be measured and recorded during loosening and retightening and shall not exceed 20 micrometers (0.001 inch). Vertical movement shall be measured using a magnetic-based dial indicator on the baseplate, soleplate, or fabricated steel frame referenced to the epoxy grout surface of the equipment pad or other approved method. Soft foot conditions shall be sufficient cause for removal and reinstallation of grout and baseplates, soleplates, or fabricated steel frames.
6. Check for grout voids by tapping along the upper surfaces of the baseplate, soleplate, or mounting block. Grout voids shall be sufficient cause for removal and reinstallation of grout and baseplates, soleplates, or fabricated steel frames. Grout voids shall be marked. At the discretion of the City, grout voids may be repaired as specified in Chapter 5, Section 3.16 of API RP 686.

3.04 FINAL INSPECTION

A. The City will conduct a final inspection with the Subcontractor for conformance to requirements of this section.

END OF SECTION

SECTION 43 05 14
MACHINE ALIGNMENT

PART 1 GENERAL

1.01 DESCRIPTION

A. This section specifies requirements for alignment of directly coupled mechanical equipment weighing 1000 pounds or more and/or greater than 100 horsepower furnished under this contract. Equipment direct coupled to the motor with drivers 100 horsepower and less and belt or chain driven machinery are specifically exempted from the requirements of this section.

1.02 QUALITY ASSURANCE

A. General:
   1. All equipment shall be aligned using laser alignment equipment to the tolerances specified by the subject equipment manufacturer or the criteria specified in this section, whichever is more stringent.

B. Alignment Criteria:
   1. Unless otherwise specified by more stringent manufacturers' requirements, all mechanical equipment affected by this section shall be aligned to the following criteria:

Maximum Tolerable Misalignment			
Speed, rpm, maximum	Short Couplings (distance between flex planes ≤ 4")		Spacer Shafts (angle at each flex plane in mils/inch or projected offset in mils/inch of spacer length)
	Offset (mils)	Angularity (mils/inch)	
600 and less	5.0	1.0	1.8
900	3.0	0.7	1.2
1200	2.5	0.5	0.9
1800	2.0	0.3	0.6
3600	1.0	0.2	0.3
7200	0.5	0.1	0.15

Notes:

1. *Soft foot (machine frame distortion) shall be not more than 2.0 mils for any speed.*
2. *Separately mounted equipment connected by offset universal joints are exempted from the offset and angularity requirements, but all units must be installed and leveled as specified in this section.*

C. Alignment Equipment:
   1. Alignment equipment used to perform the work required under this section shall employ laser alignment techniques to achieve the required tolerances. The equipment shall be computer based and its software shall be compatible with

current Windows® based spreadsheets and databases. The equipment shall employ a hand-held field computer using a graphic interface to determine actual alignment and necessary corrective action to bring equipment into required tolerance. The link between field measurement components and the computer shall be through cable, infrared, or wireless transmission.

1.03 REFERENCES

A. This section contains references to the following documents. They are a part of this section as specified and modified. Where a referenced document contains references to other standards, those documents are included as references under this section as if referenced directly. In the event of conflict between the requirements of this section and those of the listed documents, the requirements of this section shall prevail.

B. Unless otherwise specified, references to documents shall mean the documents in effect at the time of Advertisement for Bids or Invitation to Bid (or on the effective date of the Agreement if there were no Bids). If referenced documents have been discontinued by the issuing organization, references to those documents shall mean the replacement documents issued or otherwise identified by that organization or, if there are no replacement documents, the last version of the document before it was discontinued. Where document dates are given in the following listing, references to those documents shall mean the specific document version associated with that date, regardless of whether the document has been superseded by a version with a later date, discontinued or replaced.

Reference	Title
Shaft Alignment Handbook	Shaft Alignment Handbook, Third edition, John Piotrowski, Marcel Dekker Inc.

PART 2 PRODUCTS

2.01 EQUIPMENT

A. Laser alignment equipment shall be Rotalign® Ultra as distributed by Ludeca, Inc., of Doral, Florida, or approved equal.

2.02 ITEMS TO BE FURNISHED TO THE CITY:

A. The following shall be furnished to the City upon completion of all alignment work for the project or appropriate portion thereof and prior to substantial completion of the project or portion thereof:
   1. All alignment records, in both hard copy and in computer memory. The hard copy shall be signed and dated by the technician performing the alignment work and shall be witnessed by the City.

PART 3 EXECUTION

3.01 GENERAL

A. After machine base grouting as specified under Section 43 05 13, all machines mounted on baseplates or soleplates specified above shall be aligned as specified under this section.

B. Alignment work shall be performed by journeyman millwrights skilled in this type of work under the supervision of a technician trained in the use of the laser alignment by the manufacturer or vendor of the alignment equipment. The use of untrained laborers, carpenters or apprentices for this work will not be acceptable.

3.02 PROCEDURE

A. Sequence:

1. Machines supported on integral feet or support pads shall be leveled, grouted and aligned in the following order: driven machine; intermediate bearings or machines; and driver. Under certain circumstances, such as a diesel engine driving a generator, it may be preferable to reverse this order and set the driver first. The Contractor shall submit a written request for a reversal of the alignment order to the Engineer must approve any change in alignment order in writing before it will be allowed.

B. Alignment:

1. All machines shall be rough aligned without any connections to piping, electrical and instrumentation systems. Upon completion of all field connections, alignment shall be rechecked to demonstrate no change. If change has occurred, the sub-contractor shall eliminate any external forces affecting machine alignment.
2. Next, soft foot (machine frame distortion) shall be measured and brought to within the permissible tolerances (see paragraph 1.02 Alignment Criteria). Thereafter, the alignment shall be rechecked and the alignment process repeated if necessary to bring all machinery to final alignment tolerances.

3.03 VERIFICATION

A. Factory Personnel:

1. Where required by other sections in this project manual, factory authorized installation technicians representing the equipment manufacturer shall witness final alignment work. After completion of all alignment work, acceptance of the work shall be documented in writing by factory installation technicians.

B. Verification:

1. All alignment work shall be independently checked using the shaft and coupling spool method described in the Shaft Alignment Handbook. All final results of the alignment work shall be subject to inspection and verification by the City.

END OF SECTION

THIS PAGE INTENTIONALLY LEFT BLANK

SECTION 43 05 17
VIBRATION AND CRITICAL SPEED LIMITATIONS

PART 1 GENERAL

1.01 DESCRIPTION

A. This section specifies vibration and critical speed limitations for rotating mechanical equipment. Factory and/or field testing and vibration measurements shall be taken when specified in the individual equipment specification sections.

1.02 VIBRATION LIMITATIONS

A. General:
   1. Vibration frequencies shall span the range from 5.0 to 5000 Hz. Where specified, measurements shall be obtained while the installed equipment is operating within the specified speed range.

B. Centrifugal:
   1. Vibration levels shall conform to ANSI/HI 9.6.4 – Vibration Measurements for Allowable Level of Vibrations for Pumping Equipment or as specified below, whichever is more stringent.
   2. Machines With Sleeve Bearings:
      a. Unless otherwise specified, centrifugal machines with sleeve bearing shafts shall not exhibit unfiltered RMS readings for vibration displacement in excess of the following:

Shaft speed range, rpm	Displacement, peak to peak, mils
Up to 900	3.5
901-1800	3.0
1801-3000	2.5
3001-4500	2.0
Above 4500	1.6

      b. Displacement measurements shall be taken radially on the shaft at two points at each bearing, except for well pumps which shall be measured at top of motor. Measuring points shall be 90 degrees apart.
   3. Machines with Antifriction Bearings:
      a. Unless otherwise specified, centrifugal machines with antifriction bearing shafts shall not exhibit unfiltered RMS readings for vibration velocity in excess of 0.12 inch per second. Velocity measurements shall be taken on one point of each bearing housing.

C. Positive Displacement Machines:

1. Unless otherwise specified, positive displacement machines of the rotary, reciprocating and controlled volume types shall operate without any lateral or torsional vibration characteristics that may accelerate wear of the equipment. The sub-contractor shall provide manufacturer's certification that the manufacturer has inspected the machine under operating conditions and found it to comply with the requirements of this paragraph.

1.03 CRITICAL SPEED REQUIREMENTS

A. Unless otherwise specified, rotating mechanical equipment shall not exhibit critical speeds within the specified range of operating speeds. Critical speeds for equipment with rigid rotor systems shall be at least 20 percent greater than maximum operating speed. Critical speeds for equipment with flexible shaft-rotor systems shall be at least 15 percent below minimum operating speed and 20 percent above maximum operating speed.

PART 2 PRODUCTS

2.01 PRODUCT DATA

A. Manufacturer's certified data showing location of critical speeds in relation to operating speeds shall be provided as product data in accordance with Section 01 33 00.

PART 3 EXECUTION (NOT USED)

END OF SECTION

SECTION 43 05 21

COMMON MOTOR REQUIREMENTS FOR EQUIPMENT

PART 1 GENERAL

1.01 SUMMARY

A. Section Includes:
   1. Squirrel cage type, AC induction motors, 4 poles (3600 rpm nominal), shall be per NEMA MG1, Small or Medium.
   2. Special purpose motors with features or ratings which are not specified herein, are specified in the particular equipment specifications.
   3. Motors that are rated 460 Vac, 5 horsepower and larger, shall have 120 Vac motor space heater and a temperature switch output contact for high motor temperature (TSH) for remote monitoring and control.

1.02 RELATED SECTIONS

A. This section contains specific references to the following related sections.

B. Additional related sections may apply that are not specifically listed below.
   1. Section 26 24 19 Motor Control Centers

1.03 REFERENCES

A. This section contains references to the following documents. They are a part of this section as specified and modified. Where a referenced document contains references to other standards, those documents are included as references under this section as if referenced directly. In the event of conflict between the requirements of this section and those of the listed documents, the requirements of this section shall prevail.

Reference	Title
ABMA 9	Load Ratings and Fatigue Life for Ball Bearings
ABMA 11	Load Ratings and Fatigue Life for Roller Bearings
IEEE 112	Standard Test Procedures for Polyphase Induction Motors and Generators
IEEE 841	Standard for Petroleum and Chemical Industry- Premium-Efficiency, Severe Duty Totally Enclosed Fan-Cooled (TEFC) Squirrel Cage Induction Motors - Up to and Including 500 HP
NEMA ICS 2	Industrial Control and Systems Controllers, Contactors and Overload Relays Rated Not More Than 2000 Volts AC or 750 Volts DC
NEMA 250	Enclosures for Electrical Equipment (1000 volts maximum)

Reference	Title
NEMA MG 1	Motors and Generators
Department of Energy	Energy Policy and Conservation Act, Final Rules EERE-2010-BT-STD-0027-0117
UL 674	Electric Motors and Generators for Use in Division 1 Hazardous (Classified) Locations
UL 1004	Electric Motors

1.04 DEFINITIONS

A. Terminology used in this Section conforms with NEMA MG-1.

B. Motors covered in this specification are those defined in NEMA MG1 as Small (Fractional) and Medium (Integral) AC induction motors.

1.05 ADMINISTRATIVE REQUIREMENTS

A. Unit Responsibility: Where Unit Responsibility is specified in the driven equipment sections of these specifications, the motor supplier shall coordinate with the provider of the driven equipment to verify that the motor provided under this section is fully compatible with and meets the specified performance requirements for that equipment.

1.06 SUBMITTALS

A. Action Submittals:
   1. Procedures: Section 01 33 00.
      a. Copy of this Section, with each paragraph check-marked to indicate specification compliance or marked to indicate requested deviations from specification requirements.
      b. Check-marks (ü) to denote full compliance with a paragraph as a whole. Underline deviations and denote by a number in the margin to the right of the identified paragraph. The remaining portions of the paragraph not underlined will signify compliance. Include a detailed, written justification for each deviation.
      c. Failure to include a copy of the marked-up specification sections with justification(s) for any requested deviation will cause rejection of the entire submittal with no further consideration.
   2. Motor Data Sheets specified in this Section and Division 01.
      a. Motors in conformance with IEEE 841: Manufacturers to complete IEEE Standard 841 Data Sheet for AC Induction Motors.
      b. Motors not in conformance with IEEE 841: Motor supplier to complete Form 43 05 21-A in Section 01 99 90 with required factory data.
      c. Motor Speed-Torque curve, where specified.
   3. Routine Factory test data for polyphase motors: High-potential test.
   4. Factory test data, from required dynamometer tests, where specified.

5. Vibration level when measured in accordance with NEMA MG 1, for all IEEE 841 motors, and where elsewhere specified.
6. Motor heating curve, where specified,
7. Motor mounting, outline, dimensions, and weight.
8. Motor winding thermostat or thermistor, where specified.
9. Motor winding space heaters, where specified.
10. Motor nameplate data.

B. Informational Submittals:
1. Procedures: Section 01 33 00 and 01 78 23.
2. Submittal requirements for operation and maintenance manuals as per requirements of Section 01 78 23.

C. Closeout Submittals:
1. Procedures: Section 01 33 00 and 01 77 00.

1.07 QUALITY ASSURANCE

A. Factory Testing:
1. All polyphase motors shall be factory tested in conformance with routine tests per NEMA MG1 and IEEE 112. Provide the following tests:
a. Measurement of winding resistance.
b. No-load readings of current and speed at normal voltage and frequency.
c. Current input at rated frequency with rotor at standstill.
d. High potential test.

B. Where specified for use in corrosive or hazardous locations, motor testing shall additionally be per IEEE 841.

C. Test report shall be certified by the motor manufacturer’s test personnel and submitted to the Design-Builder.
1. For motors larger than 100 horsepower, test and submit results for the following:
a. Routine tests per NEMA MG1 and IEEE 112.
b. Provide tests as noted in paragraph 1.07 Factory Testing.
c. Test report shall be certified by the motor manufacturer's test personnel and submitted to the Design-Builder.
d. For motors larger than 200 horsepower, efficiency and power factor by Test Method B, IEEE 112. Submit Form B and B-2.

D. See Section 01 45 33 for additional inspection requirements.

1.08 DELIVERY, STORAGE AND HANDLING

A. Procedures shall be in accordance with Section 01 61 00.

PART 2 PRODUCTS

2.01 MANUFACTURERS

A. The following candidate manufacturers are capable of producing equipment and/or products that will satisfy the requirements of this Section.

B. The manufacturer's standard product may require modification to conform to specified requirements:
   1. Baldor
   2. General Electric
   3. Siemens
   4. US Motors
   5. WEG
   6. Or approved equal

2.02 PERFORMANCE/DESIGN CRITERIA

A. Service Conditions:
   1. Temperature: -25-degree C to +40 degree C.
   2. Altitude: 0 to 3300 feet above sea level minimum.
   3. Derate motors for higher ambient temperature and for higher altitude with motor size based on brake-horsepower.

B. Design Requirements:
   1. Operation: Continuous.
   2. Compliance: Energy Policy Act of 1992 (EPAct), Final Rule 2014.
   3. Tolerance: +/- 10-percent of rated voltage at rated frequency; +/- 5-percent of rated frequency at rated voltage.
   4. Standard design: NEMA Design B.

C. Service Factor (percent of additional horsepower):
   1. 1.15 for Sine-wave motors.
   2. Dual rating: 1.15 Sine-wave and 1.0 Inverter Duty for Inverter Duty motors.

D. Motor Efficiency:
   1. NEMA Premium™ efficiency electric motor, single-speed, polyphase, 1-500 horsepower, 3600-rpm 2-pole, 1800-rpm 4-pole, and 1200-rpm 6-pole (1-250 HP), squirrel cage induction motors, NEMA Design B, continuous rated.
   2. NEMA Standards Publication MG 1 2011, in Table 12-12.

Table 12-12
Full-Load Efficiencies for 60 HZ Premium Efficiency Electric Motors
Rated 600 Volts or Less (Random Wound)

Open Motors

HP	2 Pole		4 Pole		6 Pole		8 Pole	
	Nominal Efficiency	Minimum Efficiency	Nominal Efficiency	Minimum Efficiency	Nominal Efficiency	Minimum Efficiency	Nominal Efficiency	Minimum Efficiency
1	77.0	74.0	85.5	82.5	82.5	80.0	75.5	72.0
1.5	84	81.5	86.5	84.0	86.5	84.0	77.0	74.0
2	85.5	82.5	86.5	84.0	87.5	85.5	86.5	84.0
3	85.5	82.5	89.5	87.5	88.5	86.5	87.5	85.5
5	86.5	84.0	89.5	87.5	89.5	87.5	88.5	86.5
7.5	88.5	86.5	91.0	89.5	90.2	88.5	89.5	87.5
10	89.5	87.5	91.7	90.2	91.7	90.2	90.2	88.5
15	90.2	88.5	93.0	91.7	91.7	90.2	90.2	88.5
20	91.0	89.5	93.0	91.7	92.4	91.0	91.0	89.5
25	91.7	90.2	93.6	92.4	93.0	91.7	91.0	89.5
30	91.7	90.2	94.1	93.0	93.6	92.4	91.7	90.2
40	92.4	91.0	94.1	93.0	94.1	93.0	91.7	90.2
50	93.0	91.7	91.5	93.6	94.1	93.0	92.4	91.0

2.03 MATERIALS

A. Motor Frames:
   1. TEFC motors shall be cast iron.
   2. Aluminum frame motors are not permitted.

B. Stator Windings:
   1. Shall be copper with Class F minimum insulation not to exceed Class B temperature rise of 80-degree C at rated load and with Design B torque /current characteristics for all Medium (Integral) motors.
   2. Small (fractional) motors shall be supplied with Class F insulation where available.

C. Rotor material shall be aluminum or copper.

D. Fans shall be non-sparking fan blades.

E. Motor leads shall be non-hygroscopic.

2.04 MOTOR TYPES

A. General Requirements for motors 1/2 horsepower through 500 horsepower:
   1. Three phase, squirrel cage, with copper windings.
   2. Rated for full voltage starting and continuous duty.
   3. Rating shall be:

a. 460 volts, three-phase, 60-Hertz, as shown on the contract drawings.

4. General Purpose Type motors, which may also be called Type 1 per the project equipment specifications shall be:
   a. Open Drip Proof Motors shall be as defined per NEMA MG1, self-cooled by convection air.
   b. Weather-Protected Type I Motors (WP-I), shall be as defined per NEMA MG1, similar to ODP construction with addition of screens to prevent entry of rain, snow, and particles, or objects into the motor.
   c. Suitable for clean indoor and protected outdoor installations.
   d. Weather Protected Type II Motors (WP-II) shall be as defined per NEMA MG1, with maximum protection from entry of airborne particles, moisture and high velocity air. Suitable for unprotected outdoor installations.
5. Severe Duty Type Motors, which may also be called Type 2 per the project equipment specifications, shall be in accordance with IEEE 841.
   a. Totally Enclosed Fan-Cooled Motors (TEFC) shall be defined per NEMA MG1.
   b. Enclosure: totally enclosed, fan cooled, with external fan blowing air to the motor frame cooling fins for cooling.
   c. Applications: severe duty and most outdoor installations.

B. Motors Less Than 1/2 Horsepower:
   1. Type shall be:
      a. Squirrel cage, capacitor start with Class F insulation and copper windings.
      b. Fan motors rated 1/8 horsepower or less: split-phase or shaded-pole type.
   2. Rating shall be: 115 Volts, single phase, 60 Hz.

2.05 COMPONENTS

A. Inverter-Fed Polyphase Motors per NEMA MG1 Part 31:
   1. Applications: variable torque or constant torque loads, for vertical or horizontal motors with variable frequency drive controllers (VFD).
   2. Features shall include:
      a. Insulation design to meet 2000-Volt peak at a minimum of 0.1 micro-second rise time.
      b. Built-in motor winding protection as specified.
      c. Electrically insulated bearings or,
      d. Provide Electro Static Technology's AEGIS Shaft Grounding Ring for Bearing Protection or approved equal.
      e. The shaft grounding ring shall be solidly bonded per manufacturer's recommendations.

B. Vertical Motors:
   1. Features: Inverter duty or non-inverter duty with solid shaft P-base and high thrust bearing compatible with loads imposed by the driven equipment.

C. Thermal Protection:

1. Inverter duty motors:
   a. Motors up to 50 horsepower:
      1) Protection to be NEMA Type 2 bi-metallic thermal switch (Klixon) type.
      2) Motor Nameplate: Marked "OVER TEMP PROT 2" in accordance with NEMA MG 1 12.43.
2. Motors larger than 50 horsepower up to and including 250 horsepower:
   a. Unless another form of thermal protection is specified in the driven equipment specification, provide a NEMA Type 1 temperature sensing device embedded in the motor winding which is sensitive to motor running over temperature.
   b. Sensor: Wired to a temperature relay in a NEMA 4 box located near or on the motor, or to the variable frequency drive controller.
   c. Motor Nameplate: Marked "OVER TEMP PROT 1" in accordance with NEMA MG 1 12.43.

D. Motor Nameplates:
1. Materials: Engraved or stamped stainless steel.
2. Features shall be as follows:
   a. NEMA Standard MG 1 motor data.
   b. Permanently fastened to the motor frame.
   c. ABMA bearing identification number for motors meeting IEEE 841.
   d. NEMA nominal efficiency for all motors.
   e. NEMA nominal and minimum efficiency for motors meeting IEEE 841.
   f. UL frame temperature limit code for explosion proof motors.
   g. Space heater data.
   h. Over Temperature Protection Type Number.
   i. Temperature device rating and alarm and shutdown setpoint.
   j. Provide motor nameplates for motors with space heaters located in Class I, Division 2, Groups C, and D areas in accordance with NEC 501.125(B).

E. Conduit Boxes:
1. Provide oversized boxes, with split construction with threaded hubs and petroleum-resistant gaskets.
2. Conduit boxes can be rotated in order to permit installation in any of four positions 90 degrees apart.
3. Provide grounding lug located within the conduit box for ground connection.
4. Provide separate conduit boxes for temperature devices and space heaters.
5. Separate terminal box for any signal leads (RTD, thermistor, vibration transmitter, etc.).

F. Bearings:
1. Provide oil or grease lubricated ball bearings, angle contact roller bearings for axial thrust loads, and cylindrical bearings for radial-only loads.
2. Rated for a minimum L-10 life of 50,000 hours for direct-connected loads.

3. Cartridge type bearings will not be accepted.
4. Fitted with lubricant fill and drain or relief fittings.
5. Belt loads not to exceed forces calculated from NEMA MG 1 Table 14-1 and 14-1A.

G. Bearing lubrication shall be either grease or oil per the requirements in either 1 or 2:
1. Grease lubricated bearings:
a. Shall be for electric motor use only.
b. Grease shall be capable of higher temperatures associated with electric motors and shall be compatible with Polyurea-based greases.
c. Provide grease fittings, similar to Alemite™ type (or equivalent).
d. Shielded bearings with re-greasable provisions are permissible.
2. Provide oil lubricated bearings with externally visible sight glass to view oil level.

H. Lifting Eyes:
1. Provide lifting eyes with a safety factor of 5.
2. Provide one lifting eye for motors more than 50 pounds.
3. Provide two lifting eyes for motors over 150 pounds.

I. Winding Space Heaters when specified or shown:
1. Provide winding space heaters to prevent condensation.
2. Rating: 120 volts, single phase, 60 Hertz.
3. Motor nameplate to show space heater rating in watts and volts.
4. Provide terminal block in motor conduit box for heater leads termination.

2.06 FINISHES

A. Paint Finish:
1. Provide standard manufacturer paint finish.
2. Provide motors with semi-gloss finish, scratch and heat resistance electric motor paint.

PART 3 EXECUTION

3.01 EXAMINATION

A. Delivery Inspection:
1. Inspect driven equipment-motor assembly and components immediately upon delivery and unloading at the job site for damages.
2. Take photos of damage(s) if any, to substantiate the delivery inspection report.

3.02 INSTALLATION

A. Grounding of Motors:

1. Connect the motor feeder ground cable (green) to the grounding lug terminal in the conduit terminal box.

B. Supplemental Grounding of Motors:
1. Provide for motors fed from VFDs, all motors above 100 horsepower, and all motors in classified areas, where feasible:
   a. Bond the motor frame to the grounding grid/electrode system to provide supplemental grounding.

C. Field Coating of Motors:
1. Refer to the driven equipment specification section and Section 09 90 00 for coating requirements.

3.03 FIELD QUALITY CONTROL

A. Field Testing:
1. Measure winding insulation resistance of motors to no less than 10-megohm with a 1000-Vac megohmmeter.
2. Perform motor phases current imbalance testing for motors 20 horsepower and larger.
3. Test motors for proper rotation prior to connection to the driven equipment.
4. Perform thermographic survey per NETA ATS, for motors over 100 horsepower.

B. Field Inspection:
1. Compare equipment nameplate data with drawings and specifications.
2. Inspect physical and mechanical condition.
3. Inspect anchorage, alignment, and grounding.
4. Verify the installation of breather/drain fittings as specified herein.
5. Check for proper connections of space heaters, winding and RTDs and or thermostats.
6. Visually check for correct phase and ground connections.

C. Manufacturer Services:
1. Provide for motors larger than 250 HP or where specified or shown on the drawings.
   a. Provide services to the driven equipment manufacturer for the inspection and certification of the installation of the motor driven equipment.
   b. Provide assistance in the startup and operational testing of the motor driven equipment.

3.04 SYSTEM START UP

A. Commissioning Test:
1. Provide where specified or shown on the drawings.
   a. Provide assistance during the commissioning test of the motor driven equipment.

B. See Section 01 91 14 for testing requirements.

3.05 CLOSEOUT ACTIVITIES

A. Complete closeout submittals. Provide the operation and maintenance manual of the motor(s). Include testing result information in the O&M manual.

END OF SECTION

SECTION 43 11 33

HELICAL SCREW ROTARY LOBE POSITIVE DISPLACEMENT BLOWERS

PART 1 GENERAL

1.01 DESCRIPTION

A. Scope: This Section specifies a belt driven or direct drive base mounted, single-stage, oil-free, air-cooled, variable frequency drive helical screw rotary-lobe positive displacement air blowers for Biological Nutrient Removal (BNR) tank aeration. Each blower shall include impellers, impeller housing, electric motor, variable frequency drive, sound enclosure, and specified appurtenances.

B. Type: The blowers shall be rotary lobe, positive displacement type with horizontal flow and twisted screw lobe involute impellers designed for aeration air service. The blowers shall be capable of providing airflow at the specified rate and pressure. The blower shall consist of the following components:

1. Intake filter-silencer
2. Rotor housing
3. Male and female rotors, bearings and seals
4. Electric motor
5. Variable frequency drive Local control panel
6. Sound enclosure
7. Associated transmitters, valves, and instrumentation and controls as required for operation detailed in this Section (43 11 33).

C. Equipment List:

Item	Equipment No.
Aeration Blower 1	BLW-450
Aeration Blower 2	BLW-460
Blower 1 VFD	VFD-450
Blower 2 VFD	VFD-460

D. Definitions: Terminology used in this Section conforms to the following definitions:

1. Standard Cubic Feet per Minute (scfm): The volumetric flow rate in cubic feet per minute at 68 °F, 14.70 pounds per square inch absolute pressure, and 36-percent relative humidity.
2. Absolute Pressure: Total pressure measured from an absolute vacuum. Units are pounds per square inch absolute (psia).
3. Gauge Pressure: The amount by which total pressure exceeds atmospheric pressure. Units are pounds per square inch gauge (psig).
4. Inlet Pressure: The upstream pressure prior to any losses associated with the blower assembly.

E. Operating Conditions: The blower units will be installed indoors at a wastewater

treatment plant to supply compressed air to the BNR tanks. Ambient air temperatures vary from 33 Deg. F to 107 Deg. F and relative humidity varies from 35% to 100%. The blower room will not be conditioned and is expected to have temperatures and humidity similar to outdoor conditions. The plant site is located at approximately 30-feet above sea level. Blower supply air will be taken from inside the blower room.

F. Seismic: Equipment, skid, and supports shall be braced per Division 01.

1.02 QUALITY ASSURANCE

A. References:

1. This section contains references to the following documents. They are a part of this section as specified and modified. Where a referenced document contains references to other standards, those documents are included as references under this section as if referenced directly. In the event of conflict between the requirements of this section and those of the listed documents, the requirements of this section shall prevail.
2. Unless otherwise specified, references to documents shall mean the documents in effect at the time of Advertisement for Bids or Invitation to Bid (or on the effective date of the Agreement if there were no Bids). If referenced documents have been discontinued by the issuing organization, references to those documents shall mean the replacement documents issued or otherwise identified by that organization or, if there are no replacement documents, the last version of the document before it was discontinued. Where document dates are given in the following listing, references to those documents shall mean the specific document version associated with that date, regardless of whether the document has been superseded by a version with a later date, discontinued or replaced.

Reference	Title
ANSI H 35.1	Alloy and Temper Designation Systems for Aluminum
ASME B16.5	Pipe Flanges and Flanged Fittings
ASHRAE 52.2	Method of Testing General Ventilation Air-Cleaning Devices for Removal Efficiency by Particle Size
ASTM A36	Carbon Structural Steel
ASTM A48	Gray Iron Castings
ASTM A276	Stainless Steel Bars and Shapes
ASTM A778	Welded, Unannealed Austenitic Stainless Steel Tubular Products
IEEE 112	Standard Test Procedures for Polyphase Induction Motors and Generators
IEEE 519	Recommended Practices and Requirements for Harmonic Control in Electrical Power Systems
ISO 1940 G2.5	Balance Quality Requirements of Rigid Rotors
ISO 1217	Displacement Compressors – Acceptance Tests
NEMA MG 3	Sound Level Prediction for Installed Rotating Electrical Machines
NFPA 79	Electrical Standard for Industrial Machinery
UL 508A	Standard for Industrial Control Panels

B. Unit Responsibility:
   1. The Contractor shall assign unit responsibility, as specified in Section 43 05 11-1.02 Unit Responsibility, to the WWSS for provisions of all equipment specified in this Section. The WWSS is the unit responsibility manufacturer and has unit responsibility, as specified in Section 43 05 11-1.02 Unit Responsibility, for both the equipment assembly specified in this Section and the Local Control Panel specified in Section 40 92 00, and variable frequency drives specified in Section 26 24 19.

C. Shipment, Protection, and Storage:
   1. Equipment shipment, protection, and storage shall conform to the requirements specified in Division 01.

D. Factory Tests: Factory test all equipment specified in this Section.
   1. Test Plan: Submit a test plan prior to proposing a test date. The Engineer will review the test plan and provide comments within 14 days of receipt. Schedule test date a minimum of 30 days after the factory test plan is designated No Exceptions Taken or Make Corrections Noted per Section 01 33 00. At a minimum, the test plan should include:
      a. Proposed test date and location.
      b. Identification of manufacturer's test engineer responsible for executing the test plan.
      c. Operating conditions to be verified.
      d. Conversions required, if any, to calculate the equivalent flow rate and pressure to simulate operating conditions specified in this Section.
      e. Test plan definitions, abbreviations, and parameters.
      f. A detailed description of the test procedures.
      g. Test facility arrangement including piping and instrument locations.
      h. A detailed description of the test facility instruments including type, make, model, and range.
      i. Instrument calibration results and sensor accuracy.
      j. Equations, conversions, and calculations to be used to convert raw data into test results.
      k. Proposed test report outline.
   2. Factory testing shall include the following activities:
      a. Conduct tests with a fully assembled blower assembly. Blower assembly includes local control panel with HMI, inlet filter, blow off valve, blow off silencer, cooling system, VFD, sound enclosure, check valve, and any other appurtenances. Testing the blower core alone is not allowed. Temporary wiring to connect control panel to process instrumentation and equipment is allowed but requires documentation of each connection.
      b. Motor testing per Section 43 05 21.
      c. Conduct test at the voltage and frequency specified in this Section.
      d. Prior to testing, include a visual inspection of the blower unit and run to demonstrate stable operation.

e. Operate each blower at each test point for a duration sufficient to demonstrate all readings have stabilized.
f. Test each blower at operating Conditions A, B, and C specified in this Section.
    1) Inlet pressure and inlet temperature shall be considered ambient pressure and temperature at the test facility. Measure relative humidity with a calibrated hygrometer.
    2) Calculate discharge pressure as the sum of the discharge static pressure and velocity pressures.
g. Measure blower discharge temperature at the specified operating conditions. Discharge temperature shall be the sum of the static temperature and the velocity temperature. The measured temperature is between the static and total temperature. The measured temperature shall be converted to discharge temperature in accordance to ISO-1217. A recovery factor of 0.65 shall be used.
h. Measure power consumption using the blower line voltage and ampere draw.
i. Measure air flow using an ASME flow nozzle, a concentric square edged orifice, or a Herschel type Venturi tube.
j. Measure blower speed by noting the VFD frequency and calculate using the speed reducer ratio of the devise used (belt drive, gear drive etc.)
k. Calibrate electric power instruments with primary standards. Measure the transformation ratio and phase angle of current transformers at the range of burdens prevailing in the circuit. Measure the transformation ratio of potential transformers at the approximate primary voltage and frequency prevailing.
l. Computations may assume that the test air is an ideal gas. Convert raw data to test point data in accordance with paragraphs 5.2.2 of ASME PTC 13.

3. Factory Test Report: Once testing is complete and the data evaluated, submit a test report. Test report shall include, as a minimum:
    a. The entire test plan including any revisions made between the submittal of the test plan and the actual test.
    b. Manufacturer, model, and serial number of each unit.
    c. Raw data and the time of each recording.
    d. Equations, conversions, and calculations used to convert raw data into test results.
    e. Verification that the specified operating requirements have been met. At a minimum, test results shall report the following:
        1) Differential pressure
        2) Shaft power
        3) Blower speed
        4) Volumetric efficiency
        5) Theoretical airflow volume
        6) Actual airflow volume
        7) Actual slip
        8) Flow variance
        9) Discharge temperature

10) Actual power
11) Power variance

f. Motor test results per applicable requirements in motor specification 43 05 21.
g. Factory tested control description with documentation, and a table of data points provided for SCADA monitoring and control, with associated engineering units and range, where applicable. Provide as an attachment to the final report.
h. Comments provided based on review of the test plan (if any) as well as agreed upon resolution.
i. Signature of a manufacturer's representative certifying the test results as accurate.

4. See Section 01 45 33 for additional requirements for testing and inspection.

E. Manufacturer's Experience:
1. Equipment furnished under this Section shall be of a design and manufacture that has been successfully used in similar applications. The manufacturer shall have furnished similar equipment for wastewater treatment facilities that have been in successful operation.

1.03 SUBMITTALS

A. Action Submittal
1. Procedures Section 01 33 00:
2. A copy of this specification section, with addendum updates included, and all referenced and applicable sections, with addendum updates included, with each paragraph check-marked to indicate specification compliance or marked to indicate requested deviations from specification requirements. A check mark (□) shall denote full compliance with a paragraph as a whole. If deviations from the specifications are indicated, and therefore requested by the Contractor, each deviation shall be underlined and denoted by a number in the margin to the right of the identified paragraph, referenced to a detailed written explanation of the reasons for requesting the deviation. The Engineer shall be the final authority for determining acceptability of requested deviations. The remaining portions of the paragraph not underlined will signify compliance on the part of the Contractor with the specifications. Failure to include a copy of the marked-up specification sections, along with justification(s) for any requested deviations to the specification requirements, with the submittal shall be sufficient cause for rejection of the entire submittal with no further consideration.
3. A copy of the contract document electrical control single line diagrams and process and instrumentation diagrams relating to the submitted equipment, with addendum updates that apply to the equipment in this section, marked to show specific changes necessary for the equipment proposed in the submittal. If no changes are required, the drawing or drawings shall be marked "no changes required". Failure to include copies of the relevant drawings with the submittal shall be cause for rejection of the entire submittal with no further review.
4. Completed Certificate of Unit Responsibility attesting that the Contractor has assigned, and that the manufacturer accepts, unit responsibility in accordance with

the requirements of this Section and Section 43 05 11-1.02 Unit Responsibility. No other submittal material will be reviewed until the certificate has been received and found to be in conformance with these requirements.

5. Marked copies of specification 26 09 16 with addendum updates included.
6. Installation list to document compliance with specified manufacturer's experience.
7. Manufacturer's specifications verifying the equipment performance, weight, and materials of construction.
8. Blower performance curves showing pressure-capacity, power-capacity, efficiency-capacity curves, and wire-to-air efficiency for each specified operating condition. Show capacity in scfm and pressure in psi. Performance curves shall clearly indicate the inlet conditions.
9. Operating noise levels for the motor and blower combination. Present noise as sound pressure levels (SPL) in decibels as read on the "A" weighting network of a standard sound level meter (dBa); measure in relation to a reference pressure of 0.0002 microbar.
10. Motor data as specified in Section 43 05 21.
11. Manufacturer's catalog data and shop drawings confirming dimensions, weight, construction, and installation details of blower and all associated equipment. Include spatial requirements showing clearances required for installation and maintenance.
12. Descriptive control sequences of the blower's manual and automatic operation.
13. Written control description that describes the application program code in non-technical terms using clear sentence structure that includes sequence of events, interlocks, and action on fault conditions. Hard copy and electronic copy shall be provided in native program and PDF.
14. Equipment control panels:
    a. Control panel submittals in accordance with 40 92 00.
    b. Schematic wiring diagrams, including internal wiring connections and connections for remote inputs and outputs.
    c. Drawings showing scaled front and interior views.
    d. Bill of materials of components.
    e. Marked product literature for all components.
    f. Overall panel layout interconnection diagrams, and communication network diagrams, as specified in Division 40.
15. Marked product literature for all instruments and controls.
16. Process system controls testing Action submittal items per Division 40.
17. Human machine interface (HMI) submittal shall include the following:
    a. Detailed description of HMI graphics in terms of operator control set points, status, and indications.
18. Shop and field coating systems. Include catalog literature and specifications.
19. Operation and maintenance information per Section 01 78 23 including:
    a. Final reviewed shop drawing submittal.
    b. Range and setting of pressure relief valves, instruments, timers, and other related devices.
    c. Maintenance manual.

20. Manufacture's Installation Certification Form 43 05 11-A per Section 01 99 90.

B. Closeout Submittal
1. Procedures Sections 01 33 00 and 01 77 00.
2. Manufacturer's Installation Certification Section 43 05 11-Form A
3. Manufacturer's Instruction Certification Section 43 05 11-Form B.
4. Operating and maintenance information specified in Section 01 78 23.
5. Process system control testing closeout submittal items per Division 40.
6. Motor data specified in Section 43 05 21.

1.04 PERFORMANCE REQUIREMENTS

A. Each blower shall be designed for continuous duty under the following performance requirements:

Operating Condition	Equipment Number BLW-450 BLW-460
Fluid Type	Ambient Air
Condition A[1]	
Inlet pressure, psia	14.7
Inlet temperature, degrees F	107
Relative humidity, percent	100
Minimum discharge pressure, psig	11
Minimum discharge volume, scfm	360
Condition C[3]	
Inlet pressure, psia	14.7
Inlet temperature, degrees F	33
Relative humidity, percent	35
Minimum discharge pressure, psig	11
Minimum discharge volume, scfm	110

Notes:
1. Condition A shall be the blower's rated condition. This condition shall impose the greatest pressure requirement at the highest airflow through the machine.
2. Condition B is the estimated operating requirement for the blower under conditions which will impose the greatest flow through the machine. The blower overload protection system shall ensure that the motor is never required to produce more than its nameplate rating. Use of the motor's service factor rating to meet this requirement will not be accepted. [Not used]
3. Condition C represents turndown and the required minimum air flow rate.

B. Each blower motor shall be designed as follows:

Item	Equipment Number VFD-450 VFD-460
Blower	
Discharge piping connection size, inches	4
Operating speed	Variable
Electric Motor	
Type	per this Section
Horsepower, maximum	30
Voltage/phase	460/3
Variable Frequency Drives	Included

C. Control Requirements:

1. General: Each blower shall be provided with an integral control panel to contain the machine's start/stop, pressure/volume and speed controls, as well as monitoring and safety/shutdown systems. The controls shall be programmable logic controller (PLC) or microprocessor based with a human machine interface (HMI). Unless otherwise specified, electrical control circuits shall operate on 120 volts AC, single phase derived from the 480 V power supply provided to the Blower System. No external 120 V power supply will be provided.
2. Start-Up/Shutdown: The blower shall be capable of being manually started and stopped from an HMI located on the face of the integral control panel, or automatically from SCADA. Once start has been initiated, no further operator intervention shall be required.
3. SCADA: The blower control panel shall be provided with a dedicated Industrial Ethernet network card to support connection to the existing SCADA system. All process indications, equipment status, and alarms shall be provided through the network connection. Provide hardwired signals for remote monitoring and control, as listed herein.
4. Programming: SCADA controls, implemented separately, shall require manufacturer coordination for integration and system testing of the blowers.

PART 2 PRODUCTS

2.01 MANUFACTURERS

A. The Engineer believes the following candidate manufacturers are capable of producing equipment and/or products that will satisfy the requirements of this Section. This statement, however, shall not be construed as an endorsement of a particular manufacturer's products, nor shall it be construed that named manufacturers' standard equipment or products will comply with the requirements of this Section. Candidate manufacturers include:

1. Aerzen
2. Atlas Copco
3. Or approved equal

B. Modifications to the contract drawings may be necessary to accommodate an alternative candidate manufacture and to comply with the requirements of this Section.

2.02 MATERIALS

A. Materials of components shall be as follows:

Component	Material
Blower base frame	Steel, ASTM A36
Casing	Cast iron, ASTM A48
Rotors	Heat treated stainless steel, ASTM A484 or AISI 1043
Shaft	Heat treated stainless steel, ASTM A484 or AISI 1043
Blow off silencer or discharge silencer	Stainless steel, ASTM A778
Anchor bolts	Stainless steel, ASTM A276, Type 316
Noise reduction enclosure	Steel sheet metal

B. Materials specified are considered the minimum acceptable for the purposes of durability, strength, and resistance to erosion and corrosion. The Contractor may propose alternative materials for the purpose of providing greater strength or to meet required stress limitations. However, alternative materials must provide at least the same qualities as those specified for the purpose.

2.03 EQUIPMENT

A. General: Blowers shall be fully packaged and include a pair of rotary screw/lobes enclosed in a casing, electric motor, regulation, and control system mounted on a common base and fully enclosed in a steel sound dampening enclosure. Compression shall be accomplished as the rotor shafts rotate and progressively reduce the space between the casing and the rotary screw/lobes as the air is moved from the inlet end to the discharge end. Blowers shall be rated for continuous service and capable of variable speed operation.

B. Inlet Filter: Supply each blower with one combination inlet filter silencer. Filter media shall have an efficiency of 90 percent by weight per ASHRAE 52.2 and a synthetic dust equivalent to separation > 95 percent @ 10 microns. The inlet filter silencer shall be suitable for the specified operating environment. Size filter and silencer for the airflow rate of each blower.

C. Foundation: No special foundations shall be required other than equipment pad specified within drawing package. There shall be only 4 easily accessible anchor points.

D. Casing: Casing shall be of one-piece construction with separate side plates that are bolted and pinned to the housing. Materials shall be close-grained cast iron ASTM A48

ribbed to prevent distortion under the specified operating conditions. Inlet and outlet shall be flanged connections, not thread.

E. Rotors and Shaft: Each male and female twisted screw rotor shall be of drop forged single-piece construction. Rotors shall have an asymmetrical profile that keeps leakage losses at a minimum to ensure high efficiency. Rotors shall be dynamically balanced, operate without rubbing, nor require lubrication. Each shaft shall be supported by anti-friction bearings and sized to control the axial location of the impeller/shaft in the unit.

F. Bearings: Shafts shall be supported on both ends by high precision antifriction type bearings rated for a minimum B-10 life of 100,000 hours. They shall be on both ends of the rotor for proper alignment. There shall be one set of roller bearings on the drive end and one set of double row angular contact bearings for proper axial positioning of the timing gear end. Bearing shall absorb all axial and radial loads generated during operation.

   1. Provide AEGIS SGR Bearing Protection Ring, or approved equal, on either the drive end or the non-drive end of the motor to discharge capacitive induced shaft voltage.

G. Timing Gears: The impellers shall be timed by a pair of single helical cut gears or timing gears fitted on the rotor shafts to maintain the rotors correct position relative to each other. When used, timing gears shall have straight cut gear teeth to prevent any axial thrust. For helical cut gears, the associated bearings shall be designed to account the axial thrust. Helical cut or timing gears and bearings shall be oil lubricated; grease lubrication shall not be acceptable. Oil change interval to be a minimum of 2 years of 16,000 hours, whichever comes first.

H. V-Belt Drive: Each blower shall be supplied with a V-belt drive that shall be of the high-capacity type, oil and head resistant. Drive shall be designed for a minimum service factor of 1.4 times the operating (bHp), or 1.1 times the motor nameplate Hp, whichever is larger to all ow a minimum of 1.4-service factor based on the maximum blower bHp. Belt tensioning shall be automatic without the use of any soring devices or interaction on the part of the operator. Sheaves shall be dynamically balanced regardless of the operating speed and hydraulically mounted on the blower drive shaft.

I. Seals: Shaft seals shall consist of carbon rings guided in steel rings. The carbon rings are to be free floating for radial self-adjustment along the rotor shaft. Oil seal shall be a threaded screw seal to create air circulation through the thread toward the bearings. There shall be a vent to atmosphere between the oil and air seal.

J. Gaskets: All gaskets shall be asbestos free.

K. Pressure Safety Valves: Pressure relief valves for air shall be ASME certified, Watts Figure 41A, Lonergan L14/L40 Series, or approved equal. Size and pressure settings shall be as specified or as required for the service intended.

L. Pressure Safety and Check Valves: Each package shall be supplied with a single pressure safety valve on the discharge side of the blower mounted downstream of the discharge silencer and upstream of the check valve. The safety valve shall be set to

protect the machine from exceeding its maximum pressure rating and shall be sized to pass 100% of the design flow. Each package shall be supplied with one check valve that shall be installed on the discharge line. The check valve shall be full-bore low pressure-drop, flapper type design with a steel body and steel flap embedded in Viton with full-contact seals. Pressure losses produced by the check valve shall be included in the entire package performance calculation.

M. Base: Each package shall be supplied with one combination base frame/discharge silencer. The base frame is to be constructed form welded carbon steel designed to maintain alignment of the blower internal components and the drive during operation. It shall be designed to resist distortion while being installed on vibration isolating mounts. The manufacturer shall supply a stainless steel grounding lug fully welded to the base.
   1. Each package shall be supplied with vibration isolating feet with a minimum efficiency of 80-percent. The manufacturer shall be responsible for attenuating noise and vibration in the package such that no special installation base shall be require nor shall any additional measures be required to reduce vibrations from the package being transmitted to the base or the piping.

N. Silencer: The silencer shall be a chamber type design for maximum sound attenuation and shall not use internally any absorption materials of any kind (fibrous or otherwise). The silencer shall be fabricated of single shell of pressure vessel quality steel with continuous welds, the silencer must be subject to a pressure test for tightness and strength at a minimum of 1.65 times the maximum design pressure. Insulation shall be provided surrounding the discharge temperature at the inlet of the blowers as low as possible. Discharge silencer performance losses shall be included in the entire package pressure calculations. Discharge silencer shall use stainless-steel wool for maximum sound attenuation. Silencer is to be ASME pressure vessel certified.

O. Auxiliary Devices:
   1. Provide expansion joints at the blower discharge connections. Expansion joints shall be medium temperature formed bellows type.
   2. Adaptors and connective fittings between the blower and the fixed piping, as specified in the Drawings, shall be provide by the manufacturer to accommodate increases and deduction in pipe diameter around the blower equipment. Connections to discharge piping shall be ASME 150-lb flange, with ASME B16.5 bolt pattern.

P. Instrumentation:
   1. General:
      a. Supplied instrumentation shall be new, free from defects, and rated for the installation. Instruments shall bear a listing mark from a Nationally Recognized Testing Laboratory (NRTL) acceptable to the Authority Having Jurisdiction (AHJ).
      b. Supplied instruments shall be factory calibrated and field tested under actual operating conditions by the blower manufacturer.

2. At a minimum, each package shall be supplied with the following instruments or provisions to provide equivalent readings in the digital readout panel and required signals for controlling the related parameters.
   a. One inlet filter differential pressure gauge.
   b. One inlet pressure transmitter.
   c. One discharge pressure switch.
   d. One discharge temperature switch.
   e. One discharge temperature indicator.
   f. One discharge pressure indicator.

Q. Oil: Each blower shall receive its initial oil fill at the factory. Oil to be fully synthetic and rated for 16000 hours of operation between change intervals.

R. Motors: Motors shall conform to the requirements of Section 43 05 21. Motor enclosures shall be TEFC.

S. Adjustable Frequency Drives: Requirements for Blower's adjustable frequency drive shall be coordinated by the blower manufacturer and shall meet the requirements of Section 26 24 19.

2.04 CONTROLS

A. Control Panels:
   1. Provide an integral control panel rated NEMA 4X and constructed of powder coated carbon steel. The control panel shall control the blower and all appurtenant devices required in this Section. The controls shall be programmable logic controller (PLC) based. The components shall be factory wired to the control panel for power supply and control in accordance with Section 26 09 16 and 40 92 00.

B. Control Devices:
   1. Provide the following control devices in the control panel:
      a. Programmable Logic Controller (PLC) or microprocessor to control the blower while in local control mode and monitor the blower in any control mode.
      b. The control panel shall have the capability of communicating with the plant SCADA system via an Industrial Ethernet based protocol.
         1) Communication protocol:
            a) EtherNet/IP
      c. Required timers, contacts, relays, transformers, controllers and other accessories necessary for the blowers to operate as described in this Section.
      d. A liquid crystal display (LCD) touchscreen human machine interface (HMI) shall be provided for input of operating set points, alarm set points, monitoring blower operation, and to acknowledge or clear alarm conditions. HMI shall display blower operational status and alarms and provide start and stop controls. HMI shall indicate and provide the following operating conditions, alarms and controls:

1) Appropriate readings and alarms from instruments connected to the local control panel
2) VFD fault
3) Maintenance advisories
4) Service advisories for air filter and oil change
5) Local/remote selection
6) Start and Stop blower controls
7) Reset alarm control
8) Control panel power on/off
9) Blower Run status
10) Common alarm
11) Common fault

C. Control Description:
1. The blower shall be controlled, and alarms shall be activated as follows:
   a. Based on the Local/Remote selection at the blower local HMI:
      1) When Remote is selected, the blower shall operate based on commands from the plant SCADA system. Blower shall start when a run command is received. Blower shall receive a speed command from the plant control system and communicate the speed command to the VFD.
      2) When Local is selected, the blower can be started/stopped and speed controlled from the blower local HMI.
   b. Interlocks shall be activated regardless of operating mode as long the condition exists. Interlocks shall only be resettable via the HMI on the local control panel.
   c. High pressure, high temperature, low pressure, low oil pressure, and VFD fault conditions include an alarm threshold and an interlock (shutdown) threshold.
   d. Local control capability from the blower VFD shall be disabled for proper operation and protection of the blower.
2. Blower control set points shall per set per manufacturer recommendations.

D. Interlocks:
1. The blowers shall be interlocked to shut down in any mode of operation on the following conditions and require manual reset:
   a. High pressure
   b. High temperature
   c. Low pressure
   d. Low oil pressure
   e. VFD fault

E. Alarms:
1. Blower control panel shall be capable of generating the following alarms for each blower. All alarms shall require manual-reset:
   a. High pressure

b. High temperature
c. Low pressure
d. Low oil pressure
e. VFD fault

F. Remote Input and Outputs:
1. Signals between the blower local control panel and blower VFD are to be implemented via hardwired signals. Signals shall include the following, as a minimum:
a. To VFD:
1) Start/stop command
2) Speed command
3) Ready to run
b. From VFD:
1) VFD fault
2. The blower control panel shall provide the following alarms, control signals, and status signals to/from the plant SCADA system. Signals shall be communicated over the Industrial Ethernet network connection to the plant SCADA system. Signals shall include the following, as a minimum. Additionally, include any other monitoring and alarm points recommended by the blower manufacturer. Coordinate parameters with the PCS system Programmer per Division 40.
a. Control Inputs:
1) Remote call to run
2) Speed set point
b. Status and Alarm Outputs:
1) Appropriate readings and alarms from instruments connected to the local control panel
2) Run time
3) Maintenance advisories
4) Service advisories for air filter and oil change
5) Local/remote selection
6) Reset alarm control
7) Control panel power on/off
8) Blower Run status
9) Blower ready
10) Common alarm
11) Common fault
12) Fault cause
13) VFD fault

2.05 COATINGS

A. Motor, enclosure, drives and appurtenances shall receive shop primer and shop

coating per the manufacturer's standard coatings. If any damage to the paint system occurs, the equipment shall be repainted as directed by the Engineer.

2.06 SPARE PARTS

A. The following spare parts shall be provided for each blower as specified in Section 01 61 00:
   1. Complete set of matched V-belts
   2. One complete set of gaskets
   3. Two inlet filters
   4. Three oil filters
   5. One set of special tools required for blower maintenance

B. See Section 01 61 00 for additional requirements for spare parts.

PART 3 EXECUTION

3.01 INSTALLATION

A. The packaged screw blower shall be installed in accordance with the manufacturer's written recommendations and requirements of Sections 43 05 11. The installation and initial operation shall be certified on Form 43 05 11-A included in Section 01 99 90.

B. Equipment Anchor Design:
   1. The size (diameter) of anchors for fastening equipment mounting frame to equipment pad shall be as specified by the equipment manufacturer.
   2. Equipment anchor embedment and edge distance shall comply with contract drawings.
   3. The Contractor shall furnish equipment anchor calculations. Equipment anchor calculations shall be furnished as product data and submitted with equipment submittals. Equipment anchor calculations shall be sealed by a registered structural or civil professional engineer licensed in the State of California. See Section 01 88 15 for requirements.

3.02 FIELD TESTING

A. Each packaged blower shall be field tested in accordance with the requirements of Sections 01 91 14. After installation of blower equipment, the manufacturer shall provide one trip for up to two 8-hour days of testing and commissioning services to verify the installation and conduct an acceptance test under actual operating conditions. Testing and commissioning of blower equipment shall consist of a minimum of 4 hour test runs for each blower.
   1. The manufacturer shall perform a physical check of the blower installation, perform safety checks, and perform function testing of the equipment.
      a. Functional testing shall consist of 4 hours of operation of each blower with vibration, temperature, mass flow, and pressure readings. In addition, motor amp readings shall be recorded at 60-minute intervals during blower testing.

B. Manufacture shall provide a written field test/start up report after completion of testing.

C. Coordinate testing with Division 40 Systems Integrator and Programmer to perform testing of the packaged blower system. Provide blower PLC system with pre-loaded code to Division 40's Systems Integrator and Programmer for factory acceptance testing of the Industrial Ethernet data exchange between blower PLC and plant control system at the Systems Integrator's facility. Blower vendor shall assist with testing as required, up to two 8-hour days of testing.

3.03 TRAINING

A. Provide a minimum of 4-hours of classroom and hands on training, conforming to the requirements of Section 01 43 33. Training shall be certified on Form 01 79 00-A specified in Section 01 99 90.

END OF SECTION

SECTION 43 23 03

GENERAL REQUIREMENTS FOR CENTRIFUGAL PUMPS

PART 1 GENERAL

1.01 DESCRIPTION

A. Scope:

1. This section, when referenced in the detailed specification section, provides minimum requirements applicable to centrifugal pumping equipment furnished under this contract. More restrictive requirements, where found in individual pump specifications, supersede requirements of this section.
2. "Detailed pump specification," "detailed specification," "individual pump specification," "referencing section," or words of similar import in this section, mean the specification section where the requirements for specific pump performance are presented. "Pumping unit," whenever and wherever used, means the complete pumping assembly, including driver (whether engine, turbine, or motor) and includes accessories such as variable-speed drives required for motor operation, gear reducers, intermediate shafting and bearings, flywheels, and supports for equipment furnished with the pump.

B. Definitions:

1. The following definitions apply for classifying pumps specified in this and referencing sections:
   a. General:
      1) Terminology and definitions in this section follow those established in American National Standards Institute (ANSI)/Hydraulic Institute (HI) 9.1 through 9.5, unless otherwise noted.
   b. Solids-bearing Liquids:
      1) Liquids to be pumped containing, or assumed to contain, solids that require appropriate pump design considerations and/or materials of construction. Solids-bearing liquids are liquids with settleable solids exceeding 50 milligrams per liter (mg/L) and include wastewater, stormwater, primary effluent, mixed liquor, return sludge, return activated sludge (RAS), and similar services.
   c. Clear Liquids:
      1) Liquids to be pumped mostly free of deleterious solids. Potable water, raw water, secondary effluent pumping, and similar services are clear liquids.
   d. Efficiency:
      1) For the purposes of this section and sections referencing this section, efficiency, as related to pumps, is the ratio of the pump output power (water horsepower [hp]) divided by the pump input power (brake horsepower) required to deliver the total head, with meanings as defined in ANSI/HI 1.2.3.8 and ANSI/HI 2.2.3.8. For column-type pumps, efficiency is computed inclusive of inlet, bowl, column, and discharge head losses.
   e. Net Positive Suction Head, 3 Percent Reduction (NPSH3):
      1) For the purposes of this section and sections referencing this section,

NPSH3 means the value of net positive suction head (NPSH) resulting in a reduction of 3 percent in the developed pump discharge head when the pump is tested in accordance with procedures established by ANSI/HI. NPSH3 is the successor designation to net positive suction head required (NPSHR). Where NPSHR is used in the contract documents it means NPSH3.

f. NPSH Margin:
   1) For the purposes of this section and sections referencing this section, “NPSH margin,” wherever used, means net positive suction head available (NPSHA) divided by the candidate pump’s NPSH3 for the specific operating condition in question.

g. POR:
   1) Preferred operating region as defined in ANSI/HI 9.6.3.

h. AOR:
   1) Allowable operating region as defined in ANSI/HI 9.6.3.

1.02 TYPE

A. Provisions and requirements contained in this section apply specifically to centrifugal pumps, both vertical and horizontal, commonly falling into the generic types covered by ANSI/HI 1.1 through 1.4, and 2.1 through 2.4. This section does not apply, except by specific reference, to positive-displacement pumps of any type.

1.03 REFERENCES

A. This section contains references to the following documents. They are a part of this section and any referencing section as specified and modified. Where a referenced document contains references to other standards, those documents are included as references under this section as if referenced directly. The following order of precedence prevails in the event of conflict between the requirements of this section or any referencing section and those of the listed documents (in the order of primacy):
   1. The referencing section
   2. This section
   3. The referenced document

B. Unless otherwise specified, references to documents mean the documents in effect at the time of advertisement for bids or invitation to bid (or on the effective date of the agreement if there were no bids). References to documents mean the replacement documents issued or otherwise identified by the organization if referenced documents have been discontinued, or, if there are no replacement documents, the last version of the document before it was discontinued. Where document dates are given in the following listing, references to those documents mean the specific document version associated with that date, regardless of whether the document has been superseded by a version with a later date, discontinued, or replaced.

Reference	Title
ABMA 9	Load Ratings and Fatigue Life for Ball Bearings

Reference	Title
ABMA 11	Load Ratings and Fatigue Life for Roller Bearings
AISC	American Institute of Steel Construction—Manual of Practice
ANSI/API 610	Centrifugal Pumps for Petroleum, Petrochemical and Natural Gas Industries (also referenced as ISO 13709-2009)
ASME B46.1	Surface Texture, Surface Roughness, Waviness and Lay
ANSI/HI 1.1–1.6	Rotodynamic (Centrifugal) Pumps
ANSI/HI 2.1–2.4	Rotodynamic (Vertical) Pumps
ANSI/HI 9.1–9.5	Pumps – General Guidelines for Types, Applications, Definitions, Sound Measurements and Documentation
ANSI/HI 9.6.1	Rotodynamic Pumps—Guideline for NPSH Margin
ANSI/HI 9.6.2	Centrifugal and Vertical Pumps for Allowable Nozzle Loads
ANSI/HI 9.6.3	Rotodynamic Pumps (Centrifugal and Vertical) Guideline for Allowable Operating Region
ANSI/HI 9.6.4	Rotodynamic Pumps—Vibration Measurements and Allowable Values
ANSI/HI 9.6.6	Rotodynamic Pumps for Pump Piping
ANSI/HI 9.6.8	Rotodynamic Pumps—Guideline for Dynamics of Pumping Machinery
ANSI/HI 9.8	Pump Intake Design
ANSI/HI 11.6	Submersible Pump Tests
ANSI/HI 14.6	Rotodynamic Pumps for Hydraulic Performance Acceptance Tests
API 686/PIP REIE 686	Recommended Practices for Machinery Installation and Installation Design
ASME B18.8.2	Taper Pins, Dowel Pins, Straight Pins, Grooved Pins, and Spring Pins (Inch Series)
ASME Code	ASME Boiler and Pressure Vessel Code
ASTM A27	Steel Castings, Carbon, for General Application
ASTM A36	Carbon Structural Steel
ASTM A148	Steel Castings, High Strength, for Structural Purposes
ASTM A322	Steel Bars, Alloy, Standard Grades
ASTM A564	Hot-Rolled and Cold-Finished Age-Hardening Stainless Steel Bars and Shapes
ASTM A571	Austenitic Ductile Iron Castings for Pressure-Containing Parts Suitable for Low-Temperature Service
ASTM A995	Standard Specification for Castings, Austenitic-Ferritic (Duplex) Stainless Steel, for Pressure-Containing Parts, Grades 2A, 3A, or 6A
ASTM B148	Aluminum-Bronze Sand Castings
AWWA C213	Fusion-Bonded Epoxy Coating for the Interior and Exterior of Steel Water Pipelines
AWWA C550	Protective Epoxy Coatings for Valves and Hydrants
NSF/ANSI 61	Drinking Water System Components – Health Effects

Reference	Title
IEC 61298-2	Process Measurement and Control Devices. General Methods and Procedures for Evaluating Performance Tests Under Reference Conditions
ISO 1940-1:2003	Mechanical Vibration—Balance quality requirements for rotors in a constant (rigid) state—Part 1: Specification and verification of balance tolerances
ISO 9001	Quality Management Systems—Requirements, 3rd Edition (2000)
ISO 10816-1	Mechanical Vibration—Evaluation of Machine Vibration by Measurement on Non-rotating Parts—Part 1: General Guidelines, Annex B, Table B.1. Class I, II or II, as applicable. For the purposes of this specification, Annex B of ISO 10816, Part 1 forms a part of this specification and ISO 10816, Part 1.
ISO 10816-3	Mechanical Vibration—Evaluation of Machine Vibration by Measurement on Non-rotating Parts—Part 3: Industrial machines with nominal power above 15 kW and nominal speeds between 120 r/min and 15000 r/min when measured in situ, Annex A, Table A.1 and A.2. For the purposes of this specification, Annex A of ISO 10816, Part 3 forms a part of this specification and ISO 10816, Part 3.
ISO 10816-6	Mechanical Vibration—Evaluation of Machine Vibration by Measurement on Non-rotating Parts—Part 6: Reciprocating machines with power ratings above 100 kW, Annex A, Table A.1, machine vibration classification number 3. For the purposes of this specification, Annex A of ISO 10816, Part 6 forms a part of this specification and ISO 10816, Part 6.
ISO 10816-7	Mechanical Vibration—Evaluation of Machine Vibration by Measurement on Non-rotating Parts—Part 7: Rotordynamic Pumps for Industrial Applications, Including Measurements on Rotating Shafts, Annex A, Tables A-1 and A-2 Category II as applicable. For the purposes of this specification, Annex A of ISO 10816, Part 7 forms a part of this specification and ISO 10816, Part 7.
MIL STD 167-2	Mechanical Vibrations of Shipboard Equipment (Reciprocating Machinery and Propulsion System and Shafting)

1.04 DESIGN REQUIREMENTS, ALL PUMPS:

A. General:

1. Conform equipment furnished under sections referencing this section to the objective of paragraph 6.1.1, ANSI/API 610, and ensure that the equipment and “auxiliaries” are designed for at least a 20-year service life and 3 years of “uninterrupted operation.” Select all components associated with the rotating elements in the drive train, including equipment supports and supports for rotating elements, that are designed to function without damage or disassembly at reverse rotational speeds up to 130 percent of maximum operational speed during flow reversals through the pump. Ensure that the complete pumping unit operates without overload on any component at any point along the pump’s entire full-speed operating curve. Furnish pumps required by virtue of the specified operating

conditions to operate against a closed valve or throttled for any period of time exceeding 5 seconds with drivers sized to operate continuously at the power requirement for that condition even though the power requirements at the rated condition may be less.

2. With the exception of submersible pumps and the inlet connection for pumps designed to operate in open forebays or wetwells, ensure that pump connection nozzles are designed for the loads and moments stipulated in ANSI/HI 9.6.2. Where ANSI/HI 9.6.2 does not cover a specific pump type or category, or where that document is silent on allowable nozzle loads or a particular type of nozzle load (e.g., thermal pipe strain), have the Contractor furnish documentation from the manufacturer attesting to the limitations on loads and moment forces that can be tolerated on each connection and recommended connection details to be used.

B. Pump Selection:

1. Proven designs:

a. Ensure that pumps furnished under sections referencing this section are proven designs that have been in similar conditions of service with no objectionable performance characteristics for a verifiable period.

b. The Contractor may propose alternative equipment that cannot meet the requirement for a proven design under this paragraph, subject to additional documentation requirements and under the following conditions:

1) The proposed design has been in successful operation under similar conditions of volute or bowl, discharge case and nozzle size, impeller design (including number of vanes), pumped fluid, head, capacity, rotation, and NPSHA, but at a higher speed for a verifiable period.

2) The proposed design has been in operation in designs where both larger and smaller nozzle size pumps have been in service for a verifiable period, and impeller design (including number of vanes, plus or minus one vane in pumps with four or more vanes), pumped fluid, head, capacity, speed, and NPSHA are similar to that for the proposed installation and within one synchronous speed higher or lower than that indicated in the detailed specification.

3) In addition to the installation list required under this paragraph, provide dimensional drawings, bill of materials, and historical (certified) shop test results for candidate pumps documenting performance including, but not limited to head, capacity, speed, and NPSHR, and limit of stable hydraulic operation based on the onset of suction recirculation, if available. Results should match or bracket the specified performance and two or more candidate pump results may be required.

c. If the proposed pump is not a proven design under either of the above paragraphs, have the manufacturer demonstrate, by operation of a test pump in a fully equipped hydraulic test facility, that the proposed pump in the size and at the speed proposed with the proposed impeller design will have acceptable operating characteristics under the conditions specified for the proposed installation. Set up the test pump and perform a witnessed demonstration prior to designing, fabrication, and testing of any of the equipment proposed for the specific installation.

2. General Performance Criteria:

a. Ensure that pumps furnished under this section and any referencing section operate without loss of head due to cavitation or vibration over the entire specified range of flow and head conditions and are specifically selected for NPSH margin requirements detailed in paragraph 1.04 NPSH margin limitations. Pump selections that do not provide the specified margin will be rejected.

3. General Design Criteria:

a. Select pumps furnished under sections referencing this section that are designed in accordance with applicable portions of ANSI/HI 1.1–1.4, 2.1–2.4, 9.6.2, 9.6.3, 9.6.4, 9.6.6, and 9.6.8 and the requirements of this section. Select pumps that are specifically designed to pump the fluid described in the detailed specification and to operate without clogging or fouling caused by material in the pumped fluid at any operating condition within the range of service specified. Clogging or fouling conditions may be of any cause, demonstrated by a 5 percent or greater capacity drift within 2 hours of sustained operation.

b. Unless otherwise noted or specified, slope pump head capacity curves in one continuous curve within the specified operating conditions. Do not permit points of reverse slope inflection capable of causing unstable operation within the specified zone of continuous-duty operation. Pumps with head/capacity curves with a reverse inflection are specifically prohibited if these characteristics will cause unstable operation within the specified range of operating conditions and where startup/shutdown conditions entail operation against a slow opening/closing valve.

c. Ensure that column-type (vertical-turbine, vertical-column solids-handling, and mixed-flow) pumps have bells selected to provide intake velocity of not less than 3.5 feet per second (ft/s) or more than 4.0 ft/s when operating at the maximum specified flow or the flow resulting from the lowest specified operating head at maximum speed, whichever is greatest (“peak flow”). Select pump discharge column sizes to limit the calculated average velocity at peak flow to no more than 12 ft/s.

d. Ensure that pumps specified to operate at constant-speed function without loss of head or capacity due to cavitation or excessive vibration over the entire specified range of flow and head conditions defined by the region bounded by Condition Points A, B, and C and any other continuous-duty operating condition specified in the detailed specification referencing this section, and select pumps to place Condition Point C in the detailed specification within the POR, or a modified POR if stipulated in the detailed pump specification.

e. Ensure that pumps specified to operate at variable-speed function without loss of head or capacity due to cavitation or excessive vibration over the entire specified range of flow and head conditions defined by the region bounded by Condition Points A, B, and C and any other continuous-duty operating condition specified in the detailed specification referencing this section. Ensure that unless otherwise specified in the section referencing this section, acceptance criteria include the following:

1) Ensure that Operating Condition Point C and any other continuous-duty operating point specifically required in the detailed specification reside within the region defined by the POR, or in a modified POR if stipulated in the detailed pump specification.

2) Unless otherwise noted in the detailed specification referencing this section, Operating Condition Point A may reside in the area outside the POR; Condition Point C will be located within the POR, or in a modified POR if stipulated in the detailed pump specification; and Condition B will preferably be located within the POR, or within 5 BEPQ percentage points (in terms of flow) outside the POR so long as Condition Point C resides in the POR or the stipulated modified range.

4. POR:
   a. Unless otherwise specified, the POR for a given pump is as defined in ANSI/HI 9.6.3.
   b. The detailed specifications may stipulate a narrower POR than indicated in ANSI/HI 9.6.3.
   c. Do not let suction-specific speed (Nss) exceed 8,500, unless otherwise indicated in the detailed specifications.
   d. For high-Nss pumps (greater than 8,500) and other conditions as determined by the Engineer, a narrower stable operating region may be defined in the detailed specifications and then identified in ANSI/HI 9.6.3 for the POR. The detailed specifications take precedence over this section.
   e. The detailed specification sections identify the duty points that must be within a pump's POR and those that may be within the AOR and take precedence over this section.

C. Critical Speeds and Natural Frequencies:
   1. General:
      a. The criteria of this paragraph applies to pumps, provided that the foundation and support details provided at the time of pump design are accurate. Repair or replace pumps exhibiting adverse behavior after installation from resonance, vibration, or fatigue at no cost to the City. The criteria apply to the equipment in "like-new" condition as well as the "as-worn" condition (i.e., when parts, individually and as a composite, reach the manufacturers' maximum tolerances). Critical speed and natural frequency data submittal requirements depend upon the pump:
         1) For the more critical pumps that are covered under paragraph 1.05, the Contractor is required to submit analytical reports confirming requirements on critical speeds and natural frequencies prior to pump fabrication as specified in that paragraph
         2) Unless otherwise specified, for constant-speed pumps and variable-speed pumps with suction size less than 6 inches diameter, no critical speed submittal is required
   2. Lateral rotor and structural dynamics:
      a. Ensure that the complete pumping unit, composed of the entire rotating group and related frames, supports, enclosures, housings, and casings, is free from critical speeds from 15 percent below to 25 percent above the operating speeds required to achieve the specified performance characteristics (critical avoidance zone). A critical speed is defined as any damped natural frequency with a logarithmic decrement less than +0.3 that has an interference with a

primary excitation order in the critical avoidance zone. Analyze backward rotation for rubber-bearing vertical-column pumps. The critical avoidance zone, interferences, and possible critical speeds can be illustrated on a natural frequency map as presented in the figure below. In the figure, three natural frequencies are shown with forward and backward modes. Only two of those modes, 1F and 2F, have interferences with primary excitation orders. Whether these are critical speeds is determined by the value of log decrement at the intersection. Note that higher order modes, such as 2F, have the same log decrement criterion as the first mode.

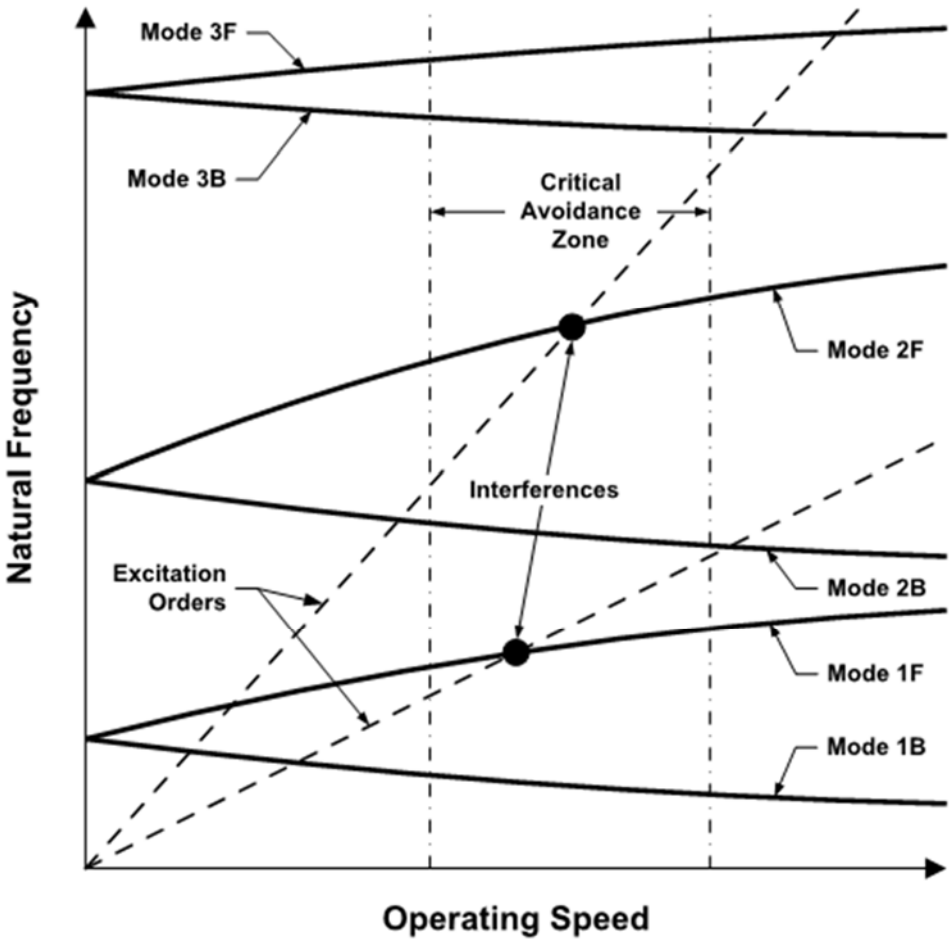

b. Process sensitivities are such that operation at infinitely variable speed within the specified operational conditions is an absolute requirement. Any remedy imposing a locked-out speed interval or intervals will not be considered an acceptable remedy for identified critical speeds. Acceptable remedies include combinations of adjustments in rotor geometry or materials, and the substitution of energy-absorbing couplings. Other remedies may be considered so long as they are justified in writing and the proposal is sealed and signed by the design professional retained by the manufacturer to perform the system mass elastic system analyses.

3. Torsional rotordynamics and combined shaft stress:

a. Ensure that the complete rotating group is free from critical speeds from 15 percent below to 25 percent above the operating speeds required to achieve the specified performance characteristics (critical avoidance zone). A critical speed is defined as any damped natural frequency with a logarithmic decrement less than plus 0.3 that has an interference with a primary excitation order in the critical avoidance zone.
b. If efforts to remove torsional critical speeds are unsuccessful, perform a combined shaft stress analysis to demonstrate that the response does not adversely affect the entire rotating group fatigue life. Ensure that the combined shaft stress analysis considers any speed in the critical avoidance zone and during startup, shutdown, or motor control transients if synchronous motors are specified.
c. For constant-torque applications, ensure that the pump-rotating group is free from torsional response that produces combined (steady plus alternating torque induced) stresses exceeding 50 percent of the material's fatigue limit or 30 percent of the material's elastic limit (but no more than 18 percent of the material's ultimate tensile strength) if relevant fatigue data for the selected material are not available.
d. For variable-torque applications (including variable-speed pumps, vertical pumps, and pumps with large overhung loads) ensure that the pump rotating group is free from torsional response that produces combined (torsional steady and alternating) peak shear stresses at points of stress concentration (calculated in accordance with the requirements of paragraph 1.04E.3 Torosional Shaft Stresses) that exceed 50 percent of the material's fatigue limit or 4 percent of the material's ultimate tensile strength (as per United States Military Standard [MIL STD] 167-2) if relevant fatigue data for the selected material are not available.
e. Document the source of fatigue data used in lieu of elastic or ultimate strength ratios in the analysis report submittal.

D. Impeller clearances, vane-passing frequency, and impeller keyways:
1. Ensure that the radial clearance between the tip of the impeller vane and diffuser or volute vanes is not less than 3 percent and 6 percent, respectively, of impeller diameter. Select a pump that is designed so that internal geometry does not cause uneven flow distribution at impeller vane inlets.
2. Ensure that impeller vane combinations are not an even multiple of diffuser vanes in column-type pumps.
3. Cut impeller keyways for multistage column-type pumps at differing positions and provide equal angular spacing on the impeller shaft to avoid multiple simultaneous vane-passing pulses.

E. Component design criteria:
1. General:
a. Unless otherwise specified, ensure that combined stresses in steel frames and supports does not exceed those permitted by the American Institute of Steel Construction (AISC) Manual of Practice. Ensure that combined stresses in cast, forged, rolled, or fabricated pressure-retaining components, frames, and supports does not exceed that allowed for the given material in Section VIII,

Division 1 of the American Society of Mechanical Engineers (ASME) Code. Ensure that design pressures for pressure-retaining parts are not less than 50 percent greater than the pump's shutoff head at the manufacturer's listed maximum operating speed. Ensure that the pump casing strain at any head on the full-speed operating curve (including allowances for increases caused by specified multistage applications) do not result in distortions at the bearing housings greater than the maximum allowable by the bearing manufacturer to provide the specified bearing life.

b. The term "combined stresses" in this section means the sum of operating stresses, including stresses induced by dynamic and static forces as developed via the analysis procedures stipulated in this section. Static forces (x, y, z, and moments in planes) include the relevant maximum nozzle loads specified in ANSI/HI 9.6.2 or as stipulated by the pump manufacturer. Dynamic forces include both steady-state and transient stresses induced by operating conditions within the zone of operation established by the specified operating conditions.

2. Anchorage and Equipment Mounts:

a. The Contractor shall hold the pump manufacturer responsible for the design of the anchor-bolting system and equipment supports for each separately mounted component furnished under the detailed specification. Conform anchorage and equipment support requirements for pumps to the requirements of Section 43 05 13.

b. Select anchor bolts and connecting bolts for pumps and assemblies supported by other assemblies furnished under this section, or sections referencing this section, that are designed in accordance with Section 01 88 15. Ensure that all operation and maintenance (O&M) manuals for pumps and assemblies contain criteria for anchor and baseplate bolt torque values.

c. Ensure that equipment mounts for vertical (column- and volute-type) pumps weighing more than 1,000 pounds, with discharge nozzles 6 inches in diameter and greater, employ soleplates conforming to the requirements of Section 43 05 13. Provide soleplate mounting conforming to Section 43 05 13 for separately supported components in the pump drive system. Fabricated steel supports regardless of design, and the nature of the structural shapes used for such proposed supports, will not be accepted.

d. Select soleplates that are designed to span openings for equipment connections and provide access to maintenance points. Ensure that soleplates are of sufficient section to key, not less than 1 inch, into the supporting grout provided for bonding the soleplate to the structure. Provide soleplates of sufficient size to bolt the pump base to the soleplate without encumbering the anchor bolts required for clamping the soleplate to the structure.

e. Select equipment mounts for horizontal pumps that are designed in accordance with Section 43 05 13 and ANSI/HI 1.3.8- and ensure that they provide common support for the pump and motor (and flywheel, if one is specified). Conform baseplate bolting to assumptions contained in ANSI/HI 9.6.2.

f. Use tapered dowel pins when required in the detailed specification to record the final position of machine bases on soleplates or pump baseplates. Where specified, harden and machine-ground dowel pins, conforming to the

requirements of ASME B18.8.2. Conform holes for tapered dowels to the requirements set forth in Appendix A of ASME B18.8.2.

3. Torsional Shaft Stresses:
   a. Calculate shaft stresses using the following equation and the stress concentration factors in the tables below:

$$S = S_{cf} \times \frac{G \times D \times \Delta_{\Theta}}{2 \times L}$$

where:

S = stress, pounds per square inch (psi)

S_{cf} = stress concentration factor, dimensionless

D = minimum shaft diameter at point of concentration, inches

Δ_{Θ} = twist in shaft between adjacent masses, radians

L = effective length between masses, inches

G = shear modulus of shaft material, psi

   b. Ensure that the S_{cf} to be applied at changes in shaft diameter is as follows:

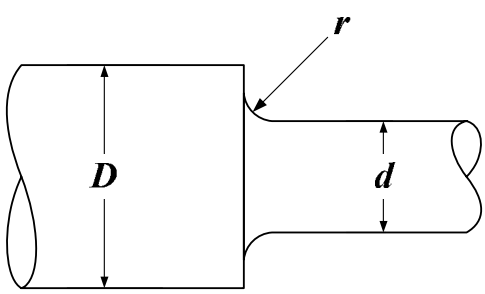

Shaft diameter ratio D/d = 1.05

r/d	S_{cf} [a]
0.0025	2.67
0.0100	1.84
0.0200	1.58
0.0300	1.47
0.0400	1.39
0.0500	1.34
0.1000 and greater	1.22

Shaft diameter ratio D/d = 1.50

r/d	S_{cf} [a]
0.0025	4.05
0.0100	2.54
0.0200	2.07
0.0300	1.85
0.0400	1.72
0.0500	1.62
0.1000 and greater	1.40

   c. Ensure that the S_{cf} to be applied at circumferential shaft grooves is as follows:

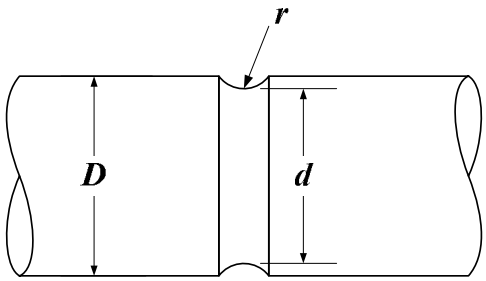

Shaft diameter ratio D/d = 1.05

r/d	S_{cf} [a]
0.0025	3.73
0.0100	2.34
0.0200	1.92
0.0300	1.74
0.0400	1.64
0.0500	1.57
0.1000 and greater	1.39

Shaft diameter ratio D/d = 1.30

r/d	S_{cf} [a]
0.0025	5.04
0.0100	2.82
0.0200	2.24
0.0300	1.99
0.0400	1.84
0.0500	1.73
0.1000 and greater	1.49

d. Ensure that the S_{cf} to be applied at the roots of keyways is as follows:

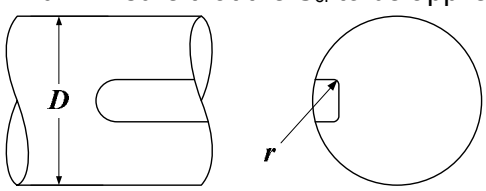

r/D	S_{cf} [a]
0.0025	4.35
0.0100	3.20
0.0200	2.64
0.0300	2.43
0.0400	2.32
0.05 00	2.25
0.1000 and greater	2.12

a. Base values of S_{cf} between data points in the tables above upon a straight line interpolation.

4. Shaft Deflection:
   a. Select pump shafts installed on volute-type pumps to provide sufficient stiffness to operate without distortion or damaging vibration throughout the range of service specified. Limit shaft deflection at the face (impeller side) of the shaft seal to no more than 2 mils at any operating condition within the zone described by the specified continuous-duty operating conditions. Calculate deflection at the shaft seal as required by provisions set forth in ANSI/HI 1.3.
5. Bearings:

Unless otherwise specified, select anti-friction bearings for pumps for a minimum L–10 life of 50,000 hours in accordance with ABMA 9 or 11. Ensure that anti-friction bearings for custom-engineered pumps have bearings selected for an L–10 life of 100,000 hours in accordance with ABMA 9 or 11. Select bearings for other elements in the rotating system such as motors, intermediate shaft bearings, and flywheel bearings using the same criteria as specified for the pump. Base bearing selection upon the worst combination of continuous-duty operating conditions specified and include both steady-state and transient loads. Provide calculations supporting the selection of bearing sizes as Product Data.

6. Bearing Isolators:
   a. Unless otherwise specified, fit pump and motor bearings with bearing isolators, specifically selected for the size and type of bearing. Provide bearing isolators that are the labyrinth, non-fretting type designed to expel contaminants by centrifugal force and prevent the escape of lubricants. Provide vapor-block capability. Ensure that the bearing seals are Inpro/Seal, or an approved equal.
7. Pump Shaft Seals:
   a. Unless otherwise specified in the detailed specification, pump shaft seals must be mechanical seals as specified in Section 43 05 11.

F. NPSH Margin Limitations:
   1. General:
      a. Select pumps furnished under this section and sections referencing this section for NPSH margin limitations using the criteria set forth in this section. Base NPSH3 characteristics for the candidate pump upon documented test data not more than 5 years old. Perform testing on a pump not more than two nominal pump diameters larger or smaller than the proposed pump with an impeller of the same geometry as that proposed for the pump to be used for the subject application and operating at either the same speed as the pump for the proposed application or a speed that provides plus or minus 10 percent of the impeller inlet velocity if reduced-speed testing is used. For very large pumps that cannot be accommodated in the manufacturer's test pit, the use of a model pump, sized in accordance with ANSI/HI 14.6, Appendix K, is acceptable. The Contractor shall document the basis for pump selection based upon NPSH margin limitations as set forth in this paragraph.
      b. The detailed specification sections provide NPSHA information for anticipated operating conditions for each application. This information is generally referenced to a specific elevation, stated in terms of project datum. The Contractor is responsible for requiring the pump manufacturer to adjust the NPSHA information in the specification section to the elevation of the pump impeller eye for the specific pump model and size proposed for the application. NPSH3, as used in the following paragraphs, means the NPSH3 at the impeller eye, determined in accordance with ANSI/HI 11.6 or 14.6, as applicable for the proposed pump. Have the Contractor require the pump manufacturer to document the method used to determine NPSH3 for the proposed pump and justifying compliance with the NPSH margin limitations established under this paragraph for each specified operating condition in material submitted under

paragraph 1.08. Include in the documentation justification of the NPSH3 tests used to develop NPSH3 characteristics, including the following:

1) Date, test procedure, and test logs of original NPSH3 information used to project requirements for the pump selected for the application
2) Test pump size, impeller diameter, impeller model, eye diameter, and speed
3) Calculations projecting NPSH3 test information to NPSH3 curve information for the pump proposed for the application
4) Calculations demonstrating compliance with the NPSH margin requirements established in this paragraph

c. the Contractor shall submit the manufacturer's margin calculations justifying the proposed pump selection with the material required under paragraph 1.08. The NPSH margin ratios specified in this paragraph are the minimum acceptable margin ratios. If the proposed pump requires greater margin ratios to operate within the specified operating conditions without loss of head due to cavitation, then it is the responsibility of the Contractor to bear costs associated with achieving the required margin ratio by lowering the elevation of the pump setting, lowering the elevation of the structure, or through other means. Subject any such adjustments to review and acceptance by the Engineer if necessary.

d. Individual restrictions are applicable to NPSH margin depending upon the type of pumping equipment and the fluid to be pumped as set forth in ANSI/HI 9.6.1, Table 9.6.1.4.5. Under no circumstances may the absolute value of the NPSH3 margin be less than 3.5 feet.

G. Electric Motors:

1. General:

a. Pumps must be electric-motor driven unless otherwise specified. Select all motors to be non-overloading at any operating point along the pump's full-speed operating curve, including points located beyond specified operating conditions. Ensure that all vertical motors are solid-shaft construction. Hollow-shaft motors will not be accepted. Ensure that motors furnished with pumps specified for operation at variable-speed inverter-duty types conform to the requirements of Section 43 05 21 and are compatible with the variable-speed equipment furnished with the pump.

b. Protect motor bearings with bearing isolators as specified in paragraph 1.04.

2. Motors for Custom-Engineered Pumps (Not Used):

3. Balance:

a. Ensure that motors rated 50 hp or greater and motors driving custom-engineered pumps are precision-balanced, conforming to a balance grade of G2.5 per International Organization for Standardization (ISO) 1940-1.

b. Have the Contractor provide certified balance logs attesting to achieving these requirements and submitted as required by paragraph 1.08. Have the chief engineer or person in charge of the test facility sign the balance logs.

1.05 ADDITIONAL DESIGN REQUIREMENTS – NOT USED.

1.06 QUALITY ASSURANCE: ALL PUMPS

A. Quality Certification:
   1. Ensure that all manufacturers and manufacturing sites proposed by the Contractor for supply of equipment furnished under this section and sections referencing this section hold current certification under ISO 9001. Application for certification under ISO 9001 is not deemed as an acceptable substitute for current certification. Provide documentation of the manufacturer's ISO 9001 certification and the manufacturer's written quality assurance/quality control (QA/QC) program.

B. Unit Responsibility:
   1. Have the Contractor assign unit responsibility to the pump manufacturer in conformance with the requirements of Section 43 05 11.

C. Performance Confirmation:
   1. Hydrostatic Tests:
      a. Subject all pressure-sustaining parts to factory hydrostatic tests. Unless otherwise specified, conform hydrostatic tests to the requirements of ANSI/HI 11.6 for submersible pumps and ANSI/HI 14.6 for dry pit pumps. Unless otherwise indicated in the detailed specifications, hold castings at the test pressure for the duration indicated in ANSI/HI 11.6 and 14.6. For process pumps designed in accordance with ANSI/API 610, hydrostatic testing must comply with the requirements of paragraph 8.3.2 of ANSI/ ANSI/API 610. Ensure that test results are certified correct by the chief engineer or individual in responsible charge of the manufacturing facility.
   2. Performance Guarantee:
      a. Unless specified otherwise in the detailed specification, have pump performance (flow and head, efficiency, and NPSH3) guaranteed by the pump manufacturer to the criteria specified under this paragraph.
      b. Ensure that equipment performance documentation, including test data, where tests are specified, includes sufficient test points (not less than eight) to document hydraulic performance along the complete head/capacity curve from shutoff to maximum capacity, and covers full-speed operating points specified in the detailed specification section referencing this section. Ensure that tests conducted at specified operating conditions are the inlet throttled to produce the NPSHA indicated for that specific condition in the detailed specification. Perform NPSH3 tests for not less than four full-speed operating conditions, but not less than specified operating conditions and at the best efficiency point (BEPQ).
      c. Conform test procedures to those set forth in ANSI/HI 14.6 acceptance grade 1U, and as specifically detailed in these specifications. However, any increase in flow or head permitted under acceptance grade 1U cannot result in overload (nameplate basis, S. F. = 1.0) of the specified motor power rating at any location on the pump's head/capacity curve. Conduct performance tests at the specified maximum speed. Affinity relationship-predicted test results will not be accepted. For column-type pumps, include in the performance documentation

curves showing both bowl efficiency and overall efficiency (including inlet, bowl, column, and discharge head losses) at maximum operating speed for the application.

d. Ensure that acceptance criteria for head and capacity test results, based upon the rated condition specified in the detailed specification, are as required in ANSI/HI 11.6 and 14.6, acceptance grade 1U, with the above-stated limitation with respect to motor power overload.

e. Ensure that acceptance criteria for NPSH3 at any specified operating condition are the values proposed by the Contractor in the curves submitted under paragraph 1.08, and duly accepted by the Engineer, with a tolerance of plus 0, minus unlimited, with the exception that Nss, as calculated for the specific pump, does not exceed the limitation established under paragraph 1.04B. If the NPSH3 data result in an increase in Nss, have the manufacturer confirm that the stable operating region for the pump corresponds to the POR as defined in ANSI/HI 9.6.3, and that the operating conditions specified to be within the POR are within the stable operating region for the pump. In addition, have the manufacturer identify the onset of suction recirculation and confirm that the onset of suction recirculation is outside of the specified operating range.

f. Include in the guarantee a statement to the effect that the pump will operate within the operating regions specified in the detailed specification. Put the guarantee in writing and have the chief engineer or individual in responsible charge of the test facility sign it. Under no circumstances should deviations from specified operating conditions result in overload of the driver furnished with the equipment, nor should such deviations result in power requirements greater than the driver's nameplate (1.0 service factor) rating.

3. Non-witnessed Tests:

a. Unless specified otherwise, performance-test pumps in accordance with ANSI/HI 14.6, Acceptance Grade 1U, with the above restrictions on motor power overload. Include in the factory tests test data for each full-speed performance requirement (Condition Points A and B specified in the detailed specification) and any other points stipulated for this test procedure in the detailed specification. Conduct these tests with the pump inlet throttled to provide the specified NPSHA.

b. Duplicate the test setup in the manufacturer's test facility as closely as possible to the inlet conditions in the proposed installation, using temporary baffles and other means, within the limitations of the test facility. Where centrifugal pumps are furnished with inlet elbows, inlet adapters or inlet reducers as a part of the manufacturer's scope of supply, test the pumps with the elbow, adapter, or reducer fitted to the pump and apply specified performance criteria to the complete pump assembly, including losses through any elbow, adapter, or reducer. Where submersible pumps are to be furnished with inlet nozzles and/or discharge elbows or adapters, test the pumps with these components fitted to the pumps. Apply the specified performance requirements to the complete pumping assembly including any inlet nozzles, and discharge elbows or adapters. Include in the certified test data separate readings for inlet and discharge head for each data point.

c. Take not less than eight test points, including not less than three within plus or minus 8 percent (in terms of rated flow) of the rated condition (Condition Point A) and not less than two test points within plus or minus 4 percent of the pump's BEP at the test speed. In addition, one test point is sufficient to define head and power requirements at shutoff head.

d. Perform NPSH3 tests in accordance with ANSI/HI 14.6, paragraph 14.6.5.8.2.1, Type 1 Test except that not less than four tests should be performed at the test motor speed to completely cover the range of operating conditions specified in the detailed specification. Ensure that one of the test points is at BEP flow to confirm the test pump's Nss. Ensure that translation of test results to specified operating conditions is in accordance with ANSI/HI 14.6, paragraph 14.6.6.1.1 so long as the exponent used can be supported by certified test data performed on a pump of the same type, size, speed, and specific speed as that of the proposed pump. Include NPSH3 tests at both the proposed and test speeds in test data justifying the exponent, test points at BEP, and at least three other points on the test pump head/capacity curve at least 15 percentage points removed from the BEP. Use the results of the NPSH3 tests to confirm the NPSH margins for each specified operating condition as specified in paragraph 1.04F. Perform NPSH3 tests for column type (axial, mixed-flow, and vertical-turbine) pumps using the open sump/water level or closed tank/tank pressure methods described in ANSI/HI 14.6, Table 14.6.5.8.2.1. Perform NPSH3 tests for submersible wastewater pumps using the method described in Figure 11.6.8 in ANSI/HI 11.6. Extend all NPSH3 tests from 50 percent to 140 percent of best efficiency flow at full speed, or to not less than 10 percent (in terms of flow) past the flow at Operating Condition B, whichever is greater. For a given pump, if the manufacturer can provide documentation that the upper flow limit of the AOR on the right side of the pump curve is less than 140 percent of best efficiency flow, the AOR may be used as the limit for the NPSH3 test. Cause for rejection is failure to achieve specified performance or performance proposed in accepted submittal documents (capacity and head, efficiency, or NPSH3), whichever is more restrictive. Acceptance tolerances are as set forth in paragraph 1.06C.2 Performance Confirmation; Performance guarantee.

e. Ensure that all test procedures are in strict conformance with the referenced standards. However, prediction of performance of a trimmed impeller from test data of the larger impeller will not be permitted. If trimming is required, re-test the pump. Do not allow deviations from specified operating conditions, though allowed by the referenced standards, to result in overload of the driver furnished with the equipment, nor allow such deviations to result in power requirements greater than the driver's nameplate (1.0 service factor) rating.

f. Have the Contractor furnish the Engineer with not less than 2 weeks' advance written notice of the date and place of the non-witnessed tests.

G. Have all test results, including test logs and generated curves, certified correct by the chief engineer or individual in responsible charge of the manufacturer's test facility, and submit in accordance with paragraph 1.08.

1.07 QUALITY ASSURANCE: ADDITIONAL REQUIREMENTS – NOT USED.

1.08 SUBMITTALS

A. Action Submittals:
   1. Procedures: Section 01 33 00.
   2. In addition to the material listed in the detailed specification, provide the following submittals:
      a. Documentation of successful pump designs or proposed alternatives as specified under paragraph 1.04B.1 Pump Selection. If included as part of the design, include in the documentation applications where pump cans of a similar size have been provided as part of the design.
      b. A Certificate of Unit Responsibility attesting that the Contractor has assigned unit responsibility in accordance with the requirements of this section and Section 43 05 11-1.02 Unit Responsibility. No other submittal material will be reviewed until the certificate has been received and found to be in conformance with these requirements.
      c. A copy of this specification section and the specification sections listed for submittal in the detailed specification sections. Ensure that the specification copies are complete with addendum updates included, with each paragraph check-marked to indicate specification compliance or marked to indicate requested deviations from specification requirements. Check-marks (□) denote full compliance with a paragraph as a whole. If deviations from the specifications are indicated and, therefore, requested by the Contractor, underline each deviation and denote by a number in the margin to the right of the identified paragraph. The remaining portions of the paragraph not underlined will signify compliance on the part of the Contractor with the specifications. Accompany the submittal with a detailed, written justification for each deviation. Failure to include a copy of the marked-up specification sections, along with justification(s) for any requested deviations to the specification requirements, with the submittal is sufficient cause for rejection of the entire submittal with no further consideration.
      d. A copy of the contract document control diagrams and process and instrumentation diagrams (P&IDs) relating to the submitted equipment, with addendum updates that apply to the equipment in this section, marked to show specific changes necessary for the equipment proposed in the submittal. If no changes are required, mark the drawing or drawings as “no changes required.” Failure to include copies of the relevant drawings with the submittal is cause for rejection of the entire submittal with no further review.
      e. Documentation of certification in accordance with ISO 9001 as specified under paragraph 1.06A.
      f. Predicted pump performance curves for each condition point specified showing head, power, efficiency, and NPSH3 on the ordinate plotted against capacity (in million gallons per day [mgd]) on the abscissa, along with the Contractor’s warranty to meet the requirements specified in paragraph 1.07 Scope. Provide curves for variable-speed pumps to demonstrate operation at speeds required to achieve the specified reduced-speed operating conditions. Ensure that all curves clearly display the specified operating conditions and conformance with

POR and AOR limits in the individual specification sections. Provide variable-speed plots showing specified operating conditions and POR limits. Plot curves at increments of not more than 5 percent speed or 50 rpm increments, whichever is less, from full speed to the lowest speed required to meet specified operating conditions. Ensure that curves for column-type pumps show bowl efficiency and allowances for inlet, column, and discharge head losses separately.

g. NPSH margin calculations performed for each specified operating condition in accordance with paragraph 1.04 as applicable and including the information required under paragraph 1.04F.

h. Motor submittal information as specified in Section 43 05 21. In addition, include in this information certified calculations for motor rotor and frame reed frequencies, as specified under paragraph 1.04G.

i. Complete description and sketch of proposed test setup for factory test if a factory test has been required under the detailed specification section or as required by the provisions of this section. Include in submittal material sample calculations and proposed test log format. If the Contractor proposes a model test for a part or all of the specified performance tests, include in the submittal information the proposed model details and a complete description of the proposed method for comparing the model impeller profiles with the impeller profiles for the prototype pumps.

j. Drawings showing general dimensions and confirming the size of pumps, motors, drives, and specified appurtenances; piping connections; construction details of equipment (including bearings and bearing isolators); wiring diagrams; and weight of equipment.

k. Variable-speed drive information as required under Section 26 24 19 if the equipment specified includes variable-speed capability.

l. Not used.

m. Not used.

n. Detail drawings of the pump and driver unit foundation demonstrating conformance to this section and Section 43 05 13. Include in the submittal drawings depicting type, size, number, projection, and arrangement of anchor bolts; dimensional drawings of the sole and baseplates; and dimensional drawings for the concrete supports for both the pump and motor, if applicable. Ensure that drawings also depict other pertinent information, including location of equipment pads and reinforcement; equipment drains; expansion joint locations; elevation of top of grout and grout thickness; elevation of top of baseplate, soleplate, or mounting block; size and location of electrical conduits; and any other equipment-mounting features embedded in equipment pads.

o. Limiting nozzle loading criteria, if different from that established by ANSI/HI 9.6.2.

p. The qualifications of the independent testing laboratory and individual personnel proposed by the Contractor to perform field vibration testing, analysis, and reporting in accordance with the requirements of paragraph 3.06.

q. The qualifications of the personnel proposed by the Contractor to perform field alignment procedures in accordance with the requirements of paragraph 3.04.

B. Information Submittals:
   1. Procedures: Section 01 33 00:
      a. Performance guarantee as specified in paragraph 1.06C.
      b. Equipment anchor calculations specified in paragraph 1.04E.
      c. O&M information specified in Section 01 78 23.
      d. Motor product data as specified in Section 43 05 21.
      e. Bearing L-10 life calculations.
      f. Nozzle loading information required under paragraph 3.01.
      g. Motor balance logs, certified and notarized as specified in paragraph 1.04G.
      h. Certified balance logs and worksheets, as specified in paragraph 2.05.
      i. Installation certification Section 43 05 11-Form A as specified in paragraph 3.01.
      j. Training certification Section 43 05 11-Form B as specified in paragraph 3.08.
      k. If factory tests are specified in the detail specification section, certification of satisfactory testing of each unit as specified. Include in the certified material copies of test logs and resulting performance curves.
      l. Documentation of field alignment data in accordance with Section 43 05 14.
      m. Field vibration test reports in accordance with paragraph 3.06.

PART 2 PRODUCTS

2.01 MATERIALS

A. General:
   1. Where this section and sections referencing this section are silent with respect to materials of construction on any component, have material selection follow the requirements of Table H.1, ANSI/API 610, Materials Class I-1, with the exception that shafts for vertical column-type pumps be 12 percent chromium stainless steel. Materials specified are considered the minimum acceptable for the purposes of durability, strength, and resistance to erosion and corrosion. The Contractor may propose alternative materials for the purpose of providing greater strength or to meet required stress limitations. However, alternative materials must provide at least the same qualities as those specified for the purpose.

B. Pumps:
   1. Finish for surfaces in contact with pumped fluid:
      a. Conform all pump components in contact with the pumped fluid to the following requirements.
      b. Indicate surfaces to be machine-finished on the shop drawings by symbols that conform to ASME B46.1, Surface Texture, Surface Roughness, Waviness, and Lay. Ensure that machine surfaces are finished to at least the following tolerances:

c. Nominal roughness:

Surface	Grade, Ref: ASME B46.1 (SI units microns) (Ra: micro inches)
General machine work	3.2 or better (125 Ra)
Flange faces	3.2 or better (125 Ra)
Journal surfaces at sleeve bearings	0.4 or better (16 Ra)
Hydraulic surfaces	
Impeller	4.5 or better (177 Ra)
Impeller bowl and diffuser	6.3 or better (250 Ra)
All other wetted surfaces	6.3 or better (250 Ra)

d. Flaws such as scratches, ridges, holes, peaks, cracks, or checks that will make the part unsuitable will be cause for rejection. Ensure that machine-finished surfaces are thoroughly cleaned and coated with a protective layer of rust preventive. Oil and wrap small pieces, unassembled pipe, or finished bolts with moisture-resistant paper.

2. Materials:
   a. Unless otherwise specified, ensure that wetted cast-iron parts for pumps for solids-bearing liquid services have 2 to 3 percent nickel added to the cast iron.
   b. Provide stainless-steel impellers for the first stage of custom-engineered pumps and elsewhere when specified. Ensure that stainless-steel impellers are ASTM A743, Grade CA6NM. Where cast-nickel aluminum bronze impellers are specified, ensure that the materials conform to ASTM B148, Alloy C95500.
   c. Ensure that materials for shaft sleeves for packed boxes, fretting seals, and interstage seals conform to ANSI/API 610, Annex H 12 percent chromium-hardened or hard-faced 316 austenitic stainless steel. Ensure that materials for seal glands for packed boxes and shaft sleeves are AISI 316 stainless steel. Ensure that fastener parts of all types in wetted areas conform to ANSI/API 610, Materials Class S-5 requirements. Regardless of the seal construction, adequately size seal chambers to accommodate specified mechanical seals.

2.02 GENERAL QUALITY

A. Ensure that details of manufacture and assembly of equipment furnished under this section and referencing sections follow the requirements of ANSI/API 610 with respect to the following features (paragraph references, ANSI/API 610):
   1. Alignment aids (paragraph 6.1.24)
   2. Removal of rotating element (paragraph 6.1.25)
   3. Jackscrews for assistance in alignment on baseplates and equipment supports (paragraph 9.3.8.3.2)
   4. Castings (paragraph 6.12.2)

B. Provide all components or subassemblies weighing 50 pounds or more with at least one lifting eye or a provision for threading in a lifting eye. Provide components 250 pounds or greater with lifting eyes or provisions for at least two lifting eyes. Provide

components 1,000 pounds or greater with at least three lifting eyes or provisions for inserting lifting eyes.

2.03 BASEPLATES AND SOLEPLATES

A. Unless otherwise noted in the detailed specification, have the pump manufacturer furnish pumps with baseplates or soleplates conforming to the requirements of Section 43 05 13. Design baseplates and soleplates to be installed in the housekeeping curb shown and ensure that they are machined flat and co-planar to within 0.002 inch per foot in all directions on the face mating with the pump and motor or driver support. Ensure that soleplates have the words “THIS SIDE DOWN” permanently affixed to the underside using a welding rod material or stamped prior to milling. Alternative marking methods, using heavy scribing or machining, are acceptable provided that they may be observed following blasting in preparation for coating.

2.04 WEARING RINGS

A. Where specified, fit pumps with both stationary and rotating wearing rings. Except for the difference in hardness between stationary and rotating rings, ensure that wearing rings are stainless steel and conform to the requirements of ANSI/API 610, paragraph 6.7 and material class S-8 (Table H.1, Annex H). Ensure that maximum wearing ring clearances do not exceed 150 percent of the values stated in Table 6, ANSI/API 610. Ensure that minimum wearing ring hardness on the rotating ring is 350 Brinell Hardness Number (BHN), with the stationary ring not less than 100 hardness points greater.

2.05 BALANCE

A. Ensure that balancing for pumps with suction nozzle sizes 6 inches in diameter and greater and associated components conform to the requirements set forth in ANSI/API 610, paragraph 6.9.4.1 (equivalent to ISO 1940 or ANSI 2.19 Grade 2.5), unless other portions of this project manual impose more restrictive requirements. It is the intent that the components be balanced as an assembly (“rotor”) in accordance with ANSI/API 610 definitions. For extended-shaft pumps, balance impeller(s) and shaft up to the first coupling with the line-shaft.

B. For separately balanced components, perform a residual unbalance inspection after rotor assembly per ANSI/API 610 requirements, as described in Annex J of that document. Provide copies of worksheets and demonstrate that tolerances are in compliance (i.e., rotor has passed) in addition to other reporting requirements of this paragraph.

C. Furnish all balance logs, certified correct and signed by the chief engineer or individual in responsible charge of the manufacturing facility, in accordance with paragraph 1.08.

2.06 DRIVE UNIT SUPPORTS FOR SEPARATELY SUPPORTED MACHINES AND INTERMEDIATE SHAFT SUPPORTS – NOT USED.

2.07 FLYWHEEL ASSEMBLIES – NOT USED

2.08 CANS FOR COLUMN-TYPE PUMPS – NOT USED

2.09 MACHINING

A. Unless otherwise specified, provide machined surfaces with a 125 Ra (micro-inch) finish without any grooves, surface imperfections, or machining marks. Ensure that mating surfaces are coplanar within a maximum of 0.002 inch. Ensure that bearing housings and seals have collinear centerlines within less than 0.001 inch total difference. Provide shafts with a 63 Ra (1.6-micron) finish at fit areas (coupling, sleeves, impeller) and 125 Ra (3.2-micron) finish at the clear spans.

PART 3 EXECUTION

3.01 GENERAL

A. With the exception of submersible pumps and the inlet connection for column-type pumps installed in open forebays or wetwells, connect pump inlet and discharge nozzles to field piping using equipment connection fittings conforming to the requirements of Section 40 05 06.16. Select restraining rods on equipment connection fittings that is designed specifically to restrain the unbalanced hydraulic thrust developed by the pump when operating at full speed against a closed valve. Torque all restraining rod nuts to ensure that any moment or shear transmitted to the pump nozzles is within the values permitted under ANSI/HI 9.6.2, or that permitted by the equipment manufacturer, whichever is greatest. Where ANSI/HI 9.6.2 is silent with respect to any particular aspect of allowable nozzle loads, have the Contractor follow the written requirements provided by the equipment manufacturer. Install all pumps furnished under specification sections containing the words “custom-engineered” in the title under the presence of a factory-authorized installation specialist or specialists. Ensure that under no circumstances does any installation procedure take place without the installation specialists present. Ensure that equipment installation procedures conform to the requirements of Section 43 05 13. Upon completion of installation work, have the Contractor submit a complete, properly signed certification Form 43 05 11-A as specified in Section 01 99 99.

3.02 SOLEPLATES

A. Level soleplates, if provided pursuant to this section or any section referencing this section, or where required by the equipment manufacturer’s recommendation, in the presence of a factory-authorized installation specialist to a maximum tolerance of 0.002 inch per foot in all directions. Where the equipment manufacturer requires more stringent tolerances, those tolerances prevail.

3.03 PUMP CANS – NOT USED

3.04 ALIGNMENT

A. Ensure that journeymen millwrights perform alignment of equipment furnished under this section and any referencing section. Carpenters, laborers, or any other trades are specifically excluded from performing this work. In locations where such trades are not available, have the Design-Builder retain the services of a firm specializing in this type

of work to perform the setting and alignment work. Have the Subcontractor submit the qualifications of the proposed firm to the Engineer for acceptance prior to performing the work. Ensure that the Engineer personally witnesses final alignment procedures for each item of equipment as a condition precedent to beginning any work required under Division 01. Ensure that alignment techniques conform to the requirements of Section 43 05 14.

3.05 FIELD TESTING

A. Unless otherwise specified in the detailed specifications, field-test centrifugal pumps for lateral vibration in accordance with paragraph 3.06.

3.06 FIELD VIBRATION TESTS

A. Vibration Tests:
   1. Conduct filed vibration tests on all pumps with a calibrated instrument.
   2. Ensure that the RMS vibration velocity does not exceed the limits established in ISO 10816-3 for electric motors (Table A.1 or A.2, Zone Boundary B/C, with flexible or rigid support) Ensure that measurement locations correspond to guidelines provided in the specific ISO 10816 section for the machine being evaluated (motor, pump, or other component). When operating at any combination of conditions outside the POR for any pump, regardless of type, ensure that limiting values are 30 percent greater than the above limits, as indicated in the following table.

Pumping System Component Vibration Limits

Component	Standard	Applicable range	Notes	Inside POR (in./sec-RMS)	Outside POR (in./sec-RMS)
Motors	ISO 10816-3 Table A.2	15 kilowatts (kW) to 300 kW >300 kW	Rigid base*	0.110 0.177	
Pumps (2 or more vanes)	ISO 10816-7 Table A.1	≤268 hp >268 hp		0.201 0.240	0.261 0.312
Single vane pumps	ISO 10816-7 Table A.1	≤268 hp >268 hp	Increase 2 or more vane values by 50%	0.302 0.360	0.392 0.468

*Rigid or flexible base determined by analysis using ANSI/HI 9.6.8 methodology.

   3. Provide vibration test reports as an information submittal in accordance with paragraph 1.08, and provide the signature of the responsible professional vibration analysis specialist. Ensure that the vibration spectra is of sufficient resolution for legibility of magnitude and frequency data to be properly reviewed by the Engineer. Cascade diagrams are not sufficient for variable-speed drive application unless supported by the required data in a format suitable for more detailed analyses. Provide separate spectra at the maximum and minimum operating speeds and any potential resonant frequencies.

3.07 FIELD TORSIONAL VIBRATION TESTING – NOT USED.

3.08 TRAINING

A. Ensure that training conforms to the requirements of Section 01 91 14 and includes separate training sessions for each operator shift maintained by the City and a separate session for maintenance personnel. Unless otherwise specified in the referencing section, the training requirement is waived for constant-speed pumping equipment with suction nozzle sizes 6 inches in diameter and smaller and for pumps with connected power requirements 10 hp and less. Ensure that the training session for maintenance personnel includes a comprehensive presentation, employing cut-away models or comparable graphics, and documentation on the step-by-step disassembly and subsequent reassembly of a pumping unit. Upon completion of training requirements, ensure that the Contractor submits certified Form 43 05 11-B as specified in Section 01 99 99.

END OF SECTION

THIS PAGE INTENTIONALLY LEFT BLANK

SECTION 43 23 11

VERTICAL INLINE MULTISTAGE CENTRIFUGAL PUMPS

PART 1 GENERAL

1.01 SUMMARY

A. This section includes:
   1. Vertical inline multistage constant-speed centrifugal pumps for reverse osmosis (RO) permeate.
   2. Pumping unit(s) consisting of a pump, electric motor, and coupling installed on a common base.
   3. Equipment furnished to conform to the requirements of this section and to the requirements in Section 43 23 03 as applicable.

B. Equipment List

Item	Equipment Number
ROP Carrier Water Pump 1	P-1210
ROP Carrier Water Pump 2	P-1220
ROP Carrier Water Pump 3	P-1230

1.02 RELATED SECTIONS

A. This section contains specific references to the following related sections; additional related sections may apply that are not specifically listed below:
   1. Section 43 05 11: General Requirements for Equipment
   2. Section 43 05 21: Common Motor Requirements for Equipment

1.03 REFERENCES

A. This section contains references to the following documents. These references are a part of this section as specified and modified. Where a referenced document contains references to other standards, those documents are included as references under this section as if referenced directly. In the event of conflict between the requirements of this section and those of the listed documents, the requirements of this section shall prevail.

1.04 ADMINISTRATIVE REQUIREMENTS

A. Unit Responsibility
   1. The Contractor shall assign unit responsibility as specified in Section 43 05 11 to the Subcontractor for the pumps and motors as specified in this section and Section 43 05 21.
   2. Provide a completed, signed, and notarized Certificate of Unit Responsibility.

1.05 SUBMITTALS

A. Action Submittals:
   1. Procedures: Section 01 33 00.

B. Informational Submittals:
   1. Procedures: Section 01 33 00.

C. Closeout Submittals:
   1. Procedures: Section 01 78 23.
   2. Spare parts (for each size of pump):
      a. Procedures: Section 01 33 00
      b. One impeller lock screw set
      c. One set of pump bearings
      d. One set of wear rings
      e. One shaft seal, complete
      f. Tag and store spare parts in accordance with provisions of Section 43 05 11

1.06 DELIVERY, STORAGE, AND HANDLING

A. Comply with procedures described in Section 01 61 00.

B. Block shaft and prevent damage to bearings during shipment

PART 2 PRODUCTS

2.01 MANUFACTURERS

A. The following candidate manufacturers are capable of producing equipment and/or products that will satisfy the requirements of this section. The manufacturers' standard product may require modification to conform to specified requirements:

Item	**Value**		
Equipment Number	P-1210	P-1220	P-1230
Pump Name	ROP Carrier Water Pump 1	ROP Carrier Water Pump 2	ROP Carrier Water Pump 3
Manufacturer	Grundfos CR Or approved equal	Grundfos CR Or approved equal	Grundfos CR Or approved equal

2.02 TYPE

A. Vertical, in-line, multi-stage pumps with vertical motor installation.

2.03 PERFORMANCE/DESIGN CRITERIA

A. General

1. The pump shall be designed to pump the fluid type specified in 2.03.B. The pump shall operate without clogging or fouling caused by material in the pumped fluid at any operating condition within the range of service specified.
2. The pump shall be designed to operate without cavitation, and the motor and pump combination shall operate without vibration over the specified range of conditions. The pump head capacity curve shall slope in one continuous curve with no point of reverse slope inflection.
3. All components shall be designed to safely withstand forces resulting from flow reversals up to 125 percent of maximum speed within the pump during shutdowns caused by power failure.
4. The complete pumping unit shall be designed to operate without overload on any component at any point along the pump's entire operating curve.

B. Service Conditions:

Description	**Value**		
Equipment number	P-1210	P-1220	P-1230
Area exposure		Outdoor dry under canopy	Outdoor dry under canopy
Fluid type	Reverse osmosis permeate, no solids; pH 5-7	Reverse osmosis permeate, no solids; pH 5-7	Reverse osmosis permeate, no solids; pH 5-7
Fluid temperature	50 to 90 Deg. F	50 to 90 Deg. F	50 to 90 Deg. F

C. Operating Conditions:

Operating Condition	**Value**		
Equipment number	P-1210	P-1220	P-1230
Pump	ROP Carrier Water Pump 1	ROP Carrier Water Pump 2	ROP Carrier Water Pump 3
Condition A [a,d] (Guaranteed Head Condition):			
Capacity, gpm	1	1	1
Total Head, feet	51	42	47
NPSHA (min), feet	34	34	34
Condition B [b,d] (Minimum Head Condition):			
Capacity, gpm	From Flow Vs Curve (TBD by pump manufacturer)		
Total Head, feet	50	41	46
NPSHA (min), feet	34	34	34
Condition C [b,d] (Maximum Head Condition):			
Capacity, gpm	From Flow Vs Curve (TBD by pump manufacturer)		

Operating Condition	Value		
Equipment number	P-1210	P-1220	P-1230
Total Head, feet	52	42	48
NPSHA (min), feet	34	34	34

Notes:

a. Condition A shall be taken as the rated, continuous-duty operating condition. Performance at the rated condition shall be guaranteed in accordance with Section 43 23 03. Condition A has been selected to obtain the rated pumping capacity for the installation. It is not intended that the pumps be selected for maximum efficiency at Condition A. Pumps furnished under this section shall be selected to achieve Condition A performance, and shall operate continuously without objectionable vibration or cavitation at the head specified under Condition B. Condition A may be located in the Preferred Operating Region as established by the pump manufacturer in accordance with ANSI/HI 9.6.3 and published in the manufacturer's published application data for the specific model proposed for this application.

b. Condition B head is presented to indicate operating conditions when pump is operating against minimum anticipated system head, assuming a hypothetical head-capacity curve. Condition B shall be used for pump selection. Condition B shall be located within the Preferred Operating Region as established by the pump manufacturer in accordance with ANSI/HI 9.6.3 and listed in the manufacturer's published application data for the specific model proposed for this application. Condition B shall be located to the right of BEPQ and shall be not less than 20 percent of BEPQ. Pumps with head-capacity curves steeper than that assumed will produce somewhat less flow at somewhat lower head. The reverse will occur with pumps having a shallower head-capacity curve.

c. Condition C is the anticipated continuous duty maximum head condition. Pumps furnished under this specification shall be capable of sustained (24 hours per day) operation at this condition within the requirements set forth in Section 43 23 03. Condition C shall be located within the Preferred Operating Region as established by the pump manufacturer in accordance with ANSI/HI 9.6.3 and listed in the manufacturer's published application data for the specific model proposed for this application.

d. Total head in the above tabulation is the algebraic difference between the discharge head and suction head as defined in ANSI/HI 1.1 – 1.6. NPSHA in the above tabulation refers to the pump inlet piping at centerline elevation as shown and is calculated in accordance with ANSI/HI 1.3 for average barometric pressure and maximum temperature conditions. NPSHA at the pump impeller eye can be determined by adjusting the given value by proposed pump dimensions and the indicated requirements for pump installation details. An allowance of five feet has been included for the presence of volatile constituents in the pumped fluid. Required NPSHA margin shall be as specified in Section 43 23 03.

D. Design Requirements:

1. Conform equipment provided under this Section to the following:

Item	Value		
Equipment number	P-1210	P-1220	P-1230
Pump	ROP Carrier Water Pump 1	ROP Carrier Water Pump 2	ROP Carrier Water Pump 3
Minimum efficiency at best efficiency point (BEP) at maximum speed, percent	54	54	54
Piping connection size, inches, minimum			
Pump inlet	1.25	1.25	1.25

Item	Value		
Equipment number	P-1210	P-1220	P-1230
Pump discharge	1.25	1.25	1.25
Nominal operating speed, rpm, maximum	3490	3490	3490
Operating speed, constant or variable	Constant	Constant	Constant
Motor (see Section 43 05 21)			
Horsepower	0.25	0.25	0.25
Type (see Section 43 05 21)	TEFC	TEFC	TEFC
Inverter duty	Yes	Yes	Yes
Space heater	No	No	No
Thermal protection	Yes	Yes	Yes
Ambient duty rating	+40 C	+40 C	+40 C
Voltage rating	115/230 volt, 60-hz, 1 Phase	115/230 volt, 60-hz, 1 Phase	115/230 volt, 60-hz, 1 Phase
Hazardous are classification	None	None	None
Reversing motor	No	No	No
Multispeed motor	No	No	No
Motor starting type	Across the Line	Across the Line	Across the Line
Flanges	ASME Class 250	ASME Class 250	ASME Class 250

2.04 SYSTEM OPERATION

A. P-1210, P-1220, and P-1230: ROP Carrier Water Pumps 1, 2, and 3 will be installed in an outdoor location and transfer RO permeate from the PFC Carrier Water Tank to the MBR filtrate, Murray MF Feed, and San Vicente RO feed, respectively. Each pump will operate continuously at a fixed speed to maintain pump discharge flow setpoints and will run as long as the PFC Carrier Water Tank level is above a low setpoint.

2.05 CONSTRUCTION AND MATERIALS

A. Materials specified are considered the minimum acceptable for the purposes of durability, strength, and resistance to erosion and corrosion. The Subcontractor may propose alternative materials to provide greater strength or meet required stress limitations. However, alternative materials must provide at least the same qualities as those specified for the purpose.

B. The head-capacity curve shall have a steady rise in head from maximum to minimum flow within the preferred operating region. The shut-off head shall be a minimum of 20% higher than the head at the best efficiency point.

C. All pump bearings shall be lubricated by the pumped liquid.

D. Pump shall have the following features:
   1. Each pump shall be designed for in-line installation requiring no more than 1.5 square feet of floor space (including motor).
   2. The pump impellers shall be secured directly to the pump shaft by means of a splined shaft arrangement.
   3. The suction/discharge base shall have ASME (Class 150), internal thread (NPT) or grooved pipe (Victaulic Type) connections as indicated on the plans or pump schedule. ASME flanged bases shall be a slip ring (rotating flange) design.

E. Pump Construction:

Component	Material
Equipment Number	P-1210, P-1220, P-1230
Suction/discharge base, pump head	Cast Stainless Steel (ASTM CF-8M)
Base plate, shaft couplings, flange rings	Cast iron (ASTM Class 30) or Stainless Steel (ASTM CF-8M)
Shaft	316 or 329 Stainless Steel
Motor Stool	Cast iron (ASTM Class 30)
Impellers, diffuser chambers, outer sleeve	316 Stainless Steel
Impeller wear rings	316 Stainless Steel
Shaft journals and chamber bearings	Silicon Carbide
O-rings	EPDM

F. The shaft seal shall be a balanced O-ring cartridge type with the following construction:
   1. Collar, Drivers, Spring: 316 Stainless Steel
   2. Shaft Sleeve, Gland Plate: 316 Stainless Steel
   3. Stationary Ring: Silicon Carbon
   4. Rotating Ring: Silicon Carbide
   5. O-rings: EPDM

G. Shaft seal replacement shall be possible without removal of any pump components other than the seal cover, motor, motor couplings and coupling guard.

H. The maximum working temperature shall be 250 degrees F.

2.06 MOTOR

A. Conform to the requirements of paragraph 2.03 Design Requirements, Section 43 23 03, and Section 43 05 21.

2.07 SOURCE QUALITY CONTROL

A. Hydrostatic Tests
   1. Factory test all pressure sustaining parts in accordance with Section 43 23 03.

B. Performance Tests
   1. Factory performance and net positive suction head (NPSH) tests will not be required. However, the manufacturer must be prepared to guarantee the performance specified under paragraph 2.03.

C. Motor tests:
   1. Subject all motor circuits to electrical resistance tests to confirm functionality

PART 3 EXECUTION

3.01 EQUIPMENT MOUNTING

A. Install per manufacturer recommendations.

3.02 ALIGNMENT

A. Procedures: Per manufacturers recommendations.

3.03 SYSTEMS STARTUP

A. Comply with procedures described in Section 01 91 14.

B. Preoperational (factory) testing: See paragraphs 1.07 and 2.07.

C. System testing
   1. Monitor vibration and if vibration testing reveals that operation is impaired by poor operation of ancillary equipment (sticking check valves, plugged air/vacuum reliefs, improperly torqued flanges, etc.), repair ancillaries and retest pumps if directed by the Owner.

      After Engineer review of the reports of vibration testing, participate in making any required adjustments to the pumping control strategy to avoid damaging vibrations, protect the pumps, and meet performance requirements.

END OF SECTION

THIS PAGE INTENTIONALLY LEFT BLANK

SECTION 43 23 56.11
SELF-PRIMING NON-CLOG CENTRIFUGAL PUMPS

PART 1 GENERAL

1.01 SUMMARY

A. Section includes:
1. Self-priming, non-clog, centrifugal pumps, suitable for pumping liquids containing solids.
2. Pumping unit(s) consists of a pump, drive unit, base, and all appurtenances to provide a complete pumping system.
3. Equipment furnished under this section is not required to meet the additional pumping requirements of Section 43 23 03, except where specified in this section.
4. The pumps will be used for pumping primary influent and primary effluent to the Blend Mixing Tank.

B. Equipment list:

Item	Equipment Number
Primary Influent Pump	P-310
Primary Effluent Pump	P-320

1.02 RELATED SECTIONS

A. This section contains specific references to the following related sections. Additional related sections may apply that are not specifically listed below:
1. All applicable Division 1 specifications.
2. Section 09 90 00: Protective Coating
3. Section 43 05 11: General Requirements for Equipment
4. Section 43 05 13: Rigid Equipment Mounts
5. Section 43 05 21: Common Motor Requirements for Equipment
6. Section 43 23 03: General Requirements for Centrifugal Pumps

1.03 REFERENCES

A. This section contains references to the following documents. They are a part of this section as specified and modified. Where a referenced document contains references to other standards, those documents are included as references under this section as if referenced directly. In the event of conflict between the requirements of this section and those of the listed documents, the requirements of this section shall prevail.

Reference	Title
ASTM A48	Gray Iron Castings
ASTM A276	Stainless Steel Bars and Shapes

Reference	Title
ASTM A536	Ductile Iron Castings

1.04 DEFINITIONS

A. Terminology used in this section conforms to the following definitions:
   1. Equipment Pad: Concrete foundation (block or slab) supporting and elevating equipment mounts above the supporting structural floor slab or local grade.
   2. Mounting Pads: Thickened or raised areas of baseplates and soleplates where the feet or mounting surfaces of mounted equipment and drivers rest on the baseplate or soleplate.

1.05 ADMINISTRATIVE REQUIREMENTS

A. Unit responsibility: Assign unit responsibility, as specified in Section 43 05 11, to the self-priming non-clog centrifugal pumps manufacturer for the pumps and motors specified in this section and Section 43 05 21. Provide a completed and signed Unit Responsibility Certification Form (Form 43 05 11-C,).

1.06 SUBMITTALS

A. Action submittals:
   1. Procedures: Section 01 33 00.
   2. A copy of this specification section, and those listed below with addendum updates included, with each paragraph check-marked to indicate specification compliance or marked to indicate requested deviations from specification requirements:
      a. Section 43 05 11: General Requirements for Equipment
      b. Section 43 05 13: Rigid Equipment Mounts
      c. Section 43 05 21: Common Motor Requirements for Equipment
   3. Use check-marks (ü) to denote full compliance with a paragraph as a whole. Underline and denote deviations by a number in the margin to the right of the identified paragraph. The remaining portions of the paragraph not underlined will signify compliance on the part of the Subcontractor with the specifications. Include a detailed, written justification for each deviation. Failure to include a copy of the marked-up specification sections, along with justification(s) for any requested deviations to the specification requirements, with the submittal shall be sufficient cause for rejection of the entire submittal with no further consideration.
   4. Completed Certificate of Unit Responsibility attesting that the Contractor has assigned, and that the manufacturer accepts unit responsibility in accordance with the requirements of this section and Section 43 05 11-1.02. No other submittal material will be reviewed until the certificate has been received and found to be in conformance with these requirements.
   5. A copy of the contract document control diagrams and process and instrumentation diagrams relating to the submitted equipment, with addendum updates that apply to the equipment in this section, marked to show specific changes necessary for the equipment proposed in the submittal. If no changes are required, mark the drawing or drawings "no changes required." Failure to include

copies of the relevant drawings with the submittal shall be cause for rejection of the entire submittal with no further review.

6. Motor Data Sheets specified in Section 43 05 21.
7. Performance curves developed for specified operating conditions showing relationship between flow, head, efficiency, horsepower (HP), and NPSH3 information over the manufacturer's recommended range of operation.
8. NPSH margin calculations performed for each specified operating condition in accordance with this section.
9. Drawings showing general dimensions and confirming the size of pumps, motors, drives and specified appurtenances; piping connections; construction details of equipment (including bearings and bearing isolators); wiring diagrams; and weight of equipment.

B. Informational submittals:
1. Procedures: Sections 01 33 00, 01 77 00, and 01 78 23.
2. Motor informational submittals (product data) as specified in Section 43 05 21.
3. Electric motor manufacturer's standard overhaul instruction for motors 5 HP and larger.
4. Current mill certificates or test reports confirming hardness of casings, suction pieces, impellers, wear plates, radial wear elements, and shaft sleeves being supplied on job.
5. Installation Certification Section 43 05 11-Form A as specified in paragraph 3.01.
6. Training Certification Section 43 05 11-Form B as specified in paragraph 3.02.
7. Field test results as specified in paragraph 3.03.

C. Closeout submittals:
1. Procedures: Section 01 77 00.
2. Operating and maintenance submittals: Section 01 78 23.

D. Spare parts:
a. Procedures: Section 01 33 00.
b. Provide the following spare parts:
1) One complete pump/motor assembly
2) One mechanical seal, complete
3) Two sets of all gaskets
4) One shaft sleeve
5) One wear plate
6) One set of pump bearings
7) Additional parts as recommended by the manufacturer

1.07 QUALITY ASSURANCE

A. Certifications:

1. Manufacturers proposing to furnish equipment specified under this section shall hold current certification under ISO 9001.
2. Application for certification under ISO 9001 shall not be deemed as an acceptable substitute for current certification. Documentation attesting to current certification shall be signed by an officer of the company.

1.08 DELIVERY, STORAGE, AND HANDLING

A. Procedures: Section 01 61 00.

PART 2 PRODUCTS

2.01 MANUFACTURERS

A. Candidate manufacturers are listed below. The manufacturer's standard product may require modification to conform to specified requirements:
   1. Gorman-Rupp
   2. Cornell
   3. Or approved equal

2.02 TYPE

A. Self-priming, constant speed, non-clog centrifugal type with horizontal suction and vertical discharge mounted on a common base and belt driven by an electric motor.

B. Pump designed so impeller, back head, frame, and pump shaft can be removed as a complete unit without disturbing the connecting piping, casing, or motor.

2.03 PERFORMANCE/DESIGN CRITERIA

A. Service conditions:

Description	Value
Equipment number	P-310, P-320
Area exposure	Outdoor
Fluid type	Wastewater from primary effluent of a wastewater treatment plant containing up to 790 mg per liter of solids consisting of organic and inorganic materials, rocks, grit, petroleum products, fats, oils, and grease
Fluid temperature	25 to 35 degrees C

B. Operating conditions:
   1. Full Speed Operating Conditions:

Operating condition	Value	
Equipment number	P-310	P-320
Suction lift, maximum, feet	4	7
Condition A [a,d] (Guaranteed Performance):		
Capacity, gpm	80	208
Total head, feet	95	90
Suction lift, feet	4	7
NPSHA, feet	27.73	24.28
Condition B [b,d] (Minimum Operating Head):		
Capacity, gpm	From pump H/Q curve	From pump H/Q curve
Total head, feet	66	75
NPSHA, feet	27.73	24.28
Condition C [c,d] (Maximum Operating Head):		
Capacity, gpm	From pump H/Q curve	From pump H/Q curve
Total head, feet	97	100
NPSHA, feet	27.84	23

Notes:

a. Take Condition A as the rated, continuous-duty operating condition. Guarantee performance at the rated condition in accordance with Section 43 23 03. Condition A has been selected to obtain the rated pumping capacity for the installation. It is not intended that the pumps be selected for maximum efficiency at Condition A. Select pumps furnished under this section to achieve Condition A performance, and also operate continuously without objectionable vibration or cavitation at the head specified under Condition B. Locate Condition A in the Allowable Operating Region as established by the pump manufacturer in accordance with ANSI/HI 9.6.3 and publish in the manufacturer's published application data for the specific model proposed for this application.

b. Condition B head is presented to indicate operating conditions when the pump is operating against minimum anticipated system head, assuming a hypothetical head-capacity curve. Use Condition B for pump selection. Condition B shall be located within the Preferred Operating Region as established by the pump manufacturer in accordance with ANSI/HI 9.6.3 and list in the manufacturer's published application data for the specific model proposed for this application. Condition B shall be located to the right of BEPQ and shall not be less than 20 percent of BEPQ. Pumps with head-capacity curves steeper than that assumed will produce somewhat less flow at somewhat lower head. The reverse will occur with pumps having a shallower head-capacity curve. Net positive suction head available (NPSHA), as listed for Condition B is calculated on a pumped flow of 0.29 mgd.

c. Condition C is the anticipated continuous duty maximum head condition. Provide pumps furnished under this specification capable of sustained (24 hours per day) operation at this condition within the requirements set forth in Section 43 23 03. Condition C shall be located within the Preferred Operating Region as established by the pump manufacturer in accordance with ANSI/HI 9.6.3, and list in the manufacturer's published application data for the specific model proposed for this application

d. Total head in the above tabulation is the algebraic difference between the discharge head and suction head as defined in ANSI/HI 1.1–1.6. NPSHA in the above tabulation is referred to the pump inlet piping at centerline elevation as shown and is calculated in accordance with ANSI/HI 1.3 for average barometric pressure and maximum temperature conditions. NPSHA at the pump impeller eye can be determined by adjusting the given value by proposed pump dimensions and the indicated requirements for pump installation details. An allowance of 5 feet has been included for the presence of volatile constituents in the pumped fluid. Ensure that the required NPSHA margin is as specified in Section 43 23 03.

C. Design requirements:

Item	Value	
Equipment number	P-310	P-320
Pump		
Rigid sphere, inches diameter (max.), capable of pass through the pump from inlet to discharge, inch	0.8125	0.8125
Minimum efficiency Condition A, percent [a]	40	50
Piping connection size, inches, minimum		
Pump inlet	3	3
Pump discharge	3	3
Operating speed, rpm, maximum	3450	3450
Operating speed, Constant or Variable	Constant	Constant
Approximate pump suction centerline elevation, feet, NAVD 88		
Motor (See Section 43 05 21)		
Horsepower [b]	7.5	10
Type (See Section 43 05 21)	Project defined Type 1 – General Purpose, Open or Enclosed	Project defined Type 1 – General Purpose, Open or Enclosed
Inverter duty	Yes	Yes
Space heater	Yes	Yes
Thermal protection	Yes	Yes
Ambient duty rating	+40	+40
Operating speed, rpm, maximum	3450	3450
Voltage rating	460 volt, 3 Phase	460 volt, 3 Phase
Hazardous rating	None	None
Reversing motor	No	No
Multi-speed motor	No	No
Motor starting type	Constant	Constant

Notes:

a. The minimum acceptable efficiency at Best Efficiency Point (BEP) at the speed required to achieve the performance specified under Condition Points A and B. The minimum acceptable efficiency is not necessarily required to be associated with any operating condition specified in paragraph 2.03 Operating Conditions.

b. Select a motor that is non-overloading within the selection criteria set forth in Section 43 05 21. Pump selections that do not conform to this requirement without requiring a motor with a nameplate rating greater than that listed are not acceptable.

2.04 NOT USED

2.05 MATERIALS

A. Materials specified are considered the minimum acceptable for the purposes of durability, strength, and resistance to erosion and corrosion. The Subcontractor may propose alternative materials for the purpose of providing greater strength or to meet required stress limitations. However, alternative materials must provide at least the same qualities as those specified for the purpose.

Component	Material
Casing	Cast iron, ASTM A48, Class 25 or better
Impeller	Ductile iron, 60-40-18, ASTM A536 or Cast iron, ASTM A48, Class 25
Cover and seal plates	Cast iron, ASTM A48, Class 30
Wear plate	Cast iron, ASTM A48, Class 30
Impeller shaft	Alloy steel, AISI 4140
Shaft sleeve	Stainless steel, ASTM A276, Type 304
Mechanical seal	
• Rings	Tungsten titanium carbide, tungsten carbide, or silicon carbide
• Cage and spring	Stainless steel, ASTM A276, Type 316
• Bellows	Viton
• Seat	Stainless steel, ASTM A276, Type 304
• O-Rings	Viton

2.06 COMPONENTS

A. Discharge and Suction Ports:

1. Provide each pump with a Class 125 ductile or cast iron flanged connection on suction and discharge ports.

B. Casing:

1. Self-priming centrifugal pumps shall be the volute casing type designed to retain sufficient liquid to prime and reprime the pump without a check valve in the inlet piping. Provide inlet check valves integral to the pump and ensure that they are removable and replaceable without disturbing inlet and discharge piping. Provide a removable suction piece or cover plate to permit access to the pump impeller and wear plate and allow access for service and repairs without removing suction or discharge piping.

2. Provide pumps capable of passing the size sphere specified in paragraph 2.03 Design Requirements. Submit certified dimensional drawings indicating size and locations of the priming recirculation port or ports.

C. Impeller:
1. Select a pump impeller that is the 2-vane non-clog type, with pump-out vanes provided on the rear shroud to reduce pressure on the shaft seal and eliminate solids buildup at the shaft. Provide a replaceable cast iron wear plate, held in place by the cover plate. Provide means for external adjustment of the impeller to the wear plate. Ensure that the entire rotating assembly, consisting of impeller, shaft, seal, and bearings, is removable as a unit without removing the pump volute or piping.

D. Shafting:
1. Select a pump shaft of ample strength to withstand all bending loads, keyed at the driven end for installation of motor, and threaded at the opposite end for installation of the impeller. Provide a shaft with a removable sleeve.

E. Mechanical seal:
1. Seal the pump shaft against leakage by a mechanical seal. Provide materials as specified in paragraph 2.04.
2. Lubricate the seal with oil from a separate, oil-filled reservoir. Do not use the same oil to lubricate both shaft seal and shaft bearings.

F. Bearings:
1. Provide the pumps with two sets of heavy-duty oil-lubricated ball bearings, designed to withstand all radial and thrust loads as well as the loads imposed by the drive unit. Inboard bearing shall be a double ball race. Lubricate bearings by an oil reservoir, independent from the shaft seal lubricant reservoir. Retain bearings in a heavy cast iron frame, removable from the casing without disturbing the inlet and discharge connections. Provide bearings with an L-10 rating life of 50,000 hours as specified in Section 43 05 11.

G. Motor: Conform to the requirements of paragraph 2.03 and Section 43 05 21.

H. Drive unit: Connect the pump and electric motor with a flexible coupling that permits angular misalignment and will not transmit backlash. Conform the coupling to the requirements of Section 43 05 11. Provide a coupling guard conforming to the requirements of Section 43 05 11.

2.07 EQUIPMENT MOUNTS

A. Mounting plates: fabricated steel frame. Mounting plates per Section 43 05 13. Mounting plate leveled to 0.1 inch/foot or less.

B. Pump and motor mounted on a common baseplate.

C. Grout type: cementitious non-shrink grout per Section 03 60 00.

2.08 FINISHES

A. Procedures: Section 09 90 00.

B. Prime coat: Shop applied, coating material per 09 90 00.

C. Finish coat: Field applied, coating material per 09 90 00.

2.09 SOURCE QUALITY CONTROL

A. Hydrostatic tests:
   1. Factory test all pressure-sustaining parts in accordance with Section 43 23 03.

B. Performance tests:
   1. Subject each pump to non-witnessed performance test in accordance with Section 43 23 03 to verify the full range of operating conditions.
   2. Provide a written report stating the tests have successfully been completed along with the results of the test under submittals. Personally certify the report by signature under penalty of perjury by an officer of the pump manufacturing corporation.

C. Motor tests:
   1. Check motor rating and electrical connections for compliance with the specifications.
   2. Subject all motor circuits to electrical resistance tests to confirm functionality.

PART 3 EXECUTION

3.01 EQUIPMENT MOUNTING

A. Procedure: Section 43 05 13.

B. Position equipment pad and equipment anchors for final placement of equipment.

C. Use a bolting template to position equipment anchors.

D. Level mounting plates.

E. Pour grout bed supporting each mounting plate.

F. Eliminate grout voids below mounting plate.

G. Tension equipment anchors.

H. Provide a completed Form 43 05 13-A, Section 01 99 90, for each equipment installation.

3.02 ALIGNMENT

A. Procedures: Section 43 05 14.

3.03 FIELD QUALITY CONTROL

A. Field or site tests and inspections:
   1. After completion of installation, field test each pumping unit in accordance with Section 01 91 14 and the following, to demonstrate compliance with the performance requirements as specified.
   2. Include pump reprime testing with field with the inlet piping and pump check valves held open. Demonstrate reprime lift repeatability by five sequential reprime cycles. Provide a factory-trained representative to supervise the reprime test. Failure to pass the reprime test will be cause for rejection of the pumps.

B. Manufacturer services:
   1. On-site inspections and training: Provide a factory-trained manufacturer's representative at the site for the following activities. Specified durations do not include travel time to or from the site.
      a. Include a total of 8 hours by an experienced factory trained personnel to certify the installation, assist with start (if required) and provide brief training.

3.04 SYSTEMS STARTUP

A. Procedures: Section 01 91 14.

B. Component testing:
   1. Provide temporary piping for testing the pumps and operate the pump.
   2. Perform testing in the presence of the Construction Manager.
   3. Record and submit test results.

C. Operational testing: Section 01 91 14.

D. Commissioning: Section 01 91 13.

END OF SECTION

SECTION 43 23 89.11

HORIZONTAL, CONSTANT SPEED, END SUCTION CENTRIFUGAL PUMPS

PART 1 GENERAL

1.01 SUMMARY

A. This section specifies horizontal, constant speed, end suction, centrifugal pumps for pumping various flows within the CASSF.
   1. Pumps shall conform to ASME B73.1.
   2. Equipment furnished under this section shall conform to the requirements of this section and requirements in Section 43 23 03.

B. Equipment List

Item	Equipment Number
Blend Tank Mixing Pump	P-350
Pathogen Pump 1	P-630
Pathogen Pump 2	P-640
BAC Backwash Transfer Pump	P-840
CCRO Permeate Pump	P-1035
CIP Fill Pump	P-1080

1.02 RELATED SECTIONS

A. This section contains specific references to the following related sections. Additional related sections not specifically listed below may apply.
   1. Section 43 05 11: General Requirements for Equipment
   2. Section 43 05 13: Rigid Equipment Mounts
   3. Section 43 05 14: Machine Alignment
   4. Section 43 05 21: Common Motor Requirements for Equipment
   5. Section 43 23 03: General Requirements for Centrifugal Pumps

1.03 REFERENCES

A. This section contains references to the following documents. These references are a part of this section as specified and modified. Where a referenced document contains references to other standards, those documents are included as references under this section as if referenced directly. If requirements of this section conflict with those of the listed documents, requirements of this section prevail.

B. Unless otherwise specified, reference documents refer to documents in effect at the time of Advertisement for Bids or Invitation to Bid (or on the effective date of the Agreement if no Bids). If referenced documents have been discontinued by the issuing organization, refer to replacement documents issued or otherwise identified by that

organization. If there are no replacement documents, refer to the last version of the document before it was discontinued. Where document dates are given in the following listing, those documents refer to the specific document version associated with that date, regardless of whether the document has been superseded by a version with a later date, discontinued, or replaced.

Reference	Title
ASME B73.1	Horizontal End Suction Centrifugal Pumps for Chemical Process
ASTM A48 REV A	Gray Iron Castings
ASTM A216/A216M	Steel Castings, Carbon, Suitable for Fusion Welding, for High Temperature Service
ASTM A395	Ferrite Ductile Iron Pressure Retaining Castings for Use at Elevated Temperatures
ASTM A536	Ductile Iron Castings
Hydraulic Institute Standards	Standards of the Hydraulic Institute, 14th Edition
NSF/ANSI 61	Drinking Water System Components – Health Effects

1.04 DEFINITIONS

A. Terminology used in this section conforms to the following definitions:
   1. Equipment pad: concrete foundation (block or slab) supporting and elevating equipment mounts above the supporting structural floor slab or local grade.
   2. Mounting pads: thickened or raised areas of baseplates and soleplates where feet or mounting surfaces of mounted equipment and drivers rest on the baseplate or soleplate.

1.05 ADMINISTRATIVE REQUIREMENTS

A. Unit Responsibility
   1. The Contractor shall assign unit responsibility as specified in Section 43 05 11 to the Supplier for the pumps and motors as specified in this section and Section 43 05 21.
   2. Provide a completed, signed, and notarized Certificate of Unit Responsibility.

1.06 SUBMITTALS

A. Action Submittals
   1. Comply with procedures described in Section 01 33 00.
   2. Comply with requirements of Section 43 23 03. Sections to be marked-up and submitted in accordance with Section 43 23 03 requirements include:
      a. This section
      b. Section 43 05 11: General Requirements for Equipment
      c. Section 43 05 13: Rigid Equipment Mounts
      d. Section 43 05 14: Machine Alignment

e. Section 43 05 21: Common Motor Requirements for Equipment
f. Section 43 23 03: General Requirements for Centrifugal Pumps

B. Informational Submittals
1. Comply with procedures described in Section 01 33 00.
2. Comply with requirements of Section 43 23 03.

C. Closeout Submittals
1. Comply with procedures described in Section 01 78 23.
2. Provide submittals that conform to the requirements of Section 43 23 03.
3. Spare Parts
a. Comply with procedures described in Section 01 33 00.
b. Provide the following spare parts:
1) One set of all pump bearings
2) One set of all pump gaskets
3) One complete mechanical seal.
c. Tag and store spare parts in accordance with provisions of Section 43 05 11.

1.07 QUALITY ASSURANCE

A. Certifications
1. Manufacturers proposing to furnish equipment specified under this section shall hold current certification under ISO 9001.
2. Application for certification under ISO 9001 is not an acceptable substitute for current certification. Documentation attesting to current certification shall be signed by an officer of the manufacturer's corporation and notarized.
3. The complete pump assembly shall be certified to NSF/ANSI standard 61. Manufacturers without NSF61 certification will not be considered. Written documentation demonstrating full compliance to NSF61 shall be provided as part of the submittal package. If the manufacturer's NSF certification is based on equivalent or superior materials specified, the standard materials will be acceptable (subject to review by the Engineer).

B. Critical Speeds
1. Critical Speeds shall be in accordance with Section 43 23 03-1.04.

C. Vibration Limits
1. Vibration limits shall be in accordance with Section 43 23 03-3.06 and subject to field testing in accordance with paragraph 3.04 of this section.

1.08 DELIVERY, STORAGE, AND HANDLING

A. Comply with procedures described in Section 01 61 00.

PART 2 PRODUCTS

2.01 MANUFACTURERS

A. The following candidate manufacturers are capable of producing equipment and/or products satisfying the requirements of this section. The manufacturer's standard product may require modification to conform to specified requirements.

Item	Value				
Equipment Number	P-350	P-630	P-640	P-840	P-1035, P-1080
Pump Name	Blend Tank Mixing Pump	Pathogen Pump 1	Pathogen Pump 2	BAC Backwash Transfer Pump	CCRO Permeate Pump CIP Fill Pump
Manufacturer	KSB Sewabloc or approved equal	Red Lion RJS-5SS or approved equal	March 320-CP-MD or approved equal	PACO 12507 LC or approved equal	Ampco KC2 or approved equal

2.02 PERFORMANCE/DESIGN CRITERIA

A. General

1. The pump shall be designed to pump the fluid type specified in 1.10.B. The pump shall operate without clogging or fouling caused by material in the pumped fluid at any operating condition within the range of service specified.
2. The pump shall be designed to operate without cavitation, and the motor and pump combination shall operate without vibration over the specified range of conditions. The pump head capacity curve shall slope in one continuous curve with no point of reverse slope inflection.
3. All components shall be designed to safely withstand forces resulting from flow reversals up to 125 percent of maximum speed within the pump during shutdowns caused by power failure.
4. The complete pumping unit shall be designed to operate without overload on any component at any point along the pump's entire operating curve.

B. Service Conditions

Item	Value			
Equipment Number	P-350	P-630, P-640	P-840	P-1035, P-1080
Area exposure	Outdoor			
Fluid type	Screened, and degritted sewage	MBR filtrate, no solids	BAC filtrate, no solids	RO permeate, no solids, pH 5-7
Fluid temperature	25 to 35 degrees C			

C. Operating Conditions

Operating Condition	**Value**					
Equipment Number	P-350	P-630	P-640	P-840	P-1035	P-1080
Condition A [a,d] (Guaranteed Head Condition):						
Capacity, gpm	208	2.75	0.55	20	10	50
Total head, feet	6	145	30	22	21	16
Net positive suction head available (NPSHA), feet	34	37	36	36	38	39
Condition B [b,d] (Minimum Head Condition):						
Capacity, gpm	From Flow vs Curve (TBD by pump manufacturer)					
Total head, feet	5	15	10	21	20	15
NPSHA, feet	34	41	39	37	39	40
Condition C [c,d] (Maximum Head Condition):						
Capacity, gpm	From Flow vs Curve (TBD by pump manufacturer)					
Total head, feet	10	149	33	25	25	22
NPSHA, feet	34	33	34	33	34	33

Notes:

a. Condition A shall be taken as the rated, continuous-duty operating condition. Performance at the rated condition shall be guaranteed in accordance with Section 43 23 03. Condition A has been selected to obtain the rated pumping capacity for the installation. It is not intended that the pumps be selected for maximum efficiency at Condition A. Pumps furnished under this section shall be selected to achieve Condition A performance, and shall operate continuously without objectionable vibration or cavitation at the head specified under Condition B. Condition A may be located in the Preferred Operating Region as established by the pump manufacturer in accordance with ANSI/HI 9.6.3 and published in the manufacturer's published application data for the specific model proposed for this application.

b. Condition B head is presented to indicate operating conditions when pump is operating against minimum anticipated system head, assuming a hypothetical head-capacity curve. Condition B shall be used for pump selection. Condition B shall be located within the Preferred Operating Region as established by the pump manufacturer in accordance with ANSI/HI 9.6.3 and listed in the manufacturer's published application data for the specific model proposed for this application. Condition B shall be located to the right of BEPQ and shall be not less than 20 percent of BEPQ. Pumps with head-capacity curves steeper than that assumed will produce somewhat less flow at somewhat lower head.

c. Condition C is the anticipated continuous duty maximum head condition. Pumps furnished under this specification shall be capable of sustained (24 hours per day) operation at this condition within the requirements set forth in Section 43 23 03. Condition C shall be located within the

Preferred Operating Region as established by the pump manufacturer in accordance with ANSI/HI 9.6.3 and listed in the manufacturer's published application data for the specific model proposed for this application.

d. Total head in the above tabulation is the algebraic difference between the discharge head and suction head as defined in ANSI/HI 1.1 – 1.6. NPSHA in the above tabulation refers to the pump inlet piping at centerline elevation as shown and is calculated in accordance with ANSI/HI 1.3 for average barometric pressure and maximum temperature conditions. NPSHA at the pump impeller eye can be determined by adjusting the given value by proposed pump dimensions and the indicated requirements for pump installation details. An allowance of five feet has been included for the presence of volatile constituents in the pumped fluid. Required NPSHA margin shall be as specified in Section 43 23 03.

D. Design Requirements

Item	**Value**					
Equipment Number	P-350	P-630	P-640	P-840	P-1035	P-1080
Pump						
Minimum efficiency at best efficiency point (BEP), percent [a]	52	TBD (by Supplier)	TBD (by Supplier)	54.3	24.2	24.2
Piping connection size, inches, minimum						
Pump inlet	3	1	1/2	1.5	1	1
Pump discharge	2.5	1	3/8	1.25	0.75	0.75
Operating speed, rpm, maximum	3500	TBD (by Supplier)	3450	1725	3500	3500
Operating speed, constant or variable	Constant					
Approximate pump suction centerline elevation, feetNGVD 29	118	118	118	121	121	121
Motor (See Section 43 05 21)						
Minimum Horsepower	1	0.75	1/12	0.75	0.5	0.5
Type (see Section 43 05 21)	TEFC	TEFC	Air Cooled	TEFC	TEFC	TEFC
Inverter duty	No	No	No	No	No	No
Space heater	No	No	No	No	No	No
Thermal protection	Yes	Yes	Yes	Yes	Yes	Yes
Temperature sensors	See Section 43 05 21					
Ambient duty rating	+40 °C					

Item	Value					
Equipment Number	P-350	P-630	P-640	P-840	P-1035	P-1080
Voltage rating	460 volt, 60-hz, 3 Phase	115/230 volt, 60-hz, 1 Phase	115/230 volt, 60-hz, 1 Phase	460 volt, 60-hz, 3 Phase	460 volt, 60-hz, 3 Phase	460 volt, 60-hz, 3 Phase
Hazardous rating	None	None	None	None	None	None
Reversing motor	No	No	No	No	No	No
Multispeed motor	No	No	No	No	No	No
Motor starting type	Full Voltage	Full Voltage	Full Voltage	Full Voltage	Full Voltage	Full Voltage
ANSI	Yes	No, threaded FNPT	No, threaded MPT	No, Threaded FNPT	No, threaded NPT	No, threaded NPT
Frame-mounted	Yes	Close-coupled	Mag-Drive	Close-coupled	Close-coupled	Close-coupled

Note:

a The minimum acceptable efficiency at BEP at the speed required to achieve performance specified under Condition Point A and B. The minimum acceptable efficiency is not necessarily required to be associated with any operating condition specified in paragraph 2.03.B Operating Conditions.

THIS PAGE INTENTIONALLY LEFT BLANK

E. Vibration and Critical Speeds

1. The pumps shall comply with the requirements of Section 43 23 03-1.04.

2.03 SYSTEM OPERATION

A. P-350: The Blend Tank Mixing Pump will be installed in an unprotected outdoor location and manually operated at a fixed speed. The pump will be controlled by a local control panel. The pump will be started and stopped in response to calls from the local control panel to initiate mixing of the blend tank solution. The pump will automatically stop if a pressure setpoint is exceeded at the discharge pipe and a low-low level signal within the tank. The pump will operate at constant speed in accordance with the control strategy specified in Section 40 93 00.

B. P-630 and P-640: Pathogen Pump 1 and Pathogen Pump 2 will be installed in an unprotected outdoor location and manually operated at a fixed speed during pathogen sampling of the MBR filtrate. The pump will be controlled by a local control panel and will be started and stopped in response to calls from the local control panel to begin filtering. The pump will automatically stop if a pressure setpoint is exceeded at the pathogen sampling filter or if the low level setpoint at the Pathogen Test Tank is met.

C. P-840: The BAC Backwash Transfer Pump will be installed in an unprotected outdoor location and operate automatically based on the level in the BAC Filtrate Overflow Tank. It will provide BAC filtrate to the BAC Backwash Tank for storage. The BAC Backwash Transfer Pump will automatically switch on and run at a fixed speed when the high level setpoint is reached, The BAC Backwash Transfer Pump will automatically switch off when the low level setpoint in the BAC Filtrate Overflow tank is reached.

D. P-1035: The CCRO Permeate Pump will be installed in a covered outdoor location and will transfer CCRO permeate from the CCRO Permeate Tank to blend with the other Murray RO permeates at the flush tank and UV/AOP system. The CCRO Permeate Pump will operate continuously at a fixed speed while the CCRO Permeate Tank is above an operator-adjustable low level setpoint and is to automatically start upon the CCRO Permeate Tank reaching a high level setpoint. The operator can start and stop the CCRO permeate pump from the HMI when the pump is operating in SCADA Control Mode.

E. P-1080: The CIP Fill Pump will be installed in a covered outdoor location and transfer RO permeate from the RO Flush Tank to either the MF or RO CIP systems. The CIP Fill Pump will operate continuously at a fixed speed when called by the Main Plant PLC to begin filling the MF CIP tank or RO CIP tank and will automatically stop based on high level setpoints in those tanks or the low level setpoint in the RO flush tank.

2.04 MATERIALS

A. General

1. Materials specified are considered the minimum acceptable for the purposes of durability, strength, and resistance to erosion and corrosion. The Contractor may propose alternative materials to provide greater strength or meet required stress limitations. However, alternative materials must provide at least the same qualities as those specified for the purpose.

B. Pumps
1. Pump materials shall be as follows:

Component	Material					
	P-350	P-630	P-640	P-840	P-1035	P-1080
Casing and nozzles	Cast iron, ASTM A48	Cast iron, ASTM A48	Polypropylene	Cast iron, ASTM A48	316 Stainless Steel	316 Stainless Steel
Shaft	Steel, AISI 1045, or SAE 4140	Steel, or ceramic, or SAE 4140	Ceramic	Stainless Steel AISI-416	316 Stainless Steel	316 Stainless Steel
Frame	Cast iron, ASTM A48	N/A	N/A	N/A	N/A	N/A
Impeller	Cast iron, ASTM A48, or cast steel ASTM A216	Glass-filled thermoplastic, or cast iron, or cast steel, or polypropylene	Polypropylene	Aluminum Bronze ASTM B148 UNS C95400	316 Stainless Steel	316 Stainless Steel

2.05 COMPONENTS

A. Casing and Backhead
1. The back head shall permit removal of the impeller, shaft and bearings without disturbing piping connections.

B. Impeller
1. The pump impeller shall be open or reverse vane, single-suction type, screwed to the shaft, and sealed with an O-ring.

C. Shaft
1. The shaft, where inside the stuffing box, shall have no reduction in size as specified in paragraph 43 05 11-2.04 Mechanical Seals, or shall have standard NEMA design

D. Mechanical Seal
1. Single mechanical seals shall be provided as specified in paragraph 43 05 11-2.04 Mechanical Seals or the pump shall be mag-drive.
2. Seal liquid shall be provided from a tap in the pump volute or shall be easily accessible from the backside of the pump.

E. Bearing and Bearing Isolators
   1. Bearings and bearing isolators shall be provided as specified in paragraphs 43 23 03-1.04 Bearing Isolators and Pump Shaft Seals.

F. Motors
   1. Pumps shall be driven by motors conforming to the requirements of paragraph 2.03 Performance/Design Criteria and Section 43 05 21.

2.06 SOURCE QUALITY CONTROL

A. Hydrostatic Tests
   1. Factory test all pressure sustaining parts in accordance with Section 43 23 03.
   2. Hold castings at the test pressure for 30 minutes for all pumps with discharge nozzles 14 inches in diameter and less, and for 60 minutes for pumps with discharge nozzles 16 inches in diameter and greater.

B. Performance Tests
   1. Factory performance and net positive suction head (NPSH) tests will not be required. However, the manufacturer must be prepared to guarantee the performance specified under paragraph 2.03.

PART 3 EXECUTION

3.01 EQUIPMENT MOUNTING

A. Comply with procedures described in Section 43 05 13.

B. Position equipment pad and equipment anchors for final placement of equipment.

C. Use a bolting template to position equipment anchors.

D. Level baseplate.

E. Pour grout bed supporting each mounting plate.

F. Eliminate grout voids below mounting plate.

G. Tension equipment anchors, as recommended by the pump manufacturer.

H. Provide a completed Form 43 05 13-A, Section 01 99 90, for each equipment installation.

3.02 ALIGNMENT

A. Comply with procedures described in Section 43 05 14.

3.03 FIELD QUALITY CONTROL

A. Field Testing
   1. Perform vibration testing as specified in Section 43 23 03.

B. Manufacturer Services
   1. On-Site Inspections and Training
      a. Provide a factory-trained manufacturer's representative at the Site for the following activities. Specified durations do not include travel time to or from Site.
         1) Installation inspections
            a) Assist, supervise, and inspect the Contractor's activities during installation.
            b) Provide 4 inspection hours.
            c) Provide a completed Form 43 05 11-A, Section 01 99 90.
         2) System test phase inspections
         3) Training sessions
            a) Comply with procedures described in Section 01 91 13.
            b) Provide a minimum of 2 hours classroom training for each training session.
            c) Certify completion of training on Form 43 05 11-B, Section 01 99 90.

3.04 SYSTEMS STARTUP

A. Comply with procedures described in Section 01 91 14.

B. Preoperational (factory) testing: See paragraphs 1.07 and 2.07.

C. System testing
   1. If vibration testing reveals that operation is impaired by poor operation of ancillary equipment (sticking check valves, plugged air/vacuum reliefs, improperly torqued flanges, etc.), repair ancillaries and retest pumps if directed by the Owner.
   2. After Engineer review of the reports of vibration testing, participate in making any required adjustments to the pumping control strategy to avoid damaging vibrations, protect the pumps, and meet performance requirements.

END OF SECTION

SECTION 43 23 89.13

HORIZONTAL, VARIABLE SPEED, END SUCTION, CENTRIFUGAL PUMPS

PART 1 GENERAL

1.01 SUMMARY

A. This section specifies horizontal, end suction, frame mounted (where applicable) centrifugal pumps for pumping screened and degritted sewage or other liquids specified later in this Section. Applicable pumps shall conform to ANSI/ASME B73.1.

1. Equipment furnished under this section shall conform to the requirements of this section and to the requirements in Section 43 23 03.

B. Equipment List

Item	Equipment Number
BNR Feed Pump	P-360
IMLR Pump	P-440
MF Transfer Pump	P-824
RO CIP Pump	P-1065
Flush Pump	P-1085

1.02 RELATED SECTIONS

A. Section 26 24 19: Motor Control Centers

B. Section 43 05 11: General Requirements for Equipment.

C. Section 43 05 13: Rigid Equipment Mounts

D. Section 43 05 14: Machine Alignment

E. Section 43 05 21: Common Motor Requirements for Equipment

F. Section 43 23 03: General Requirements for Centrifugal Pumps

1.03 REFERENCES

A. This section contains references to the following documents. These references are a part of this section as specified and modified. Where a referenced document contains references to other standards, those documents are included as references under this section as if referenced directly. If requirements of this section conflict with those of the listed documents, requirements of this section prevail.

B. Unless otherwise specified, reference documents refer to documents in effect at the time of Advertisement for Bids or Invitation to Bid (or on the effective date of the Agreement if no Bids). If referenced documents have been discontinued by the issuing organization, refer to replacement documents issued or otherwise identified by that

organization. If there are no replacement documents, refer to the last version of the document before it was discontinued. Where document dates are given in the following listing, those documents refer to the specific document version associated with that date, regardless of whether the document has been superseded by a version with a later date, discontinued, or replaced.

Reference	Title
ANSI/AME B73.1	Horizontal End Suction Centrifugal Pumps for Chemical Process
ASTM A48 –REV A	Gray Iron Castings
ASTM A216/A216M	Steel Castings, Carbon, Suitable for Fusion Welding, for High Temperature Service
ASTM A395	Ferrite Ductile Iron Pressure Retaining Castings for Use at Elevated Temperatures
ASTM A536	Ductile Iron Castings
Hydraulic Institute Standards	Standards of the Hydraulic Institute

1.04 DEFINITIONS

A. Terminology used in this section conforms to the following definitions:
   1. Equipment pad: concrete foundation (block or slab) supporting and elevating equipment mounts above the supporting structural floor slab or local grade.
   2. Mounting pads: thickened or raised areas of baseplates and soleplates where the feet or mounting surfaces of mounted equipment and drivers rest on the baseplate or soleplate.

1.05 ADMINISTRATIVE REQUIREMENTS

A. Coordination
   1. Coordinate pump and motor operational and starting characteristics with adjustable frequency drive settings used for control of this equipment. Include the following:
      a. Motor minimum operational speed
      b. Motor maximum operational speed
      c. Motor ramp-up and ramp-down speed, voltage, and frequency requirements
      d. Other operating limits imposed by the driven equipment for operation and warranty.

B. Unit Responsibility
   1. Assign unit responsibility, as specified in Section 43 05 11, to the pump manufacturer for the equipment specified in this section and the variable-frequency drive controllers specified in Section 26 24 19. The Contractor shall ensure that the pump manufacturer has verified and certified that the pump motor and VFDs are compatible.
   2. Provide a completed, signed, and notarized Certification of Unit Responsibility.

1.06 SUBMITTALS

A. Action Submittals
   1. Comply with procedures described in Section 01 33 00.
      a. Copy of this Section, with each paragraph check-marked to indicate specification compliance or marked to indicate requested deviations from specification requirements.
      b. Check-marks (✓) to denote full compliance with a paragraph as a whole. Underline deviations and denote by a number in the margin to the right of the identified paragraph. The remaining portions of the paragraph not underlined will signify compliance. Include a detailed, written justification for each deviation.
      c. Failure to include a copy of the marked-up specification sections with justification(s) for any requested deviation will cause rejection of the entire submittal with no further consideration.
   2. Comply with requirements of Section 43 23 03. Sections to be marked-up and submitted in accordance with Section 43 23 03 requirements include:
      a. This section
      b. Section 43 05 11: General Requirements for Equipment
      c. Section 43 05 13: Rigid Equipment Mounts
      d. Section 43 05 14: Machine Alignment
      e. Section 43 05 21: Common Motor Requirements for Equipment
      f. Section 43 23 03: General Requirements for Centrifugal and Axial Flow Pumping Equipment

B. Informational Submittals
   1. Comply with procedures described in Section 01 33 00.
   2. Submittals shall conform to the requirements of Section 43 23 03.
   3. Provide letter of confirmation of suitability of variable frequency drives being provided by the Contractor in accordance with Section 26 24 19.
   4. Provide coordination items required for proper setup of the variable frequency drives as specified in paragraph 1.05 Coordination.

C. Closeout Submittals
   1. Comply with procedures described in Section 01 78 23.
   2. Provide submittals that conform to the requirements of section 43 23 03.
   3. Spare Parts
      a. Comply with procedures described in Section 01 33 00.
      b. Provide the following spare parts:
         1) One set of all pump bearings
         2) One set of all pump gaskets
         3) One complete mechanical seal

4) Tag and store spare parts in accordance with provisions of Section 43 05 11

1.07 QUALITY ASSURANCE

A. Certifications
1. Manufacturers proposing to furnish equipment specified under this section shall hold current certification under ISO 9001.
2. Application for certification under ISO 9001 is not an acceptable substitute for current certification. Documentation attesting to current certification shall be signed by an officer of the manufacturer's corporation and notarized.

B. Critical Speeds
1. Critical speeds shall be in accordance with Section 43 23 03-1.04.

C. Vibration Limits
1. Vibration limits shall be in accordance with Section 43 23 03-3.06 and subject to field testing in accordance with paragraph 3.04 of this section.

1.08 DELIVERY, STORAGE, AND HANDLING

A. Comply with procedures described in Section 01 61 00.

PART 2 PRODUCTS

2.01 MANUFACTURERS

A. The following candidate manufacturers are capable of producing equipment and/or products satisfying the requirements of this section. The manufacturer's standard product may require modification to conform to specified requirements:
1. <u>BNR Feed Pump (P-360)</u>
(a) Goulds Model 3196
(b) Peerless 8196
(c) Flowserve-Durco Mark 3 ANSI
(d) Or approved equal
2. <u>IMLR Pump</u>
(a) Peerless 8196
(b) Or approved equal
3. <u>MF Transfer Pump (P-824)</u>
(a) PACO 12707 LC
(b) Or approved Equal
4. <u>RO CIP Pump (P-1065)</u>
(a) Ampco ZC2
(b) Or approved equal

5. Flush Pump (P-1085)
   (a) Ampco ZC2
   (b) Or approved equal

2.02 APPROVED TYPE

A. ANSI (where applicable) horizontal, end suction, centrifugal pumps capable of variable speed operation.

2.03 PERFORMANCE/DESIGN CRITERIA

A. General
1. The pump shall be designed to pump the fluid type specified in 2.3.B and operate without clogging or fouling caused by material in the pumped fluid at any operating condition within the range of service specified.
2. The pump shall be designed to operate without cavitation and the motor and pump combination shall operate within the acceptable vibration limits over the specified range of conditions. The pump head capacity curve shall slope in one continuous curve with no point of reverse slope inflection.
3. All components shall be designed to safely withstand forces resulting from flow reversals up to 125 percent of maximum speed within the pump during shutdowns caused by power failure.
4. The complete pumping unit shall be designed to operate without overload on any component at any point along the pump's entire operating curve.

B. Service Conditions

Description	Value				
Equipment number	P-360	P-440	P-824	P-1065	P-1085
Area exposure	Outdoor	Outdoor	Outdoor	Outdoor	Outdoor
Fluid type	Screened, and degritted sewage	Mixed Liquor	BAC Effluent	RO Permeate with 2% citric acid or 0.1% sodium hydroxide	RO Permeate, no solids, pH 5-7
Fluid temperature	25 to 30 degrees C	25 to 30 degrees C	25 to 30 degrees C	25 to 41 degrees C	25 to 30 degrees C

C. Operating Conditions

Operating condition	Value				
Equipment number	P-360	P-440	P-824	P-1065	P-1085
	Full Speed Operation, Condition A [a,e]				

Operating condition	Value				
Equipment number	P-360	P-440	P-824	P-1065	P-1085
Capacity, gpm	208	833.3	128	100	100
Total head, feet	47	6.6	19	106	88
Net positive suction head available (NPSHA), feet	34	50	37	37	39
	Full Speed Operation Condition B b,e				
Capacity, gpm	208	From pump H/Q curve	From pump H/Q curve	From pump H/Q curve	From pump H/Q curve
Total head, feet	From pump H/Q curve	6.3	17	96	87
NPSHA, feet	34	48	39	38	40
	Reduced Speed, Condition C c,e				
Capacity, gpm	208	From pump H/Q curve	From pump H/Q curve	From pump H/Q curve	From pump H/Q curve
Total head, feet	From pump H/Q curve	2.0	23	110	93
NPSHA, feet	34	51.5	33	33	33
	Reduced speed operation, Condition D d,e				
Capacity, mgd	0	0	0	0	0
Total head, feet	63.9	1.4	17	96	87
NPSHA, feet	N/A	N/A	N/A	N/A	N/A

Notes:

a. Condition A shall be taken as the rated operating condition. Performance at the rated condition shall be guaranteed in accordance with Section 43 23 03. Condition A has been selected to obtain the rated pumping capacity for the installation. It is not intended that the pumps be selected for maximum efficiency at Condition A. Pumps furnished under this section shall be selected to achieve Condition A performance, and shall operate continuously without objectionable vibration or cavitation at the head specified under Condition B. Condition A may be located in the Allowable Operating Region as established by the pump manufacturer in accordance with ANSI/HI 9.6.3 and published in the manufacturer's published application data for the specific model proposed for this application.

b. Condition B head is presented to indicate operating conditions when the pump is operating at maximum speed against minimum anticipated system head, assuming a hypothetical head-capacity curve. Condition A shall be used for pump selection. Condition B shall be located within the Preferred Operating Region as established by the pump manufacturer in accordance with ANSI/HI 9.6.3 and listed in the manufacturer's published application data for the specific model proposed for this application. Condition B shall be located to the right of BEPQ and shall be not less than 20% percent of BEPQ. Pumps with head-capacity curves steeper than that assumed will produce somewhat less flow at somewhat lower head. The reverse will occur with pumps having a shallower head-capacity curve. Proposed pump selections meeting this discharge head requirement by operating the equipment at less than full speed will be rejected. NPSHA, as listed for Condition B is calculated on a pumped flow of 218 gpm.

c. Condition C is the anticipated continuous duty minimum speed condition. Pumps furnished under this specification shall be capable of sustained (24 hours per day) operation at this condition within the requirements set forth in Section 43 23 03. Condition C shall be located within the Preferred Operating Region as established by the pump manufacturer in accordance with ANSI/HI 9.6.3 and listed in the manufacturer's published application data for the specific model proposed for this application.

d. Condition D represents the expected momentary (startup/shutdown) condition. Pumps furnished under this specification will operate for no more than 30 seconds at this condition when initiating or terminating a service cycle. The maximum anticipated number of service cycles is 12 per day.

e. Total head in the above tabulation is the algebraic difference between the discharge head and suction head as defined in ANSI/HI 1.1 – 1.6. NPSHA in the above tabulation refers to the pump inlet piping at centerline elevation as shown and is calculated in accordance with ANSI/HI 1.3 for average barometric pressure and maximum temperature conditions. NPSHA at the pump impeller eye can be determined by adjusting the given value by proposed pump dimensions and the indicated requirements for pump installation details. An allowance of five feet has been included for the presence of volatile constituents in the pumped fluid. Required NPSHA margin shall be as specified in Section 43 23 03.

D. Design Requirements

Item	Value				
Equipment number	P-360	P-440	P-824	P-1065	P-1085
Pump	BNR Feed Pump	IMLR	MF Transfer Pump	RO CIP	RO Flush
Minimum efficiency at best efficiency point (BEP) at maximum speed, percent[a]	63	78	74.99	51.7	51.7
	Piping connection size, inches, minimum:				
Pump inlet	3	6	3	2	2
Pump discharge	2	4	2.5	1.5	1.5
Operating speed, rpm, maximum	3,500	900	1765	3,600	3,600
Operating speed, constant or variable	Variable	Variable	Variable	Variable	Variable
Approximate pump suction centerline elevation, feet, NAVD 88	118	122.75	121	121	121
Motor (See Section 43 05 21)					
Horsepower	5	2	1	7.5	7.5
Type	See Section 43 05 21	See Section 43 05 21	TEFC	TEFC	TEFC
Inverter duty	Yes	Yes	Yes	Yes	Yes
Space heater	No	No	No	No	No
Thermal protection	Yes	Yes	Yes	Yes	Yes
Temperature sensors	See Section 43 05 21	See Section 43 05 21			

Item	Value				
Equipment number	P-360	P-440	P-824	P-1065	P-1085
Ambient duty rating	+40°C	+40°C	+40°C	+40°C	+40°C
Voltage rating	460 volt, 3 Phase	460 volt, 3 Phase	460 volt, 3 Phase	460 volt, 3 Phase	460 volt, 3 Phase
Hazardous rating	None	None	None	None	None
Reversing motor	No	No	No	No	No
Multispeed motor	Yes	Yes	Yes	Yes	Yes
Motor starting type	Variable speed drive	Variable speed drive	Variable speed drive	Variable speed drive	Variable speed drive
ANSI	Yes	Yes	ASME 125 Flange	ASME 125 Flange	ASME 125 Flange
Mount	Frame	Frame	Close Coupled	Close Coupled	Close Coupled

Note:

a The minimum acceptable efficiency at BEP at the speed required to achieve the performance specified under Condition Points A and B. The minimum acceptable efficiency is not necessarily required to be associated with any operating condition specified in paragraph 2.03.B Operating Conditions.

E. Vibration and Critical Speeds

1. The pumps shall comply with the requirements of Section 43 23 03-1.04.

2.04 SYSTEM OPERATION

A. P-360: The BNR Feed Pump will be installed in an unprotected outdoor location at an approximate elevation of 34 feet above sea level. The BNR Feed Pump will be controlled by a local control panel. The pump will be started and stopped in response to calls from the local control panel to convey flow to the BNR system. The pump requires a valve position permissive signal to start. The pump will operate at variable speed in accordance with the control strategy specified in Section 40 93 00.

B. P-440: The IMLR Pump will be installed in an unprotected outdoor location and be provided by the Wastewater System Supplier. The IMLR Pump will return mixed liquor from the Aerobic Zone 2 to the Deox Tank within the Biological Nutrient Removal tank. The IMLR pump will be controlled by a local control panel. The pump will operate continuously at a speed setting to maintain an operator-defined flow setpoint and will be trimmed based on inputs received from the BNR System PLC. The pump will operate at variable speed in accordance with the control strategy specified in Division 40.

C. P-824: he MF Transfer Pump will be installed in an outdoor location and will provide BAC Filtrate to the MF System. The MF Transfer Pump shall operate continuously at a speed setting to maintain a flow setpoint defined by the MF System, while the BAC Filtrate Tank is above an operator-adjustable low level setpoint. The MF Transfer Pump is to automatically start upon startup of the MF System and will be trimmed based on inputs received from MF System PLC via the Main PLC . The pump will

operate at variable speed in accordance with the control strategy specified in Division 40.

D. P-1065: The RO CIP Pump will be installed in a covered outdoor location and will provide CIP solution to any of the four installed RO trains at the CASSF. The RO CIP Pump shall operate continuously at a speed setting to maintain an operator-defined flow setpoint through the specific RO system undergoing CIP. The RO CIP Pump is to automatically stop upon the RO CIP Tank reaching a low level setpoint. The operator can start, stop, and vary the speed of the RO CIP Pump from the HMI when the pump is operating in SCADA Control Mode.

E. P-1085: The RO Flush Pump will be installed in a covered outdoor location and will provide RO Permeate to any of the four installed RO trains at the CASSF. The RO CIP Pump shall operate continuously at a speed setting to maintain an operator-defined flow setpoint through the specific RO system undergoing flush. The RO Flush Pump is to automatically stop upon the RO Flush Tank reaching a low level setpoint. The operator can start, stop, and vary the speed of the RO Flush Pump from the HMI when the pump is operating in SCADA Control Mode.

2.05 MATERIALS

A. General

1. Materials specified are considered the minimum acceptable for the purposes of durability, strength, and resistance to erosion and corrosion. The Contractor may propose alternative materials to provide greater strength or meet required stress limitations. However, alternative materials must provide at least the same qualities as those specified for the purpose.

B. Pumps

1. Pump materials shall be as follows:

Component	Material				
Equipment number	P-360	P-440	P-824	P-1065	P-1085
Casing and nozzles	Cast iron, ASTM A48	Cast iron, ASTM A48 or 316SS, A744 Gr. CF8M, or Ductile Iron A395 Gr 60-40-18	Cast Iron ASTM A48 – Class 30	316 Stainless Steel	316 Stainless Steel
Shaft	Steel, AISI 1045, or SAE 4140	Steel, AISI 1045, or SAE 4140, or 316SS, A276 Type 316 (less sleeve), or 316SS, A276	Cold Roll Steel AISI 1024 or Stainless Steel AISI 416	316 Stainless Steel	316 Stainless Steel

Component	Material				
		Type 316 (less sleeve)			
Frame	Cast iron, ASTM A48	Cast iron, ASTM A48 or Ductile Iron A536 Gr 60-42-10 or Cast Iron A48 Class 30, or Ductile Iron A536 Gr 60-42-10 or Cast Iron A48 Class 30	N/A	N/A	N/A
Impeller	Cast iron, ASTM A48, or cast steel ASTM A216	Cast iron, ASTM A48, or cast steel ASTM A216 or 316SS, A744 Gr. CF8M, or 316SS, A744 Gr. CF8M	Stainless Steel 304	316 Stainless Steel	316 Stainless Steel

2.06 COMPONENTS

A. Casing and Backhead
   1. The back head shall permit removal of the impeller, shaft, and bearings without disturbing piping connections.

B. Impeller
   1. The pump impeller shall be open or reverse vane, single-suction type, screwed to the shaft, and sealed with an O ring.

C. Shaft
   1. The shaft, where inside the stuffing box, shall have no reduction in size as specified in paragraph 43 05 11-2.04 Mechanical Seals, or shall have standard NEMA design.

D. Mechanical Seal
   1. Single mechanical seals shall be provided as specified in paragraph 43 05 11-2.04 Mechanical Seals.
   2. Seal liquid shall be provided from a tap in the pump volute or shall be easily accessible from the backside of the pump.

E. Bearing and Bearing Isolators
   1. Bearings and bearing isolators shall be provided as specified in paragraphs 43 23 03-1.04 Bearing Isolators and Pump Shaft Seals.

F. Motors

1. Pumps shall be driven by motors conforming to the requirements of paragraph 2.03 Performance/Design Criteria, Section 43 23 03, and Section 43 05 21.

2.07 SOURCE QUALITY CONTROL

A. Hydrostatic Tests
   1. Factory test all pressure sustaining parts.
   2. Hold castings at the test pressure for 30 minutes for all pumps with discharge nozzles 14 inches in diameter and less, and 60 minutes for pumps with discharge nozzles 16 inches in diameter and greater.

B. Performance Tests
   1. Factory performance and NPSH tests will not be required. However, the manufacturer must be prepared to guarantee the performance specified under paragraph 43 23 89.11-2.03.

PART 3 EXECUTION

3.01 EQUIPMENT MOUNTING

A. Comply with procedures described in Section 43 05 13.

B. Position equipment pad and equipment anchors for final placement of equipment.

C. Use a bolting template to position equipment anchors.

D. Level baseplate.

E. Pour grout bed supporting each mounting plate.

F. Eliminate grout voids below mounting plate.

G. Tension equipment anchors as recommended by the pump manufacturer.

H. Provide a completed Form 43 05 13-A Section 01 99 90, for each equipment installation.

3.02 ALIGNMENT

A. Comply with procedures described in Section 43 05 14.

3.03 FIELD QUALITY CONTROL

A. Field Testing:
   1. Perform lateral vibration testing as specified in Section 43 23 03.
   2. Include in the bid all costs for services of Testing Firms and Design Professionals performing these services.

B. Manufacturer Services
   1. On-Site Inspections and Training
      a. Provide a factory-trained manufacturer's representative at the Site for the following activities. Specified durations do not include travel time to or from Site.
         1) Installation inspections
            a) Assist, supervise, and inspect the Contractor's activities during installation.
            b) Provide 4inspection hours.
            c) Provide a completed Form 43 05 11-A, Section 01 99 90.
         2) Component test phase inspections
            a) Assist, supervise, and inspect the Contractor's activities during the system test phase specified in Section 01 91 14 and this Section.
            b) Provide 4 inspection hours.
         3) System test phase inspections
            a) Assist, supervise, and inspect the Contractor's activities during the system test phase specified in Section 01 91 14.
            b) Provide 2 inspection hours.
         4) Operational test phase inspections
            a) Assist, supervise, and inspect the Contractor's activities during the operational test phase specified in Section 01 91 14.
            b) Provide 2inspection hours.
         5) Training sessions
            a) Comply with procedures described in Section 01 91 14.
            b) Provide a minimum of 8 hours classroom training for each training session.
            c) Conduct two training sessions, one training session per week on two consecutive weeks to accommodate the shift schedules of operation and maintenance staff.
            d) Certify completion of training on Form 43 05 11-B, Section 01 99 90.

3.04 SYSTEMS STARTUP

A. Comply with procedures described in Section 01 91 14.

B. Component testing
   1. Complete lateral vibration testing of all pumps in accordance with Section 43 23 03.

C. System testing
   1. If vibration testing reveals that operation is impaired by poor operation of ancillary equipment (sticking check valves, plugged air/vacuum reliefs, improperly torqued flanges, etc.), repair ancillaries and retest pumps if directed by the Owner.

2. After Owner/Engineer review of the Vibration Design Professional's draft and final reports for lateral and torsional vibration participate with the Owner and Engineer to make required adjustments to the pumping control strategy to avoid damaging vibrations, protect the pumps, and meet performance requirements.

END OF SECTION

SECTION 43 24 41
POSITIVE DISPLACEMENT ROTARY LOBE PUMPS

PART 1 GENERAL

1.01 SUMMARY

A. This Section Includes:
   1. Positive displacement lobe pumps, convoluted rotor type. Ensure that equipment furnished under this section is of a convoluted design to provide uniform pulse-free flow, specifically designed for pumping mixed liquor for ML Pump.
   2. Provide pumps that have not less than three rotor lobe tips to prolong the life of the rotors.
   3. Ensure that pumps are complete with electric motor and all specified appurtenances.
   4. Pumping unit(s) consist of pump, shafting and couplings, electric motor, and all specified appurtenances, mounted on a common baseplate and a variable frequency drive (VFD).
   5. Related variable frequency drives are included in Section 26 24 19.
   6. Except as specifically referenced in this section, Section 43 23 03 provisions will not apply to equipment furnished under this section

B. Equipment List:

Item	Equipment no.
ML Pump	P-430
PWF Feed Pump	P-570

1.02 RELATED SECTIONS

A. This section contains specific references to the following related sections. Additional related sections may apply that are not specifically listed below:
   1. Section 03 60 00: Grouting
   2. Section 09 90 00: Protective Coating
   3. Section 26 24 19: Motor Control Centers
   4. Section 40 93 00: Plant Control Philosophy
   5. Section 43 05 11: General Requirements for Equipment
   6. Section 43 05 13: Rigid Equipment Mounts
   7. Section 43 05 14: Machine Alignment
   8. Section 43 05 21: Common Motor Requirements for Equipment

1.03 REFERENCES

A. This section contains references to the following documents. They are a part of this section as specified and modified. Where a referenced document contains references to other standards, those documents are included as references under this section as if referenced directly. In the event of conflict between the requirements of this section and those of the listed documents, the requirements of this section prevail.

B. Unless otherwise specified, references to documents mean the documents in effect at the time of Advertisement for Bids or Invitation to Bid (or on the effective date of the Agreement if there were no Bids). If referenced documents have been discontinued by the issuing organization, references to those documents mean the replacement documents issued or otherwise identified by that organization or, if there are no replacement documents, the last version of the document before it was discontinued. Where document dates are given in the following listing, references to those documents mean the specific document version associated with that date, regardless of whether the document has been superseded by a version with a later date, discontinued, or replaced.

Reference	Title
AGMA 6010-E	Spur, Helical, Herringbone, and Bevel Enclosed Drives
AGMA 6019-E	Gear Motors Using Spur, Helical, Herringbone, Straight Bevel, or Spiral Bevel Gears
ASTM A470	Vacuum Treated Carbon and Alloy Steel Forgings for Turbine Rotors and Shafts
ASTM A536	Cast Iron Castings

1.04 DEFINITIONS

A. Terminology used in this section conforms to the following definitions:
   1. Equipment pad: Concrete foundation (block or slab) supporting and elevating equipment mounts above the supporting structural floor slab or local grade.
   2. Mounting pads: Thickened or raised areas of baseplates and soleplates where the feet or mounting surfaces of mounted equipment and drivers rest on the baseplate or soleplate.
   3. Baseplate: Fabricated (welded structural steel elements), cast, or plate steel base, with or without grout fill, as specified, providing a common mounting element on which the legs, feet, or mounting surfaces of equipment (pump, gearbox, and motor) are mounted by bolted connections.
   4. Pump drive configuration types:
      a. “B” or close-coupled “block”: Close-coupled pump configuration employing a direct coupled motor and gear reducer or gear motor such that the motor/reducer combination provides the pump’s shaft bearing support.
      b. “BA-D” or “bearing assembly-direct”: Separate bearing frame assembly between the gear reducer and pump providing the pump’s shaft-bearing support, with the gear reducer directly connected to the motor.

c. “BA-V” or “bearing assembly-V belt”: Separate bearing frame assembly between the gear reducer and pump providing the pump’s shaft-bearing support, with the gear reducer connected to the motor by V-belt.

5. “Universal joint”: Rigid connecting rod with lubricated joints at each end connecting the pump drive shaft to the rotor (excludes flexible connecting shaft drives).
6. “Flexible shaft”: Flexible shaft with rigid joints at each end connecting the pump drive shaft to the rotor (excludes universal joint drives).

1.05 ADMINISTRATIVE REQUIREMENTS

A. Coordination:
1. Coordinate pump and motor operational and starting characteristics with VFD settings used for control of this equipment. Incorporate the following final VFD settings into the operation and maintenance submittal under Division 01:
   a. Motor minimum operational speed
   b. Motor maximum operational speed
   c. Motor ramp up and ramp down speed, voltage, and hertz requirements
   d. Other operating limits that are imposed by the driven equipment for operation and warranty

B. Unit Responsibility:
1. Assign unit responsibility, as specified in Section 43 05 11, to the Wastewater System Supplier (WWSS)for provisions of all equipment specified in this Section. Furnish all mechanical equipment components, at least, of this entire equipment assembly by the rotary lobe pump manufacturer. The WWSS is the unit responsibility manufacturer and has unit responsibility, as described in Section 43 05 11, for both the equipment assembly specified in this section, and variable frequency motor controllers specified in Section 26 24 1926 24 19.
2. Provide a completed, signed, and notarized Certificate of Unit Responsibility (Form 43 05 11-C, Section 01 99 90).

1.06 SUBMITTALS

A. Action Submittals:
1. Procedures: Section 01 33 00.
2. Sections to be marked-up and submitted include the following. Use check-marks (P) to denote full compliance with a paragraph as a whole. Underline and denote deviations with a number in the margin to the right of the identified paragraph. Remaining portions of the paragraph not underlined signify the contractor’s compliance with the specifications. Submit a detailed, written justification for each requested deviation. Failure to submit a copy of the marked-up specification sections, along with justification(s) for all requested deviations from the specification requirements, with the submittal is sufficient cause for rejection of the entire submittal with no further consideration:
   a. This section
   b. Section 43 05 11 - General Requirements for Equipment

c. Section 43 05 13 - Rigid Equipment Mounts
d. Section 43 05 14 - Machine Alignment
e. Section 43 05 21 - Common Motor Requirements for Equipment
f. Section 26 24 19 - Motor Controller Centers

3. Provide drawings showing general dimensions and confirming the size of pumps, motors, drives, and specified appurtenances; VFD piping connections; construction details of equipment (including bearings); wiring diagrams; and weight of equipment.
4. Provide predicted performance curves developed for the specific application. Show speed, capacity, head, horsepower, efficiency, and net positive suction head (NPSH) required for the specified operating range.
5. Provide motor submittal information specified in Section 43 05 21 and conform to the requirements of this specification.
6. Submit detail drawings of the pump and driver unit foundation demonstrating conformance to this section and Section 43 05 13. Include drawings depicting type, size, number, projection, and arrangement of anchor bolts, dimensional drawings of the baseplates, and dimensional drawings for the concrete support pad for the equipment. Have the drawings depict all other pertinent information, including: location of equipment pads and reinforcement, equipment drains, elevation of top of grout and grout thickness, elevation of top of baseplate or mounting block, size and location of electrical conduits, and any other equipment mounting features embedded in equipment pad.

B. Informational Submittals:
1. Procedures: Section 01 33 00.
2. Provide a letter of confirmation of suitability of variable frequency drives being provided by the contractor for this equipment in accordance with Section 26 24 19.
3. Identify coordination items required for proper setup of the VFD as specified in paragraph 1.05 Coordination.
4. Submit a completed Certificate of Unit Responsibility attesting that the contractor has assigned, and the WWSS accepts unit responsibility in accordance with the requirements of this section and Section 43 05 11-1.02 Unit Responsibility. No other submittal material will be reviewed until the certificate has been received and found to be in conformance with these requirements.
5. Provide operating and maintenance information as specified in Section 01 78 23, including manufacturer's warranties as specified and Section 01 78 23 and record of final VFD configuration settings.
6. Provide motor product data as specified in Section 43 05 21.
7. Provide the pump manufacturer's certified data showing location of critical speeds in relation to operating speeds in accordance with Section 43 05 17-2.01 Product Data.
8. Provide certification of satisfactory factory testing of each unit as specified in paragraph 1.07 Quality Assurance. Include copies of test logs and resulting performance curves.

C. Closeout Submittals:

1. Procedures: Section 01 78 23
2. Spare parts:
   a. Procedures: Section 01 33 00
   b. Provide one set of special tools for servicing all pumps. In addition, provide the following spare parts for each size and type of pump:
      1) One set V belts (if included with pump provided)
      2) Two sets of pump unit mechanical seals
      3) Two spare rotor sets, as specified, for each size pump
      4) One spare set of radial liners, if applicable
   c. Tag and store spare parts in accordance with provisions of Section 43 05 11
3. Submit Installation Certification Form 43 05 11-A.
4. Submit Training Certification Form 43 05 11-B.

1.07 QUALITY ASSURANCE

A. Certifications:
   1. Ensure that manufacturers proposing to furnish equipment specified under this section hold current certification under ISO 9001.
   2. Application for certification under ISO 9001 is not an acceptable substitute for current certification. Ensure that documentation attesting to current certification is signed by an officer of the manufacturer's corporation and notarized.

B. Performance Guarantee
   1. Manufacturer must guarantee the pump performance specified in paragraph 2.03 Performance/Design Criteria. Ensure that the guarantee is in writing, signed by an officer of the manufacturing corporation, and notarized. Under no circumstances can deviations from the specified operating conditions result in overload of the driver furnished with the equipment, nor can such deviations result in power requirements greater than the driver's nameplate (1.0 service factor) rating.

1.08 DELIVERY, STORAGE AND HANDLING

A. Procedures: Division 01

PART 2 PRODUCTS

2.01 MANUFACTURERS

A. The following candidate manufacturers are capable of producing equipment and/or products that will satisfy the requirements of this section. The manufacturer's standard product may require modification to conform to specified requirements:
   1. Pumps:
      a. Vogelsang USA
      b. Boerger
      c. LobePro
      d. Or approved equal

2.02 TYPE

A. Ensure that equipment furnished under this section is a positive displacement lobe pump, convoluted rotor type.

2.03 PERFORMANCE/DESIGN CRITERIA

A. Service Conditions:

Description	Value	
Equipment number	P-570	P-430
Area exposure	Outdoor	Outdoor
Fluid type	The fluid to be pumped is MBR Filtrate with less than 2 NTU.	The fluid to be pumped is mixed liquor and contains approximately 6,000 mg/L of mixed liquor suspended solids (MLSS).
Fluid temperature	80-86 degrees (°)F	80 - 86 degrees (°)F
Fluid pH	5 to 8	5 to 8

B. Operating Conditions:
1. Design and select equipment for continuous duty pumping of concentrated solids derived from the treatment of wastewater.
2. Ensure that pumps are suitable for exposure to mixed liquor, with a MLSS concentration of approximately 6,000 mg/L.

C. Performance Requirements:

Operating Condition	**Value**	**Value**
Equipment	P-570	P-430
Rated operating condition		
Capacity, gpm	168	746.5
Total head, psi	41	-14.6
Minimum operating condition		
Capacity, gpm	148	340.3
Total head, psi	34	-22.4
Maximum operation		
Capacity, gpm	168	746.5
Total head, psi	41	-11.2

D. Design Requirements:

Item	Value	Value
Equipment number	P-570	P-430
Pump		
Drive type	Closed-coupled block	Closed-coupled block (Type

Item	Value	Value
Equipment number	P-570	P-430
	(Type B)	B)
Piping connection size, inches		
Pump suction	4	8
Pump discharge	4	8
Operating speed at rated capacity, rpm, maximum	275	275
Operating speed, rpm, maximum	250	250
Variable frequency drive (VFD)	Yes	Yes
Motor (See Section 43 05 21)		
Horsepower, maximuma	10	10
Type (See Section 43 05 21)		
Inverter duty	Yes	Yes
Space heater	No	No
Thermal protection	Yes	Yes
Ambient duty rating	+40	+40
Operating speed, rpm, maximum	500	500
Voltage rating	460-volt, 3 Phase	460-volt, 3 Phase
Hazardous rating	None	None
Reversing motor	No	No
Multispeed motor	Yes	Yes
Motor starting type	VFD, coordinate for proper starting of driven equipment.	VFD, coordinate for proper starting of driven equipment.

2.04 SYSTEM OPERATION:

A. The pumps will be installed at an elevation of 120 to 125 feet above sea level. The pump will be controlled by the WWSS control panel. Pumps will run continuously, and pump speed will be adjusted in response to changing inputs into the WWSS control panel.

2.05 MATERIALS

A. Materials specified are considered the minimum acceptable for the purposes of durability, strength, and resistance to erosion and corrosion. The contractor may propose alternative materials for the purpose of providing greater strength or to meet required stress limitations. However, alternative materials must provide at least the same qualities as those specified for the purpose.

B. Ensure that materials conform to the requirements of API 610, Materials Class I-2 with the following conditions:

Component	Material
Casting and casing cover plates	Grey cast iron ASTM A536 or A48, 230 to 260 Brinell hardness, 700 Brinell on end cover plate
Rotors	Cast iron or steel core with covering as specified in paragraph 2.06 Components
Shafts	Carbon steel, ASTM A470
Shaft sleeve	Stainless steel, Type 316

2.06 COMPONENTS

A. Rotors:
   1. Ensure that each of the pumps utilize a minimum of two three-tip rotors, which are driven through positive-timing gears running in oil.
   2. Cover rotor cores with a layer of EPDM.
   3. The geometry of the rotor cores must be the same as that of the finished rotor. Convolute rotor vane geometry to provide pressure-pulse free operation. Designs with rotor vanes parallel to the shaft centerline will not be accepted.
   4. Ensure that the front cover permits removal of the rotors without disturbing piping, bearings, and mechanical seal; and include handles or other lifting devices for safe removal if cover weight exceeds 50 pounds. Fit both front and rear rotor case cover plates with a renewable hardened wear surfacing, secured to the pump.
   5. Position rotors on the shaft by replaceable hardened key ways, and secure to the shaft by internal/external expansion bolt and flush discs requiring no recesses in the end cover.

B. Castings:
   1. Ensure that the pump case top and bottom castings are cast iron. Provide wearing surfaces on the top and bottom castings.

C. Shaft Seals and Lubrication:
   1. Run the pump timing gears in oil and mount in a gear case contiguous with the pump case. Fit the gear case with a sight gage and oil fill and drain connections.
   2. Provide cartridge-style tungsten carbide/silicon carbide faced mechanical seals, replaceable through the front cover for the rotor shafts.
   3. Lubricate mechanical seals by a static bath of oil. Design pump shafts to provide sufficient stiffness to operate without distortion, damaging vibration, or excessive wear throughout the range of operation specified. Ensure that the pump shaft has a uniform diameter through the lobes bearings and mechanical seals to minimize the potential for shaft fatigue or shaft breakage.

D. Connections:
   1. Have the front cover plate use O-ring gaskets and quick-removal stainless steel nuts. Ensure that pump connections are ANSI 125-pound flanges.

E. Bearings:
   1. Ensure that bearings are as specified in Section 43 05 11.

2. Run bearings and timing gears for pump sizes 4 inches and smaller in an oil chamber provided with a sight glass level with the centerline of the lower shaft. For pump sizes 5 inches and greater, provide a separate oil reservoir for the bearings on each shaft with a level sight glass provided for each reservoir, or provide a forced feed and lubrication system to ensure adequate upper-bearing lubrication.
3. Design pump shafts to support all operating loads without support from an outboard bearing. Pumps with outboard bearing will be allowed. Design outboard bearings used to support longer shafts to be accessible from the outside of the pump for ease of maintenance and require in-line re-buildable features.

F. Mounting Plates
1. Rigidly mount each pump along with its associated motor, drive, and appurtenances on a common Type I baseplate as defined in Section 43 05 13.

G. Accessories:
1. Provide pumps with the following accessories for added pump protection:
   1) Motor over-temperature sensors
   2) Conductance probe in rear oil chamber to detect seal failure

2.07 EQUIPMENT MOUNTS

A. Mounting Plates: fabricated steel frame, baseplate, plate steel soleplate, polymer concrete soleplate, or corrosion resistant FRP baseplate. Mounting plates per Section 43 05 13.

B. Pump and motor mounted in piggyback configuration.

C. Grout Type: epoxy grout or cementitious non-shrink grout per Section 03 60 00.

2.08 Motor and drive unit

A. Ensure that electric motors conform to the requirements of paragraph 2.03 Design Requirements and Section 43 05 21. Motors for adjustable speed pumps must be inverter duty type and include a high motor temperature switch.

Provide electric motor manufacturer's standard overhaul instruction for motors 5 horsepower and larger.

B. Drive Unit:
1. Ensure that belts, sheaves, and guards are in accordance with Section 43 05 11.
2. Ensure that maximum speed reduction ratio for the V-belt is as recommended by the manufacturer. Design gear motors or gear reducers in accordance with AGMA 6019-E (Class II) or AGMA 6010-E (Service Factor 1.25).

C. Variable Frequency Drive:
1. Furnish the pump with an VFD as specified in Section 26 24 19.
2. Ensure that VFD’s are constant torque type and as specified in Section 26 24 19. For VFD-driven units, the pump supplier is responsible for providing the fixed

reduction between the motor and the pump. The reduction ratio must be that required to operate the pump at its maximum operating speed when the motor is operating at its nominal rated full speed in accordance with this specification. Ensure that VFD controls are such that pumps cannot operate at a speed lower than what corresponds to the minimum pumping rate as specified within this section.

3. Rate VFD for full motor torque from 25 percent to full speed.

2.09 ELECTRICAL AND INSTRUMENTATION COMPONENTS

A. Provide run-dry protection by discharge pressure monitoring

B. Provide motor winding temperature sensors as follows:
   1. Resistance temperature device (RTD): Platinum element, 3-wire, nominal 100 Ohms at 0 C.
   2. Two RTD's per motor winding.

2.10 FINISHES

A. Procedures: Section 09 90 00

B. Prime Coat: Shop applied, coating material per Section 09 90 00

C. Finish Coat: Field applied, coating material per Section 09 90 00

2.11 SOURCE QUALITY CONTROL

A. Factory Testing:
   1. Perform manufacturer's standard test.
   2. Factory performance tests will not be required. However, have the manufacturer guarantee the performance specified under paragraph 2.03 Performance Requirements.

PART 3 EXECUTION

3.01 EXAMINATION/EQUIPMENT MOUNTING

A. Procedure: Section 43 05 13

B. Position equipment pad and equipment anchors for final placement of equipment

C. Use a bolting template to position equipment anchors

D. Level mounting plates

E. Pour grout bed supporting each mounting plate

F. Eliminate grout voids below mounting plate

G. Tension equipment anchors

H. Provide a completed Form 43 05 13-A, Section 01 99 90, for each equipment installation

3.02 PREPARATION/ALIGNMENT

A. Procedures: Section 43 05 14

3.03 FIELD QUALITY CONTROL

A. Field Testing:
   1. Have the contractor include in the bid all costs for services of testing firms and design professionals performing these services.

B. Manufacturer Services:
   1. Onsite Inspections and Training: Provide a factory-trained manufacturer's representative at the site for the following activities. Specified durations do not include travel time to or from the site:
      a. Installation inspections: Assist, supervise, and inspect the contractor's activities during installation. Provide a completed Form 43 05 11-A, Section 01 99 90.
      b. Component test phase inspections: Assist, supervise, and inspect the Contractor's activities during the system test phase specified in Section 01 91 14 and this section.
      c. System test phase inspections: Assist, supervise, and inspect the contractor's activities during the system test phase specified in Section 01 91 14.
      d. Operational test phase inspections: Assist, supervise, and inspect the contractor's activities during the operational test phase specified in Section 01 91 14
      e. Provide a minimum of 8 hours of training conforming to the requirements of Section 01 43 33 and the following. Certify training on Form 43 05 11-B specified in Section 01 99 90. Include in the training instruction on field adjustment of rotor clearances and complete disassembly and subsequent reassembly of one pump.

3.04 SYSTEM STARTUP

A. Procedures: Section 01 91 14.

B. Preoperational (factory) testing; See paragraph 2.10.

C. System testing:
   1. After completion of installation, completely test the pumps to ensure compliance with operating requirements as specified and in accordance with the testing procedures in Section 01 91 14.

END OF SECTION

THIS PAGE INTENTIONALLY LEFT BLANK

SECTION 43 25 40.1
PACKAGED DRAIN PUMP STATIONS

PART 1 GENERAL

1.01 SUMMARY

A. This section covers two packaged pump stations to be furnished and installed complete with all equipment and appurtenances required to provide a complete and satisfactory pumping station. One pump station will be a duplex pump station and the other a simplex pump station.

B. Major equipment to be furnished includes the pump basin (deep manhole structure or curb inlet structure, submersible pumps, guiderail pump removal system, piping and valves, pump level control, and package electrical (starter) and control panel.

C. Equipment List

Item	Equipment Number
Plant Drain Pump No. 1	P-240
Plant Drain Pump No. 2	P-250
Storm Drain Pump	P-260

1.02 RELATED SECTIONS

A. This section contains specific references to the following related sections. Additional related sections not specifically listed below may apply.
   1. Section 43 05 11: General Requirements for Equipment

1.03 ADMINISTRATIVE REQUIREMENTS

A. Unit Responsibility
   1. Provide a completed, signed, and notarized Certificate of Unit Responsibility.

1.04 SUBMITTALS

A. Action Submittals
   1. Comply with procedures described in Section 01 33 00. Include the following as a minimum:
      a. Basin (Manhole Structure or Curb Inlet)
         1) Manufacturer.
         2) Type and model.
         3) Dimensions and weight.
         4) Wall thickness.
         5) Deflection.
         6) Materials.

7) Anchoring details and calculations.

b. Pumps
   1) Name of manufacturer.
   2) Type and model.
   3) Rotative speed.
   4) Size of discharge.
   5) Net weight of pump and motor only.
   6) Complete performance curves showing capacity versus head,
   7) BHP, NPSH required, and efficiency.
   8) Data on shop painting.

c. Motors
   1) Name of manufacturer.
   2) Type and model.
   3) Type of bearings and lubrication.
   4) Rated size of motor, hp.
   5) Temperature rating.
   6) Full load rotative speed.
   7) Net weight.
   8) Efficiency at full load and rated pump condition.
   9) Full load current.
   10) Locked rotor current.

d. Electrical / Control Panel and Component Name
   1) Name of manufacturer.
   2) Type and model.
   3) Dimensions and net weight of complete panel.
   4) Overcurrent characteristics and details of motor control.
   5) Liquid level sensors with mounting details and cable lengths, and pump controls.
   6) Power and control wiring diagram
   7) Schematic diagram
   8) Power and control panel dimension and layout drawings

2. Comply with requirements of Section 43 23 03. Sections to be marked-up and submitted in accordance with Section 43 23 03 requirements include:
   a. This section
   b. Section 40 92 00: Control Panels
   c. Section 43 05 11: General Requirements for Equipment
   d. Section 43 05 21: Common Motor Requirements for Equipment

B. Informational Submittals
   1. Comply with procedures described in Section 01 33 00.
   2. Comply with requirements of Section 43 23 03.

C. Closeout Submittals
   1. Comply with procedures described in Section 01 78 23.
   2. Provide submittals that conform to the requirements of Section 43 23 03.
   3. Spare Parts
      a. Comply with procedures described in Section 01 33 00.
      b. Provide the following spare parts:
         1) One set of all pump bearings
         2) One set of all pump gaskets
         3) One complete mechanical seal.
      c. Tag and store spare parts in accordance with provisions of Section 43 05 11.

1.05 DELIVERY, STORAGE, AND HANDLING

A. Comply with procedures described in Section 01 61 00.

1.06 PERFORMANCE/DESIGN CRITERIA

A. General
   1. The pump shall be designed to pump primary effluent, screened and degritted wastewater, stormwater as well as process drains from multiple wastewater and advanced water treatment processes. The pump shall operate without clogging or fouling caused by material in the pumped fluid at any operating condition within the range of service specified.
   2. The pump shall be designed to operate without cavitation, and the motor and pump combination shall operate without vibration over the specified range of conditions. The pump head capacity curve shall slope in one continuous curve with no point of reverse slope inflection.
   3. All components shall be designed to safely withstand forces resulting from flow reversals up to 125 percent of maximum speed within the pump during shutdowns caused by power failure.
   4. The complete pumping unit shall be designed to operate without overload on any component at any point along the pump's entire operating curve.

1.07 INSTALLATION

A. Pumps shall be installed in accordance with the manufacturer’s printed recommendations, and as shown on the Drawings.

1.08 MANUFACTURERS

A. One of the precast structure manufacturers listed below shall have unit responsibility for the system.
   1. Jensen Precast
   2. Old Castle
   3. or approved equal

B. Pump manufacturers shall be the following.
   1. BJM Pumps
   2. Grundfoss Pumps
   3. Or approved equal

PART 2 PRODUCTS

2.01 DESIGN REQUIREMENTS

A. Precast structures shall have the dimensions shown on the Drawings and shall have the features listed below:
   1. For the Plant Drain Pump Station (for Duplex Pumps P-240 and P-250)
      a. 6-ft inside diameter x 13.50 ft deep circular manhole structure with a double leaf access hatch as shown on Drawings.
      b. Provisions for accessing interior bottom of the structure.
      c. Predominantly concrete construction - could be precast to the extent possible.
   2. For the Stormwater Drain Pump Station (for Simplex Pump P-260)
      a. 6-ft x 8-ft x 14 ft deep rectangular curb inlet structure with a minimum 3 ft dia manhole cover with dimensions shown on the Drawings.
      b. Curb inlet to be screened with 316 stainless steel screen with 1-inch x 1-inch openings.
      c. Provisions for accessing interior bottom of the structure.
      d. Predominantly concrete construction - could be precast to the extent possible.

B. Pump shall be designed to meet the following design criteria.

Parameter	Pumps P-240 & P-250	Pump P-260
Pump Station Configuration	Lead / Lag	Lead
Pump Design Flow Rate, gpm	250	100
Design Head, ft	18	28
Operating Head Range, ft	12 to 20	16 to 30
Pump / Motor Power	460 V / 3 Ph / 60 Hz	460 V / 3 Ph / 60 Hz
Nominal motor power	3	2
Discharge Pipe diameter, inch	4	4

2.02 MATERIALS

A. General
   1. Materials specified are considered the minimum acceptable for the purposes of durability, strength, and resistance to erosion and corrosion. The Contractor may propose alternative materials to provide greater strength or meet required stress

limitations. However, alternative materials must provide at least the same qualities as those specified for the purpose.

2.03 BASIN

A. The package pumping stations shall be provided with basins to house the pumping units and float controls, a basin cover with access hatches for pump removal, and all associated piping fittings and appurtenances required for a complete installation. The basin shall be constructed of pre-cast concrete. The basin shall be as shown on the Drawings. Suitable means shall be provided for mounting the pumping unit, discharge base, guiderail system, piping, and controls to the basin.

2.04 PUMPING UNITS

A. The package pumping station shall be provided with pumping units as listed previously. All wetted parts of the pumps shall be made of stainless steel. Each pumping unit shall be guiderail-mounted, vertical, single- stage, submersible, non-clog, centrifugal type. Each pumping unit shall be complete with a close coupled, submersible electric motor; a floor-mounted discharge base and elbow; guiderails; access hatch cover; and all other appurtenances specified or otherwise required for proper operation

B. Each pump shall be provided with two mechanical rotating shaft seals arranged in tandem and running in an oil chamber. The lower seal unit between the pump and the oil chamber shall contain one stationary and one positively driven rotating silicon carbide ring. The upper seal unit between the oil chamber and the stator housing shall contain one stationary silicon carbide ring and one positively driven rotating carbon ring. Each interface shall be held in contact by an independent spring system designed to withstand maximum suction submergence. The seals shall require neither maintenance nor adjustment and shall be readily accessible for inspection and replacement.

C. Shaft seals lacking positively driven rotating members or conventional double mechanical seals which utilize a common single or double spring acting between the upper and lower units and requiring a pressure differential to offset external pressure and effect sealing, will not be acceptable. The seals shall not rely upon the pumped media for lubrication and shall not be damaged if the pumps are run unsubmerged for extended periods while pumping under load.

D. Each pumping unit shall be provided with an integral, self-aligning guiderail sliding bracket. The bracket shall be designed to obtain a wedging action between flange faces as final alignment of the pump occurs in the connected position. The bracket shall maintain proper contact and a suitably sealed connection between flange faces under all operating conditions.

E. Each pumping unit shall be equipped with one or more guiderails. Guiderails shall be sized to fit the discharge base and the sliding bracket and shall extend upwards from the discharge base to the top of the basin. An upper guiderail bracket of AISI Type 304 stainless steel shall be provided.

2.05 CONTROLS

A. The package pumping stations shall be furnished with a factory wired control system consisting of control panels, motor starters, control transformer, local power disconnect switch, overload relays, auxiliary relays, level switches, moisture and temperature detection package, and associated appurtenances specified herein or required for a properly operating system. See Drawings for required instrumentation.

B. Level Switches. Liquid level sensors consisting of an assembly of weighted ball floats with integral switches shall be furnished by the pump manufacturer. The sensors shall be suitable for duty/standby pump operation with high water alarm and shall be Weil "8230 Series". Each system of sensors shall be furnished complete with all required mounting brackets, weights, stainless steel mounting pipes and accessories, control power transformers, auxiliary relays, cables, and junction boxes.

C. Control Panel. The pumping units shall be controlled by a NEMA Type 4 duplex controllers which will sequence and alternate pump operation in response to the float switches for the duplex pump station and start and stop the simplex pump on level setpoints. The alternating of pumps should be selectable to provide duty/standby capability and toggling of the primary pump. Individual motor runtime indicators shall be supplied in the control panel. The control panel shall be pedestal-mounted above the package pump station. The high level switch alarm shall be wired to dry contact terminal blocks in the control panel to provide remote monitoring through the plant control system (PCS). Also, ‘Pump Running’ status and ‘Pumping System Failure’ alarm contacts shall be wired to dry contact terminal blocks in the control panel to provide remote monitoring. ‘Pump Running’ is active when either pump is running. ‘Pumping System Failure’ relates to any alarm condition or warning condition needing attention. The simplex pump station does not require any remote signals to PCS.

D. Sequence of Operation. Upon a rise in liquid level, a float switch will start the duty pump. Upon a rise in liquid level, a float switch shall energize the high water audible and visual alarms and activate the remote alarm. When the liquid level falls to the low float level, the duty pump shall be de-energized. The control system shall automatically alternate the duty and standby pumps. See Drawings for setpoints.

PART 3 EXECUTION

3.01 ALIGNMENT

A. Comply with procedures described in Section 43 05 14.

3.02 FIELD QUALITY CONTROL

A. Manufacturer Services
   1. On-Site Inspections and Training
      a. Provide a factory-trained manufacturer’s representative at the Site for the following activities. Specified durations do not include travel time to or from Site.

1) Installation inspections
   a) Assist, supervise, and inspect the Contractor's activities during installation.
   b) Provide 4 inspection hours.
   c) Provide a completed Form 43 05 11-A, Section 01 99 90.
2) System test phase inspections
   a) Assist, supervise, and inspect the Contractor's activities during the system test phase specified in Section 01 45 33.
   b) Provide 4 inspection hours.
3) Training sessions
   a) Comply with procedures described in Section 01 91 13.
   b) Provide a minimum of 2 hours classroom training for each training session.
   c) Conduct two training sessions, one training session per week on two consecutive weeks to accommodate the shift schedules of operation and maintenance staff.
   d) Certify completion of training on Form 43 05 11-B, Section 01 99 90.

3.03 SYSTEMS STARTUP

A. Comply with procedures described in Section 01 91 14.

END OF SECTION

THIS PAGE INTENTIONALLY LEFT BLANK

SECTION 43 40 04

WELDED STEEL TANKS

PART 1 – GENERAL

1.01 THE SUMMARY

A. General: The Wastewater System Supplier (WWSS) shall provide welded steel tanks, complete and operable, in accordance with the Contract Documents. The steel tank design for the Biological Nutrient Removal (BNR) System shall have the following provisions as shown on drawings M-06 through M-08.

1. Stairway with landings and handrails
2. Aluminum or FRP grated walkway and guardrails on top of tank
3. Baffle walls
4. WAS Box
5. Corner Baffle
6. Supporting structures for tank equipment (mixers, weir gates, diffusers, hose bib, etc.)
7. Support mechanism (brackets) for adjacent piping

1.02 REFERENCE SPECIFICATIONS, CODES, AND STANDARDS

AWWA D100	Welded Steel Tanks for Water Storage
API 620	Recommended Rules for Design and Construction of Large, Welded, Low-Pressure Storage Tanks
API 650	Welded Steel Tanks for Oil Storage
ASME	Boiler and Pressure Vessel Code
ASTM A 36	Structural Steel
ASTM A 131	Structural Steel for Ships
NFPA 30	Flammable and Combustible Liquids Code
SSPC-SP 5	White Metal Blast Cleaning
SSPC-SP 6	Commercial Blast Cleaning

1.03 SUBMITTALS

A. Furnish submittals in accordance with Section 01 33 00 - Submittals.

1. Copy of this Section, with each paragraph check-marked to indicate specification compliance or marked to indicate requested deviations from specification requirements.

2. Check-marks (✓) to denote full compliance with a paragraph as a whole. Underline deviations and denote by a number in the margin to the right of the identified paragraph. The remaining portions of the paragraph not underlined will signify compliance. Include a detailed, written justification for each deviation.

3. Failure to include a copy of the marked-up specification sections with justification(s) for any requested deviation will cause rejection of the entire submittal with no further consideration.

B. Shop Drawings: Manufacturer's information for each tank and its accessories.

PART 2 – PRODUCTS

2.01 GENERAL

A. Materials: Materials that are not indicated to be coated shall be fabricated from materials as indicated. Where materials are not indicated, the WWSS shall provide corrosion-resistant materials suitable for long-term service.

Service	Item	Material
Blend of Primary Influent/Primary Effluent, Mixed Liquor	Tank lining	Epoxy, per Section 09 90 00 – Protective Coating
	Flange nuts, bolts	Galvanized steel
	Submerged, wetted, or internal items	Type 316 stainless steel

B. Nameplates and Code Stamps: Each tank shall bear a stainless steel nameplate which contains the design and fabrication information required by the reference standard. Each nameplate shall bear the applicable code symbol.

C. Fabricators: Tanks shall be fabricated by fabricators authorized to apply the applicable code symbols.

D. In assembly and during welding, the component parts shall be adequately clamped, supported, and restrained to minimize distortion and for control of dimensions. Weld reinforcement shall be as specified by the reference standards, and excessive reinforcement shall be ground down to within the requirements, and as required to install the lining systems. Upon completion of welding, weld splatter, flux, slag, and

burrs left by attachments shall be removed. Welds shall be ground to produce a satisfactory appearance, with uniform contours and dimensions. External corners and edges shall be ground to a 1/16-inch radius. Internal corners and edges shall be ground to a 1/8-inch radius, or a greater radius if required by the lining system.

E. Flat bottom tanks shall have butt-welded bottoms, with a steel thickness of at least 3/8-inch.

F. Openings 4-inches and greater in nominal diameter shall be reinforced.

G. Tank shell joints shall have complete joint penetration and fusion and shall be welded from both sides. Before the second side is welded the joint shall be arc-gouged to sound metal.

H. For flat bottom tanks, the corner joint shall be tested after the inside fillet weld is complete by applying a weld-compatible penetrating oil to the outside of the joint and observing the inside fillet weld for indications of oil penetration.

I. Shell attachments for pipe supports, tank gauges, instruments, and other items shall be welded to the tank shell before application of the tank lining.

J. After fabrication but prior to application of linings, each tank shall be tested in accordance with the reference standards.

K. Unless otherwise indicated, the minimum thickness for steel plates used for shells, roofs, or heads shall be 1/4-inch.

L. Tank details shall be designed to eliminate unwelded joints that promote corrosion pockets and accumulate rainwater or chemicals, and attachments to the shell which result in excessive localized stresses due to welding supports or imposed loads.

M. Access openings shall be flanged, and, unless otherwise indicated, have a nominal diameter of at least 24-inches. The cover plate and flange shall each have a net thickness after machining of at least 1/2-inch.

N. Fittings shall be flanged.

O. Welding seams shall be located to clear all nozzle openings. All flange faces shall be true to the center line of the nozzles, and bolt holes shall straddle center lines unless noted elsewhere.

P. Flanged Nozzles:

1. Nozzles for connecting piping and accessories shall be provided on each tank at the locations and of the sizes indicated in the drawings.

2. Nozzles shall be flanged, with flange diameter and drilling conforming to ASME B16.5, Class 150. Tank nozzles shall extend at least 4 inches from outside of face of tank to the face of the flange. Flanged nozzles shall be fabricated of the same material as the tank.

3. Nozzles for drain connections shall be installed so the invert is flush with the bottom of the tank to allow complete draining of the tank.

Q. Tanks shall be designed to resist a horizontal force equal to at least 50 percent of the total weight of the tank plus contents and a vertical force equal to at least 25 percent of the total weight of tank plus contents.

R. Anchor bolts shall have a nominal diameter of at least one-inch, unless otherwise indicated, and shall be anchored into concrete foundations using methods designed to transfer the full ultimate strength of the anchor bolt to the concrete foundation. Anchor bolts shall be attached to the tank by use of anchor bolt chairs or rings, as required, and such chairs or rings shall be designed to transfer the full ultimate strength of the bolt, or 150 percent of the calculated load, whichever is less, to the tank shell.

S. Buried and Exposed Surfaces: Unless otherwise indicated, coat in conformance with Section 09 90 00 – Protective Coating.

T. Pressure Rating: Unless otherwise indicated, unfired pressure tanks shall be fabricated in accordance with the ASME code for unfired pressure vessels, for a pressure rating of at least 50 percent above the maximum expected operating pressure.

U. Manufacturers: Tanks shall be fabricated by reputable manufacturers, experienced in the design and fabrication of the specific tanks, familiar with applicable local regulations, codes, fire and safety orders, and having a record of successful installations.

V. Baffle walls to have 2-inch diameter hole centered at the bottom of the wall to allow future draining from zones.

PART 3 – **EXECUTION**

3.01 GENERAL

A. Installation: The Contractor shall install welded steel tanks and appurtenances in accordance with the Shop Drawings, applicable codes, and the Contract Documents.

END OF SECTION

SECTION 43 41 48
POLYETHYLENE TANKS

PART 1 GENERAL

1.01 DESCRIPTION

A. Scope:
1. This section specifies polyethylene plastic tanks for Sodium Hypochlorite, Ammonium Sulfate, Sodium Hydroxide, Citric Acid, Sodium Bisulfite, and Acetic Acid, Preformed Chloramines Carrier Water, MBR Filtrate, Pathogen Test, Blended Water Storage Tanks, and other process tanks as listed.
2. The Tank Supplier shall furnish a complete tank including all accessories as intended by these specifications and as shown on the Drawings. The Contractor shall be responsible for inspection upon delivery, coordinating any required repairs, final exterior coating, and installation per Supplier's recommendations and requirements of this section.
3. This section includes specifications for high-density crosslinked polyethylene (XLPE) and high-density linear polyethylene (HDPE).
4. All chemical storage tanks shall be double-walled.
5. Nozzle schedules are included on Drawings.

B. Type: The polyethylene tanks shall be vertical, complete with piping outlets, drains, overflows, and anchoring system. Covered tanks shall be vented, and where specified, tanks shall be provided with entrance manways, level indicators, and other accessories as shown on the Drawings.

C. Equipment List:

Item	Equipment Number
Sodium Hypochlorite Storage Tank	TNK-1400
Ammonium Sulfate Storage Tank	TNK-1320
Sodium Hydroxide Storage Tank	TNK-1600
Citric Acid Storage Tank	TNK-1540
Sodium Bisulfite Storage Tank	TNK-1500
Acetic Acid Storage Tank	TNK-1300
Blended Water Storage Tank	TNK-340
MBR Filtrate Tank No 1	TNK-550
MBR Filtrate Tank No 2	TNK-560
Pathogen Test Tank No 1	TNK-610
Pathogen Test Tank No 2	TNK-620
O3 Product Tank	TNK-740
BAC Filtrate Tank	TNK-820
BAC Filtrate Overflow Tank	TNK-830

Item	Equipment Number
BAC Backwash Supply Tank	TNK-850
RO Feed Tank	TNK1000
CCRO Permeate Tank	TNK-1030
RO CIP Tank	TNK-1060
RO Flush Tank	TNK-1075
PFC Carrier Water Tank	TNK-1200
Sulfuric Acid Storage Tank	TNK-1440

D. Performance and Design Requirements

1. The tank furnished under this section shall have the following characteristics and the detail specification of each tank is listed at the end of this specification section.

Equipment Number(s):	TNK-1400	TNK-1320	TNK-1600	TNK-1540	TNK-1500	TNK-1300	TNK-340
Physical Characteristic	Vertical, Cylindrical	Vertical, Cylindrical	Vertical, Cylindrical	Vertical, Cylindrical	Vertical, Cylindrical	Vertical, Cylindrical	Vertical, Cylindrical
Tank Material	HDPE or XLPE with internal oxidation resistant coating	XLPE	XLPE	XLPE	XLPE	XLPE	HDPE
Fitting Material	PVC	PVC	PVC	PVC	PVC	PVC or PP	PVC
Gasket Material	Viton	EPDM	EPDM	EPDM	EPDM	EPDM	EPDM
Bolt Material	Titanium	316SS, Hastelloy c-276, or Titanium	316SS	316SS	316SS	316SS	316SS
Nominal capacity, gallons	750	160	1550	105	105	1,000	6,600
Inside diameter, feet	4’-6”	2’ 7 ¾”	7’-2”	2’-7 ¾”	2’-7 ¾”	5’-9 ½”	10’
Straight shell height	6’-7”	4’-3”	5’-4 ½”	2’-10 ½”	2’-10 ½”	5’-3”	11’-6”
Access hatches, number	1	1	1	1	1	1	1
Black Tank	No	No	No	No	No	No	No
Fluid	12.5% Sodium Hypochlorite	40% Liquid Ammonium Sulfate	25% Sodium Hydroxide	50% Citric Acid	38% Sodium Bisulfite	56% Acetic Acid	Screened, and degritted sewage
Design specific gravity	1.05	1.22	1.28	1.24	1.14	1.25	1
Double Wall Containment	Yes	Yes	Yes	Yes	Yes	Yes	No

Equipment Number(s):	TNK-1400	TNK-1320	TNK-1600	TNK-1540	TNK-1500	TNK-1300	TNK-340
Safety Ladder	No	No	No	No	No	No	Yes

Equipment Number(s):	TNK-550	TNK-560	TNK-610	TNK-620	TNK-740	TNK-820	TNK-830
Physical Characteristic	Vertical, Cylindrical	Vertical, Cylindrical	Vertical, Cylindrical	Vertical, Cylindrical	Vertical, Cylindrical	Vertical, Cylindrical	Vertical, Cylindrical
Tank Material	HDPE	HDPE	HDPE	HDPE	HDPE	HDPE	HDPE
Fitting Material	PVC	PVC	PVC	PVC	PVC	PVC	PVC
Gasket Material	EPDM	EPDM	EPDM	EPDM	Viton	EPDM	EPDM
Bolt Material	316SS	316SS	316SS	316SS	316SS	316SS	316SS
Nominal capacity, gallons	12,500	12,500	3,500	1,000	1,000	2,000	1,000
Inside diameter, feet	11’ 10”	11’ 10”	7’ 6”	5’ 0”	6’	7’-6”	6’
Straight shell height	14’ 1”	14’ 1”	11’ 0”	7’ 3”	5’-5”	6’-9”	5’-5”
Access hatches, number	1	1	1	1	1	1	1
Black Tank	Yes	Yes	Yes	Yes	Yes	Yes	Yes
Fluid	MBR Filtrate	MBR Filtrate	MBR Filtrate	MBR Filtrate	O3 product	BAC Filtrate	BAC Filtrate
Design specific gravity	1	1	1	1	1	1	1
Double Wall Containment	No	No	No	No	No	No	No

Equipment Number(s):	TNK-850	TNK-1000	TNK-1030	TNK-1060	TNK-1075	TNK-1200	TNK-1200
Physical Characteristic	Vertical, Cylindrical	Vertical, Cylindrical	Vertical, Cylindrical	Vertical, Cylindrical	Vertical, Cylindrical	Vertical, Cylindrical	Vertical, Cylindrical
Tank Material	HDPE	HDPE	HDPE	HDPE	HDPE	HDPE	HDPE or XLPE with internal oxidation resistant coating
Fitting Material	PVC	PVC	PVC	PVC	PVC	PVC	CPVC or PVDF
Gasket Material	EPDM	EPDM	EPDM	EPDM	EPDM	EPDM	Viton
Bolt Material	316SS	316SS	316SS	316SS	316SS	316SS	Hastelloy C-276
Nominal capacity, gallons	6,000	2,500	500	500	1,500	55	405

Equipment Number(s):	TNK-850	TNK-1000	TNK-1030	TNK-1060	TNK-1075	TNK-1200	TNK-1200
Inside diameter, feet	8’-6”	7’-6”	4’	4’	6’	2’	3’-8”’
Straight shell height	12’-8”	8’-6”	6’	7’	7’-8”	2’-11”	5’-2”
Access hatches, number	1	1	1	1	1	1	1
Black Tank	Yes	Yes	Yes	No	Yes	Yes	No
Fluid	BAC Filtrate	MF Filtrate	RO Permeate	RO Permeate with 2% Citric Acid or 0.1% Sodium Hydroxide	RO Permeate	RO Permeate	93% Sulfuric Acid
Design specific gravity	1	1	1	1	1	1	1.84
Double Wall Containment	No	No	No	No	No	No	Yes

2. The tank shall be designed for atmospheric pressure.
3. All plastic tanks shall be manufactured of material suitable for the chemicals they serve and shall be certified for such use on the shop drawings. Tanks shall be designed and checked for all loads to be incurred during service, including, but not limited to, wind, temperature stress and earthquake loads by a registered (California) engineer experienced in XLPE and HDPE tanks. All designs and calculations shall be signed by the registered engineer and submitted to the City for approval.
4. The manufacturer shall have been regularly engaged in the design and manufacture of XLPE and HDPE tanks such as specified herein. The tank manufacturer’s experience shall include equal or larger capacity tanks than specified herein, that have been in operation. Manufacturer shall submit references where the equipment has been used to store the specified chemicals.
5. The tank shall be warranted for three (3) year to be free of defects in material and workmanship. The tank shall be warranted for three (3) year for the storage of the specified chemical.

1.02 RELATED WORK SPECIFIED ELSEWHERE

A. The Work of the following Sections applies to the WORK of this Section. Other Sections of the Specifications, not referenced below, shall also apply to the extent required for proper performance of this Work.

B. Section 43 05 11 General Requirements for Equipment.

1.03 REFERENCE SPECIFICATIONS, CODES AND STANDARDS

A. Comply with the reference specifications of the General Requirements.

B. Comply with the current provisions of the following codes and standards.
   1. Commercial Standards

a. ANSI/NFPA 70 National Electrical Code
b. ASTM D 256 Test Methods for Impact Resistance of Plastics and Electrical Insulating Materials.
c. ASTM D 638 Test Method for Tensile Properties of Plastics.
d. ASTM D 695 Test Method for Compressive Properties of Rigid Plastics.
e. ASTM D 747 Test Method for Apparent Bending Modules of Plastics by means of Cantilever Beam.
f. ASTM D 790 Test Methods for Flexural Properties of Unreinforced and Reinforced Plastics and Electrical Insulating Materials.
g. ASTM D 792Test Methods for Specific Gravity and Density of Plastics by Displacement.
h. ASTM D 883 Definitions of Terms Relating to Plastics.
i. ASTM D 2583 Test Method for Indentation Hardness of Rigid Plastics by Means of a Barcol Impressor.
j. ASTM D 1998 Standard Specification for Polyethylene Upright Storage Tanks (Type I Tanks).
k. ASTM D 746 Test Method for Brittleness Temperature of Plastics and Elastomers by Impact.
l. ASTM D 1505 Test Method for Density of Plastics by the Density-Gradient Technique.
m. ASTM D 1525 Test Method for Vicat Softening Temperature of Plastics.
n. ASTM D 1693 Test Method for Environmental Stress-Cracking of Ethylene Plastics.

2. When two or more of the above regulations are applicable, the more stringent requirement shall be met.

1.04 CONTRACTOR SUBMITTALS

A. Submittals shall be made in accordance with the Section 01 33 00.

B. Shop Drawings: The Subcontractor shall furnish shop drawings of all items and accessories in accordance with the General Requirements.

C. Data Requirements: The drawings and data submitted shall include the following:
1. Dimensions including anchor bolt layouts.
2. Nozzle schedule including size, mark, thickness, and rating.
3. Details of structural support members.
4. Equipment capacity (gallons).
5. Design specific gravity
6. Wall thickness calculations.
7. Seismic calculations for a seismic zone 4 and 100 mph wind restraint system in accordance with the current Uniform Building Code.
8. Chemical resistance data.

1.05 QUALITY ASSURANCE

A. Quality Assurance shall be in accordance with Section 43 05 11, “Equipment General Provisions.”

PART 2 PRODUCTS

2.01 HIGH DENSITY CROSSLINKED POLYETHYLENE TANKS

A. Standards: Construction of tanks shall be in accordance with ASTM standards listed herein.

B. Design: The tanks shall be rotationally molded of High-Density Crosslinked Polyethylene (XLPE) and shall be ribbed for extra strength. The XLPE resin shall contain 1/2 to 1 percent ultraviolet stabilizer. Where black tanks are specified, the XLPE resin shall contain 1/2 to 1 percent carbon black as blended by the XLPE resin manufacturer. The tanks shall have a domed top. If the sulfuric acid tank (TNK-1200) or sodium hypochlorite tank (TNK-1400) are provided as XLPE, the tanks shall be furnished with an internal oxidant-resistant coating (OR-1000 or equivalent). The tanks shall be able to operate at ambient temperatures of 40°F – 120°F in the outdoors without deformation or degradation. Double-walled tanks shall be designed to provide a minimum of 110% of the normal fill capacity of the primary tank as secondary containment. The XLPE resin properties shall meet or exceed the following:

PROPERTY	ASTM TEST	VALUE
Density (gm/cc)	D 1505	0.937-0.944
Tensile Strength Ultimate, 2”/min (psi)	D 638	2600
Elongation at Break, 2”/min (%)	D 638	400
ESCR, Condition A, F50, (hrs)	D 1693	> 1000
Vicat Softening Temperature (deg F)	D 746	230
Brittleness Temperature (deg F)	D 746	< 180
Flexural Modulus (psi)	D 790	100,000

C. Connections: Tank connections shall be installed by manufactured per size and type as specified in the drawings. Refer to the tank drawings and nozzle details for tank connections size and location. All connection larger than 2-inches shall be flanged. Contractor shall coordinate with tank manufacturer to provide notch out on tank pad as required for IMFO tank drains.

D. Refer to drawings for nozzle details.

2.02 HIGH DENSITY LINEAR POLYETHYLENE TANKS

A. Standards: Construction of tanks shall be in accordance with ASTM standards listed herein.

B. Design: The tanks shall be molded of Type II High-Density Linear Polyethylene (HDPE). The HDPE resin shall contain ultraviolet stabilizer as recommended by the resin manufacturer. Where black tanks are specified, the resin shall contain carbon black

compounded into the tank by the resin manufacturer. The tanks shall have a domed top. The tanks shall be able to operate at ambient temperatures of 40°F – 120°F in the outdoors without deformation or degradation. Double-walled tanks shall be designed to provide a minimum of 110% of the normal fill capacity of the primary tank as secondary containment. The HDPE resin properties shall meet or exceed the following:

PROPERTY	ASTM TEST	VALUE
Density (gm/cc)	D 1505	0.940-0.950
Tensile Strength Ultimate, 2”/min (psi)	D 638	2700
Elongation at Break, 2”/min (%)	D 638	350
ESCR, Condition A, F50, (hrs)	D 1693	200 - 500
Vicat Softening Temperature (deg F)	D 746	235
Flexural Modulus (psi)	D 790	97,000 – 103,000

C. Connections: Tank connections shall be installed by manufactured per size and type as specified in the drawings. Refer to the tank drawings and nozzle details for tank connections size and location. All connection larger than 2-inches shall be flanged. Contractor shall coordinate with tank manufacturer to provide notch out on tank pad as required for tank drains.

1. On the ozone product tank (TNK-740), the Contractor shall provide a 90 degree dropleg on the inlet of the tank overflow to restrict ozone in the headspace of the tank from passively venting through the overflow. The dropleg shall extend to a maximum of 1 foot above the tank floor.

D. Refer to drawings for nozzle details.

2.03 BOLTS, ANCHOR BOLTS, WASHERS, SUPPORTS, AND HOLD DOWN LUGS

A. The Contractor shall provide all bolts, anchor bolts, nuts, washers, and supports as required for all the plastic tanks specified in this Section, and in accordance with the requirements of the manufacturers of the plastic tanks. All bolts, anchor bolts, washers, in connection with this Section shall be of hastelloy-C or other materials compatible with the chemicals. The lateral tank restraint system shall be designed to meet requirements of Division 01. Restraint system components shall be hastelloy-C, except cables which shall be stainless steel Type 316.

2.04 MANUFACTURERS:

A. Poly Processing
B. Assmann
C. Snyder Industries, Inc.
D. Or approved equal.

PART 3 EXECUTION

3.01 INSTALLATION

A. All HDPE and XLPE tanks shall be installed in accordance with manufacturer instructions. All pipes and equipment connecting to the tanks shall be firmly supported, to prevent stresses on the tank.

3.02 FIELD INSPECTION

A. The field inspection shall include the following:

1. A hydrotest of at least 24 hours shall be performed. The tank shall be filled with water to the overflow level and be observed for leaks. If leaks are observed, the tank shall be repaired or replaced at the Engineer's discretion at no cost to the City.

END OF SECTION

SECTION 46 07 10
CHEMICAL SYSTEMS

PART 1 GENERAL

1.01 SUMMARY

A. This Section specifies the supply, installation, testing, and commissioning of chemical systems. The chemical systems shall be suitable for storage, metering, and injection of the respective chemicals.

B. The following chemical systems are covered by this specification:
   1. Sodium hydroxide systems
      a. NaOH Preformed Chloramine MBR Filtrate Feed
      b. NaOH Preformed Chloramine Murray MF Feed
      c. NaOH Preformed Chloramine San Vicente RO Feed
      d. NaOH BNR Aerobic Feed
      e. NaOH Citric Acid Neutralization Transfer
      f. NaOH RO CIP Transfer
   2. Sodium hypochlorite systems
      a. NaOCl Preformed Chloramine MBR Filtrate Feed
      b. NaOCl Preformed Chloramine Murray MF Feed
      c. NaOCl Preformed Chloramine San Vicente RO Feed
      d. NaOCl Murray UV/AOP Feed
      e. NaOCl San Vicente UV/AOP Feed
      f. NaOCl MF EFM/TMC & CIP Transfer
      g. NaOCl MBR MC & CIP Transfer
   3. Liquid ammonium sulfate systems
      a. LAS Preformed Chloramine MBR Filtrate Feed
      b. LAS Preformed Chloramine Murray MF Feed
      c. LAS Preformed Chloramine San Vicente RO Feed
      d. LAS Murray MF UV/AOP Feed
      e. LAS San Vicente UV/AOP Feed
   4. Sulfuric acid system
      a. SAC San Vicente RO Feed
      b. SAC Murray RO Feed
      c. SAC Murray CRRO Feed
      d. SAC Murray FFRO Feed
   5. Antiscalant systems
      a. AS San Vicente RO Feed
      b. AS Murray RO Feed
      c. AS Murray CCRO Feed

   d. AS Murray FFRO Feed
6. Citric acid systems
   a. CAC MF CIP & RO CIP Transfer
   b. CAC MBR CIP Transfer
7. Sodium Bisulfite
   a. SBS Ozone Influent Feed
   b. SBS Ozone Effluent Feed
   c. SBS MF Cleaning / RO Flush Neutralization Transfer
8. Acetic Acid
   a. ACOH BNR Feed

C. Limitations: The chemical storage tanks, equipment, pump skids, and other accessories of the chemical systems shall be suitable for installation within the space allocated for each system. Where systems are delineated herein to be the responsibility of a particular Subcontractor/Supplier, that Subcontractor/Supplier is responsible for confirming design criteria, selection, and arrangement of appurtenances such that the system functions as needed to support the process equipment provided by the Subcontractor/Supplier.

1.02 REFERENCES

A. Comply with applicable provisions and recommendations of the latest edition of the following, except as otherwise shown or specified:

Reference	Title
ASME A13.1	Scheme for the Identification of Piping Systems
ASME B16.1	Gray Iron Pipe Flanges and Flanged Fittings Classes 25, 125, and 250
ASME B16.5	Pipe Flanges and Flanged Fittings NPS ½ Through NPS 24 Metric/Inch Standard
ASTM D1785	Standard Specification for Poly(Vinyl Chloride) (PVC), Plastic Pipe, Schedules 40, 80, and 120
ASTM D3299	Filament-Wound Glass-Fiber-Reinforced Thermoset Resin Corrosion-Resistant Tanks
ASTM D5421	Contact Molded "Fiberglass" (Glass-Fiber-Reinforced Thermosetting Resin) Flanges
ASTM F441/441M	Standard Specification for Chlorinated Polyvinyl Chloride (CPVC) Plastic Pipe, Schedules 40 and 80
AWWA B300	Hypochlorites
AWWA B302	Ammonium Sulfate
AWWA B501	Sodium Hydroxide (Caustic Soda)
HI 7.1 to 7.5	Controlled Volume Metering Pumps
HI 9.1 to 9.5	Pumps - General Guidelines for Types, Applications, Definitions, Sound Measurements and Documentation

1.03 RELATED SECTIONS

A. This section contains specific references to the following related sections. Additional related sections may apply that are not specifically listed below (all applicable Division 1 specifications are applicable).
   1. Section 01 33 00 –Submittal Procedures
   2. Section 01 45 16.13 – Contractor Quality Control
   3. Section 01 61 00 – Common Product Requirements
   4. Section 01 78 23 – Operations and Maintenance Data
   5. Section 01 88 15- Anchorage and Bracing
   6. Section 05 05 20 Anchor Bolts
   7. Section 43 05 11 General Requirements for Equipment
   8. Section 43 05 21 Common Motor Requirements for Equipment
   9. Section 40 05 31 Thermoplastic Process Pipe
   10. Section 40 05 31.53 PVDF Pipe
   11. Section 40 05 63.06 Ball Valves – PVC
   12. Section 40 05 63.08 Ball Valves – Stainless Steel Flanged
   13. Section 40 05 63.53 Ball Valves - PVDF
   14. Section 40 93 00 Plant Control Philosophy
   15. Section 46 33 42.16 Hydraulically Driven Diaphragm Pumps
   16. Section 46 33 44 Peristaltic Metering Pumps

1.04 UNIT RESPONSIBILITY:

A. The Subcontractor/Supplier(s) of the Packaged Chemical Systems provided under this section shall assume unit responsibility, as specified in section 43 05 11. This supplier has unit responsibility for both the equipment assembly specified in this section and all other equipment assembly components specified elsewhere but referenced in this section. A completed, signed certificate of unit responsibility (Section 01 99 90 - form 43 05 11-C) shall be provided.

1.05 SUBMITTALS

A. The following information shall be provided in accordance with Section 01 33 00.
   1. A copy of this specification section, with addendum updates included, and all referenced and applicable sections, with each paragraph check-marked to indicate specification compliance or marked to indicate requested deviations from specification requirements. Check marks (√) shall denote full compliance with a paragraph as a whole. If deviations from the specifications are indicated and therefore requested by the Subcontractor, underline each deviation and denote by a number in the margin to the right of the identified paragraph. The Engineer shall be the final authority for determining acceptability of requested deviations. The remaining portions of the paragraph not underlined will signify compliance with the specifications. Provide a detailed, written justification for each deviation.

B. A copy of the contract document process and instrumentation drawings (P&ID) relating to the submitted equipment, with addendum updates that apply to the equipment in this section, marked to show specific changes necessary for the equipment proposed in the submittal.

   If no changes are required, the drawing or drawings shall be marked "no changes required."

C. Shop Drawings:
   1. illustration, specification, and engineering data on all components of the system.
   2. Drawings showing assembly, accessories, and installation details.
   3. Setting drawings, templates, and direction for the installation of anchor bolts and other anchorages.
   4. Deviations from Contract Documents.
   5. Drawings and design calculations, as applicable.

D. Calculations:
   1. The pump skid supplier shall submit structural calculations (including anchorage) for the pump skid sealed and signed by a California registered Professional Engineer.

E. The chemical system supplier shall submit a certificate of compatibility for all materials that will come in contact with the chemicals being handled.

F. Provide report on all shop testing performed prior to shipment.

G. Field Test Results:
   1. Written report giving the results of the field tests required herein or as part of the installation and start-up.

H. Certifications:
   1. Supplier’s Instructions Certification Form 43 05 11-A.
   2. Supplier’s Installation Certification Form 43 05 11-B.

I. Operation and Maintenance Manuals:
   1. Submit complete installation, operation and maintenance manuals, maintenance data and schedule, descriptions of operations, and spare parts information in accordance with Section 01 78 23.

J. Installation Procedures:
   1. General installation procedures. Include weights of all major assemblies and sub-assemblies.

1.06 QUALITY CONTROL

A. Supplier’s Qualifications:

1. The suppliers shall be qualified and experienced in the design, construction, installation, and operation of equipment for the purpose required and shall regularly produce such systems. Suppliers shall have verifiable experience in the production of substantially similar equipment and shall show evidence of satisfactory operation when requested.
2. See Section 01 45 33 for additional inspection requirements.

1.07 SHIPMENT AND STORAGE

A. The equipment shall be protected during shipment as specified in Section 01 61 00.

B. Ship equipment, material, and spare parts (where specified or required) complete except where partial disassembly is required by transportation regulations or for protection of components.

C. Pack spare parts in containers bearing labels clearly designating contents and pieces of equipment for which intended.

D. Provide short-term and long-term storage requirements to the Contractor.

1.08 ENVIRONMENTAL CONDITIONS

A. The units specified in this section shall be designed for outdoor installation. Part of the equipment (mostly pumps) will be provided with a canopy cover as shown on the Drawings.

PART 2 PRODUCTS

2.01 GENERAL CONFIGURATION

A. General:
   1. Each of the chemical systems will consist of the following:
      a. Fill stations with control panels.
      b. Fill lines from chemical trucks to the storage tanks(s)
      c. Storage tank(s) or drum(s)
      d. Metering pump skids
      e. Chemical injectors
      f. All piping, valves, instruments, and other accessories such as pressure relief valves, back pressure valves, check valves, pulsation dampeners, calibration columns, pressure gauges, and pressure switches.
      g. Storage tanks and metering pumps are specified separately and referenced herein. The metering pumps complete with the interconnecting piping, valves, instruments, and accessories shall be supplied as a complete skid as shown on the Drawings for each chemical system.

B. Chemical Tote System: Antiscalant shall be stored in vendor-provided drums, as indicated on the Drawings.

1. Chemical resistant polyethylene drum.
2. Size: 55 gallons.
3. Placed on spill containment pallet.
4. Temperature: - 78 to 150 degrees Fahrenheit
5. BPA Free.
6. FDA compliant.
7. UV inhibitor

C. Spill Containment Pallets
1. Spill containment pallets shall be provided for the following chemical systems, as indicated in the Drawings:
   a. Antiscalant storage drum
      1) Spill containment shall be constructed of polyethylene and have a minimum storage capacity of 60 gallons. The containment shall be equipped with a drain and meet the standards listed under EPA 40 CFR 264.175
      2) Eagle Model 1634 or approved equal
   b. Antiscalant metering pumps
      1) Spill containment shall be constructed of high-density polyethylene and have a minimum storage capacity of 385 gallons. The containment shall be equipped with a drain and meet the standards listed under EPA 40 CFR 264.175
      2) ENPAC model 5482-YE-D or approved equal
   c. Sulfuric acid metering pumps
      1) Spill containment shall be constructed of high-density polyethylene and have a minimum storage capacity of 385 gallons. The containment shall be equipped with a drain and meet the standards listed under EPA 40 CFR 264.175
      2) ENPAC model 5482-YE-D or approved equal

D. Basket Strainers: Provide basket type strainers as indicated on the Drawings.
1. PVC Basket strainers for chemical service:
   a. Simplex as indicated on the Drawings; baskets and bodies PVC; gaskets Viton or as required for the chemical service; basket mesh size to be specified by the Engineer during shop drawing review.
   b. Connections:
      1) Liquid Ends: Flanged
      2) Cover: Quick opening with retaining clamp and gasket. Threaded covers are prohibited
   c. Manufacturer: Spears or approved equal.

E. Dessicant Dryers:
1. The sulfuric acid tank shall be furnished with a desiccant dryer for installation on the tank vent line. The vent desiccant dryer shall have a maximum diameter of 16 inches and must be able to remove a minimum of 7.5 pounds of water before the

desiccant resin is spent. The dryer shall be supported by a stainless steel framework mounted at grade or on the containment berm/wall to facilitate inspection and replacement of the desiccant. The unit shall be provided with an observation port to permit visual determination of desiccant exhaustion. The vent dryer manufacturer shall supply 200 pounds of desiccant resin in an airtight container suitable for long term storage of the resin. The dryer shall be Model No. 1200 as manufactured by W.A. Hammond Drierite Company or approved equal.

F. Fume Scrubber:
   1. The acetic acid tank shall be furnished with a vent fume scrubber installed at the end of the tank vent line. The vent fume scrubber tank shall be located within the chemical containment area and mounted to foundation slab. The unit shall be provided with solution for acetic acid fumes, with pH monitoring. The vent fume scrubber shall be Model VentMaster 155 manufactured by CRP Tank Specialties, Inc or approved equal.

G. Chemical Tank and Tote Discharge Connection Expansion Joints:
   1. Provide a custom flexible connection for each chemical tank and tote discharge connection. The flexible connection shall be manufactured by Red Valve or approved equal. The flexible connection shall be Redflex Rubber Pipe or approved equal consisting of all nonmetallic materials: EPDM with convoluted PTFE liner.

H. Metering Pump Skid Requirements:
   1. Provide single, duplex, triplex, or quadplex pump systems for the systems described below. Each system shall be constructed of lightweight, permanently welded 6060 T6 aluminum with acidic liquid iron phosphate three stage clean and coat pre-treatment and exterior grade corrosion resistant polyester polyurethane powder coat. Alternately skids may be fabricated of HDPE or FRP structural and molded shapes.
   2. Each skid shall have the dimensions to provide access to each metering pump and specified accessories on each skid.
   3. The skids shall be mechanically and electrically complete, requiring only the connection of electrical power, signal wiring, and inlet and outlet process chemical connections.
   4. There shall be two side walls, a pump mounting base, and two rear back plates. Each of the two side walls shall be provided with nine service access cutouts and two accessory mounting slots.
   5. Four 316 stainless steel skid mounting pads shall be provided which can be positioned to enable either floor mounting or wall mounting the skid. Each mounting pad shall be secured to two mounting holes in the skid structure by 18-8 stainless steel hardware.
   6. Two 316 stainless steel pump mounting brackets with four mounting slots shall be provided. Pump mounting brackets shall be secured to the skid structure by 18-8 stainless steel hardware.
   7. Custom engineered universal mounting brackets shall secure each of the valves to the skid structure. Valve mounting brackets shall be PVC. Valve mounting

brackets shall be secured to pre-cut slots in the skid structure by 18-8 stainless steel hardware.

8. A polypropylene drip tray shall be provided for each pump.
9. Piping shall be as specified by system below.
10. Valves shall be as specified by system below.
11. Unions shall match piping system.
12. Seals shall match piping system or as specified by system below.
13. Two chemical interface ports shall be provided one suction and one discharge. The configuration of connections shall be as specified by system below.
14. System shall have a two-year manufacturer's warranty.
15. The skid systems may be the product of the chemical pump manufacturer or manufacturer's approved representative.

2.02 SODIUM HYDROXIDE SYSTEM

A. Sodium hydroxide system consists of the following:

Item	Details	Remarks
Chemical detail	25% sodium hydroxide (NAOH)	
Storage Tanks	1 x 1550 gallons XLPE Tank	See Section 43 41 48 for details
NaOH Preformed Chloramine MBR Filtrate Feed Pump, Murray MF Feed Pump, and San Vicente Feed Pumps	4 pumps complete with accessories installed on a skid	Peristaltic Tube Pumps, See Section 46 33 44 for pump details
NaOH BNR Aerobic Feed Pumps	2 pumps complete with accessories installed on a skid	Peristaltic Tube Pumps, See Section 46 33 44 for pump details
NaOH Citric Acid Neutralization and RO CIP Transfer Pump	1 pump complete with accessories installed on a skid, with spare on shelf	Peristaltic Tube Pumps, See Section 46 33 44 for pump details
Pump skid material	FRP or HDPE	
Piping material	PVC single/double wall, PFA tubing in PVC containment pipe	
Valves	PVC ball valves and ball check valves	
Accessories	Calibration column, pressure relief valves, flow metering, pressure switches, tube failure/leak detection sensors,	
Wetted Materials	PVC, EPDM, PTFE,	
Connection Details	Suction: Flanged, ANSI 150 Discharge: Socket	

2.03 SODIUM HYPOCHLORITE SYSTEM

A. Sodium hypochlorite system consists of the following:

Item	Details	Remarks
Chemical detail	12.5% sodium hypochlorite (NAOCL)	
Storage Tanks	1 x 750 gallons XLPE Tank	See Section 43 41 48 for details
NaOCl Preformed Chloramine MBR Filtrate Feed Pump, Murray MF Feed Pump, San Vicente RO Feed Pump	4 pumps complete with accessories installed on a skid	Peristaltic Tube Pumps, See Section 46 33 44 for pump details
NaOCl Murray UV/AOP Feed Pumps	2 pumps complete with accessories installed on a skid	Peristaltic Tube Pumps, See Section 46 33 44 for pump details
NaOCl San Vicente UV/AOP Feed Pumps	2 pumps complete with accessories installed on a skid	Peristaltic Tube Pumps, See Section 46 33 44 for pump details
NaOCl MF EFM/TMC & CIP Transfer Pumps	1 pump complete with accessories installed on a skid, with shelf spare	Peristaltic Tube Pumps, See Section 46 33 44 for pump details
NaOCl MBR MC & CIP Transfer Pumps	1 pump complete with accessories installed on a skid, with shelf spare	Peristaltic Tube Pumps, See Section 46 33 44 for pump details
Pump skid material	FRP or HDPE	
Piping material	PVC single/double wall, PFA tubing in PVC containment pipe	
Valves	PVC vented ball valves and ball check valves	
Accessories	Calibration column, pressure relief valves, flow metering, pressure switches, tube failure/leak detection sensors,	
Wetted Materials	PVC, FPM/Viton, PTFE, Hastelloy C-276	
Connection Details	Suction: Flanged, ASME 150 Discharge: Socket	

2.04 LIQUID AMMONIUM SULFATE SYSTEM

A. Liquid ammonium sulfate system consists of the following:

Item	Details	Remarks
Chemical detail	38% Ammonium Sulfate (LAS)	

Item	Details	Remarks
Storage Tanks	1 x 160 gallons XLPE Tank	See Section 43 41 48 for details
LAS Preformed Chloramine MBR Filtrate Feed Pumps, Murray MF Feed Pump, and San Vicente RO Feed Pump	3 pumps complete with accessories installed on a skid, with spare on shelf.	Peristaltic Tube Pumps, See Section 46 33 44 for pump details
LAS Murray MF UV/AOP Feed Pump and San Vicente RO UV/AOP Feed Pump	1 pump complete with accessories installed on a skid, with shelf spare	Peristaltic Tube Pumps, See Section 46 33 44 for pump details
Pump skid material	FRP or HDPE	
Piping material	PVC single/double wall, PFA tubing in PVC containment pipe	
Valves	PVC ball valves and ball check valves	
Accessories	Calibration column, pressure relief valves, flow metering, pressure switches, tube failure/leak detection sensors,	
Wetted Materials	PVC,	
Connection Details	Suction: Flanged, ANSI 150 Discharge: Socket	

2.05 SULFURIC ACID SYSTEM

A. Sulfuric acid system shall include the following:

Item	Details	Remarks
Chemical detail	93% sulfuric acid (SAC)	Specific Gravity 1.83
Storage Tanks	1 x 405 gal XLPE tank	See Section 43 41 48for details
SAC San Vicente RO Feed Pumps	1 pump complete with accessories installed on a skid	See Section 46 33 42.16 for pump and accessory details
SAC Murray RO Feed Pumps	1 pump complete with accessories installed on a skid	See Section 46 33 42.16 for pump and accessory details
SAC Murray CRRO Feed Pumps	1 pump complete with accessories installed on a skid	See Section 46 33 42.16 for pump and accessory details
SAC Murray FFRO Feed Pumps	1 pump complete with accessories installed on a skid	See Section 46 33 42.16 for pump and accessory details
Pump skid material	FRP or HDPE	
Piping material	Suction: PVDF Discharge: PVDF/PFA Tubing	

Item	Details	Remarks
Valves	Suction: PVDF Ball Valves Discharge: PVDF Ball Valves	
Accessories	Calibration columns, pressure relief valves, pulsation dampeners, pressure gauges, pressure switches, backpressure valves, flow meters, and leak sensors, spill containment pallet for metering pumps	
Wetted Materials	PVDF, Viton, Hastelloy C276	
Connection Details	Suction: Flanged, ANSI 150 Discharge: Threaded, FNPT	

2.06 ANTISCALANT SYSTEM

A. Antiscalant system shall include the following:

Item	Details	Remarks
Chemical detail	100% Antiscalant (AS)	Specific Gravity 1.25
Storage Tanks	1 x 55 gallon poly drum tank	
AS San Vicente RO Feed Pumps	1 pump complete with accessories installed on a skid	See Section 46 33 42.16 for pump and accessory details
AS Murray RO Feed Pumps	1 pump complete with accessories installed on a skid	See Section 46 33 42.16 for pump and accessory details
AS Murray CRRO Feed Pumps	1 pump complete with accessories installed on a skid	See Section 46 33 42.16 for pump and accessory details
AS Murray FFRO Feed Pumps	1 pump complete with accessories installed on a skid	See Section 46 33 42.16 for pump and accessory details
Pump skid material	FRP or HDPE	
Piping material	CPVC	
Valves	CPVC ball valves	
Accessories	Calibration columns, pressure relief valves, pressure gauges, pressure switches, flow meters, and leak sensors, spill containment pallet for metering pumps and storage drum	
Wetted Materials	CPVC, EPDM, Type 316 stainless steel	
Connection Details	Suction: Flanged, ANSI 150 Discharge: Threaded, FNPT	

2.07 CITRIC ACID SYSTEM

A. Citric acid system shall include the following:

Item	Details	Remarks
Chemical detail	50% Citric acid (CAC)	Specific Gravity 1.24
Storage Tanks	1 x 105 gallons XLHDPETank	See Section 43 41 48 for details
CAC MF CIP & RO CIP Transfer Pumps	1 pump complete with accessories installed on a skid, with shelf spare	Peristaltic Tube Pumps, See Section 46 33 44 for pump details
CAC MBR CIP Transfer Pumps	1 pump complete with accessories installed on a skid, with shelf spare	Peristaltic Tube Pumps, See Section 46 33 44 for pump details
Pump skid material	FRP or HDPE	
Piping material	PVC single/double wall, PFA tubing in PVC containment pipe	
Valves	PVC vented ball valves and ball check valves	
Accessories	Calibration column, pressure relief valves, flow metering, pressure switches, tube failure/leak detection sensors,	
Wetted Materials	PVC, FPM/Viton, PTFE, Hastelloy C-276	
Connection Details	Suction: Flanged, ASME 150 Discharge: Socket	

2.08 SODIUM BISULFITE SYSTEM

A. Sodium Bisulfite system shall include the following:

Item	Details	Remarks
Chemical detail	38% Citric acid (CAC)	Specific Gravity 1.14
Storage Tanks	1 x 105 gallons XLHDPETank	See Section 43 41 48 for details
SBS Ozone Influent Feed Pumps and Ozone Effluent Feed Pumps	2 pumps complete with accessories installed on a skid	Peristaltic Tube Pumps, See Section 46 33 44 for pump details
SBS MF Cleaning & RO Flush Neutralization Transfer Pumps	1 pump complete with accessories installed on a skid, with shelf spare	Peristaltic Tube Pumps, See Section 46 33 44 for pump details
Pump skid material	FRP or HDPE	
Piping material	PVC single/double wall, PFA tubing in PVC containment pipe	
Valves	PVC ball valves and ball check valves	

Item	Details	Remarks
Accessories	Calibration columns, pressure relief valves, pulsation dampeners, pressure gauges, pressure switches, flow meters, backpressure valves, leak sensors.	
Wetted Materials	PVC, Buna-N, EPDM, Viton, 316 Stainless Steel	
Connection Details	Suction: Flanged, ANSI 150 Discharge: Threaded, FNPT	

2.09 ACETIC ACID SYSTEM

A. Acetic acid system shall include the following:

Item	Details	Remarks
Chemical detail	56% Acetic Acid (ACOH)	Specific Gravity 1.062
Storage Tanks	1 x 1015 gallons XLPE Tank	See Section 43 41 48 for details
ACOH BNR Feed	2 pumps complete with accessories installed on a skid	Peristaltic Tube Pumps, See Section 46 33 44 for pump details
Pump skid material	FRP or HDPE	
Piping material	Suction: PVDF Discharge: PVDF/PFA tubing	
Valves	PVDF ball valves and ball check valves	
Accessories	Calibration column, pressure relief valves, flow metering, pressure switches, tube failure/leak detection sensors,	
Wetted Materials	PVDF, FPM/Viton, PTFE, Hastelloy C-276	
Connection Details	Suction: Flanged, ASME 150 Discharge: Socket	

PART 3 EXECUTION

3.01 INSTALLATION

A. Installation shall be in strict accordance with the Manufacturer's instructions and recommendations. Installation shall be certified by the Subcontractor on Form 43 05 11-A as provided in Section 01 99 90.

B. Anchor bolts and other hardware required for the installation shall be provided by the Contractor.

C. The equipment must be balanced and leveled to ensure proper operation.

3.02 SPARE PARTS AND SPECIAL TOOLS

A. Provide the Manufacturer’s recommended spare parts for the initial two years of operation.

B. Provide special tools required for maintenance of the system.

3.03 STARTUP AND TESTING

A. Start-up and commissioning shall be performed in accordance with Sections 01 91 13 and 01 91 14. The Subcontractor shall provide a factory representative, knowledgeable of the system and components, to inspect the final installation, supervise the initial operation, and train necessary personnel in the proper operation and maintenance for the system.

3.04 TRAINING

A. The Subcontractor shall provide the services of a factory-trained Manufacturer's representative to provide training for a minimum of 4 hours for each system. Prior to final acceptance, the Manufacturer's representative shall complete and provide supplier's Certification of Training on Form 43 05 11-B as provided in Section 01 99 90.

END OF SECTION

SECTION 46 24 23
INLINE GRINDERS

PART 1 GENERAL

1.01 DESCRIPTION

A. Scope:
   1. This section specifies in-line grinders complete with electric motors, controllers, and all appurtenances.

B. Type:
   1. Equipment provided under this specification shall be of the twin shaft, counter-rotating differential speed type with intermeshing cutters. The grinders shall be the in-line type with an oversized cutter chamber. The space between the rotating cutters and the cutting chamber side walls shall avoid short-circuiting of the cutting elements.

C. Equipment List:

Item	Equipment No.
Primary influent grinder	ME-300

D. Design Requirements:
   1. General:
      a. The grinder shall be designed to be installed as shown in a process pipeline to continuously macerate from a wastewater treatment plant. Solids to be encountered during operation of the grinders are those typically found in wastewater and include heterogeneous mixtures of organic and inorganic material. Concentrations of solids are expected to range up to 25 percent. Organic solids include fecal material, vegetable parts, rubber goods, plastics, paper products, bones, small chunks of wood and semi-solid grease particles. Inorganic solids will include rocks, sand, and metal pieces of various sizes and composition. The liquid is expected to contain oil, grease, petroleum products, solvents, and water.
      b. The equipment shall be capable of operation either with or without liquid in the pipeline and shall operate without an external source of water for flushing seals or cutter faces. The design shall also permit removal and replacement of internal rotating parts without removing the grinder side housings from the piping system. The grinder shall be supplied with ASME B16.1 125-pound flanges.
      c. The grinder shall be provided with a dedicated controller to control operation of the machine. The controller shall have sensors designed to detect motor overload and initiate momentary reversal of cutter operation to cure the condition, and then resume normal operation. If the overload clears, normal operation shall be maintained. If the overload reoccurs, the process shall be repeated. If overload still remains after three attempts within 30 seconds, the

controller shall lock out the grinder's control circuits and initiate alarm through dry contacts to an external circuit.

2. Characteristics:
   a. Equipment furnished under this section shall conform to the following:
      1) Grinder
         a) Cutting chamber height, 5/16 inches
         b) Pipe size, 4 inches
         c) Rated capacity, 100 gpm
         d) Maximum pressure loss at rated flow, 0.75 feet
         e) Cutter teeth, 7 tooth
         f) Cutter tooth:
            (1) Height, 1/2 inches
            (2) Root diameter overlap, 1/16 inches
      2) Motor
         a) Horsepower, 2hp, 230/460V, 3-Phase
         b) Type, TEFC

1.02 QUALITY ASSURANCE

A. References:
   1. This section contains references to the following documents. They are a part of this section as specified and modified. Where a referenced document contains references to other standards, those documents are included as references under this section as if referenced directly. In the event of conflict between the requirements of this section and those of the listed documents, the requirements of this section shall prevail.
   2. Unless otherwise specified, references to documents shall mean the documents in effect at the time of Advertisement for Bids or Invitation to Bid (or on the effective date of the Agreement if there were no Bids). If referenced documents have been discontinued by the issuing organization, references to those documents shall mean the replacement documents issued or otherwise identified by that organization or, if there are no replacement documents, the last version of the document before it was discontinued. Where document dates are given in the following listing, references to those documents shall mean the specific document version associated with that date, regardless of whether the document has been superseded by a version with a later date, discontinued or replaced.

Reference	Title
AGMA 6010-E	Spur, Helical, Herringbone and Bevel Enclosed Drives
AISI	Pocketbook of AISI Standard Steels
ASME B16.1	Cast Iron Pipe Flanges and Flanged Fittings, Class 25, 125, 250, and 800
ASTM A48	Gray Iron Castings
ASTM A536	Ductile Iron Castings

Reference	Title
NEMA 250	Enclosures for Electrical Equipment (1000 volts maximum)

B. Factory Tests:
   1. The grinder shall be hydrostatically tested at the factory. Test pressure shall be 60 psig, which shall be held for a period of not less than 60 minutes. Leakage throughout the test period shall be zero.

C. Unit Responsibility:
   1. The Contractor shall assign unit responsibility as specified in Section 43 05 11-1.02 Unit Responsibility to the grinder manufacturer for the equipment specified in this section. A certificate of unit responsibility shall be provided.

1.03 ENVIRONMENTAL CONDITIONS

A. The grinders will be located at a wastewater treatment plant where frequent washdowns can be expected. The temperature of the waste material is expected to vary between 40 degrees F and 90 degrees F, and pH is expected to range between 5 and 8.

1.04 SUBMITTALS

A. Submittals shall be provided as specified in Section 01 33 00 and shall include the following:
   1. A copy of this specification section, with addendum updates included, and all referenced and applicable sections, with addendum updates included, with each paragraph check-marked to indicate specification compliance or marked to indicate requested deviations from specification requirements. Check marks (□) shall denote full compliance with a paragraph as a whole. If deviations from the specifications are indicated, and therefore requested by the Contractor, each deviation shall be underlined and denoted by a number in the margin to the right of the identified paragraph, referenced to a detailed written explanation of the reasons for requesting the deviation. The Construction Manager shall be the final authority for determining acceptability of requested deviations. The remaining portions of the paragraph not underlined will signify compliance on the part of the Contractor with the specifications. Failure to include a copy of the marked-up specification sections, along with justification(s) for any requested deviations to the specification requirements, with the submittal shall be sufficient cause for rejection of the entire submittal with no further consideration.
   2. A copy of the contract document control diagrams and process and instrumentation diagrams relating to the submitted equipment, with addendum updates that apply to the equipment in this section, marked to show specific changes necessary for the equipment proposed in the submittal. If no changes are required, the drawing or drawings shall be marked "no changes required". Failure to include copies of the relevant drawings with the submittal shall be cause for rejection of the entire submittal with no further review.
   3. Certificate of Unit Responsibility attesting that the Contractor has assigned, and that the manufacturer accepts, unit responsibility in accordance with the

requirements of this Section and Section 43 05 11-1.02 Unit Responsibility. No other submittal material will be reviewed until the certificate has been received and found to be in conformance with these requirements.

4. Shop drawings for the grinder and control panel.
5. Control panel wiring diagram identifying all internal and face mounted components and connections to remote equipment.
6. Motor data Section 43 05 21-Form A as specified in Section 43 05 21-1.03.

PART 2 PRODUCTS

2.01 ACCEPTABLE PRODUCTS

A. The in-line grinders shall be Muffin Monster 30000 Series as manufactured by Disposable Waste Systems, Inc., MG-304 Macerator-Grinder as manufactured by Wiesmann Engineering, Inc. or approved equal, modified to provide the specified features and to meet the specified operating conditions.

2.02 MATERIALS

Component	Material
Casing, including cleanout cover	Cast iron, ASTM A48, Class 30or Type 304 stainless steel
Shafts	Steel, AISI 4140, Tensile strength 183,000 psi minimum
Cutters and spacers	Cast steel, AISI 4130, through hardened to 48-50 Rockwell C
Side rails	Ductile iron, ASTM A536 or Type 304 stainless steel
Fasteners, including bolts nuts, washers and keys	Stainless steel

A. Materials specified are considered the minimum acceptable for the purposes of durability, strength, and resistance to erosion and corrosion. The Contractor may propose alternative materials for the purpose of providing greater strength or to meet required stress limitations. However, alternative materials must provide at least the same qualities as those specified for the purpose.

2.03 EQUIPMENT

A. Body:
   1. The body shall be cast with connecting flanges and smooth transition sections to the cutter chamber. The casting shall have cleanout covers on both sides of the cutting chamber and machined bearing supports top and bottom for both the drive and driven shafts.

B. Side Rails:
   1. Side rails shall be designed to mate with the cutting teeth and shall be bolted to the body.

C. Shafts, Cutters and Spacers:

1. Shafts shall be minimum 2-inch hexagonal in cross-section and shall mate with cutters and spacers with no more than 0.040-inch clearance. The driven shaft shall rotate at approximately 2/3 the speed of the drive shaft, driven through gears mounted above the upper bearings.

D. Bearings and Seals:
1. The bearing/seal design shall be either of the following two types:
   a. Type 1:
      1) Shaft radial and axial loads shall be borne by four sealed oversize Conrad-type ball bearings, which will be rated by the bearing manufacturer with a minimum basic dynamic load rating of 7,050 pounds. The bearings will be protected against the intrusion of any foreign particles by a combination of a tortuous path device and end-face mechanical seals. Face materials must be a minimum of tungsten carbide to tungsten carbide, not requiring an external flush. The mechanical seal will be rated at 60 psi continuous duty by the manufacturer. The bearings and seals will be housed in replaceable wear sleeves that support and align the bearings and seals.
   b. Type 2:
      1) The grinder shall have a bearing/seal configuration designed to resist the intrusion of wastewater, sludge, and grit into the bearing system. The bearing shall be sleeve type manufactured from nylon acetal suitable for grease lubrication. The seal assembly shall consist of a neoprene V-ring seal with stainless steel grit check. The seal shall require no external water source for sealing. The bearings shall be grease lubricated for a grit purge.

E. Gear:
1. The speed reduction gear shall be designed for continuous duty heavy shock loads in accordance with AGMA 6010-E and shall be a concentric shaft, planetary design, sealed in grease.

F. Motor:
1. The drive motor shall be of the type specified in paragraph 1.01 Characteristics and shall be energy efficient, conforming to the requirements of Section 43 05 21.

G. Control Panel:
1. A motor controller shall be provided for each grinder and located VCP-300. The panel shall have a NEMA 4X enclosure. Components required for operation of the grinder shall conform to the requirements of Section 43 05 21 and Division 26.
2. The motor controller shall utilize a solid state logic design and shall be line transient protected to 1000 volts. A transformer shall supply all low and intermediate control voltages. All transformer legs and logic shall be fuse protected. Supply voltage shall be 460 volt, 3 phase, 60 Hz. The controller shall be equipped with voltage unbalance protection, motor overload protection, and single-phase protection. The controller shall provide the following functions:
   a. Operate in a "Local," "Off," or "Auto" mode. The unit shall start and stop by manual push-button operation in the "Local" mode. In the "Auto" mode, the unit shall start and stop by remote signal.

b. Sense an overload (jam) condition, momentarily reverse the shaft direction to clear the condition and return to a forward direction. If the overload has cleared, return to normal operation.
c. If a second overload (jam) occurs, the same schedule shall apply as for one overload condition.
d. If a third overload (jam) occurs within 30 seconds, the grinder shall reverse the shaft direction, shut down, and a light and alarm circuit will be energized. An overload dry alarm contact shall be provided. Contact shall open when third overload (jam) occurs within 30 seconds.

3. The controller panel shall be provided with status lights for overload/alarm, run, and line active. In addition, a start switch, a stop/reset switch, and a local/off/remote switch shall be provided.
4. A dry normally open status contact shall be provided. Contact shall close when grinder is running.

2.04 SPARE PARTS

A. The following spare parts shall be provided for each grinder size:
1. 2 sets -- seal assemblies
2. 2 sets -- bearing assemblies
3. 4 sets -- gaskets
4. 1 cutter cartridge
5. 1 set -- guide rails

B. Spare parts shall be packed and boxed as specified in Section 43 05 11.

2.05 PRODUCT DATA

A. The following product data shall be provided in accordance with Section 01 33 00:
1. Certification attesting to completion of the hydrostatic test, as specified in paragraph 1.02 Factory Tests.
2. Applicable operation and maintenance information as specified in Section 01 78 23.
3. Motor data as specified in Section 43 05 21.
4. Installation certification Section 43 05 11-Form A as specified in paragraph 3.01.
5. Product data for equipment control devices as specified in Section 40 92 00.

PART 3 EXECUTION

3.01 INSTALLATION

A. The equipment specified under this section shall be installed in accordance with the manufacturer's recommendations and the details shown. The installation shall be certified on Form 43 05 11-A specified in Section 01 99 90.

3.02 TESTING

A. After completion of the installation, the grinder shall be field tested to demonstrate compliance with the specified performance requirements. Field testing shall include overloading to activate the automatic stop and reverse control.

3.03 TRAINING

A. The Contractor shall cause a factory trained representative to conduct not less than 4 hours of training for plant personnel on operation and maintenance of the equipment provided under this section. Training shall be certified on Form 43 05 11-B specified in Section 01 99 90.

END OF SECTION

THIS PAGE INTENTIONALLY LEFT BLANK

SECTION 46 31 52
OZONE/BIOLOGICAL ACTIVATED CARBON (BAC) SYSTEM

PART 1 - GENERAL

1.01 BACKGROUND

A. This specification details the minimum requirements for the design, supply, supervision of installation, commissioning, testing, and performance requirements of an ozone with biological activated carbon (ozone/BAC) system.

B. The purpose of the ozone process is to oxidize organics in the water, as well as provide disinfection of virus, *Giardia*, and *Cryptosporidium*. The ozone system works together with the biological activated carbon (BAC) process to remove total organic carbon (TOC), trace organics, and suspended solids from the feed water to the facility. The BAC system's main mechanisms of treatment are biodegradation (organics) and physical filtration (suspended solids).

C. The Pure Water Facility (PWF) portion of the CASSF will consist of two parallel treatment trains (Murray Treatment Train and San Vicente (SV) Treatment Train), with only the Murray Train consisting of ozone/BAC.

D. The ozone system will include two ozone dissolution options: a primary ozone fine bubble diffusion system consisting of PVC columns and some diffusers, and a standby direct injection system with a pump, venturi injector, and static mixer.

E. The influent to the ozone/BAC process shall be nitrified-partially denitrified membrane bioreactor (MBR)-treated wastewater.

F. The Ozone/BAC System Supplier (OBACSS) is responsible for the equipment and services to be provided under this Section, and shall include the following major process equipment components (hereafter referred to as the Ozone/BAC System):

1. Oxygen generation system
2. Ozone generation system
3. Both ozone dissolution options: fine bubble diffuser system (primary) and direct injection system (standby)
4. Refrigerated chiller for ozone generator cooling
5. Ozone destruct unit
6. Ozone product pumps
7. Ozone programmable logic controller (PLC)
8. BAC filter columns
9. BAC filter column granular activated carbon (GAC) media
10. BAC air scour blower
11. BAC backwash pump
12. BAC PLC
13. Instrumentation, valves, and actuators as indicated on the Drawings

G. The ozone process will also consist of a pipeline contactor which will be supplied and installed by the Contractor. Specifications for the ozone contactor are included separately under Section 46 31 54.

H. The OBACSS shall be deemed to have used its judgement as an expert in the field and shall include any associated items not mentioned specifically within this specification which are necessary to provide an ozone/BAC system that is complete and meets the requirements of this Section.

I. Ozone/BAC Feed Water Quality: The feed water entering the ozone system will be nitrified-partially denitrified MBR filtrate. The MBR filtrate will be chloraminated (via preformed chloramines) prior to the ozone system. A sodium bisulfite (SBS) dosing point will be included in the ozone system influent to provide the option to dechloraminate prior to the ozone process. A total chlorine analyzer upstream of the SBS dosing point and an oxidation reduction potential (ORP) analyzer downstream of the SBS dosing point will be used to control the dosing.

1.02 REQUIREMENTS

A. The Ozone/BAC system shall be manufactured by an OBACSS listed in 1.03, or an approved equal contingent on the submitted references in 1.04.

B. The Ozone/BAC system will be comprised of two major skids and several standalone units. The designed physical grouping of process equipment to be provided pre-mounted on skids by the OBACSS is as follows (per the Drawings). Additional information on the definitions and specific scope of equipment to be supplied with the listed systems below can be found in Part 2 of this Section.

1. Ozone generator skid/container (with pre-installed wiring and piping connections by OBACSS).

   a. Oxygen generation system with receiver

   b. Ozone generator with power supply unit (with ozone gas piping to the ozone fine bubble diffuser columns by Contractor)

   c. Ozone direct injection system

   d. Ozone programmable logic controller (PLC) and operator interface terminal (OIT)

   e. Main ozone power distribution panel

2. BAC tower skid (with pre-installed wiring and piping connections, except as noted)

   a. Ozone fine bubble diffuser columns (with equipment wiring back to the ozone generator skid/container by the Contractor)

   b. BAC filter columns

   c. BAC PLC and OIT

   d. Main BAC power distribution panel

3. The following equipment is to be provided shipped loose by the OBACSS, with wiring and piping connections to be completed by the Contractor:

   a. Refrigerated chiller unit (with equipment wiring and cooling water piping to the ozone generator skid/container by the Contractor)

(1) Note: the chiller unit may be included on the ozone generator skid/container at the discretion of the OBACSS

b. Ozone destruct unit (with equipment wiring to the ozone generator skid/ container and off-gas piping to the destruct unit by the Contractor)

(1) Note: the destruct unit may be included on the ozone generator skid/ container at the discretion of the OBACSS

c. BAC backwash pump (with wiring and piping to the BAC tower skid by Contractor)

(1) Note: the BAC backwash pump may be included on the BAC tower skid at the discretion of the OBACSS

d. BAC air scour blower (with wiring and piping to the BAC tower skid by Contractor)

(1) Note: the destruct unit may be included on the BAC tower skid at the discretion of the OBACSS

C. All ozone gas generation equipment and conveyance must be designed and installed in accordance with the California Fire Code (CFC) Section 6005.

D. The ozone generation skid (excluding the chiller and destruct) shall fit within a footprint measuring 11.5 feet by 30 feet with a maximum height of 10 feet. The BAC tower skid (excluding the ozone product pumps, BAC backwash pump, and air scour blower) shall fit within a footprint measuring 12 feet by 12 feet with a maximum height of 25 feet.

E. The ozone generation skid has been designed around a containerized skid system. The OBACSS may provide a non-containerized system, provided adequate sun and rain protection is provided by the OBACSS to protect sensitive equipment.

F. All ozone system skid piping shall be supplied by the OBACSS. Interconnecting field piping shall be supplied and installed by the Contractor.

G. The ozone system equipment, piping, and skid frames shall be designed for outdoor use. All electrical and control panel enclosures shall be NEMA Type 4X (except for equipment that is provided within a containerized unit).

H. Power shall be supplied to the Ozone/BAC system by the Contractor. Power shall be supplied at 480V, 3-phase, 60 Hz. Power requirements shall be as shown on the Drawings.

I. The ozone generator skid/container shall have its own dedicated PLC for control of ozone system components provided by the OBACSS. The BAC tower skid shall have its own dedication PLC for control of BAC system components provided by the OBACSS. Access to the control logic for each PLC shall be provided to the Owner or Owner's AGENT (OA).

J. All furnished piping must be suitable for use with the specific gas mixture or liquid solution that is being conveyed, including up to 10% w/w ozone gas and 10 mg/L ozone solution. All wetted gaskets exposed to ozone solutions shall be Viton. All gaskets used for ozone gas piping shall be Teflon. No EPDM gaskets shall be used for piping with ozone (gas or solution) exposure.

1.03 OZONE/BAC SYSTEM SUPPLIERS

A. Acceptable Ozone/BAC System Suppliers are listed below:

1. Suez Water Technologies and Solutions
2. Xylem Wedeco
3. Or approved equal

1.04 REFERENCE INSTALLATIONS

A. Unless listed by name in 1.03, the Contractor shall provide documentation of the OBACSS experience with the design and assembly of Ozone/BAC systems for City approval. The OBACSS shall have verifiable designs and installations of similar capacity and operation , treating a water of similar quality at a capacity of 20 gpm or larger. Only municipal water or water reuse projects will apply as comparable projects to meet these requirements. Submitted project references shall include the project name, location, date of completion, flow, equipment, and owner contact information.

B. Owner or OA reserves the right to contact each of the facilities provided for reference. If the facility is deemed not applicable, the reference will not be considered as valid.

1.05 SUBMITTALS

A. The OBACSS shall provide the following drawings at time of bid at a 90% design level:

1. General Arrangement Drawing(s)
2. Mechanical Drawings
3. Process and Instrumentation Diagrams
4. Structural analysis of BAC filters (e.g., finite elemental analysis)

B. The OBACSS shall also provide details about support services included in bid, such as installation supervision, startup and testing support, and operator training. Details shall also be provided for the cost of optional support services that might be necessary in addition to those support services that are included in the bid. Refer to Part 3 of this Specification for additional requirements.

C. The OBACSS shall provide a detailed scope of supply

D. The OBACSS shall provide warranty terms and conditions for the supplied equipment

E. The OBACSS shall provide operation and maintenance manuals for the system before or at time of system installation.

F. The OBACSS shall provide test results from the GAC media supplier which verifies that the media conforms to the requirements listed in Section 2.14.

G. The OBACSS shall, in coordination with the Contractor, submit a Factory Acceptance Test Plan, Functional Test Plan, and Performance Test Plan for approval by the Owner and/or OA.

1.06 RELATED SECTIONS

A. Section 01 88 15: Anchorage and Bracing

B. Section 01 91 13: General Commissioning Requirements

C. Section 01 91 14: Testing and Startup

D. Section 09 90 00: Protective Coating
E. Section 40 05 06.16: Piping Connections
F. Section 40 05 60: Valves
G. Section 40 05 31: Thermoplastic Process Pipe
H. Section 40 05 57.13: Powered Actuators
I. Section 40 93 00: Plant Control Philosophy
J. Section 40 91 12: Process Analyzer Measuring Systems
K. Section 40 95 10: PLC-Based Control Systems Hardware
L. Section 40 95 20: PLC-Based Control Systems Software
M. Section 43 05 11: General Requirements for Equipment
N. Section 43 05 13: Rigid Equipment Mounts
O. Section 43 05 21: Common Motor Requirements for Equipment
P. Section 43 11 33: Helical Screw Rotary PD Blowers
Q. Section 43 23 03: General Requirements for Centrifugal Pumps
R. Section 43 41 48: XLHDPE Tanks
S. Section 46 07 10: Chemical Systems
T. Section 46 31 54: Ozone Contactor

PART 2 - PRODUCTS

2.01 SYSTEM CONFIGURATION

A. The CASSF must be designed to operate unattended 24 hours per day at maximum capacity with periodic operator intervention. The Ozone/BAC system shall be automatically controlled from dedicated PLCs located on each skid. The Ozone/BAC System must be capable of automatic shutdown upon a fault condition and shall have the ability to have both automatic and manual restart capabilities.

B. The Ozone/BAC system shall be capable of continuous automatic operation.

C. MBR filtrate will be piped by the Contractor with the option to feed with either the ozone direct injection system (located on the ozone generator skid/container) or the fine bubble diffuser columns system (located on the BAC tower skid). Fine bubble diffusion will be the primary mode of ozone dissolution, with direct injection as standby.

D. Compressed air from a central CASSF compressed air system will be provided to the oxygen generator system by the Contractor. The compressed air system shall provide a minimum of 32 SCFM at 90 psi. The oxygen generator will provide feed gas to the ozone generator. The ozone generator will provide 10% ozone gas to either ozone dissolution system, with ozone gas piping from the ozone generator skid/container to the ozone fine bubble diffusers provided by the Contractor. Ozonated effluent from either dissolution system will be piped to the Contractor-provided ozone pipeline contactor, by the Contractor. The ozone product pumps will lift ozone contactor effluent from the ozone product tank to feed the BAC filters.

E. The Ozone/BAC system shall provide connections, valving, and controls to control process flowrate, select ozone dissolution option, control ozone dose, and perform automated BAC backwashes with air scour. The BAC backwashes shall use BAC filtrate from a Contractor-provided BAC backwash tank.

F. The oxygen generation, ozone generation, and direction injection equipment will be physically located on the ozone generator skid/container. The ozone fine bubble diffuser and BAC equipment will be physically located on an additional BAC tower skid. The two skids will be separated by the Contractor-provided ozone pipeline contactor.

G. The Ozone/BAC system requires interface with the Main CASSF PLC System (Sections 40 93 00, 40 95 10, and 40 95 20).

2.02 OZONE/BAC DESIGN CRITERIA

A. The ozone components of the Ozone/BAC system shall meet the following design and performance criteria:

Parameter	Units	Value or Range
Design flowrate	gpm	148
Design TOC	mg/L	7.5
Ozone:TOC ratio	mg O3 /mg C	0.5-1.3
Maximum ozone dose	mg/L	10
Type of oxygen generation system	--	Pressure swing adsorption
Oxygen generator feed gas	--	Plant compressed air
Number of ozone generators	No.	1 + 0
Ozone generator capacity	lb/day	24
Design ozone gas concentration	%	5 - 10
Injector type for direct injection system	--	Venturi
Design Venturi injector gas flow range	scfm	1.5 – 2.0
Minimum mass transfer efficiency (MTE) for direct injection system	%	75
Number of pumps for direct injection	No.	1 + 0
Number of venturi injectors	No.	1 + 0
Number of direct injection static mixers	No.	1 + 0
Number of fine bubble diffuser columns	No.	2 + 0
Diameter of fine bubble diffuser columns	inch	12
Water Level within fine bubble diffuser columns	feet	20
Fine bubble diffuser column material	--	SCH 80 PVC
Number of dome diffusers per fine bubble diffuser column	No.	1 + 0
Total number of dome diffusers	No.	2 + 0
Dome diffuser gas flow range	scfm/diffuser	0.1 – 1.2
Dome diffuser diameter	mm	≤ 120
Minimum MTE for fine bubble diffuser system	%	75
Number of ozone destruct units	No.	1 + 0
Type of ozone destruct unit	--	Thermal or thermal catalytic

B. The BAC components of the Ozone/BAC system shall meet the following design and performance criteria:

Parameter	Units	Value or Range
General		
Design flowrate (instantaneous)	gpm	143
Design flowrate (net)	gpm	142
Design recovery	%	99.5
Number of BAC filters	No.	2 + 0
BAC filter area, each	ft^2	14.5
BAC filter media depth	feet	10
Design EBCT	min	15
Minimum EBCT	min	7.5
Design loading rate	gpm/ft^2	5
Maximum loading rate	gpm/ft^2	10
BAC media type	--	Virgin bituminous coal-based GAC
BAC media size	--	8x20
GAC iodine number (minimum)	mg/g	900
GAC abrasion resistance (RO-tap method)	--	75
Feed Pumps		
Number of ozone product pumps	No.	2 + 0
Ozone product pump capacity	gpm	74
Ozone product pump head	feet	30
Ozone product pump motor size	hp	1.5
Ozone product pump drive	--	VFD
Backwash Systems		
Backwash frequency	No./week	1
Hydraulic backwash rate	gpm/ft^2	15 - 25
Number of backwash pumps	No.	1 + 0
Backwash pump capacity	gpm	375
Backwash pump head	feet	30
Backwash pump motor size	hp	5
Backwash pump drive	--	VFD
Air scour loading rate	$scfm/ft^2$	4
Number of air scour blowers	No.	1 + 0
Air scour blower capacity	scfm	60
Air scour blower head	feet	30
Air scour blower motor size	hp	7.5

2.03 OZONE GENERATOR SKID/CONTAINER

A. The OBACSS shall provide the oxygen generation, ozone generation, direct injection equipment, power supply unit, OIT/PLC, and master power distribution panel on a skid-mounted or containerized system.

B. The system should be furnished with an ambient ozone sensor (adjacent to the ozone generator product gas analyzer) and ambient oxygen sensor (adjacent to the oxygen receiver tank) by the OBACSS. Both ambient sensors shall be integrated into controls for critical alarms. For a containerized system, the ambient ozone and oxygen alarms shall be connected to an exhaust fan which shall automatically start if the alarm is triggered. The exhaust fan shall be designed to provide no less than six (6) air changes per hour per CFC Section 6005.3.1.

C. For a containerized system, the container must be furnished with one (1) single-pane personal door with a 10” x 10” safety window and one (1) double-pane door with a minimum of one (1) 10” x 10” safety window on one of the door panes. All installed equipment shall be removable through the double-door. The containerized unit must also include washdown-rated LED interior lighting.

D. The ozone generator skid/container shall be equipped with an exterior electrical disconnect panel which allows for a single electrical connection to the skid and an interior electrical distribution panel to provide power to all skidded equipment including the chiller, and the ozone destruct unit (regardless of whether or not the chiller and destruct units are installed on skid or shipped loose).

E. Visual strobe lights and horn beacons shall also be supplied and triggered during an exceedance of ambient ozone or oxygen thresholds. A containerized system shall also include insulation, ventilation, climate control, lighting, doors, and paint by the OBACSS. Ceiling and wall insulation shall have a minimum R-value of 14 per ASTM C518 at 75 deg F and 16 per ASTM C518 at 35 deg F. Floors shall be insulated and nonslip.

F. Safety warning signs for the ozone generation equipment and process piping labels within the skid shall also be included by the OBACSS

1. Doors to a containerized system, or the ozone generator skid/container itself, must be furnished with signage stating: “OZONE GAS GENERATOR – HIGHLY TOXIC – OXIDIZER” per CFC 6005.3.2

2. All piping provided by the OBACSS shall be identified with the following: “OZONE GAS GENERATOR – HIGHLY TOXIC – OXIDIZER” per CFC 6005.4.3.

G. If the system is not provided in a container, the OBACSS must furnish adequate sun and rain protection for sensitive equipment. Conduit must enter electrical panel or control equipment enclosures from the bottom to prevent water intrusion.

H. For a containerized system, expected ambient temperatures will range from 45 deg F to 90 deg F and relative humidity up to 100%. An HVAC system (including air conditioning heating, and a fresh air damper) shall be provided will a containerized system to provide a suitable climate of between 65 deg F and 75 deg F and no greater than 60% relative humidity for equipment and operations staff within the container. The fresh air damper shall be capable of introducing outdoor air at a flow rate of no less than 300 SCFM.

I. Power will be supplied to the skid as a single, 480 V, 3 phase, 60 Hz supply. The OBACSS shall include load panel with a step-down transformer to distribute power to the skidded equipment as well as the chiller and destruct unit. The total demand for the oxygen generator, ozone generator, direct injection system and other ancillary equipment on the ozone generator skid/container shall not exceed 10 kW.

J. The ozone generator skid/container or container shall be coated to prevent corrosion of the steel in a damp coastal environment. Coatings shall be in accordance with Section 09 90 00. If not provided in a containerized unit, the skid shall be constructed of 304 stainless steel.

2.04 OXYGEN GENERATION SYSTEM

A. Oxygen shall be generated onsite via a pressure swing adsorption (PSA) oxygen generator system capable of producing oxygen gas a minimum of 90% purity.

B. The PSA oxygen generator shall be configured to accept compressed air from the central plant compressed air system. The compressed air supply will be dried and oil-free (Class 5.6.4 per ISO 8573.1). The plant compressed air system shall provide a minimum of 32 SCFM at 90 psi to the PSA oxygen generator.

C. The PSA oxygen generation system shall include a total of two (2) parallel adsorbent vessels with one (1) operating in duty mode and one (1) operating in purge mode.

D. The PSA system must include an oxygen receiver tank with a pressure indicator and a sample line to an oxygen purity analyzer.

E. The PSA system shall come equipped with a local control panel with Hand/Off/Auto (HOA) controls and be integrated for control by the ozone system PLC/OIT.

F. If containerized, all waste gas vents shall be routed to the container outlet to atmosphere. The waste-gas lines from each vessel shall be equipped with silencers to dampen the noise levels produced during the vessel purge cycle to below 90 decibels.

G. The PSA oxygen generator and receiver shall be sized by the OBACSS to meet the requirements of the ozone generator, including a design gas flow rate of 2 SCFM and turndown gas flow rate to at least 1 SCFM adequate for achieving the turndown ozone dose (refer to 2.05 for additional details on ozone dose control).

H. The OBACSS shall include spare parts to perform one (1) year of regular maintenance on the oxygen generator system

2.05 OZONE GENERATION SYSTEM

A. The ozone generator system shall be capable of providing a maximum of 24 lb/day at 10% w/w ozone gas to use with either ozone dissolution system (direct injection or fine-bubble diffusion). The typical ozone gas production rate will be 16 lb/day.

B. Ozone dose turndown shall be achieved two ways with the ozone system: 1) via adjustment of the ozone concentration at a constant gas quantity or 2) via adjustment of the gas quantity at a constant ozone concentration. The minimum ozone gas production rate shall be 12 lb/day. The ozone generator shall be capable of power turndown to achieve 5% w/w ozone gas at 2 SCFM and 10% w/w ozone gas at 1 SCFM to accomplish the minimum ozone production rate and corresponding dose.

C. The OBACSS shall provide all interconnecting piping between the oxygen generator system, ozone generation system, and direct injection system. Connection points shall be provided for the Contractor to connect chiller water piping between the ozone generator and refrigerated chiller as well as ozone gas piping to the fine bubble diffuser system (per the Drawings).

D. An ozone analyzer capable of reading 0-25% ozone w/w shall be provided by the OBACSS to measure the concentration of ozone gas produced by the ozone

generator. The ozone analyzer shall also include piping from the oxygen feed gas to use as a zero value for calibration. The ozone gas analyzer shall include a destruct and shall be vented to the atmosphere.

E. An ozone liquid separator shall be provided by the OBACSS to remove any moisture from the ozone gas. The liquid separator shall be equipped with a manual valve for periodic draining. The liquid separator shall also be equipped with a level sensor connected to the ozone system PLC to alert when the reservoir must be emptied upon reaching a high level.

F. A power supply unit (PSU) shall be provided as part of the ozone generator system which acts as an inverter to generate a medium frequency, 1 phase power supply to the ozone generator from the 480 V, 3 phase, 60 Hz power source. The electrical specifications for the PSU shall be determined by the OBACSS to provide the minimum and maximum ozone gas production rates described in this Section. The power supply unit enclosure shall have a temperature display.

G. The piping on the inlet side of the generator shall include the following components:

1. One (1) manual ball valve
2. One (1) pressure control valve on the inlet side of the generator
3. One (1) pressure indicating transmitter with a high pressure switch
4. One (1) flow meter with transmitter
5. One (1) dewpoint monitor
6. One (1) solenoid valve

H. The piping on the outlet side of the generator shall include the following components:

1. One (1) solenoid valve to control flow to the ozone analyzer described in 2.05 D
2. One (1) pressure gauge
3. One (1) flow control valve
4. One (1) check valve
5. One (1) manual ball valve
6. One (1) dewpoint monitor

I. The piping from the ozone generator to the dissolutions systems must include all instrumentation and equipment as shown in the P&IDs, including solenoid valves for dissolution system isolation and rotameters with needle valves for ozone gas control to the fine bubble diffusers.

2.06 DIRECT INJECTION SYSTEM

A. The OBACSS shall provide the following equipment which comprises the direct injection system:

1. One (1) direct injection pump with a capacity of 148 gpm and pressure of 60 psi
2. One (1) venturi injector capable of providing 120 scfh (2 scfm) of gas flow with a 148 gpm motive flow
3. One (1) static mixer following the venturi injector

4. The OBACSS shall be responsible for sizing the venturi injector and static mixer based on the design process and ozone feed gas flows

B. The OBACSS shall provide all interconnecting piping and valves for the above direct injection equipment and provide a flanged connection at the skid/container boundary for the Contractor to make field connections to the ozone contactor.

C. Per the Drawings, the available flow and pressure provided by the PWF feed pump (P-750) at the interface to the ozone direct injection system will be approximately 148 gpm at 138 feet or 60 psi. Available head is contingent on the final field-routing of piping (including the pipe loops) by the Contractor.

2.07 REFRIGERATED CHILLER

A. The OBACSS shall provide one (1) refrigerated chiller which cools the ozone generator via a closed-loop system

B. The OBACSS shall provide any necessary pumping for the refrigerated chiller cooling loop

C. The OBACSS shall provide the required coolant for the refrigerated chiller upon startup

D. The refrigerated chiller shall be sized by the OBACSS to provide adequate flow, pressure, and low temperature cooling water to the specific ozone generation system that is included in the Ozone/BAC System. The OBACSS must determine the appropriate cooling requirements for the generator make and model that is furnished with the system.

2.08 OZONE DESTRUCT UNIT

A. The OBACSS shall provide one (1) thermal or thermal/catalytic ozone destruct unit for handling of the ozone off-gas from various points in the ozone process

B. The destruct unit shall be sized to handle off-gas from the following locations:

1. The top of both fine bubble diffuser columns
2. Each of the two (2) passes of the ozone contactor
3. The top of the ozone product tank

C. The Contractor shall supply and install all off-gas collection piping from the ozone contactor to the ozone product tank and from the ozone product tank to the destruct unit. The Contractor shall also supply and install all off-gas piping from the boundary of the BAC tower skid to the ozone product tank. Off gas piping to the destruct unit shall be 1” 316 stainless steel.

D. The destruct unit shall be capable of treating the collected off-gas at a concentration of 2.5% w/w (15,200 mg/L by volume) and reducing the ozone concentration to less than or equal to 0.07 ppm in the vent gas, based on the California Air Resources Board (CARB) 8-hour average exposure limit.

E. The inlet to the destruct unit shall include a medium range ozone gas analyzer capable of measuring concentrations from 0-10% w/w and the destruct unit vent gas line shall include a low range ozone gas analyzer with a maximum detection limit of 0.01 mg/L by volume. Both ozone gas analyzer units shall be equipped with integral destruct units and be vented to atmosphere.

F. The destruct unit shall consist of a blower that is capable of maintaining a vacuum throughout the off-gas collection system including the headspace of the ozone product

tank (TNK-740), and the headspace of each of the fine bubble diffusers. The blower shall be sized to maintain -8 inches of vacuum at a design air flow rate of 2 SCFM.

G. The OBACSS shall supply and install a remote I/O module that is pre-wired to the ozone destruct unit equipment, as shown in the Drawings. The Contractor will be responsible for providing power and ethernet connection from the ozone generator skid/container to the destruct unit.

2.09 FINE BUBBLE DIFFUSER COLUMN

A. The OBACSS shall provide two (2) – 12-inch diameter fine bubble diffuser columns

B. The OBACSS shall install the fine bubble diffuser columns within the BAC tower skid (see 2.11 for additional details on BAC tower skid)

C. The fine bubble diffuser columns shall be 12 inches in diameter and sufficient height to maintain a water elevation of 20 feet

D. The top of each fine bubble diffuser column shall include a loosely fitting lid such that the columns are open to the atmosphere. This will allow the column to function with top-down, gravity flow. The venting of the column also allows ambient atmospheric air to be pulled into the headspace of the column by the vacuum created by the ozone destruct unit blower. Vacuum breakers shall be installed on each fine bubble diffuser lid to prevent a vacuum within the columns.

E. The columns shall be designed and installed with a countercurrent configuration: MBR filtrate feedwater enters from the top and flow downward while ozone gas enters the columns through a diffuser at the bottom of the column.

F. The OBACSS shall supply ozone fine bubble diffuser feed piping from the BAC tower skid boundary to the feed points at the top of each ozone fine bubble diffuser.

G. Water level will be maintained at 20 feet by manually throttling down globe valves in the fine bubble diffuser column effluent (one per column). Alternate designs for maintaining a constant operational water level of 20 feet within the fine bubble diffuser columns are acceptable, provided that the design maintains a top-down gravity flow of the ozone feedwater and that off-gas can be collected without fugitive gas to the atmosphere.

H. The fine bubble diffuser system must also be designed with backflow prevention in the ozone feed gas line. The OBACSS must design the ozone feed gas piping (within the boundaries of the BAC tower skid) to restrict backflow of water into the ozone gas line and back to the generator skid.

I. The fine bubble diffuser column material shall be schedule 80 PVC and shall follow the PVC piping specifications listed in 40 05 31. Any adhesives used for pipe joints shall be suitable for use with ozonated water at the concentrations expected (up to 10 mg/L).

J. The installed fine bubble diffuser columns should be provided with the ability to service and replace the dome diffusers from ground level.

K. Per the Drawings, the OBACSS shall provide one (1) demister column per each fine bubble diffuser column, mounted vertically above the top of the column in-line with the 1” 316 stainless steel off-gas piping. The demisters shall be mounted vertically such that any collected moisture drains back into the fine bubble diffuser column.

L. 1” 316 stainless steel off-gas piping shall be provided by the OBACSS to the boundary of the BAC tower skid. The Contractor will be responsible for continuation of the off-gas piping to the headspace of the ozone product tank and from the ozone product tank to the ozone destruct unit.

M. Per the Drawings, the available flow and pressure provided by the PWF feed pump (P-750) at the interface to the ozone direct injection system will be approximately 148 gpm at 138 feet or 60 psi. Available head is contingent on the final field-routing of piping (including the pipe loops) by the Contractor.

2.10 DOME DIFFUSERS

A. The Contractor shall provide two (2) dome diffusers (one per each fine bubble diffuser column) from an approved Dome Diffuser Manufacturer listed below:

1. Suez Water Technologies and Solutions (Ozonia)
2. Xylem Wedeco (Sanitaire)

B. The supplied dome diffuser shall be constructed of a ceramic material (e.g., aluminum oxide)

C. The Dome Diffuser Manufacturer/OBACSS shall provide all necessary mounting hardware such as mounting bolts and gaskets which shall be constructed of 316 stainless steel

D. Each dome diffuser shall be capable of providing a gas flow range of 0.1 to 1.2 scfm

E. The dome diffuser shall be compatible for use with ozone gas (5% to 15% concentration)

F. The dome diffuser shall be no larger than 120 mm in diameter

G. Any adhesives used for pipe joints shall be suitable for use with ozonated water at the concentrations expected (up to 10 mg/L).

H. The OBACSS shall mount the diffusers to the bottom of each fine bubble diffuser column, including connection to the ozone gas manifold

I. The Contractor shall supply stainless steel ozone gas piping from the ozone generation skid to the boundary of the BAC tower skid. The OBACSS shall supply stainless steel ozone gas piping from the BAC tower skid boundary to the inlet feed locations at the base of each fine bubble diffuser column.

2.11 BAC TOWER SKID

A. The OBACSS shall provide two (2) BAC filters as well as feed, filtrate, air scour, and backwash piping on a single skidded tower system (BAC tower). The BAC tower skid shall also accommodate the two (2) fine bubble diffuser columns and associated feed piping.

B. The BAC tower skid shall include an electrical disconnect panel for a single electrical connection and an electrical distribution panel to provide power to the skidded equipment and the BAC backwash pump and air scour blower (regardless of whether or not this equipment is included on the skid).

C. The BAC tower skid shall also house the BAC OIT/PLC control system.

D. The BAC tower shall include ladders or stairs to provide access to the top of the filters and fine bubble diffuser columns, provided this access is compliant with all relevant safety standards for the site

E. The BACSS is responsible for the structural design of the BAC tower which shall be sufficient to support all of the equipment provided within the tower. The design must satisfy the relevant structural and seismic codes included in Section 01 88 15.

F. The BAC tower skid shall be constructed of carbon steel which must be coated to prevent corrosion of the skid in a damp coastal environment. Coatings shall be in accordance with Section 09 90 00.

2.12 OZONE PRODUCT PUMP NO. 1 (P-750) AND OZONE PRODUCT PUMP NO. 2 (P-751)

A. The BACSS shall provide two (2) ozone product pumps which shall be provided pre-wired on a skid for installation by the Contractor or pre-wired and pre-installed by the OBACSS on the BAC tower skid. The ozone product pumps will lift the water from the ozone product tank (TNK-740) to feed the BAC filters

B. Each ozone product pump shall be capable of achieving a flow of 74 gpm and shall provide 30 feet of available hydraulic head. The suction side of the pumps will be plumbed to the ozone product tank (by Contractor) which will provide static head of approximately 4 feet (per the Drawings). The discharge will be plumbed by the Contractor to the boundary of the BAC tower skid and connected to the BACSS inlet for BAC filter feed.

C. All wetted components of the ozone product pumps shall be 316 stainless steel and Viton (or otherwise resistant to ozone) in the event that any residual ozone is not properly quenched prior to feeding the BAC filters.

D. If provided as a standalone skid, the ozone product pumps shall be wired by the Contractor to the BAC tower skid PLC

E. The ozone product pumps shall be equipped with a variable frequency drive located at the BAC tower skid PLC.

F. The ozone product pumps shall conform to the general requirements listed in Section 43 23 03.

G. The OBACSS may elect to include a pre-mounted and pre-wired ozone product pumps on the BAC tower skid if the skid footprint and pump suction hydraulics allow for it.

2.13 BAC FILTERS

A. The BACSS shall provide two (2) BAC filter columns installed within the BAC tower

B. The BAC filters shall be constant level, top-down gravity filters which are equipped for automated backwash and air scour cleans

C. The BAC filters shall be designed to uniformly distribute the feedwater over the entire media surface area

D. The BAC filters shall be constructed of 316 SS. Filter shape may be round or rectangular, given that the media area requirement is satisfied.

E. The OBACSS shall design the filter tank walls with a maximum deflection of 0.03” in the side wall of the tank. Structural analysis, which may include but is not limited to finite element analysis (FEA) shall be conducted on the filter tank walls to demonstrate that the filters are designed within these requirements.

F. The OBACSS shall ensure that the welding shop responsible for fabrication of the BAC filters must be certified to ASME IX or equivalent.

G. The BAC filters shall be designed to capture backwash water at the top of the filter for waste collection

H. Each BAC filter shall have a surface area of 14.5 ft2 and have capacity for a filter media depth of 10 feet. The filters shall be able to achieve a design empty bed contact time (EBCT) of 15 min with 143 gpm feed flow distributed among both filters and a minimum empty bed contact time of 7.5 min with 143 gpm feed flow distributed to a single duty filter.

I. Each BAC filter shall include underdrain systems which shall include all items within the filter column necessary to collect filtered water, uniformly distribute backwash water and air scour air, and retain and support the filter media.

J. The BAC filters and underdrain system shall be designed to operate at a maximum loading rate of 10 gpm/ft2, air scour rate of 4 scfm/ft2, and maximum backwash rate of 25 gpm/ft2

K. The BACSS shall supply and install all BAC feed effluent, backwash, air scour, and waste piping within the boundaries of the BAC tower skid.

2.14 BAC FILTER MEDIA

A. The BACSS shall supply the BAC filter media shipped loose to the site for loading by the Contractor.

B. The amount of media supplied shall be sufficient to fill both of the installed BAC filter columns with 10 feet of filter media. Excess media shall be provided to anticipate media settlement and compaction during installation

C. The BAC media shall be new (virgin) bituminuous coal-based GAC. GAC based on wood, lignite, peat, coconut, or sub-bituminous coal are not permitted. Extruded or pelletized carbon is not permitted.

D. The GAC shall have a minimum iodine number of 900 mg/g

E. The GAC shall have a minimum abrasion resistance of 75 by the RO-tap method

F. The GAC shall be 8x20 mesh

G. The GAC shall have a uniformity coefficient of no more than 1.4

H. The GAC shall be thoroughly washed and screened and be free of foreign materials

I. Acceptable manufacturers of the GAC media provided by the BACSS include:

1. Calgon Carbon
2. Norit

2.15 BACKWASH PUMP (P-860)

A. The BACSS shall provide one (1) BAC backwash pump shipped loose for installation by the Contractor

B. The BAC backwash pump shall have a flow capacity of 375 gpm, suitable for achieving a backwash rate of 25 gpm/ft2 for a single 15 ft2 BAC filter

C. The BAC backwash pump shall provide 30 feet of available hydraulic head. The suction side of the pump will be plumbed to the BAC backwash tank (by Contractor)

which will provide static head of approximately 11.5 feet (maximum) and 0.5 feet (minimum). The discharge will be plumbed by the Contractor to the boundary of the BAC tower skid and connected to the BACSS inlet for backwash supply

D. The BAC backwash pump shall be wired by the Contractor to the BAC tower skid PLC

E. The BAC backwash pump shall be equipped with a variable frequency drive at the BAC tower skid PLC

F. The BAC backwash pump shall conform to the general requirements listed in Section 43 23 03.

G. The OBACSS may elect to include a pre-mounted and pre-wired BAC backwash pump on the BAC tower skid if the skid footprint and pump suction hydraulics allow for it.

2.16 AIR SCOUR BLOWER (BLW-870)

A. The BACSS shall provide one (1) air scour blower shipped loose for installation by the Contractor

B. The air scour blower starter shall be supplied by the BACSS. The air scour blower shall be wired (by Contractor) to the BAC tower skid PLC.

C. The Contractor shall provide air scour piping from the air scour blower to the BAC tower skid boundary and connect it to the BACSS inlet for air scour supply.

D. The BAC air scour blower shall have a flow capacity of 60 scfm, suitable for achieving an air scour rate of 4 scfm/ft2 for a single 15 ft2 BAC filter

E. The BAC air scour blower shall have a rated head of 30 feet

F. The BAC air scour blower shall conform to the general requirements listed in Section 43 11 33.

G. The air scour blower shall come with an OIT for local control and system status display.

H. If there is available space within the 11 foot by 11 foot footprint, the BAC air scour blower may be provided within the BAC tower as a pre-mounted and pre-wired unit.

2.17 INSTRUMENTATION AND CONTROL

A. At a minimum, the following ozone system instrumentation shall be provided, installed, and wired by the OBACSS (per the Drawings). The OBACSS shall refer to the P&IDs for the location and integration of these instruments. OBACSS shall be responsible for confirming expected operating ranges for each of the listed instruments.

1. One (1) oxygen purity analyzer on oxygen receiver tank effluent
2. One (1) flow meter, one (1) pressure indicating transmitter with high pressure switch, and one (1) dew point monitor on oxygen gas supply to ozone generator
3. One (1) flow control valve on the ozone generator outlet line
4. Flow meter and temperature sensor on the closed cooling water loop
5. Ambient ozone and oxygen monitors for the ozone generator skid/container
6. One (1) ozone gas analyzer (0-25% w/w) on the ozone generator outlet line
7. One (1) pressure indicator and one (1) solenoid flow control valve on the ozone gas supply to the ozone liquid separator
8. One (1) high level switch on the ozone liquid separator

9. One (1) solenoid flow control valve on each of the ozone gas feeds to the direct injection system and both fine bubble diffuser columns. Three (3) total.
10. One (1) rotameter with needle valve on each of the ozone gas feeds to the fine bubble diffusers. Two (2) total.
11. One (1) flow meter, one (1) pressure indicator, and one (1) electrically actuated flow control valve on the direct injection pump discharge
12. One (1) pressure indicator on either side of the venturi injector of the direct injection system. Two (2) total.
13. One (1) magnetic flow meters and one (1) electrically actuated flow control valve on the feed to each fine bubble diffuser columns. Two (2) magnetic flow meters and two (2) electrically actuated flow valves total.
14. One (1) high-high level float switch on the top of each fine bubble diffuser. Two (2) total.
15. One (1) side-mounted pressure-type level element at the base of each fine bubble diffuser. Two (2) total.
16. One (1) open-close modulating valve on the destruct unit inlet
17. One (1) pressure indicating transmitter on the destruct unit inlet
18. One (1) medium range ozone gas analyzer (0-10% w/w) on the ozone destruct inlet
19. One (1) low range ozone gas analyzer (maximum detection limit of 0.01 mg/L) on the ozone destruct vent gas outlet

B. At a minimum, the following BAC system instrumentation shall be provided, installed, and wired by the OBACSS (per the Drawings). The OBACSS shall refer to the P&IDs for the location and integration of these instruments. OBACSS shall be responsible for confirming expected operating ranges for each of the listed instruments.

1. One (1) open-close electric actuating valve on the feed line, air scour line, backwash line, and waste line for each filter. Eight (8) total
2. One (1) electrically actuated flow control valve on the effluent line of each filter. Two (2) total.
3. One (1) magnetic flow meter on the influent line of each filter and one (1) magnetic flow meter on the BAC backwash pump discharge line. Three (3) total.
4. One (1) differential pressure meter between the feed line and effluent line of each filter. Two (2) total. Note: an alternative design of measuring the differential pressure across the filter (e.g., using the filter level analyzers and pressure between the underdrain and filter control valve) may be proposed in lieu of the differential pressure meters.
5. One (1) level analyzer on each BAC filter. Two (2) total.

2.18 PLC AND OIT

A. The OBACSS shall provide a master ozone system PLC (with OIT screen) on the ozone generator skid/container that performs all monitoring and controls as specified in the Ozone System Control Description (Specification Section 40 93 00) and the

Drawings. The PLC system shall adhere to the hardware and software requirements provided in Section 40 95 10 and Section 40 95 20.

B. The ozone system PLC shall:

1. Control ozone dose.

   a. Ozone dose will be controlled primarily based off a desired ozone to TOC ratio (O3:TOC). The user shall be able to enter a specified O3:TOC and the ozone PLC shall be configured to receive inputs from the Contractor furnished influent TOC meter (AE/AIT 822) via the Main CASSF PLC to calculate the required dose. This required dose and the flow meter readings from the OBACSS direct injection system or fine bubble diffuser columns (FE/FIT 704 or FE/FIT 705 and FE/FIT 706) will be used to calculate the required ozone quantity from the ozone generator. The influent TOC meter reading for the O3:TOC calculation shall be limited from 3 mg/L to 15 mg/L to prevent errant readings from creating extreme ozone dose scenarios. O3:TOC shall vary between 0.5 and 1.3. The system shall include a trim function which automatically calculates the dose based off the TOC reading from AE/AIT 822. This trim feature shall allow for automatic adjustment of the ozone dose using Proportional Integrative Derivative (PID) control based on the measured TOC concentration from AE/AIT 822. The PID control shall be configured to ensure that the dose does not vary erratically around the setpoint.

   b. A secondary ozone dosing strategy based on concentration x time (CT) shall also be included in the capabilities of the ozone system PLC. The user shall be able to specify a Cryptosporidium log reduction value (LRV) goal (typical value of 1.0). The Main CASSF PLC shall calculate CT and corresponding virus, Giardia, and Cryptosporidium LRVs based on the three dissolved ozone analyzers and water temperature from the ozone pipeline contactor as well as the ozone pipeline contactor characteristics hydraulic residence time and baffling factor. The ozone PLC shall retrieve the LRV readings from the Main CASSF PLC and the ozone dose shall be trimmed based on the Cryptosporidium LRV reading. This trim feature shall allow for automatic adjustment of the ozone dose using PID control based on the actual measured LRV. The PID control shall be configured to ensure that the dose does not vary erratically around the setpoint.

   c. Ozone dose shall also be able to be fixed at a constant user-defined setpoint

   d. In either case, the ozone PLC must be provided with the option to vary dose in two ways, as discussed in 2.05 above:

      (1) Constant gas flow, variable ozone concentration

      (2) Constant ozone concentration, variable gas flow

2. Retrieve the following analyzer readings from the Main CASSF PLC

   a. Ozone influent TOC (AE/AIT 822), UVT (AE/AIT 811), and oxidation reduction potential (AE/AIT 812)

   b. Ozone effluent UVT (AE/AIT 746) and oxidation reduction potential (AE/AIT 747)

3. Control ozone dissolution systems. The ozone PLC shall be able to select which ozone dissolution method is being used (fine bubble or direct injection) and shall be configured to take flow readings and control flows through each process.
    a. When the fine bubble diffuser columns are in use, VF 700A shall be manually closed. Even flow splitting among the two fine bubble diffuser columns shall be achieved by modulating FCV 708 and FCV709 based on the flow readings from FIT 705 and FIT 706. When the fine bubble diffuser column is in use, VF 700A shall be manually closed
    b. When the direct injection systems are in use, FCV 708 and FCV 709 shall be automatically closed. The ozone PLC shall be able to control discharge pressure from the ozone direct injection pump (P-700) by controlling FCV 707.
4. Communicate all alarms and initiate system shutdowns including, but not limited to, the following scenarios:
    a. Ambient ozone high (0.1 ppm) and high-high (0.2 ppm) alarms
    b. Ambient oxygen high (22.5%) and high-high (23.5%) alarms
    c. Various system faults from the PSA system, ozone generator, chiller, destruct unit, direct injection pump
    d. Triggering of high level setpoints in the ozone fine bubble diffuser columns
5. Initiate an OBACSS-defined safe shutdown sequence to avoid issues with off-gas, pressurization, etc.
6. Communicate with the Main CASSF PLC regarding system status and alarms from other systems requiring shutdown including, but not limited to, the following scenarios
    a. Shutdown of the AWP feed pump
    b. Level alarms from the ozone product tank
    c. Alarms requiring shutdown from other downstream processes

C. At a minimum, the ozone system OIT shall indicate all analog signals from instruments within the OBACSS ozone system scope of supply, in addition to the following:
    1. Ozone production rate (lb/day, calculated)
    2. Ozone dose (mg/L, calculated or user-defined)
    3. Influent TOC concentration (mg/L, from Main CASSF PLC)
    4. Influent and effluent ORP reading (mV, from main CASSF PLC)
    5. Influent and effluent UVT reading (%, from main CASSF PLC)
    6. Ozone CT (mg-min/L, from main CASSF PLC)
    7. Pathogen LRVs (virus, Giardia, Crypto)
    8. O3:TOC setpoint (mg/mg user-entered) or Cryptosporidium LRV setpoint (user entered)

D. The OBACSS shall provide a master BAC system PLC (with OIT screen) on the BAC tower skid that performs all monitoring and controls as specified in the BAC System Control Description (Specification Section 40 93 00) and the Drawings. The PLC

system shall adhere to the hardware and software requirements provided in Section 40 95 10 and Section 40 95 20.

E. The BAC system PLC shall:

1. Control BAC filter flowrate during filtration mode: BAC filter flows will be managed by the BAC system PLC by controlling the ozone effluent pump speed (P-750) and the influent control valves for each filter influent line (MOV 801 and MOV 811). Flow will be adjusted based on the readings from the filter effluent flow meters (FE/FIT 804 and FE/FIT 815).
2. Maintain water level within the BAC filter columns: Constant level in the BAC filters will be maintained by the PLC by managing the pressure differential across the filters (PDIT 80 and PDIT 810). Head will be managed via modulation of the filter effluent control valves (FCV 805 and FCV 815). Over the course of a weeklong filtration cycle, headloss will build and the filter effluent control valves will gradually open to maintain the water level within the BAC filters, as measured by the level indicators on each filter (LE/LIT 800 and LE/LIT 810).
3. Initiate hydraulic pauses: The BAC PLC system will have the ability to take a single filter offline for an operator-defined period of time and an operator-defined frequency (typically hourly pauses for 90 seconds). This allows dissolved gases to escape vertically through the filter bed. The system will not allow hydraulic pauses to occur during a backwash sequence
4. Control backwash and air scour: The BAC PLC system will initiate and control. The backwash sequence will consist of a three-stage sequential process consisting of filter draining, air scour, then backwash. The backwash sequence will occur on one filter at a time and shall not coincide with hydraulic pauses. The operator shall be able to define this sequence, including order and duration of each stage. The operator shall also be able to define air scour and backwash rates. The BAC PLC will receive level readings from the BAC backwash tank (retrieved from the MAIN CASSF PLC) and will only initiate a backwash with a sufficient BAC backwash tank volume. The backwash sequence shall be initiated on either filter by the following methods:
   a. Automatically, which shall be triggered by a high headloss from the differential pressure meters (PDIT 800 and PDIT 810). This terminal headloss shall be operator-adjustable.
   b. Automatically, which shall be triggered by a maximum filtration mode interval. This filtration interval shall be operator-adjustable.
   c. Automatically, based on effluent valve positions (FCV 805 and FCV 815). This effluent valve position shall be operator-adjustable.
   d. Manually, based on a command by the operator
5. Retrieve the following analyzer readings from the Main CASSF PLC:
   a. Ozone influent and BAC effluent TOC (AE/AIT 822)
   b. BAC influent UVT (AE/AIT 746), oxidation reduction potential (AE/AIT 747), turbidity (AE/AIT 748)
   c. BAC effluent UVT (AE/AIT 823) and turbidity (AE/AIT 821)

6. Communicate all alarms and initiate system shutdowns including, but not limited to, the following scenarios:
   a. High level setpoint in the BAC filters
   b. Faults from BAC system pumps and other ancillary equipment
7. Communicate with the master PLC regarding system status and alarms from other systems requiring shutdown including, but not limited to:
   a. Shutdown of the ozone process
   b. Level alarms from the ozone product tank
   c. Alarms requiring shutdown from other downstream processes

F. At a minimum, the BAC system OIT screen shall indicate all analog signals from instruments within the OBACSS BAC system scope of supply, in addition to the following:
   1. EBCT (min, calculated) and loading rate (gpm/ft2, calculated)
   2. Ozone influent and BAC effluent TOC (mg/L, from Main CASSF PLC)
   3. BAC influent and effluent UVT (%, from Main CASSF PLC)
   4. BAC influent oxidation reduction potential (mV, from Main CASSF PLC)
   5. BAC influent and effluent turbidity (NTU, from Main CASSF PLC)
   6. Filter status (filtration, hydraulic pause, backwash)
      a. When in hydraulic pause, which filter is paused and the time elapsed
      b. When in backwash, which filter is being backwashed and the stage and time elapsed for each process in the sequence
   7. System alarms

PART 3 - EXECUTION

3.01 OZONE SYSTEM WARRANTY

A. The OBACSS shall provide a standard workmanship and materials warranty for the ozone system, for a period of twelve (12) months from the date of completion of commissioning (i.e., completion of the Facility Acceptance Test). This standard workmanship and materials warranty shall apply to all work, materials, equipment, and products manufactured and incorporated by the OBACSS into the ozone system and shall warrant that these items are free from defects in material and workmanship when properly installed, maintained, and operated.

3.02 INSTALLATION, STARTUP, COMMISSIONING, TRAINING, AND OPERATIONS SUPPORT

A. The OBACSS shall perform start-up and commissioning activities in accordance with Sections 01 91 13 and 01 91 14.

B. Factory Acceptance Test
   1. Prior to shipping the Equipment to site, the OBACSS shall provide a Factory Acceptance Test at the OBACSS manufacturing facility. Prior to the Factory

Acceptance Test, a test plan shall be submitted by the OBACSS to the Contractor and Owner/OA per Section 01 91 14. The test plan must be submitted at least 60 days prior to the start of the Factory Acceptance Test. Factory Acceptance Testing must not begin until the test plan is approved by the Owner/OA . A copy of the factory test, including test results and dimensions shall be provided to the Contractor.

2. A minimum of one (1) representative from the Contractor or Owner/OA shall be present onsite to witness the Factory Acceptance Test. Travel costs and associated expenses shall be borne by the Contractor.
3. Factory functional testing shall be conducted on the following components:
   a. Oxygen generator
   b. Ozone generator and power supply
   c. Direct injection system
   d. Chiller
   e. Ozone destruct
   f. Fine bubble diffuser columns
   g. BAC backwash pump
   h. Air scour blower
   i. Ozone product pumps
   j. Actuated valves and flow meters
   k. Control panels
4. In addition to testing of the individual equipment detailed above, the Factory Acceptance Testing of the Ozone/BAC System shall include testing of the skidded systems in their entirety (i.e., the ozone generator skid/container and BAC tower skid).
   a. At a minimum, the Factory Acceptance Testing of the ozone generator skid/container shall include testing of the full hydraulic flow through the direct injection system, and complete testing of the operation of the system including demonstration of the maximum and turndown ozone doses (to both the direct injection system and fine bubble diffuser system), flow control, and ozone system PLC alarms.
   b. At a minimum, the Factory Acceptance Testing of the BAC tower skid shall include testing of the full hydraulic flow through the tower and complete testing of the operation of the system including flow control, level control (for both the BAC filters and fine bubble diffuser columns), automated and manual backwash sequences, off-gas collection from the fine bubble diffuser columns, hydraulic pauses, and BAC system PLC alarms. Note: BAC media will be installed onsite by the Contractor (i.e., not installed for Factory Testing).

C. Ozone/BAC System Installation

1. The OBACSS equipment shall be installed by the Contractor in accordance with Section 43 05 11.

2. The OBACSS shall submit erection drawings and installation instructions as specified or requested by the Contractor.
3. An OBACSS representative shall be present on site during the installation.
4. Before Functional Testing and Performance Testing, the OBACSS shall provide a factory trained field service representative to visit the site and certify that equipment has been installed, aligned, and checked in accordance with the Manufacturer's instructions and specifications.
5. Upon completion of equipment installation checks, the OBACSS shall submit to the Contractor written certification that all ozone equipment and accessory equipment associated with the Ozone/BAC System has been properly installed, is in good condition, is functioning properly, and is in accordance with the Contract Documents.

D. Functional Testing

1. The OBACSS and Contractor shall provide Functional Testing to demonstrate that all components are functional, operational, installed as specified, and perform their intended function.
2. 60 days prior to the onset of Functional Testing, a test plan shall be submitted for review by the Owner/Engineer per Section 01 91 14.
3. The OBACSS is responsible for providing a qualified representative to perform these tasks for the full duration of the Functional Testing period and in cooperation with the Contractor.
4. Functional Testing shall be conducted with dechlorinated potable water.
5. Functional Testing must demonstrate the ability of all Ozone/BAC System components to operate over the full range of capacity as designed, and shall include completion of all adjustments, tests, and tuning prior to the Performance Testing.

E. Performance Testing During Commissioning

1. The OBACSS and Contractor shall provide Performance Testing with the representative CASSF feedwater to demonstrate that the Ozone/BAC system can continuously meet specified performance requirements without fault, failure, or defect for a determined period of time.
2. The Performance Test is intended to confirm the ozone system meets the performance criteria.
3. The OBACSS is responsible for providing a qualified representative to perform these tasks in cooperation with the Contractor and they shall coordinate these activities with relevant parties. The OBACSS shall be onsite during testing for the complete seven (7) day period.
4. The OBACSS and Contractor shall submit a Performance Test Plan to the Owner/OA at least 60 days prior to testing for approval before testing can commence, as specified in Section 01 91 14.
5. The Performance Test shall include, but not be limited to, the verification of the following:

a. Demonstration of the turndown and maximum ozone doses to both the direct injection and fine bubble diffuser systems

b. Ozone dose turndown via ozone concentration and gas flow

c. Ozone direct injection flow measurement and flow control

d. Ozone dose pacing based on ozone:TOC ratio and ozone residual pacing for CT/LRV

e. Demonstration of minimum MTE via direct injection and fine bubble diffusion and residual stability

f. Fine bubble diffuser flow and level control

g. BAC filter flow and level control, including operation at both design EBCTs

h. BAC system automated and manual backwash sequences

i. Demonstration of full design range for backwash and air scour rates

j. BAC system hydraulic pauses

k. Demonstration of off-gas collection (e.g., no fugitive gas) and attainment of adequate ozone levels in destruct effluent gas

l. Start-up and shutdown sequences

m. System electrical components including electrical demand of the ozone generator skid/container components

n. Instrument calibration and consistent outputs

o. Trending of information

p. Interfacing with the Main CASSF PLC system

q. Alarms and system response to alarm conditions

6. The Ozone/BAC System Performance Test shall have a duration of 7 continuous days.

7. Refer to Section 01 91 14 for details on required actions in the event of system failures.

8. The OBACSS shall submit a report summarizing the results of the Performance Test to the Owner or OA.

F. Facility Acceptance Testing

1. Facility Acceptance Testing shall commence immediately following the completion of the individual unit process Performance Testing and includes the 7-day operational run of the completed systems to demonstrate that the facility can operate continuously as designed.

2. The OBACSS shall be available onsite for up to three (3) days during the Facility Acceptance Testing to offer support services during testing such as correction of faulty equipment operation, calibration, adjustment or correction of other flaws.

G. Training: Prior to the completion of the Facility Acceptance Testing, a thorough training by a qualified OBACSS representative shall be provided to the Owner/OA operations staff.

1. The OBACSS shall provide a minimum of three (3) full 8-hour business days of training at the project site.
2. The training shall be performed by the OBACSS on the design and operation of the equipment and systems proved and shall include (but is not limited to) the following, which shall include both “classroom” and “hands-on” training components:
    a. Ozone/BAC treatment overview
    b. Ozone/BAC System components
    c. Ozone/BAC System startup and shutdown
    d. Ozone/BAC System operations and maintenance
    e. Ozone/BAC System instrumentation and control equipment training
    f. Ozone/BAC System OIT and PLC training including alarm interpretation and response

H. Ongoing Operational Assistance:

1. During Year 1 of operation following commissioning, the OBACSS shall provide the following:
    a. General operations assistance including review of equipment operation, answering operator questions, and troubleshooting system errors
    b. Quarterly site visits to provide as-needed operational or maintenance support and/or data review
2. During Year 2 of operation following commissioning, the OBACSS shall provide the following:
    a. Yearly site visits to provide as-needed operational or maintenance support and/or data review

END OF SECTION

THIS PAGE INTENTIONALLY LEFT BLANK

SECTION 46 31 54
OZONE CONTACTOR

PART 1 - GENERAL

1.01 BACKGROUND

A. The ozone contactor system will consist of a serpentine pipeline with two (2) passes, each pass being 24 feet in length. The ozone contactor will be fed by ozonated water from the fine bubble diffuser system or side-stream injection system. The effluent from the contactor will flow into the ozone product tank and be pumped to the top of the biological activated carbon (BAC) filters. The ozone contactor is key to providing contact time for the ozone to react with organics and pathogens in the process flow.

B. The Ozone/BAC System provided by the Ozone/BAC System Supplier (OBACSS) includes the oxygen generator, ozone generator, direct injection system, chiller, destruct unit, fine bubble diffuser columns, ozone product pump, BAC filters, BAC backwash pump, and air scour blower, and two PLC units (one for ozone and one for BAC). Specification for this equipment can be found in Section 46 31 52.

C. The Contractor is responsible for the equipment and services to be provided under this Section, and shall include the following major components (herein, referred to as the Ozone Contactor System):
   1. Supply and installation of pipeline ozone contactor (with mounting/anchoring hardware)
   2. Supply and installation of flow straighteners
   3. Supply and installation of gas collection zone, water trap, air release valve, and off-gas piping
   4. Interconnecting piping for the ozone contactor feed and effluent
   5. Installation and integration of instrumentation and analyzers

D. Ozone Feed Water Quality: The feed water entering the ozone system will be nitrified-partially denitrified MBR filtrate with the characteristics listed below. The MBR filtrate will be chloraminated (via preformed chloramines) prior to the ozone system. A sodium bisulfite (SBS) dosing point will be included in the ozone system influent to provide the option to dechloraminate prior to the ozone process. The below list is not comprehensive of all constituents in the water and shall be used for ozone system sizing purposes only and not as a reference of system performance.

Parameter	**Units**	**Range in Ozone Influent**
Alkalinity	mg/L as $CaCO_3$	100 - 200
pH	pH units	6.6 – 7.0
Total Dissolved Solids (TDS)	mg/L	2,800 – 3,500
Temperature	°C	20 - 27
Turbidity	NTU	0.02 – 0.5

Parameter	Units	Range in Ozone Influent
Total Organic Carbon (TOC)	mg/L	4 - 14
UVT	%	65 – 75
Chloramines	mg/L Cl_2	0.0 – 3.0
Free Ammonia	mg/L N	0.03 – 1.0
Nitrite	mg-N/L	0.01 – 0.3
Nitrate	mg-N/L	2.8 – 26.7
Calcium	mg/L	93 – 102
Magnesium	mg/L	61 – 69
Bromide	mg/L	0.6 – 2.1
Iron	mg/L	0.05 – 0.1
Aluminum	mg/L	5.5 – 15.5
Manganese	mg/L	0.05 – 0.1

1.02 REQUIREMENTS

A. The ozone contactor shall be positioned between ozone generator skid/container and the BAC tower skid, both of which are provided by the OBACSS.

B. The ozone contactor must be installed at a slope of 1% (3 inches over the 24-foot length of the contactor) such that the feed and effluent ends of the contactor are elevated to promote collection of gas for the ozone off-gas collection and destruction system.

C. The total headloss across the ozone contactor shall not exceed 10 feet from the inlet of the 24-inch pipeline to the outlet of the 24-inch pipeline (including the flow straighteners).

D. All pipeline contactor system piping, including influent, effluent, and off-gas, shall be supplied and installed by the Contractor.

E. All mounting and anchoring hardware shall be supplied and installed by the Contractor.

F. The FBD system equipment, piping, and mounting hardware shall be designed for outdoor use.

1.03 SUBMITTALS

A. The Contractor shall submit a Performance Testing Plan for approval by the Owner and/or OA.

1.04 RELATED SECTIONS

A. Section 01 88 15: Anchorage and Bracing

B. Section 01 91 13: General Commissioning Requirements

C. Section 01 91 14: Testing and Startup

D. Section 09 90 00: Protective Coating

E. Section 40 05 06.16: Piping Connections

F. Section 40 05 60: Valves

G. Section 40 05 31: Thermoplastic Process Pipe

H. Section 40 93 00: Plant Control Philosophy

I. Section 40 91 12: Process Analyzer Measuring Systems

J. Section 46 31 52: Ozone/Biological Activated Carbon System

K. Section 43 41 48: XLHDPE Tanks

PART 2 - PRODUCTS

2.01 MINIMUM DESIGN CRITERIA

A. Components of the ozone contactor system include but are not limited to the following:

1. Pipeline ozone contactor (and anchoring/mounting hardware)
2. Flow straighteners
3. Interconnecting piping for the ozone off-gas and ozone contactor influent and effluent, including ozone product tank demister
4. Air release valves
5. Off-gas collection zone
6. Water trap
7. Installation of instrumentation and analyzers

B. The ozone contactor system shall meet the following design and performance criteria:

Parameter	**Units**	**Value or Range**
Design flowrate	gpm	148
Design TOC	mg/L	7.5
Ozone:TOC ratio	mg O3 /mg C	0.8-1.2
Maximum ozone dose	mg/L	10
Number of pipeline ozone contactors	No.	1 + 0
Diameter of pipeline ozone contactors	inch	24
Length of contactor passes	feet	24
Number of contactor passes	No.	2
Diameter of pipeline at turns	inch	8
Number of flow straighteners	No.	2
Design baffling factor	--	0.95

Parameter	Units	Value or Range
Minimum hydraulic residence time (HRT)	min	6.3

2.02 OZONE PIPELINE CONTACTOR

A. The Contractor shall provide one (1) serpentine pipeline ozone contactor per the details provided in the Drawings

B. The ozone contactor shall consist of two (2) passes, each pass being 24 feet in length. Ozone contactor feed shall enter the contactor on the south side, nearest the BAC tower skid. Ozone contactor effluent shall leave the contactor on the same side, nearest the BAC tower skid. The Contractor shall connect the effluent of the ozone contactor to the ozone product tank (TNK-740).

C. The ozone contactor shall consist of 24” schedule 40 PVC pipe and follow the piping specifications listed in Section 40 05 06.16 and Section 40 05 31. Any adhesives used for pipe joints shall be suitable for use with ozonated water at the concentrations expected (up to 10 mg/L).

D. The 180-degree ozone contactor turn shall include sections of 8” diameter schedule 80 PVC pipe and fittings and follow the piping specifications listed in Section 40 05 06.16 and Section 40 05 31.

E. The ozone contactor shall be installed and anchored to a concrete pad per the requirements listed in Section 43 05 11 and the details provided in the drawings.

F. The ozone contactor shall achieve a baffling factor of 0.95 and a minimum design hydraulic residence time (HRT) of 6.3 min.

G. Assuming 20-foot maximum available lengths for PVC pipe, the Contractor must field-verify a suitable location to place the 24” PVC pipe coupling to create a total run length of 24 feet. The coupling must not interfere with the saddle tee used for the off-gas collection zone on the influent side of the contactor (per the details provided in the Drawings). Any adhesives used for pipe joints shall be suitable for use with ozonated water at the concentrations expected (up to 10 mg/L).

H. The ozone contactor pipeline must be installed with a 3” height difference between the south end (where the influent and effluent connections are, nearest to the BAC tower skid) and north end (where the 180 deg turn is) of the contactor. The south end must be 3” higher than the north end to promote off-gas collection. This equates to an approximate slope of 1%.

I. The Contractor shall provide a total of six (6) sampling ports on the ozone pipeline contactor, suitable for grab samples and connection to the dissolved ozone analyzers (AE/AIT 741, AE/AIT 744, AE/AIT 745). These sample ports shall be located as indicated on the Drawings.

2.03 FLOW STRAIGHTENERS

A. The Contractor shall furnish and install two (2) flow straighter assemblies for the ozone contactor, per the details provided in the drawings.

B. A flow straightener shall be installed at each of the following locations within the contactor:
   1. The beginning of the 24” contactor pipeline where the influent enters the contactor.
   2. The beginning of the second 24’ pass of 24” contactor pipeline, after the 180-degree turn.

C. Per the details provided in the drawings, the flow straighteners shall consist of the following components listed in order of flow direction:
   1. Eight (8) 3/4”-10 316 stainless steel hex nuts (to fasten 8” flange to 24” blind flange)
   2. Eight (8) 3/4”-10 316 stainless steel flat washers (to fasten 8” flange to 24” blind flange)
   3. 8” Van Stone flange, schedule 80 PVC (connecting 8” feed pipe to contactor)
   4. 8” Viton flange gasket, 1/8” thickness (between 8” Van Stone flange and 24” blind flange, on the outside of contactor)
   5. 24” blind flange with 8” flange drilling on center, schedule 80 PVC (Serving as the end fitting of the 24” contactor pass)
      a. Note: it is acceptable to custom fabricate this blind flange from a schedule 80 PVC sheet, with 24” flange drillings and 8” flange drillings on center
      b. 24” custom fabricated blind flange must be smooth (i.e., no grooves on either side of flange face), or machined to the specifications of standard 24” PVC flanges
   6. 24” Viton flange gasket, 1/8” thickness (Between 24” blind flange and 24” Van Stone flange)
   7. 8” Viton flange gasket, 1/8” thickness (between 24” blind flange and 8” diffuser pipe, on the inside of contactor) (to connect 24” blind flange to 8” diffuser pipe)
   8. 8” Van Stone flange, schedule 80 PVC
   9. 8” PVC diffuser pipe with cap, 12” in total length
      a. 8” PVC diffuser pipe must include two (2) rings of eight (8) 1-1/8” holes drilled around the circumference of the pipe, 16 holes total.
      b. Each ring of eight (8) 1-1/8” holes shall be spaced by approximately 45 deg around the circumference of the 8” diffuser pipe. The two rings of drilled 1-1/8” holes shall be offset from one another by approximately 45 deg.
      c. Each ring of eight (8) 1-1/8” holes shall be spaced by approximately 1” along the length of the 8” diffuser pipe. The total length of the 8” diffuser pipe shall be approximately 6”. Sufficient spacing shall be provided to connect flange and cap.
      d. The end of the 8” diffuser pipe shall include a cap with a 1.5” diameter Type 1 rigid PVC rod secured to the center of the cap with PVC cement Weld-On 711 or approved equal. The total length of the 1.5” PVC rod shall extend 6” from the top of the cap. Perforations must be done with drill bits (no hole saw allowed).
   10. Two (2) ¼” thick perforated PVC plates cut into 22” rounds
      a. The PVC plates shall be ¼” thick with ¼” holes on ½” centers (approximately 20% open area)
      b. The PVC plates shall be cut to fit within the inner diameter of the 24” schedule 40 contactor pipe (approximately 22” diameter)
      c. Once cut to size, the two (2) perforated PVC plates shall be attached to the 1.5” diameter PVC rod using PVC cement Weld-On 711 or approved equal.,

with 2” spacing between plates. Perforations must be done with drill bits (no hole saw allowed).

11. Eight (8) 3/4”-10 316 stainless steel flat washers (to fasten 8” flange to 24” blind flange, on the inside of contactor)
12. Eight (8) 3/4”-10 x 6-1/2” stainless steel hex bolts (to fasten 8” flange to 24” blind flange, on the inside of contactor)
13. Note: all components of the flow straightener shall be glued and/or welded to withstand the force exerted by the pipeline contactor flow
14. Any adhesives used for pipe joints shall be suitable for use with ozonated water at the concentrations expected (up to 10 mg/L).

2.04 OFF-GAS COLLECTION COMPONENTS

A. The Contractor shall supply and install all of the components of the off-gas collection system on the ozone pipeline contactor, including the following (per the details included in the Drawings):

1. Influent off-gas collection zone, components from bottom to top:
   a. One (1) 24” x 8” schedule 40 PVC tee connected to 24” ozone pipeline contactor
   b. One (1) 8” diameter x 12” long section of schedule 80 PVC pipe
   c. One (1) 8” schedule 80 PVC Van Stone flange
   d. One (1)8” schedule 80 PVC blind flange with connection to 1” stainless steel off-gas valve and piping and manifold
   e. Any adhesives used for pipe joints shall be suitable for use with ozonated water at the concentrations expected (up to 10 mg/L).
2. Liquid Air Reservoir (Water trap), components from bottom to top:
   a. 8” schedule 80 PVC blind flange
   b. 8” schedule 80 PVC Van Stone flange
   c. 8” schedule 80 PVC, total length approximately 5 feet (length shall be field verified by Contractor to align with elevation of off-gas piping)
   d. Drain and vent ports with manual ball valve shall be included at the top and bottom of the 8” schedule 80 PVC pipe
   e. 8” schedule 80 PVC cap with connection to 1” stainless steel off-gas piping
   f. Any adhesives used for pipe joints shall be suitable for use with ozonated water at the concentrations expected (up to 10 mg/L).

2.05 OZONE CONTACTOR SAMPLE PUMPS (P-752, P-753, P-754, P-755)

A. The Contractor shall supply and install a total of four (4) ozone contactor sample pumps to minimize travel time between the sample taps and the analyzer panels.

1. Ozone contactor sample pump No. 1 (P-752) will be connected from sample tap 1 to ozone contactor analyzer panel No. 1.
2. Ozone contactor sample pump No. 2 (P-753) will be connected from sample tap 2 or 3 to ozone contactor analyzer panel No. 2.
3. Ozone contactor sample pump No. 3 (P-754) will be connected from sample tap 4, 5, or 6 to ozone contactor analyzer panel No. 1.
4. Ozone contactor sample pump No. 4 (P-755) will be connected from the 4” ozone contactor effluent line (to the ozone product tank) to the ozone product analyzer panel.

B. All ozone contactor sample pumps shall be 120V, single-phase, and rated for continuous duty and outdoor use. All wetted parts shall be compatible with a solution of up to 10 mg/L dissolved ozone. Pumps may be peristaltic, diaphragm, or centrifugal. Each pump shall be capable of achieving a flow of 0.5 gpm at 12 feet of head.

2.06 INTERCONNECTING PIPING

A. The Contractor shall supply and install all interconnecting piping to the ozone contactor (per the Drawings) including:

5. Ozone contactor feed piping from both dissolution systems (direct injection and fine bubble diffusers) to the contactor
6. Ozone contactor effluent piping from the contactor to the ozone product tank. Any adhesives used for pipe joints shall be suitable for use with ozonated water at the concentrations expected (up to 10 mg/L).
7. Ozone off-gas piping collected from each of the two (2) contactor passes to the ozone product tank and from the ozone product tank to the destruct unit, including installation of degassing valves and ball valves as shown on the Drawings.
   a. Off-gas piping shall be 1” diameter, 316 stainless steel
   b. Off-gas piping must be installed with no low spots prior to the water trap
   c. Degassing valves shall be sized with a 1/8” orifice to achieve the desired pressure differential (1 psi) and venting capacity (>1 SCFM)
   d. One (1) degassing valve shall be installed on each vertical run of off-gas piping from the contactor. Two (2) total.

B. The Contractor shall also supply a total of six (6) ¼” sample taps from the ozone contactor, per the locations identified in the drawings.

C. The Contractor shall also supply a demister unit on the off-gas piping leaving the ozone product tank. The demister unit must be installed vertically to allow collected liquid to drain back to the ozone product tank.

D. All equipment listed in this section shall conform to the specifications listed in Section 40 05 06.16 and Section 40 05 31.

E. Sample line piping between the sample taps, ozone contactor sample pumps, and dissolved ozone analyzers (AE/AIT 741, AE/AIT 744, AE/AIT 745). Additionally, sample line effluent pi;ing shall be routed to the ozone product tank (TNK-740). Any adhesives used for pipe joints shall be suitable for use with ozonated water at the concentrations expected (up to 10 mg/L).

2.07 INSTRUMENTATION AND CONTROL

A. In accordance with the analyzer specifications in Section 40 91 12 and the details provided in the Drawings, the Contractor shall furnish and install the following:

8. Three (3) dissolved ozone analyzers for the ozone contactor, as shown in the Drawings (AE/AIT 741, AE/AIT 744, AE/AIT 745). One (1) of the dissolved ozone analyzers shall be configured to measure and transmit readings for the ozone contactor water temperature to also be used in the CT calculations by the Main CASSF PLC.

B. The Contractor shall be responsible for installing and wiring this equipment as well as

integrating this equipment into the Main CASSF PLC per Section 40 93 00.

PART 3 - EXECUTION

3.01 INSTALLATION, STARTUP, COMMISSIONING

A. Installation
   1. All ozone contactor equipment described in this section shall be installed by the Contractor.
   2. All equipment shall be mounted and installed according to the anchorage requirements in Section 43 05 11.

B. Functional Testing
   1. The Contractor shall provide Functional Testing in accordance with Section 01 91 14
   2. Functional Testing shall not begin until a test plan is submitted 60 days prior to testing and is approved by the Owner/OA.
   3. The purpose of the pre-commissioning testing is to ensure that the contactor components are functional, operational, installed as specified, and perform their intended function.
   4. Functional Testing shall be conducted with dechlorinated potable water.
   5. Functional Testing should last no longer than 30 days.

3.02 PERFORMANCE TEST DURING COMMISSIONING

A. The Contractor shall provide Performance Testing in accordance with Section 01 91 14.

B. Performance Testing is required to demonstrate that the ozone contactor can continuously meet specified performance requirements without fault, failure, or defect for a determined period of time.

C. The Contractor shall submit a Performance Test Plan to the Owner/OA at least 60 days prior to testing for approval before testing can commence.

D. The Performance Test shall include, but not be limited to, the verification of the following:
   1. Hydraulic residence time (HRT)
   2. Baffling factor
   3. Headloss
   4. Dissolved ozone measurements
   5. Interfacing with the Main CASSF PLC system

E. The Performance Test shall have a duration of 7 continuous days

F. Refer to Section 01 91 14 for details on required actions in the event of system failures

G. The OBACSS shall submit a report summarizing the results of the Performance Test to the Owner or OA. Acceptance of this report will signify the completion of the

commissioning test and the acceptance of the ozone system.

H. The Contractor shall submit a report summarizing the results of the Performance Test to the Owner. Acceptance of this report will signify the completion of the commission test and the acceptance of the ozone contactor system.

END OF SECTION

THIS PAGE INTENTIONALLY LEFT BLANK

SECTION 46 33 42.16
HYDRAULICALLY DRIVEN DIAPHRAGM PUMPS

PART 1 GENERAL

1.01 DESCRIPTION

A. Scope: The section specifies positive displacement, hydraulically actuated, diaphragm metering pumps and associated appurtenances for chemical feed service in water and wastewater treatment applications. The pumps shall be supplied by the RO System Supplier as part of the RO System.

B. Type: Metering pumps shall be of the positive displacement, hydraulically-actuated diaphragm type. Pumps shall operate at variable stroke lengths from 0 - 100% with automatic, electronic adjustment. Pump output shall be rated at design operating temperature and be adjustable while the pump is operating. Pumps shall be simplex (single pump head) design. The equipment Suppler shall furnish and install complete chemical metering systems with associated pump supports, controls, appurtenances and miscellaneous equipment to provide an operating installation as shown or otherwise specified. The pump shall be suitable for the intended metering service with adjustable speed controls as required to provide the degree of dosing control described herein. Metering pumps shall be fully waterproof and suitable for installation outdoors or in wet processing areas.

C. Equipment List:

Equipment Description	Equipment Number
Sulfuric Acid Feed Pump 1	P-1441
Sulfuric Acid Feed Pump 2	P-1444
Sulfuric Acid Feed Pump 3	P-1446
Sulfuric Acid Feed Pump 4	P-1447
Antiscalant Feed Pump 1	P-1631
Antiscalant Feed Pump 2	P-1632
Antiscalant Feed Pump 3	P-1633
Antiscalant Feed Pump 4	P-1634

D. Performance and Design Requirements:

1. Service Conditions:

a. The metering pumps and associated equipment specified in this section shall be designed and selected for pumping the following chemical solutions:

Chemical	pH	Solution Density (pounds per gallon @ 68° F)	Concentration Percent (wt/wt)
Sulfuric Acid	<1	15.26	93%
Antiscalant		10.4	100%

2. Operating Requirements:
   a. The metering pump(s) shall be designed for continuous service under the following design and operating conditions.

Equipment Number(s):	P-1441, P-1444, P-1446, P-1447	
Parameter	Design Value	Units
Minimum chemical feed rate	0.002	gph
Average chemical feed rate	0.04	gph
Maximum chemical feed rate	0.27	gph
Operating pressure	60	psi
Maximum Static Lift	-5	ft
Maximum motor size	0.5	hp
Power supply	120/60/1	V/Hz/phase

Equipment Number(s):	P-1631, P-1632, P-1633, P-1634	
Parameter	Design Value	Units
Minimum chemical feed rate	0.00004	gph
Average chemical feed rate	0.001	gph
Maximum chemical feed rate	0.011	gph
Operating pressure	60	psi
Maximum Static Lift	-5	ft
Maximum motor size	0.5	hp
Power supply	120/60/1	V/Hz/phase

1.02 QUALITY ASSURANCE

A. References:
   1. This section contains references to the following documents. They are a part of this section as specified and modified. Where a referenced document contains references to other standards, those documents are included as references under this section as if referenced directly. In the event of conflict between the requirements of this section and those of the listed documents, the requirements of this section shall prevail.
   2. Unless otherwise specified, references to documents shall mean the documents in effect at the time of Advertisement for Bids or Invitation to Bid (or on the effective date of the Agreement if there were no Bids). If referenced documents have been discontinued by the issuing organization, references to those documents shall mean the replacement documents issued or otherwise identified by that organization or, if there are no replacement documents, the last version of the document before it was discontinued. Where document dates are given in the following listing, references to those documents shall mean the specific document

version associated with that date, regardless of whether the document has been superseded by a version with a later date, discontinued or replaced.

Reference	Title
ASTM A743/A743M	Castings, Iron-Chromium, Iron-Chromium-Nickel, and Nickel-Base Corrosion-Resistant for General Application
NEMA MG 1	Motors and Generators
NEMA ICS 1	Industrial Control and Systems General Requirements

B. See Section 01 45 33 for additional requirements.

C. Submittals:
   1. The following submittals shall be provided as specified in Section 01 33 00:
      a. Shop drawings with complete dimensions and mounting details for the pumps and all appurtenances.
      b. Catalog data and information including:
         1) Maximum and minimum capacity using adjustable speed drive, gph; maximum and minimum operating speed, rpm; and discharge pressure.
         2) Motor information.
      c. Materials of construction.
      d. Net positive suction head required.
      e. Manufacturer's wiring diagram.
      f. Manufacturer's catalog data on all accessories including pressure regulating valves, pressure relief valves, chemical seals, pressure gauges, calibration chambers, pulsation dampeners, and suction assemblies.
      g. A copy of the contract document control diagrams and process and instrumentation diagrams relating to the submitted equipment, with addendum updates that apply to the equipment in this section, marked to show specific changes necessary for the equipment proposed in the submittal. If no changes are required, the drawing or drawings shall be marked "no changes required". Failure to include copies of the relevant drawings with the submittal shall be cause for rejection of the entire submittal with no further review.
      h. A copy of this specification section, with addendum updates included, and all referenced and applicable sections, with addendum updates included, with each paragraph check-marked to indicate specification compliance or marked to indicate requested deviations from specification requirements. Check marks (□) shall denote full compliance with a paragraph as a whole. If deviations from the specifications are indicated and, therefore requested by the Contractor, each deviation shall be underlined and denoted by a number in the margin to the right of the identified paragraph. The remaining portions of the paragraph not underlined shall signify compliance on the part of the Contractor with the specifications. The submittal shall be accompanied by a detailed, written justification for each deviation. Failure to include a copy of the marked-up specification sections, along with justification(s) for any requested deviations

to the specification requirements, with the submittal shall be sufficient cause for rejection of the entire submittal with no further consideration.

i. A copy of all related contract schematic, structural, and mechanical drawings with all piping, foundations, supports, and layout sizes and dimensions requiring Contractor confirmation marked.

j. Certificate of Unit Responsibility attesting that the Contractor has assigned, and that the manufacturer accepts, unit responsibility in accordance with the requirements of this Section and Section 43 05 11-1.02 Unit Responsibility. No other submittal material will be reviewed until the certificate has been received and found to be in accordance with these requirements.

k. Operations and Maintenance Information per Section 01 78 23 – OPERATION AND MAINTENANCE DATA.

D. Unit Responsibility:

1. Assign unit responsibility, as specified in Section 43 05 11, to the metering pump manufacturer for the pumps, accessory components, mounting panels and control systems, necessary for proper equipment operation in accordance with the Control Strategy descriptions contained in Division 40 and associated Process and Instrumentation drawings. Provide a completed and signed certificate of unit responsibility (Section 01 99 90-Form 43 05 11-C).

PART 2 PRODUCTS

2.01 GENERAL

A. The manufacturer shall furnish all metering pump equipment to complete a properly functioning, integrated package. Unless otherwise specified, the metering pump system shall be factory assembled to the maximum extent possible. Factory assembly shall include all pumps, motors, bases, and appurtenant valves and fittings. Any components that are not factory assembled shall be shipped loose and packaged and labeled with complete instructions for field installation. No field welding shall be required.

B. The metering pump assembly shall be designed by the manufacturer to provide the necessary strength, stability, and stiffness for the intended application conditions. Equipment, piping, valves and controls shall be rigidly and accurately anchored to a support structure in the proper position and arrangement and to optimize access for maintenance. The support structure and mounting hardware shall be compatible with the chemicals being metered (corrosion-resistant), and shall be non-metallic unless otherwise specified.

2.02 ACCEPTABLE PRODUCTS

A. Hydraulically-driven diaphragm metering pumps shall be as manufactured by Grundfos, Milton Roy, Pulsafeeder, or approved equal.

2.03 METERING PUMPS

A. Hydraulically-actuated metering pumps furnished under this Section shall be non-lost motion disc diaphragm pumps employing an amplitude modulation stroke adjustment mechanism to produce a smooth sinusoidal output at all stroke length settings. The pumps shall be driven by a variable speed AC motor to actuate a disc diaphragm. The pump shall be of the hydraulically balanced diaphragm type wherein a volume measuring piston reciprocates within a cylinder and uses hydraulic oil to deflect a flat diaphragm. The diaphragm shall be a Teflon-faced composite design with molded-in integral seal bead.

B. Pumps shall be corrosion resistant with diaphragm and seals suitable for the pumped chemicals specified up to a minimum temperature of 125 degree F. Pumps shall be suitable for metering service, with an adjustable stroke control range of 10:1 of the full range. Variable speed drives shall have a speed range of at least 10:1, which, in conjunction with stroke control, shall provide a minimum total feeding range of 100:1.

C. Metering pump drive shall be either a polar crank or variable eccentric crank design. The drive housing shall be heavy-duty design of cast iron construction coated with powder applied epoxy. The gearbox shall be totally enclosed with all moving parts lubricated by bath-splash lubrication. The motor shall be coupled to the gearbox with a NEMA C face flange adaptor.

D. The liquid end shall be designed to provide easy access for maintenance and integral sight flow indication. The seal shall be a molded integral seal bead. The diaphragm assembly shall have a minimum design life of 45,000 operating hours at rated conditions. The liquid end shall be manufactured of Alloy 20 unless otherwise specified. Check valves shall be single ball cartridge type manufactured of Alloy 20. Valve retainers shall be clear PVC and shall compression seal to the pump head and pipe connectors using o-rings or flat washers, but not springs. Valves shall be easily serviced without impacting the remainder of the pump head.

E. The diaphragm shall be Teflon-faced, fabric reinforced and bonded to preformed elastomeric support and have a molded integral seal bead. The liquid end shall be furnished with a mechanically actuated refill system that allows the pump to operate under completely dry or starved suction conditions maximum capacity setting and maximum internal relief valve setting without damage to the diaphragm or pump. The refill system shall allow the pump to operate at a minimum internal fluid pressure of 3 psia. The diaphragm shall be returned to its rear suction position by hydraulic forces alone without mechanical assist.

F. The pump liquid end shall be furnished with an internal safety relief valve to limit pump discharge pressure capacity. The relief valve shall return hydraulic fluid to the pump reservoir and shall be adjustable. The valve shall set at 50 percent over the external backpressure valve setting or 100 psi, whichever is greater. The pump liquid end shall be furnished with a means to view hydraulic relieving conditions of the internal relief valve system without opening the hydraulic chamber housing access cover.

G. The stroke adjustment mechanism shall be steel and nodular iron housed in an epoxy-

coated, cast iron gearbox. All drive bearings shall be tapered rollers and fasteners shall be stainless steel. The gearbox shall be oil-bath lubricated. Stroke length shall be controlled automatically via stepper motor with a 10-turn micrometer with vernier indication of stroke length in 0.25 percent increments. Feed rate shall be infinitely adjustable from 0 through 100 percent with each revolution of the knob changing stroke length by 10 percent. Repeatable metering accuracy of +/- 1 percent of actual set flow rate is required at constant hydraulic conditions. Materials of Construction:

1. Sulfuric Acid:
   a. Pump Head: Alloy 20
   b. Pump Diaphragm: Compression molded Teflon or composite Teflon. Diaphragm seal shall be integral o-ring type
   c. Check Valves and Seats: Alloy 20
   d. O-rings: PTFE
2. Antiscalant:
   a. Pump Head: Type 316 Stainless Steel
   b. Pump Diaphragm: Compression molded Teflon or composite Teflon. Diaphragm seal shall be integral o-ring type
   c. Check Valves and Seats: Type 316 Stainless Steel
   d. O-rings: PTFE

2.04 PUMP MOTORS, DRIVES AND CONTROLS

A. Motors:
   1. Type: Inverter duty, AC
   2. Size: 1/2 hp, minimum
   3. Constant Torque Speed Range: 1000:1
   4. Service Factor: 1.0
   5. Enclosure: TENV
   6. Mount:
      a. Arranged for vertical mounting of a C-face motor. The mounting arrangement shall eliminate exposure to rotating couplings. The coupling enclosure shall be totally enclosed and part of the motor mounting assembly
   7. Accessories:
      a. Tachometer:
         1) Each motor shall be equipped with a shaft-mounted pulse tachometer.
         2) Provide manufacturers cable for termination to the pump control panel/drive in the field.
   8. Manufacturers
      a. Marathon Electric, MicroMAX
      b. Baldor
      c. Or approved equal

B. Variable Speed Drives:

1. Type:
   a. AC PWM Inverter with software selection for Vector or General Purpose operation. Drive shall be initially set for Vector duty to maintain torque and accurately regulate speed to within 0.1 percent with the motor tachometer using closed loop control.
2. Drive shall be equipped with a face mounted keypad for adjusting drive parameters with interface to control panel mounted controls for start/stop, local-off-remote, manual speed regulation, and speed indication as specified herein. Integral drive parameters shall include:
   a. Run/Jog
   b. Auto/Manual
   c. Forward/Reverse
   d. Output voltage display
   e. Current amps display
   f. kW display
   g. Elapsed time display
   h. Torque display
   i. Signal Interface
3. In AUTO mode, the drive shall start and stop based on a control signal from the PLC indicated on the Drawings, with speed regulation based on an analog input signal (4-20 mA).
4. Provide the following drive status outputs:
   a. Drive controller in AUTO mode, SPST dry contact rated 5A at 120 VAC.
   b. Drive controller ON, SPST dry contact rated 5A at 120 VAC.
   c. Drive controller FAIL, SPST dry contact rated 5A at 120 VAC.
   d. Drive controller SPEED, analog output signal, 4 – 20 mA dc.
5. Alarm signals:
   a. Each drive shall accept a minimum two shutdown signals. When either signal is energized, the drive shall shutdown via hardwired latching time delay control circuits, independent of control mode.
   b. Provide SPDT dry contact for each alarm output, rated 5A at 120 VAC.
   c. Discrete input signals from the PLC shown on the Drawings will be 24 VDC. Provide any interposing relays required to interface with the specified panel control circuits.
6. Manufacturer
   a. Allen Bradley Powerflex 525 AC Drive
   b. Or approved equal

C. Control Panels:
   1. Each metering pump shall be furnished with a NEMA 4X control enclosure of Type 316 stainless steel construction housing the VFD controller and related accessories.

2. Power supply to the panels shall be single phase, 120 VAC.
3. Door mounted components shall include the following as a minimum:
   a. Drive controller HAND-OFF-AUTO selector switch.
   b. Power ON-OFF switch.
   c. An alphanumeric LED pump speed display, in units of 0 – 100% speed.
   d. A manual pump speed control knob or pushbuttons, for manually adjusting controller speed from the panel face in the ON operating mode.
   e. A motor ON indicator light.
   f. An alarm RESET pushbutton.
   g. FAIL and HIGH PRESSURE alarm annunciation lights.
4. Internal components shall include the following as a minimum:
   a. Dry type power transformer.
   b. VFD drive controller and related accessory components.
   c. Terminal blocks for interfacing all field wiring.
   d. Time delay relays.
   e. Interposing control relays.
5. Panel construction, components, and wiring shall comply with the requirements of Sections 26 05 00 and 40 92 00.

2.05 ACCESSORIES

A. The following accessories shall be provided by the manufacturer having unit responsibility:
   1. Calibration Columns:
      a. Calibration columns shall be furnished where shown and shall be of clear PVC or Glass (for sulfuric acid) construction, graduated in both gph and milliliters. Columns shall be at least 100 ml in size or to allow 2 minutes of testing at the maximum pumping capacity of the system, whichever is smaller.
      b. Contractor shall install vent piping to a level above the maximum storage tank level to prevent overflow. Include a turndown on the vent pipe to prevent the ingress of dirt and debris. Vent pipe materials shall match the materials of low pressure piping for the system. Include support of the vent pipe as needed to prevent sway.
   2. Back Pressure and Pressure Relief Valves:
      a. Backpressure valves shall apply a continuous discharge back pressure downstream of the metering pumps and also serve as anti-siphoning valves. Valves shall be capable of closing without an external source of pressure. The valve shall maintain a constant upstream pressure higher than the downstream injection pressure. When the pressure on the upstream side of valve reduces below the set pressure, the valve shall close, eliminating siphoning into the process line and/or back-mixing in the injection line. It shall also maintain pressure upstream of the valve following pump shutdown. Pressure setting shall be externally adjustable between 0 and 150 psig via a top mounted adjustment screw.

b. Pressure relief valves shall be installed as shown and relieve pressure on the injection line. Valves shall be internal spring actuated diaphragm type, 3 port design. Valves shall be capable of closing without an external source of pressure. Relief pressure setting shall be externally adjustable between 0 and 150 psig via a top mounted adjustment screw.

c. Materials of Construction:

1) Body: Alloy 20 (Sulfuric Acid); CPVC (Threshold Inhibitor).

2) Top (unwetted): Type 316 stainless steel (Sulfuric Acid); CPVC (Threshold Inhibitor)

3) Diaphragm: PTFE faced EPDM

d. Manufacturer: Griffco or approved equal

3. Relief Line Flow Indicators:

a. Pumps shall be supplied with a visual flow indicator installed in the relief valve exhaust line.

b. The indicator shall be of double wall construction with a Pyrex inner cylinder, plexiglass outer cylinder, and stainless steel fasteners. Flow indication shall be accomplished visually without the use of internal streamers or other moving parts.

c. Process Connections: 1/2-inch FNPT.

d. Port Materials: PTFE with Viton seals.

e. Manufacturer: Plastomatic Series GY or approved equal

4. Chemical Seals and Pressure Gauges:

a. Chemical seal assemblies and pressure gauges shall be as specified in Division 40.

2.06 SPARE PARTS AND SPECIAL TOOLS

A. Spare parts and special tools required for maintenance of the pumps and accessory items shall be provided. One complete set of necessary spare parts, as recommended by the manufacturer, including seals, diaphragms, check valve assemblies, valve seats, and other parts subject to wear, for each pump.

PART 3 EXECUTION

3.01 GENERAL

A. Pumps shall be aligned, connected, and installed in strict accordance with the manufacturer's instructions.

3.02 INSTALLATION

A. The equipment shall be installed and tested under the direction of factory trained personnel as specified in Section 43 05 11. The installation shall be certified on Form 43 05 11-A specified in Section 01 99 90.

3.03 TESTING

A. After installation, the equipment specified in this section shall be completely tested to ensure compliance with operating requirements, varying pumps speeds with speeds and flows recorded in a test log. Pump systems shall initially be tested with clean water and then the chemical to be pumped. Field testing shall be in accordance with the testing procedures in Sections 01 91 13 and 01 91 14. Testing shall verify the control strategies specified in Division 40.

B. Following successful testing and commissioning of associated control loops, and prior to pumping chemical solution, the pump and chemical piping shall be emptied and dried. Piping in the sulfuric acid system shall be dried with compressed nitrogen.

3.04 TRAINING

A. Training, as specified in Section 01 91 13, shall be provided. Training shall be certified on Form 43 05 11-B specified in Section 01 99 99.

B. Provide 2 hours of training.

END OF SECTION

SECTION 46 33 44
PERISTALTIC METERING PUMPS

PART 1 GENERAL

1.01 DESCRIPTION

. Scope: This section specifies pumps and accessories for feeding various chemical solutions.

A. Type: The metering pumps shall be of positive displacement, peristaltic type utilizing a flexible tube and spring loaded roller or track. The pump shall be suitable for metering service with adjustable speed drives to control the dosage with accuracy of one percent variation from the pump setting. Each pumping unit shall be complete with pump, drive unit, base, and all appurtenances to provide a complete pumping system for the specific process fluids and design characteristics as specified herein.

B. Equipment List:

Equipment Description	Equipment Number	Supply Scope
AMM PFC Feed Pump 1	P-1340	Contractor
AMM PFC Feed Pump 2	P-1345	Contractor
AMM PFC Feed Pump 3	P-1350	Contractor
AMM PFC Feed Pump 4	P-1355	Contractor
AMM SV UV/AOP and Murray UV/AOP Feed Pump	P-1365	Contractor
CS PFC Feed Pump 1	P-1611	Contractor
CS PFC Feed Pump 2	P-1612	Contractor
CS PFC Feed Pump 3	P-1613	Contractor
CS PFC Feed Pump 4	P-1614	Contractor
CS BNR Aerobic Zone Feed Pump 1	P-1615	Contractor
CS BNR Aerobic Zone Feed Pump 2	P-1616	Contractor
CS to MF CIP & RO CIP for citric acid neutralization	P-1603	Contractor
CTA MF & SV RO CIP Transfer Pump	P-1560	Contractor
CTA MBR CIP Transfer Pump	P-1545	Contractor
SBS Ozone Influent and Effluent Feed Pump 1	P-1505	Contractor
SBS Ozone Influent and Effluent Feed Pump 2	P-1510	Contractor
SBS MF Cleaning / RO Flush Neutralization Transfer Pump	P-1525	Contractor
SHC PFC Feed Pump 1	P-1421	Contractor
SHC PFC Feed Pump 2	P-1422	Contractor

Equipment Description	Equipment Number	Supply Scope
SHC PFC Feed Pump 3	P-1423	Contractor
SHC PFC Feed Pump 4	P-1424	Contractor
SHC UV / AOP Murray Feed Pump 1	P-1425	Contractor
SHC UV / AOP Murray Feed Pump 2	P-1426	Contractor
SHC UV / AOP SV Feed Pump 1	P-1427	Contractor
SHC UV / AOP SV Feed Pump 2	P-1428	Contractor
SHC MF EFM/TMC & CIP Transfer Pump	P-1404	Contractor
SHC MBR MC / CIP Feed Pump	P-1405	Contractor
ACOH BNR Feed Pump 1	P-1310	Contractor
ACOH BNR Feed Pump 2	P-1315	Contractor

C. Performance and Design Requirements:

1. General:

   a. The metering pumps and equipment shall be designed and selected for pumping the following chemical solution[s]:

Chemical	Solution Density[1]	Concentration (wt/wt)
Ammonium Sulfate (LAS)	10.26	38.0-40.0%
Sodium Hydroxide (NAOH)	10.69	25.0%
Citric Acid (CAC)	13.89	50%
Sodium Bisulfite (SBS)	9.51	38%
Sodium Hypochlorite (NAOCL)	8.76	12.5%
Acetic Acid (ACOH)	8.86	56%

[1] Solution density, lb per gal @ 68 degrees F

   b. Pump operation shall be automatic from input signal from vendor packages. Adjustable speed drives, if used shall be controlled by a 4-20 mA signal.

2. Design Requirements:

   a. The metering pumps shall be designed for continuous duty under the following operating conditions:

Equipment Numbers:	P-1340, P-1345, P-1350, P-1355	
Parameter	Design Value	Units
Minimum chemical feed rate	0.0026	gph
Average chemical feed rate	0.048	gph
Maximum chemical feed rate	0.211	gph
Operating pressure	30	psi

Equipment Numbers:	P-1340, P-1345, P-1350, P-1355	
Parameter	Design Value	Units
Maximum discharge pressure	100	psi
Maximum power consumption	TBD	hp or VA
Maximum rotor speed	TBD	rpm
Power supply	120/60/1	V/Hz/phase]

Equipment Numbers:	P-1365	
Parameter	Design Value	Units
Minimum chemical feed rate	0.00191	gph
Average chemical feed rate	0.009	gph
Maximum chemical feed rate	0.013	gph
Operating pressure	10	psi
Maximum discharge pressure	100	psi
Maximum power consumption	TBD	hp or VA
Maximum rotor speed	TBD	rpm
Power supply	120/60/1	V/Hz/phase]

Equipment Numbers:	P-1611, P-1612, P-1613, P-1614	
Parameter	Design Value	Units
Minimum chemical feed rate	0.050	Gph
Average chemical feed rate	0.125	Gph
Maximum chemical feed rate	0.206	gph
Operating pressure	30	psi
Maximum discharge pressure	100	psi
Maximum power consumption	TBD	hp or VA
Maximum rotor speed	TBD	rpm
Power supply	120/60/1	V/Hz/phase]

Equipment Numbers:	P-1615, P-1616	
Parameter	Design Value	Units
Minimum chemical feed rate	0.368	gph
Average chemical feed rate	1.21	gph

Equipment Numbers:	P-1615, P-1616	
Parameter	Design Value	Units
Maximum chemical feed rate	5.90	gph
Operating pressure	10	psi
Maximum discharge pressure	110	psi
Maximum power consumption	TBD	hp or VA
Maximum rotor speed	TBD	rpm
Power supply	120/60/1	V/Hz/phase]

Equipment Numbers:	P-1603	
Parameter	Design Value	Units
Minimum chemical feed rate	30	gph
Average chemical feed rate	40	gph
Maximum chemical feed rate	60	gph
Operating pressure	50	psi
Maximum discharge pressure	100	psi
Maximum power consumption	TBD	hp or VA
Maximum rotor speed	TBD	rpm
Power supply	120/60/1	V/Hz/phase]

Equipment Numbers:	P-1560	
Parameter	Design Value	Units
Minimum chemical feed rate	26.25	gph
Average chemical feed rate	35	gph
Maximum chemical feed rate	52.5	gph
Operating pressure	50	psi
Maximum discharge pressure	100	psi
Maximum power consumption	TBD	hp or VA
Maximum rotor speed	TBD	rpm
Power supply	120/60/1	V/Hz/phase]

Equipment Numbers:	P-1545	
Parameter	Design Value	Units
Minimum chemical feed rate	10	gph
Average chemical feed rate	120	gph
Maximum chemical feed rate	230	gph
Operating pressure	15	psi
Maximum discharge pressure	100	psi
Maximum power consumption	TBD	hp or VA
Maximum rotor speed	TBD	rpm
Power supply	120/60/1	V/Hz/phase]

Equipment Numbers:	P-1505, P-1510	
Parameter	Design Value	Units
Minimum chemical feed rate	0.005	gph
Average chemical feed rate	0.05	gph
Maximum chemical feed rate	0.144	gph
Operating pressure	50	psi
Maximum discharge pressure	100	psi
Maximum power consumption	TBD	hp or VA
Maximum rotor speed	TBD	rpm
Power supply	120/60/1	V/Hz/phase]

Equipment Numbers:	P-1525	
Parameter	Design Value	Units
Minimum chemical feed rate	3	gph
Average chemical feed rate	4	gph
Maximum chemical feed rate	6	gph
Operating pressure	50	psi
Maximum discharge pressure	100	psi
Maximum power consumption	TBD	hp or VA
Maximum rotor speed	TBD	rpm
Power supply	120/60/1	V/Hz/phase]

Equipment Numbers:	P-1421, P-1422, P-1423, P-1424	
Parameter	Design Value	Units
Minimum chemical feed rate	0.007	gph
Average chemical feed rate	0.126	gph
Maximum chemical feed rate	0.557	gph
Operating pressure	30	psi
Maximum discharge pressure	100	psi
Maximum power consumption	TBD	hp or VA
Maximum rotor speed	TBD	rpm
Power supply	120/60/1	V/Hz/phase]

Equipment Numbers:	P-1425, P-1426, P-1427, P-1428	
Parameter	Design Value	Units
Minimum chemical feed rate	0.00504	gph
Average chemical feed rate	0.013	gph
Maximum chemical feed rate	0.035	gph
Operating pressure	10	psi
Maximum discharge pressure	150	psi
Maximum power consumption	TBD	hp or VA
Maximum rotor speed	TBD	rpm
Power supply	120/60/1	V/Hz/phase]

Equipment Numbers:	P-1404	
Parameter	Design Value	Units
Minimum chemical feed rate	6.38	gph
Average chemical feed rate	8.5	gph
Maximum chemical feed rate	12.75	gph
Operating pressure	10	psi
Maximum discharge pressure	100	psi
Maximum power consumption	TBD	hp or VA
Maximum rotor speed	TBD	rpm
Power supply	120/60/1	V/Hz/phase]

Equipment Numbers:	P-1405	
Parameter	Design Value	Units
Minimum chemical feed rate	30	gph
Average chemical feed rate	140	gph
Maximum chemical feed rate	250	gph
Operating pressure	15	psi
Maximum discharge pressure	100	psi
Maximum power consumption	TBD	hp or VA
Maximum rotor speed	TBD	rpm
Power supply	120/60/1	V/Hz/phase]

Equipment Numbers:	P-1310, P-1315	
Parameter	Design Value	Units
Minimum chemical feed rate	0.39	gph
Average chemical feed rate	1.13	gph
Maximum chemical feed rate	4.85	gph
Operating pressure	10	psi
Maximum discharge pressure	110	psi
Maximum power consumption	TBD	hp or VA
Maximum rotor speed	TBD	rpm
Power supply	120/60/1	V/Hz/phase]

1.02 QUALITY ASSURANCE

. References:

1. This section contains references to the following documents. They are a part of this section as specified and modified. Where a referenced document contains references to other standards, those documents are included as references under this section as if referenced directly. In the event of conflict between the requirements of this section and those of the listed documents, the requirements of this section shall prevail.
2. Unless otherwise specified, references to documents shall mean the documents in effect at the time of Advertisement for Bids or Invitation to Bid (or on the effective date of the Agreement if there were no Bids). If referenced documents have been discontinued by the issuing organization, references to those documents shall

mean the replacement documents issued or otherwise identified by that organization or, if there are no replacement documents, the last version of the document before it was discontinued. Where document dates are given in the following listing, references to those documents shall mean the specific document version associated with that date, regardless of whether the document has been superseded by a version with a later date, discontinued or replaced.

Reference	Title
ASTM A743/A743M-88	Castings, Iron-Chromium, Iron-Chromium-Nickel, and Nickel-Base Corrosion-Resistant for General Application
NEMA MG 1	Motors and Generators
NEMA ICS 1	Industrial Control and Systems General Requirements

A. Unit Responsibility:
   1. Assign unit responsibility, as specified in Section 43 05 11, to the metering pump manufacturer for the pumps, accessory components, mounting panels and control systems, necessary for proper equipment operation in accordance with the Control Strategy descriptions contained in Division 40 and associated Process and Instrumentation drawings. Provide a completed and signed certificate of unit responsibility (Section 01 99 90-Form 43 05 11-C).

B. Performance Confirmation:
   1. Testing to be conducted as specified in Part 3.03 to verify performance.
   2. Performance guarantee:
      a. Have pump performance (flow and head) guaranteed by the pump manufacturer to the criteria specified under this section.
      b. Ensure that equipment performance documentation, including test data, where tests are specified, includes sufficient test points to document hydraulic performance along the full range of specified flow rates.
      c. Have all test results, including test logs and generated curves, certified correct by the chief engineer or individual in responsible charge of the manufacturer's test facility, and submit in accordance with paragraph 1.04.

1.03 ENVIRONMENTAL CONDITIONS:

. The equipment will be located outdoors in naturally ventilated areas under a canopy. Dense fog, mist and blowing drizzle are common and should be accounted for.

1.04 SUBMITTALS

. Action Submittals:
   1. The following submittals shall be provided as specified in Section 01 33 00:
      a. Shop drawings with complete dimensions and mounting details for the pumps.
      b. Catalog data and information including:
         1) Maximum and minimum capacity using adjustable speed drive, gpm; maximum and minimum operating speed, rpm; and discharge pressure.

2) Motor and adjustable speed drive type.

c. Materials of construction.

d. Net positive suction head required.

e. Manufacturer's wiring diagram.

f. Manufacturer's catalog data on all accessories including pressure regulating valves, pressure relief valves, flow calibration chambers, and suction assemblies.

g. A copy of the contract document control diagrams and process and instrumentation diagrams relating to the submitted equipment, with addendum updates that apply to the equipment in this section, marked to show specific changes necessary for the equipment proposed in the submittal. If no changes are required, the drawing or drawings shall be marked "no changes required".

h. A copy of this specification section, with addendum updates included, and all referenced and applicable sections, with addendum updates included, with each paragraph check-marked to indicate specification compliance or marked to indicate requested deviations from specification requirements. Check marks (□) shall denote full compliance with a paragraph as a whole. If deviations from the specifications are indicated and, therefore requested by the Subcontractor, each deviation shall be underlined and denoted by a number in the margin to the right of the identified paragraph. The remaining portions of the paragraph not underlined will signify compliance on the part of the Subcontractor with the specifications. The submittal shall be accompanied by a detailed, written justification for each deviation.

i. A copy of all related contract schematic, structural, and mechanical drawings with all piping, foundations, supports, and layout sizes and dimensions requiring CONTRACTOR confirmation marked.

A. Information & Closeout Submittals

1. Procedures: Sections 01 33 00, 01 77 00 and 01 78 23.

a. Performance guarantee as specified in Paragraph 1.02C.

b. Operation and maintenance data, as specified in Section 01 78 23, on the pumps, adjustable speed drives and accessories.

c. Manufacturer's certification (Form 43 05 11-A per Section 01 99 90) that the equipment has been properly installed, aligned and tested and meets all requirements for satisfactory performance under the conditions specified.

d. Manufacturer's instruction certification (Form 43 05 11-B per Section 01 99 90) that instructions to operators have been completed.

e. Motor data as specified in Section 43 05 21.

f. Pump Test Log as specified in paragraph 3.03.

PART 2 PRODUCTS

2.01 MANUFACTURERS

. The Engineer believes the following candidate manufacturer is capable of producing equipment and/or products that will satisfy the requirements of this Section. This statement, however, shall not be construed as an endorsement of a particular manufacturer's product, nor shall it be construed that a named manufacturer's standard product will comply with the requirements of this Section. Candidate manufacturers include Blue-White Industries, Watson Marlow, Verderflex or approved equal.

2.02 GENERAL

. The manufacturer shall furnish all meter pump system equipment to complete a properly functioning, integrated package as intended by these specifications. The system shall be factory-assembled to the maximum extent practical. Factory assembly shall include all pumps, motors, bases, drives, and appurtenant valves and fittings. Any component parts not pre-assembled due to packaging and shipping concerns shall be identified and clearly labeled. No field welding will be allowed.

A. All materials used for the metering pumps and accessories shall be designed by the manufacturer to have the necessary strength, stability and stiffness for the intended service. All connections, foundation bolts, plates, nuts, washers and clamps shall be corrosion resistant to the conditions of use.

2.03 MATERIALS

. The peristaltic metering pumps shall be manufactured of the following materials:

Equipment Numbers:	P-1340, P-1345, P-1350, P-1355, P-1365, P-1611, P-1612, P-1613, P-1614, P-1615, P-1616, P-1603, P-1560, P-1545, P-1505, P-1510, P-1525, P-1421, P-1422, P-1423, P-1424, P-1425, P-1426, P-1427, P-1428, P-1404, P-1405, P-1310, P-1315
Case	Die-cast aluminum
Pumphead Track	Polyphenylene sulfide or Polybutylene Terephthalate
Rollers	316 stainless steel or Nylon
Roller Bearings	316 stainless steel with PTFE seals
Drive shaft	Nickel plated steel

A. Materials specified are considered the minimum acceptable for the purposes of durability, strength, and resistance to erosion and corrosion. The Subcontractor may propose alternative materials for the purpose of providing greater strength or to meet required stress limitations. However, alternative materials must provide at least the same qualities as those specified for the purpose

2.04 EQUIPMENT

. Pump and Drive Mechanism:

1. Pump shall be of the positive displacement peristaltic type utilizing a flexible tube. The tubing shall be in contact with the inside diameter of the track (housing) and be held in place on the suction and discharge by a hand adjustable clamp mechanism. Tube clamps requiring tools are not acceptable. Suction and discharge shall be on the same side of the pump head. The tubing shall be replaceable with no disassembly of the pump head and without the use of tools. Each pump shall consist of track/pump head cover with safety lock-out switch, screw down retainer mechanism, roller rotor assembly with integral adjustable speed drive. The lock-out switch shall render the drive inoperable when opened. The pump head shall be easily secured to the drive and be self-Locking.
2. Each pump shall be capable of self-priming when completely dry with a suction lift capability of up to 30 feet of water. The pump shall be capable of running dry without damaging effects to the pump or tubing. The pump shall require no check valves or diaphragms and shall not require any dynamic seals in contact with the process fluid. The process fluid shall only be in contact with the inside of the pump tubing.
3. Pumps shall be configured to conform with space constraints as shown in the Drawings.

A. Tubing:

1. The manufacturer shall furnish the appropriate hose material for the conditions of use (e.g., extruded Marprene, Neoprene, Silicone, PVC, or Viton). The tubing shall be of 64 shore A durometer.
2. Pump tubing diameter may vary for different drive sizes. For drive speeds ranging from 10 to 360 rpm, the pump must accept tubing with a wall thickness of 3/16 inch and an inside diameter ranging from of 3/4 inch to 1 inch. For drive speeds ranging from 5 to 265 rpm, the pump must accept a wall thickness of 1/8 inch and a variation in inside diameter ranging from 1/2 inch to 5/8 inch. For drive speeds ranging from 10 to 220 rpm, the pump must accept tubing with an inside diameter of 1/8 inch.

B. Rotor Assembly and Track: The rotor assembly shall be equipped with two or four self-lubricating geared compression rollers mounted on spring loaded arms. Rotor material of construction shall be as specified in paragraph 2.03 Materials. Compression rollers shall be symmetrical about the rotor for compression of the hose against the track. The track material shall be as specified in paragraph 2.03 Materials, and if cast aluminum; shall be factory coated with trimite polyurethane. One roller shall at all times be fully engaged with the tubing providing complete compression to prevent back flow or siphoning. The pumping action shall be created by the occlusion of the pump hose and its subsequent restitution causing a vacuum effect to draw the fluid into the suction side of the hose. Hose occlusion shall be adjustable with a lead screw, which limits the travel of the spring, loaded roller.

C. Piping Connection: Adapters and connective fittings between the flexible tubing and the fixed piping shown on the Contract Drawings shall be provided by the manufacturer for each size tubing that is compatible with each pump.

D. Valves

1. Adjustable pressure relief type valves shall be installed on pump discharge as shown the drawings. Pressure shall be set according to the table below. The valves shall be sized to handle a maximum flow through the valves of not less than 1.5 times the maximum flow supplied by the associated pump. The valve shall be suitable for the chemical solution service specified. The valve body shall be CPVC, and the diaphragm shall be PTFE faced EPDM.

Valve number	Service	Valve size, inches	Pressure Relief, psig
PSV1340, ETC.	AMM	½	30
PSV1603, ETC.	CS	½	30
PSV1545, ETC.	CTA	½	30
PSV1505, ETC.	SBS	½	30
PSV1404, ETC.	SHC	½	30
PSV1310, ETC.	ACOH	½	30

2.05 DRIVE UNITS AND CONTROLS

. Adjustable Speed Drive: Pumps shall be provided with an integrally mounted adjustable speed drive. The speed setting of the drive shall be continuously adjustable over a minimum 200:1 operating range. The adjustable speed drive shall be for use with brush motors and be located in a NEMA 4X cabinet. Drive shall be supplied with one 120 VAC input. Drive motor shall be servo permanent magnet DC with integral gear box.

A. Motors:

1. Drive shall be rated for continuous 24-hour operation. Pumps shall have non-maintained maximum speed switches for purpose of priming. Pump drives shall be close coupled and self-aligning, requiring no flexible couplings. Each pump shall be capable of operating with a range of hose/tubing diameters and thicknesses which may vary depending on the drive size of the pump.
2. The drive enclosure shall be NEMA 4X rated and be factory coated with a corrosion resistant non-reactive (e.g. polyester and/or polyurethane) coating. Drive motors shall be integrally mounted in drive enclosure.

B. Control Panel:

1. Local controls shall consist of a flow rate output controller, a START pushbutton, a STOP pushbutton, RESET and a LOCAL/REMOTE switch. Control shall be such that when the drive is running in the LOCAL mode, speed shall be adjusted at local HMI keypad. In the REMOTE mode, the drive shall operate in response to a

external run command and 4-20 mA external speed reference (dosage setpoint) signal as shown on drawings.

2. NEMA 4X rated controls shall be provided on the pumps. The controls shall provide as a minimum the following features:
   a. Accept a 4-20 mA speed reference (dosage setpoint) input signal
   b. Accept dry REMOTE-RUN contact
   c. Provide a 4-20 mA drive flowrate output signal
   d. Provide dry contacts rated for 1 amp at 120 V AC for the following status:
      1) Running
      2) In REMOTE mode
      3) In LOCAL mode
      4) Pump Fail

2.06 EQUIPMENT MOUNTING

. Pumps shall be suitable for installation on pump skids to be provided by the supplier.

2.07 ACCESSORIES

. Flow Calibration Columns:

1. Pumps shall be provided with flow calibration columns on the pump suction lines. Calibration columns shall be manufactured of clear PVC and shall be labeled in standard divisions and milliliters. Calibration columns shall have a volume sized appropriately for each chemical pump ranging from 100 mL for smaller flows to 10 L for larger transfer pumps and shall have 1/2-inch female NPT connections at the top and bottom. Calibration chambers shall be provided by the same manufacturer as is furnishing the pumps.
2. The Subcontractor shall install vent piping to a level above the maximum storage tank level to prevent overflow. Include a turndown on the vent pipe to prevent the ingress of dirt and debris. Vent pipe materials shall match the materials of low pressure piping for the system. Include support of the vent pipe as needed to prevent sway.

A. Leak Detection: Pumps shall be provided with leak detection located on the tube which shall interconnect to the pump control panel. The control panel shall provide a dry contact alarm for remote indication of leak detection.

B. Pressure Gauge and switch: Provide one pressure gauge/switch assembly with diaphragm seals on the discharge of each pump. The pressure gauges and switches shall be supplied in accordance with Section - 40 91 08 Pressure Measuring Devices and Section 40 91 09 - Pressure Detection Switches.

2.08 COATINGS

. Except as otherwise specified in this Section, equipment shall be shop primed in accordance with the requirements of Section 09 90 00.

2.09 SPARE PARTS

. The following spare parts components shall be provided:

1. Ten lengths of tubing in each size (diameter) as necessary to satisfy the requirements of paragraph 1.01 Design Requirements.
2. One pump head for each size pump.

A. Spare parts shall be tagged and stored as specified in Section 43 05 11.

PART 3 EXECUTION

3.01 GENERAL

. Pumps shall be aligned, connected, and installed in strict accordance with the manufacturer's instructions.

3.02 INSTALLATION

. The equipment shall be installed under the direction of factory trained personnel as specified in Section 43 05 11. The installation shall be certified on Form 43 05 11-A specified in Section 01 99 90.

3.03 TESTING

. After installation, the equipment specified in this section shall be completely tested to ensure compliance with operating requirements, varying pumps speeds with speeds and flows recorded in a test log. Field testing shall be in accordance with the testing procedures in Section 01 91 13 and 01 91 14. Testing shall verify the control strategies specified in Division 40.

A. Following successful testing and commissioning of associated control loops, and prior to pumping chemical solution, the pump and chemical piping shall be emptied and dried. See Section 40 05 01 for additional requirements.

END OF SECTION

SECTION 46 41 17
INLINE STATIC MIXERS AND INJECTORS

PART 1 GENERAL

1.01 SUMMARY

A. This section specifies the general requirements for design, selection, and supply of inline static mixers and chemical injectors. Installation, inspection, and testing are also specified in this Section.

B. Equipment List

Item	Equipment Number	Supplied by
NaOCl MBR MC and CIP Injector	IQ-511	Contractor
CAC MBR MC and CIP Injector	IQ-512	Contractor
PFC MBR Filtrate Injector	IQ-513	Contractor
PFC MBR Filtrate Mixer	MXR-513	Contractor
SBS Ozone Feed Injector	IQ-701	Contractor
SBS Ozone Feed Mixer	MXR-703	Contractor
Ozone Venturi Injector	ME-715	Ozone System Supplier[1]
Ozone Direct Injection Mixer	MXR-716	Ozone System Supplier[1]
SBS Ozone Product Injector	IQ-741	Contractor
PFC MF Feed Injector	IQ-860	Contractor
PFC MF Feed Mixer	MXR-860	Contractor
NaOH MF CIP Injector	IQ-891	MF System Supplier
CAC MF CIP Injector	IQ-892	MF System Supplier
NaOCl MF CIP Injector	IQ-893	MF System Supplier
SBS MF CIP Injector	IQ-894	MF System Supplier
PFC San Vicente RO Feed Injector	IQ-1051	Contractor
PFC San Vicente RO Feed Mixer	MXR-1000	Contractor
CAC RO CIP Injector	IQ-1061	Contractor
NaOH RO CIP Injector	IQ-1062	Contractor
AS San Vicente RO Injector	IQ-1052	Conventional RO System Supplier[2]
SAC San Vicente RO Injector	IQ-1053	Conventional RO System Supplier[2]
AS Murray Conventional RO Injector	IQ-1021	Conventional RO System Supplier[2]
SAC Murray Conventional RO Injector	IQ-1022	Conventional RO System Supplier[2]

Item	Equipment Number	Supplied by
AS Murray CCRO Injector	IQ-1031	CCRO System Supplier[3]
SAC Murray CCRO Injector	IQ-1032	CCRO System Supplier[3]
AS Murray FRRO Injector	IQ-1041	FRRO System Supplier[4]
SAC Murray FRRO Injector	IQ-1042	FRRO System Supplier[4]
LAS San Vicente UV/AOP Injector	IQ-1101	Contractor
LAS San Vicente UV/AOP Mixer	MXR-1103	Contractor
NaOCl San Vicente UV/AOP Injector	IQR-1102	Contractor
NaOCl San Vicente UV/AOP Mixer	MXR-1104	Contractor
Test Chemical San Vicente UV/AOP Injector	IQ-1103	Contractor
LAS Murray UV/AOP Injector	IQ-1121	Contractor
LAS Murray UV/AOP Mixer	MXR-1123	Contractor
NaOCl Murray UV/AOP Injector	IQ-1122	Contractor
NaOCl Murray UV/AOP Mixer	MXR-1124	Contractor
Test Chemical Murray UV/AOP Injector	IQ-1123	Contractor
NaOH and NaOCl Carrier Water Pump No. 1 Mixer	MXR-1212	Contractor
LAS Carrier Water Pump No. 1 Mixer	MXR-1213	Contractor
NaOH and NaOCl Carrier Water Pump No. 2 Mixer	MXR-1222	Contractor
LAS Carrier Water Pump No. 2 Mixer	MXR-1223	Contractor
NaOH and NaOCl Carrier Water Pump No. 3 Mixer	MXR-1232	Contractor
LAS Carrier Water Pump No. 3 Mixer	MXR-1233	Contractor

[1] Ozone/BAC System Supplier Scope, see Section 46 31 52
[2] Conventional 3-Stage RO System Supplier Scope, see Section 46 63 21.01
[3] CCRO System Supplier Scope, see Section 46 63 21.02
[4] FRRO System Supplier Scope, see Section 46 63 21.03

C. Chemical Service:
   1. The equipment shall be designed and selected for handling the following chemical solution[s]:

Chemical	Abbreviation	Concentration (wt/wt)
Sodium Hydroxide	NaOH	25.0%
Sodium Hypochlorite	NaOCl	12.5%
Ammonium Sulfate	LAS	38.0-40.0%
Sulfuric Acid	SAC	93%
Antiscalant	AS	100%
Citric Acid	CAC	50%
Sodium Bisulfite	SBS	38%
Preformed Chloramines	PFC	0.05-0.1%
1,4-dioxane, NDMA	TEST	TBD During Testing

1.02 RELATED SECTIONS

A. This section contains specific references to the following related sections. Additional related sections may apply that are not specifically listed below.
   1. Section 01 33 00 – Submittal Procedures
   2. Section 01 45 33 – Special Inspection, Observation, and Testing
   3. Section 01 61 00 – Common Product Requirements
   4. Section 01 78 23 – Operation and Maintenance Data
   5. Section 01 91 14 – Testing and Startup
   6. Section 40 05 01 – Piping Systems
   7. Section 40 05 31 - Thermoplastic Process Pipe
   8. Section 40 05 45 – Piping System Identification

1.03 REFERENCES

A. This section contains references to the following documents. They are a part of this section as specified and modified. Where a referenced document contains references to other standards, those documents are included as references under this section as if referenced directly. In the event of conflict between the requirements of this section and those of the listed documents, the requirements of this section prevail.

Reference	Title
ASME B16.21	Nonmetallic Flat Gaskets for Pipe Flanges
ASME B31.3	Process Piping
NSF 61	Drinking Water Components – Health Effects

1.04 SUBMITTALS

A. A copy of this specification section, with addendum updates included, and all referenced and applicable sections, with addendum updates included, with each paragraph check-marked to indicate specification compliance or marked to indicate requested deviations from specification requirements. Check marks (□) shall denote full compliance with a paragraph as a whole. If deviations from the specifications are

indicated and therefore requested by the Contractor, each deviation shall be underlined and denoted by a number in the margin to the right of the identified paragraph, referenced to a detailed written explanation of the reasons for requesting the deviation. The City shall be the final authority for determining acceptability of requested deviations. The remaining portions of the paragraph not underlined will signify compliance on the part of the Contractor with the specifications. Failure to include a copy of the marked-up specification sections, along with justification(s) for any requested deviations to the specification requirements, with the submittal shall be sufficient cause for rejection of the entire submittal with no further consideration.

B. Submit a shop drawing showing the material of construction, sizing, dimensions, and connection types for the inline static mixers.

C. Submit computational fluid dynamics (CFD) analysis calculation showing the sizing and performance details (mixing efficiency) specific to the static mixer design criteria stated within this section.

D. Submit headloss curves showing the performance details for each statix mixer at design flow rates.

E. Submit installation, operation, and maintenance manuals per Section 01 78 23.

F. Submit verification of ANSI/NSF61 approved materials necessary for construction of required static mixers specified herein.

1.05 QUALITY ASSURANCE

A. Review the drawings prior to installation of equipment. Coordinate the length of the mixers with available space for installation.

B. See Section 01 45 33 for additional inspection requirements.

1.06 DELIVERY, STORAGE, AND HANDLING

A. Procedures: Section 01 61 00 for shipment and storage.

PART 2 PRODUCTS

2.01 MIXERS

A. Type:
   1. The inline mixers shall be of static or motionless type that consist of a series of fixed elements placed at the right angles to each other and enclosed in a tubular housing designed for pipeline installation. The mixers shall have no moving parts.

B. Manufacturers:
   1. Manufacturers: Candidate manufacturers are listed below. The manufacturer's standard product may require modification to conform to specified requirements:
      a. Komax
      b. Statiflo

c. Westfall
d. Or approved equal

C. Performance and Design Requirements:
1. The spool mixers shall thoroughly mix the chemicals injected onto the mixer to achieve a minimum mixing efficiency (coefficient of performance - COP) of 95% within 6 pipe diameters downstream of the mixer at flow rates shown in the table below without exceeding the allowable headloss. The water and chemical flow rates and chemical details are provided in the table below:

Equipment Number	Mixer Size, inch Diameter	Process Flowrate, gpm	Chemical Details			Maximum Allowable Headloss, ft	Mixer Type	Mixer Material
			Chemical	Maximum Flowrate, gph	Minimum Flowrate, gph			
MXR-513	6	201	PFC	60	60	7	Spool	PVC
MXR-703	4	148	SBS	0.05	0	7	Spool	PVC
MXR-860	4	148	PFC	60	60	7	Spool	PVC
MXR-1000	1 1/2	20	PFC	60	60	5	Spool	PVC
MXR-1103	1 1/2	10	LAS	0.01	0.001	5	Spool	PVC
MXR-1104	1 1/2	10	NaOCl	0.05	0.007	5	Spool	PVC
MXR-1123	1 1/2	10	LAS	0.01	0.001	5	Spool	PVC
MXR-1124	1 1/2	10	NaOCl	0.05	0.007	5	Spool	PVC
MXR-1212	3/8	1	NaOH, NaOCl	0.21, 1.17	0.05, 0.142	7	Spool	CPVC
MXR-1213	3/8	1	LAS	0.25	0.03	7	Spool	CPVC
MXR-1222	3/8	1	NaOH, NaOCl	0.21, 0.37	0.05, 0.09	7	Spool	CPVC
MXR-1223	3/8	1	LAS	0.19	0.08	7	Spool	CPVC
MXR-1232	3/8	1	NaOH, NaOCl	0.21, 0.06	0.05, 0.014	7	Spool	CPVC
MXR-1233	3/8	1	LAS	0.01	0.003	7	Spool	CPVC

**No process tap required; chemical injection is provided upstream*

2. Spool Mixers:
a. The mixers shall be provided with Class 150 flanges or threaded ends (for up to 2”).
b. Mixer housing and elements shall be made of materials shown on the table above.
c. The mixers shall not have any pre-requisite on upstream and downstream lengths for meeting the performance requirements.
d. Where shown on the drawings, mixers to be provided with process taps and injection quills per Part 2.02
e. The mixers will be installed in outdoor location and shall be suitable for the installed location.

3. The static mixer and gasket materials of construction shall be as listed in table above. Coatings to ensure chemical compatibility of the mixer housing and mixing elements with the injected chemical shall not be accepted.

2.02 INJECTION ASSEMBLIES:

A. Provide injection assemblies where shown on the Drawings and specified herein.

B. Requirements:
1. Injection quills shall be threaded into the side of the process pipe or mixer at the locations specified with 1/2-in or 3/4-in NPT fitting.
2. Components shall include a spring-loaded ball check valve, retractable solution tube (injector), solution tube body, compression gland, ball valve, dual limit chains and dual bolt restraints.
3. Tip profile of the injection tube shall be standard/flat except for sodium hydroxide quills which shall include elastomeric duckbill tips.
4. Coordinate injector tube insertion length with the static mixer manufacturer where applicable to insure against interferences with the mixer port and/or mixing plate and to insure the chemical is injected in the centerline of the process pipe.
5. Injection quills shall be installed at each location identified in the table below and shall be constructed with materials compatible with each chemical. Injection quills shall be able to withstand maximum pump discharge line pressure and water main pressure as specified in applicable pipe schedules under Section 40.
6. Injection assemblies shall be as manufactured by Saf-T-Flo or approved equal.

Equipment Number	Process Pipe Diameter, inches	Chemical Inlet Size, inches	Process Flow Rate, gpm	Chemical Details			Wetted Materials
				Chemical	Max Flowrate, gph	Min Flowrate, gph	
IQ-511	6	1/8	201	NaOCl	0.36	0.26	CPVC
IQ-512	6	1/8	201	CAC	0.36	0.26	CPVC
IQ-513	6	3/8	201	PFC	60	60	CPVC
IQ-701	4	1/8	148	SBS	0.05	0	CPVC
IQ-741	4	1/8	148	SBS	0.10	0	CPVC
IQ-860	4	3/8	148	PFC	60	60	CPVC
IQ-1051	1.5	3/8	20	PFC	60	60	CPVC
IQ-1061	3	1	100	CAC	52	26	CPVC
IQ-1062	3	1	100	NaOH	60	30	CPVC
IQ-1101	1 1/2	1/8	10	LAS	0.01	0.001	CPVC
IQ-1102	1 1/2	1/8	10	NaOCl	0.05	0.007	CPVC
IQ-1103	1 1/2	TBD	10	TEST	TBD	TBD	CPVC
IQ-1121	1 1/2	1/8	10	LAS	0.01	0.001	CPVC
IQ-1122	1 1/2	1/8	10	NaOCl	0.05	0.007	CPVC
IQ-1123	1 1/2	TBD	10	TEST	TBD	TBD	CPVC

PART 3 EXECUTION

3.01 GENERAL

The equipment shall be installed in strict accordance with the applicable sections of Division 1 and the respective manufacturer's instructions and recommendations.

3.02 TESTING

A. After installation, the equipment specified in this section shall be completely tested as part of the system-wide testing described in Section 01 91 14 to ensure compliance with operating requirements and flows recorded in a test log.

END OF SECTION

THIS PAGE INTENTIONALLY LEFT BLANK

SECTION 46 41 40

BIOLOGICAL NUTRIENT REMOVAL SYSTEM

PART 1 GENERAL

1.01 GENERAL DESCRIPTION OF GOODS AND SPECIAL SERVICES

A. This section, together with section 46 61 33 and other sections of the Contract Documents, specifies the requirements for the Goods and Special Services to be provided by a single wastewater system supplier (WWSS). The WWSS shall be the vendor responsible for supplying the Biological Nutrient Removal (BNR) system and coordinating the Membrane Bioreactor (MBR) system, including design, manufacturing, factory testing and delivery of materials and equipment. The WWSS shall have completed the installation of a minimum of two similarly sized BNR systems. The MBR system portion of the design shall meet the minimum requirements defined in 46 61 33. The WWSS is responsible to furnish and install a complete and operable system.

B. The design of the BNR System as contained herein is specifically and uniquely tailored for the following equipment and systems:
   1. Dupont
   2. Suez Water Technologies & Solutions

C. The BNR System includes the following equipment. Refer to drawings I-34 and I-41 through I-44 for all vendor furnished appurtenances
   1. BNR Tank welded steel tank & waste activated sludge (WAS) Box system
   2. Top-Entering Tank Mixers
      a. MXR-400: Deoxygenation (DeOx) Mixer 1
      b. MXR-401: Anoxic Zone 1 Mixer
      c. MXR-402: Anoxic Zone 2 Mixer
   3. BNR Tank Aeration Blower System (BLW-450 and BLW-460) and Appurtenances
   4. Internal Mixed Liquor Return (IMLR) Pump System (P-440)
   5. Mixed Liquor (ML) Pump System (P-430)
   6. Weir Gates (ME-400, ME-401, ME-402, ME-403, FCV-420)
   7. Ammonia-based Aeration Control (ABAC) System
   8. Analyzers
      a. Ammonia, AE/AIT-410 and AE/AIT-662.
      b. Total Suspended Solids, AE/AIT-405
      c. Nitrate, AE/AIT-403 and AE/AIT-407
      d. Dissolved Oxygen, AE/AIT-404 and AE/AIT-406
      e. pH and Temperature, AE/AIT-408

D. This section, together with the sections listed below and other sections of the Contract Documents, also specifies the Special Services to be provided by the WWSS for a new BNR System, including but not limited to the following:

1. Supporting the Contractor during planning and design by providing equipment and drawing submittals, technical and engineering services, design reviews, bills of materials, in-person participation in design workshops, responses to questions posed by the Contractor and other specified Special Services.
2. Supporting the Contractor during construction, including providing operation and maintenance (O&M) manuals, inspection and support during installation of the materials and equipment, field startup assistance, operator training and field commissioning and acceptance testing and other specified Special Services.
3. Supporting the Contractor during the initial operating period.

1.02 UNIT RESPONSIBILITY

A. The WWSS shall be responsible for supplying all materials, equipment and appurtenances for the BNR System and cause all materials, equipment and appurtenances to be provided as a working unit. The WWSS shall coordinate selection and design, and shall provide all materials, equipment and appurtenances such that all components furnished are compatible and operate reliably and properly to achieve the specified performance requirements. Agents, representatives or other entities that are not a direct division of the WWSS's corporation shall not be accepted as a substitute in meeting this requirement. The requirement for unit responsibility shall in no way relieve the WWSS of its responsibility to the Contractor for performance of all systems as specified.

B. The WWSS is the unit responsibility manufacturer and has unit responsibility for both the equipment assemblies specified in this section, referenced in this section, and for integration of instrumentation and controls associated with the equipment.

1.03 BNR SYSTEM DESCRIPTION

A. The BNR System will be part of the new Central Area Small Scale Facility (CASSF) within the existing Point Loma Wastewater Treatment Plant (PLWTP). The BNR System shall be configured for flexibility to accommodate two different total nitrogen (TN) removal targets of <20 mg/L and <10 mg/L of TN in the MBR effluent pending the mode of operation for data collection.

B. The bioreactor is configured as a Modified Ludzack-Ettinger (MLE), with an anoxic zone for nitrogen removal using the carbon in the Blended Primary Effluent (BPE), followed by aerobic zones. Mixed liquor is pumped to the membrane tanks from where the RAS is pumped back to the DeOx zone to reduce the Dissolved Oxygen (DO) before returning to the anoxic zones. A small portion (10%) of the RAS will bypass the DeOx zone to the strainers. An IMLR pump returns mixed liquor from the end of the aeration zone 1 to the DeOx zone. The IMLR pump is included to allow for control of the MBR total suspended solids (TSS) for testing purposes. The hydraulic retention time (HRT) will be varied by varying the side water depth (SWD) in the BNR tank, there by varying the volume in the BNR tank.

C. The BNR tank is designed with a maximum SWD of 20 ft deep to match the existing aeration basins at North City Water Reclamation Plant (NCWRP). The minimum SWD will be 18 ft and controlled by manual weir gates.

D. Alkalinity (caustic soda) will be added to maintain pH, and carbon addition (acetic acid) can be added to remove additional inorganic nitrogen. The bioreactor will have instrumentation and a system to allow for ABAC to optimize performance with simultaneous nitrification-denitrification (SND).

E. BNR tank and WAS box, as specified herein and in accordance with Section 43 40 04 Welded Steel Tank:
   1. BNR tank will include a WAS Box, DeOx zone, two anoxic zones, two aerobic zones, corner baffle, stairway, walkways, guardrails, and structural support for equipment and adjacent piping.

F. Top-Entering Tank Mixers, as specified in Section 46 41 41 Top Entering Tank Mixers:
   1. The DeOx and Anoxic mixers shall be a complete assembly with electric motor, gear reducer, mechanical seal, shafts, impeller, and all specified appurtenances, supported by the BNR tank.

G. BNR tank Aeration Blower System and Appurtenances
   1. Aeration system shall be complete with a fine bubble diffusion system including piping manifolds, positive displacement blower(s) and air control valves as specified in Section 46 51 36 and Section 43 11 33.

H. Intermediate Mixed Liquor Return (IMLR) Pump as specified in Section 43 23 89.13 Horizontal Variable Speed, End Section Centrifugal Pumps
   1. Horizontal end suction pumps shall circulate mixed liquor from the aerobic zone 2 to the DeOx zone.

I. Mix Liquor (ML) Pump as specified in Section 43 24 41 Positive Displacement Rotary Lobe Pumps
   1. Rotary lobe pump shall pump mixed liquor from the aerobic zone 2 to the MBR membrane tank to control flow to the membrane tank.

J. Downward Opening Weir gates as specified in Section 40 05 59.23
   1. Weir gates between zones will be used to control the HRT and varying the SWD between 18-20 ft. The v-notch weir gate for the WAS box will be used to control surface wasting to drain.

K. Ancillary Equipment and Appurtenances
   1. The WWSS shall furnish the Biological Nutrient Removal System complete with all ancillary equipment and appurtenances as specified and shown in drawings.

1.04 DESIGN CRITERIA

A. The BNR System shall be designed based on the design criteria table drawing, G-11 and referenced specifications within this Section.

1.05 DEFINITIONS – NOT USED

1.06 SCOPE OF SPECIAL SERVICES

A. The design and construction of the BNR System requires considerable coordination between the Contractor and WWSS. The WWSS shall provide assistance to the Contractor and provide the information needed to design the BNR System and the ancillary equipment designed by the Contractor but not provided by the WWSS. The WWSS shall also support the Contractor during installation, testing and commissioning as specified.

B. The Special Services supplied by the WWSS as outlined in the Contract Documents shall include, but are not limited to the following:
   1. Special Services during planning and design:
      a. Design of Goods provided by WWSS as a single integrated and functional BNR System, including but not limited to the following:
         1) General arrangement drawings
         2) Process and instrumentation diagrams (P&IDs)
         3) Design of BNR Tank will include a WAS Box, DeOx tank, anoxic zones, and aerobic zones in coordination with WWSS supplied requirements
         4) Top-Entering Tank Mixers (DeOx and Anoxic mixers) shall be a complete assembly with electric motor, gear reducer, mechanical seal, shafts, impeller, and all specified appurtenances, mounted on a common pedestal base in coordination with WWSS supplied requirements
         5) Intermediate Mixed Liquor Return (IMLR) Pump System in coordination with WWSS supplied requirements
         6) Mixed Liquor (ML) Pump system in coordination with WWSS supplied requirements
         7) Design of the Aeration Basin System shall be complete with a Fine Bubble Diffusion System including piping manifolds, positive displacement blowers and air control valves in coordination with WWSS supplied requirements
         8) Control system drawings, including system architecture drawings, interconnection diagrams, and panel layouts
         9) Development of programmable logic controller (PLC) programs and human-machine interfaces for the operation and monitoring of the Biological Nutrient Removal System, including:
            a) Design and programming of operator interface screens, data logging and reporting system
            b) Coordination between WWSS's PLC and other plant PLC equipment interfaces
            c) Programming of PLCs supplied with system
            d) Factory acceptance testing of Biological Nutrient Removal Control System
            e) Cooperation and coordination with the Contractor on development of the Plant Control System
      b. Delivery of initial, intermediate and final submittals

c. Responses to questions posed by the Contractor

2. Special Services during construction:
   a. Delivery and installation services specified
   b. Delivery of operation and maintenance manuals, including installation and startup procedures for all BNR system equipment and appurtenances
   c. Facility inspection and certification
   d. In-person attendance at up to 5 coordination meetings
   e. Fulltime on-site supervision of the BNR system installation
3. Special Services during startup, testing, commissioning and acceptance testing specified in this section including the following:
   a. Factory acceptance testing services
   b. Equipment and system performance and operational testing as specified herein and other sections.
   c. Commissioning services as specified in this section.
   d. Training of operations and maintenance personnel as specified in this Section.
   e. Operational assistance services
4. Special Services during first two years of operation following completion of commissioning.

1.07 SCOPE OF SUPPLY OF THE GOODS

A. Supply of the Goods to be provided by the WWSS shall include all items specified in this section, including the following:
   1. Biological Nutrient Removal System equipment and appurtenances including but not limited to: Biological Nutrient Removal Basins (WAS Box, DeOx tank, anoxic zones, and aerobic zones), IMLR Pump System, Top-Entering Tank Mixers, Mixed Liquor (ML) Pump system. The WWSS shall provide the equipment, valves, instruments, controls and other components (excluding interconnecting piping, conduit and cabling outside the boundary of the WWSS's scope of work, unless specified otherwise).
   2. Dedicated Aeration Basin System shall be complete with a Fine Bubble Diffusion System including piping manifolds, positive displacement blowers, flow conditioner, and air control valves.
   3. Dedicated pH/oxidation reduction potential (ORP), nitrate (NO3), DO, TSS, ammonium (NH4+) monitoring systems at the BNR basins.
   4. Appurtenances and equipment for chemical dosing systems at the BNR tank (not including chemical storage tanks, metering systems or piping)
   5. Valves and actuators for all systems provided by the WWSS
   6. Control panels, including programmable logic controllers for the BNR Control System
   7. Operator interface terminal (with human-machine interface or HMI) on the Biological Nutrient Removal System main control panel
   8. Miscellaneous field mounted instrumentation including:
      a. Level and pressure switches

b. Pressure gauges and snubbers
c. Flowmeters
d. Level, temperature and pressure indicating transmitters
e. Analyzers
   1) Ammonia
   2) Total Suspended Solids
   3) Nitrate
   4) Dissolved Oxygen
   5) pH and Temperature

1.08 CONTRACTOR RESPONSIBILITIES (DURING CONSTRUCTION)

A. The Contractor is responsible for the following:
   1. Unpack, assemble, and install equipment items furnished by the WWSS as shown on drawings prepared by the Contractor per WWSSs design and as specified herein in accordance with the WWSS's requirements.
   2. Furnish and install additional equipment items, interconnecting piping, and power and control conduit and wiring as required.
   3. Installation of yard and interconnecting process piping.
   4. Supply and installation of items not in the scope of the WWSS.
   5. Construction of buildings and facilities to house the Biological Nutrient Removal System.
   6. Installation of electrical systems and operator interfaces.
   7. Coordination and implementation of performance and operational testing and commissioning activities in conjunction with the WWSS. The Contractor will prepare a schedule that will incorporate the WWSS's "Detailed Plan of Commissioning Activities". The Contractor will be responsible for commissioning equipment not provided by the WWSS.
   8. Corrective assistance during demonstration, field, and acceptance testing of the Biological Nutrient Removal System.
   9. Provide and install motor control centers and motor starters for WWSS provided equipment unless otherwise specified.

1.09 SPECIAL CONSIDERATIONS

A. Design or Performance Requirements: It is the intent of the specifications to identify major components of the Biological Nutrient Removal System and to establish minimum equipment and quality standards for the components. It is the WWSS's responsibility to provide all parts, equipment, materials, and components required for a complete and functional Biological Nutrient Removal System.

B. The WWSS shall number all equipment, instruments and valves with permanent, durable tags. The equipment numbering shall be coordinated directly with the Contractor's numbering scheme for this facility. After Notice of Award, an equipment numbering scheme will be provided for the WWSS to follow.

C. BNR System Scope:
   1. The WWSS shall furnish all components identified and as specified herein and in other sections of this package.
   2. The WWSS is responsible for design and supply of the Biological Nutrient Removal Control System for the Biological Nutrient Removal System and for interfacing with the Plant Control System and other systems within the facility.

1.10 QUALITY ASSURANCE / QUALITY CONTROL

A. Reference Standards: Comply with applicable provisions and recommendations of the following, except as otherwise shown or specified:
   1. American Society of Mechanical Contractor's (ASME)
   2. ASME Boiler and Pressure Vessel Code
   3. ASME B16.5 – Pipe Flanges and Flanged Fittings
   4. ASTM International (ASTM)
   5. ASTM A 36, Standard Specification for Structural Steel
   6. ASTM A 193 – Standard Specification for Alloy-Steel and Stainless Steel Bolting Materials for High-Temperature Service
   7. American National Standards Institute (ANSI)
   8. American Welding Society (AWS)
   9. AWS A5.9 - Specification for Bare Stainless Steel Welding Electrodes and Rods
   10. AWS D1.1 – Structural Welding Code – Steel
   11. AWS D10.9 – Standard for Qualification of Welding Procedures and Welders for Piping and Tubing
   12. Hydraulic Institute (HI)
   13. Institute of Electrical and Electronic Engineers (IEEE)
   14. National Electric Code (NEC)
   15. National Electrical Manufacturers Association (NEMA)
   16. Standards of National Electrical Manufacturers Association
   17. Standards of American Water Works Association (AWWA)
   18. Underwriter's Laboratory (UL)
   19. NSF International (NSF)
   20. WWSS's Quality Assurance/Quality Control Program

B. The WWSS shall have in place a dedicated quality control/quality assurance program that conforms to ISO-9000 / ISO-9001.

1.11 SUBMITTALS

A. With Quotation:
   1. Technical proposal that includes the design criteria table fully filled in.
   2. A high level P&ID with clear identification of the WWSS's scope of supply.
   3. A general arrangement drawing with major dimensions and the WWSS's scope and limits of supply identified.

4. Biological Nutrient Removal Equipment warranty
5. Projected annual chemical consumption for the system
6. Annual projected energy consumption for the system
7. Routine maintenance requirements (pumps, diffusers, controls, etc.)
8. Commercial proposal
9. Deviations from the specifications, if any

B. Provide submittals (after award) in accordance with the requirements of Section 01 33 00 and as specified herein.
   1. Copy of this Section, with each paragraph check-marked to indicate specification compliance or marked to indicate requested deviations from specification requirements.
   2. Check-marks (✓) to denote full compliance with a paragraph as a whole. Underline deviations and denote by a number in the margin to the right of the identified paragraph. The remaining portions of the paragraph not underlined will signify compliance. Include a detailed, written justification for each deviation.
   3. Failure to include a copy of the marked-up specification sections with justification(s) for any requested deviation will cause rejection of the entire submittal with no further consideration.

C. Coordination Meetings
   1. The WWSS shall meet with the Contractor for a kickoff meeting and other times to address any issues related to the project. The Meeting shall be held at a location to be determined by the Contractor and may last for 4 hours.
   2. Within 10 days after the issuance of the First Submittal the WWSS shall meet with the Contractor to review and receive comment regarding the Submittal. The meeting shall be for a period of an 8-hour day.
   3. Within 10 days after the issuance of the Second Submittal, the WWSS shall meet with the Contractor to review and receive comment regarding the Submittal. The meeting shall be for a period of an 8-hour day.
   4. Facility Equipment Meetings: WWSS shall participate in two (2) meetings to coordinate equipment design and facility layout. These meetings shall occur on separate trips and locations will be determined by the Contractor.
   5. Instrumentation and Control Coordination Meetings: Three (3) meetings to coordinate instrumentation and controls. These meetings shall occur on separate trips.

D. Drawings and Samples:
   1. First Submittal. The WWSS shall submit for review and approval in accordance with the Submittal Procedures the following information. All drawings shall be submitted in hardcopy format and electronically in .pdf and current AutoCAD (.dwg). The WWSS shall submit the following information:
      a. Schematics Drawings:
         1) Process flow diagrams detailing all Biological Nutrient Removal System processes and design flows.

2) P&IDs of the Biological Nutrient Removal System, including hydraulic and pneumatic schematics detailing the equipment supplied by the WWSS and showing equipment provided by others that will interface with the Biological Nutrient Removal System.
3) Provide a P&ID of the Biological Nutrient Removal System including hydraulic and pneumatic schematics detailing the size, quantity and control of equipment to be supplied or controlled by the WWSS.
4) Contractor WWSS shall follow project tag numbering system to be provided after award.
5) Electrical schematic diagrams including motor horsepower and other electrical load information and identification of external wiring (panel) connections and for coordination with the WWSS or Contractor supplied pumps and VFDs.

b. Include WWSS's literature, illustrations, specifications, weights, pump curves, and engineering data for component equipment of standard design including pumps, variable frequency drives, valves/actuators, instrumentation, flowmeters, analyzers, including dimensions, materials, sizes, and performance data.

c. Biological Nutrient Removal System Arrangement Drawings: The WWSS shall coordinate production and submit each of the following Arrangement drawings for approval:
1) Provide plan and elevation views of BNR units.
2) Provide a plot plan showing Biological Nutrient Removal System and equipment in WWSS's scope of supply.
3) Clearly identify the termination points and physical location for hydraulic, pneumatic and electrical connections where interfacing of the WWSS supplied equipment and equipment to be installed by the Contractor exists
4) Once submitted and approved, the "physical envelope" of the WWSS supplied equipment or termination points shall not change without approval of the Contractor
5) A bill of materials for all tagged devices and components supplied with the Unit including component original part numbers identifying each furnished component
6) Provide setting drawings, templates for the installation of anchor bolts and other anchorages for the units

2. Second Submittal. The WWSS shall submit for review and approval the following:
a. Piping Fabrication and Assembly Drawings: For all Biological Nutrient Removal piping, provide double-line scaled drawings showing all fittings, valves, instruments and supports.
1) Provide fabrication details for piping and structures elevation views of all major components and subsystems, detailing orientation of equipment, piping, fittings and valves (including valve actuators).
2) Identify piping materials and fabrication details
3) Each support shall be identified by catalog number or Submittal detail number.

b. Biological Nutrient Removal System Equipment and Devices:

1) A bill of materials for all tagged devices and components supplied with the Unit including component original part numbers identifying each furnished component. The bill of materials shall include the pertinent information associated with the equipment including tag number, description, functional name location, component equipment model, part number, size, materials, accessories and range.

c. Electrical system drawings and PLC line diagrams, including electrical panel and line drawings, panel layout drawings, and wiring diagrams.

d. Operator interface stations and supervisory control and data acquisition (SCADA) system submittals.

e. Design Calculations: include calculations for equipment anchorage and supports as required herein.

1) Design calculations related to sizing of key components, including the overall Biological Nutrient Removal System, BNR Tank Aeration Blower System and Appurtenances, assemblies, pumps, valves, Submittals for pump(s) and throttling and modulating valve(s) shall also include calculations to show that cavitation does not occur over the intended minimum and maximum operating range.

2) Structural Design Calculations for fabricated assemblies, bracing and anchorage as specified in Section 01 88 15.

3) Other submittals and/or Submittals as required under the Contract Documents.

f. Information as specifically requested by the Contractor in support of this Project. Include submittals for special tools or lifting equipment as required by the specifications.

E. Factory Test Reports

1. Submit Factory Acceptance Testing procedure and reports for the system

2. WWSS shall submit the following quality control reports:

a. Factory Test and WWSS Quality Control Reports for all equipment provided including the Factory Test Report for the PLC/HMI system functional performance test reports.

b. Factory Test Reports for all Control Panels

F. Installation Instructions:

1. WWSS shall submit Installation Instructions 30 days prior to shipment of any equipment.

2. For each shipment, WWSS shall provide the listing of the Goods to be delivered prior to the delivery of the Goods.

G. Equipment and System Performance and Operational Testing Plan:

1. The WWSS shall develop and submit a detailed equipment and system performance and operational testing plan for the review and acceptance of the Contractor.

H. Commissioning Plan:

1. The WWSS shall develop a detailed commissioning plan for the review and acceptance of the Contractor.
2. WWSS shall provide the “Detailed Plan of Commissioning Activities” prior to commencement of Commissioning of the Goods.

I. Operation and Maintenance Data
1. Provide operation and maintenance data in accordance with Section 01 78 23 and as specified in other sections of the Contract Documents.

J. Training Manuals:
1. Provide demonstration and training documentation as specified in this Section.
2. The WWSS shall develop and submit to the Contractor a Training Manual. The Training Manual shall include the elements presented in this Section or as required by the WWSS or component equipment supplier.
3. The WWSS shall prepare a Training Lesson Plan, provide qualified instructors, and schedule the training in an organized manner.
   a. All training material shall be provided to the Owner and Contractor in electronic format.
   b. Credentials for the WWSS’s designated instructor(s) shall be submitted prior to the commencement of training. Credentials shall include a brief resume and specific details of the instructor(s) pertaining both to personal experience operating and maintaining the specified equipment and conducting operation and maintenance for the same equipment.
   c. The WWSS’s proposed lesson plans shall detail specific instruction topics. Training aids to be utilized in the instruction shall be referenced and attached where applicable to the proposed lesson plan. "Hands-on" demonstrations planned for the instruction shall be described in the lesson plan.
   d. The WWSS shall indicate the estimated duration of each segment of the training in the lesson plan.

K. Record Drawings: After completion of Acceptance Testing the WWSS shall revise and submit to the Contractor revised O&M Manuals using “As-Built” information.

L. Certificates, Warranties and Guarantees
1. Biological Nutrient Removal System Warranty
2. Provide a listing of known chemical constituents, concentrations and exposure time that would result in voiding the BNR warranty.
3. For each of the above known chemical constituents, identify the instrumentation required, if possible, and to be provided by the WWSS as well as alarm limits necessary to satisfy the warranty provisions of this Section.

1.12 PRODUCT DELIVERY, STORAGE AND HANDLING

A. Product delivery, storage and handling shall be in accordance with Section 01 61 00.

1.13 WARRANTY

A. General Requirements

1. The WWSS shall warrant satisfactory performance of the Goods to achieve performance requirements without failure, including but not limited to hydraulic capacity, water quality, maximum process air (aeration) energy consumption, and maximum chemical consumption.
2. Warranties shall be valid as follows:
   a. The Biological Nutrient Removal System shall be warranted for twelve (12) months from the date of completion of commissioning.
3. In the event that the Owner or Contractor does not believe that the Goods meet the requirements of the Contract Documents, the Owner or Contractor will notify the WWSS that the conditions for a breach of warranty exist. The WWSS shall provide an acceptable remedy to the Contractor. If an acceptable remedy is not obtained, the Contractor shall notify the WWSS that a breach of warranty exists.
   a. If the Goods are non-conforming and not able to conform to the performance requirements, the Contractor will notify the WWSS.
   b. If after sixty (60) days from issuance of the notification to the WWSS it has become apparent to the Owner or Contractor that the remedy is not acceptable to the Owner or Contractor, the Contractor will provide notice to the WWSS that the conditions for breach of warranty exist. If within thirty (30) days thereafter an acceptable remedy is not obtained, the Contractor may notify the WWSS that a breach of warranty exists.
4. The Owner and Contractor recognizes that to remedy non-conforming performance, the WWSS may modify operational protocols. WWSS recognizes that any change to the operational protocols must be acceptable to the Owner and Contractor. Owner and Contractor recognize that the changes to operational protocols by the WWSS pursuant to the warranty are acceptable under the following conditions:
   a. The specified performance requirements, including hydraulic capacity, water quality, maximum process air (aeration) energy consumption, and chemical consumption, are maintained.
   b. Changes in operational protocols shall not increase operation and maintenance costs borne by the Owner and Engineer unless agreed by the Owner or Engineer.

PART 2 PRODUCTS

2.01 SYSTEM DESIGN REQUIREMENTS

A. See design criteria table in Drawing G-11 for details.

B. The following Specifications are applicable for the equipment for the Biological Nutrient Removal system.

1. 09 90 00 – Protective Coating
2. 43 05 11 - General Requirements for Equipment
3. 43 05 13 - Rigid Equipment Mounts

4. 43 05 14 - Machine Alignment
5. 43 05 21 - Common Motor Requirements for Equipment
6. 43 11 33 - Helical Screw Rotary Lobe Positive Displacement Blowers
7. 43 23 03 - General Requirements for Centrifugal Pumps
8. 43 23 89.13 - Horizontal Variable Speed, End Suction Centrifugal Pumps
9. 43 24 41 - Rotary Lobe Axially Conv Rotor Pumps
10. 43 40 04 - Welded Steel Tanks
11. 46 51 36 - Fine Bubble Diffusion Equipment
12. 46 41 41 - Top Entering Tank Mixers
13. 40 05 59.23 - Fabricated Slide Gates

C. General BNR System Requirements
1. The BNR System shall be suitable for use in a municipal wastewater plant to treat municipal sewage through a biological nutrient removal process.
2. The WWSS is responsible for designing, fabricating, assembling, programming, and testing the control panels and other control systems associated with the BNR Control System and for interfacing with the CASSF Control System.
3. Interconnecting Piping and Valves: The Contractor is responsible for supplying, installing and testing all interconnecting piping and valves not specified as part of the BNR System. The Contractor is also responsible for installation and testing of all equipment, components and appurtenances furnished by the WWSS in conjunction with the WWSS as specified.
4. Interconnecting Conduit and Cabling: The Contractor is responsible for supplying, installing and testing all interconnecting conduit and cabling for power and control systems that will be outside Biological Nutrient Removal System Control System control panels and that are not included as integral parts of equipment and appurtenances included in the Biological Nutrient Removal System. The Contractor is also responsible for installation of all equipment, components and appurtenances furnished by the WWSS.
5. The Contractor shall complete testing of the Biological Nutrient Removal System and BNR Control System in conjunction with the WWSS as specified.

D. Biological Nutrient Removal basins and WAS Box
1. The Biological Nutrient Removal basins shall be divided into the following sections: DeOx Tank, Anoxic Zone 1, Anoxic Zone 2, Aerobic Zone 1, Aerobic Zone 2 and WAS Box as shown on drawing G-09/G-10– PROCESS FLOW DIAGRAM 1/2. Design criteria including dimensions and capacities of each section are as shown on Drawing G-11 - DESIGN CRITERIA– PROCESS 1.
2. Support Structures
   a. All BNR equipment, piping, and appurtenances shall be supported on structural frames designed and supplied by the WWSS.
   b. Support structures shall be designed by the WWSS to resist gravity, hydraulic and seismic forces on the modules, piping and other related equipment supported by the frame as specified in Section 01 88 15. The frames shall be designed in conformance with the latest edition of the California Building Code

(CBC) including seismic forces as required by local building code officials and signed by a Registered Professional Engineer currently licensed in the state of California.

E. IMLR Pump Systems
1. The Supplier shall supply one skid-mounted IMLR Pump. This IMLR pump returns mixed liquor from the end of the aeration tank to the DeOx tank. The IMLR pump shall allow for control of the MBR TSS concentrations for testing purposes.
2. Refer to Section 43 23 03 - General Requirements for Centrifugal Pumps.

Intermediate Mixed Liquor Pumps		
Number of Pumps	No.	1 (1 duty. no standby)
Type	-	Horizontal Centrifugal
Rated Capacity, each	gpm	832
Rated Head	ft	25
Motor Size	HP	15
Drive	-	VFD

F. Mixed Liquor Pumps
1. The Supplier shall supply one skid-mounted Mixed Liquor Pump in piggy-back configuration. The Mixed Liquor rotary lobe pump shall pump mixed liquor from the BNR tank to the MBR membrane tank to facilitate operating the BNR tank at varying hydraulic retention times.
2. Refer to Section 43 24 41 – Rotary Lobe Axially Conv Rotor Pumps.

Mixed Liquor Pump		
Number of Pumps	No.	1 (1 duty. no standby)
Type	-	Rotary lobe
Rated Capacity, each	gpm	1,040
Rated Head	ft	15
Motor Size	HP	10
Drive		VFD

G. BNR Tank Aeration Blower System and Appurtenances
1. The Biological Nutrient Removal System shall use an aeration blower system to operate under all plant operating modes. The aeration blower system shall be designed to supply air continuously or intermittently to the BNR Tank in the aeration zones 1 and 2 respectively, at flow rates designated by the WWSS.
2. The aeration blower system shall be controlled by the BNR Control System and provided by the WWSS. When permitted to operate, the vendor PLC will manage the blowers in lead/lag/standby fashion to maintain an operator-entered fixed flow

setpoint (as confirmed by the summed readings of the air flow meters) OR an operator entered DO setpoint (as measured by the aerobic tank in situ DO probe).

3. The BNR Control System shall monitor air-flow to ensure that the correct amount of air is being supplied to the aeration zones. Exact quantity for channel aeration will be coordinated with the selected WWSS.
4. WWSS shall supply each blower with the following accessories:
   a. Open/close butterfly valve with manual operator on discharge side
   b. Dual disc check valve on discharge side
   c. Pressure relief valve
5. WWSS shall supply each aeration zone with the following accessories:
   a. Modulating butterfly valve with powered actuator suitable for cyclic operation if intermittent aeration is provided
   b. Thermal dispersion flow metering system with flow conditioner
   c. Fine Bubble Diffusers refer to Section 46 51 36 Fine Bubble Diffusion Equipment.
6. Refer to Section 43 11 33 - Helical Screw Rotary Lobe Positive Displacement Blowers

H. Miscellaneous
1. Anchor Bolts:
   a. The WWSS shall be responsible for the design, sizing, selection, and supply of all anchor bolts required for equipment supplied by the WWSS as specified in Section 01 88 15 and Section 05 05 20. Anchor bolts shall be Type 316 stainless steel conforming to ASTM A 320 and as specified in Section 05 05 20.
2. Lifting Lugs and Attachments: All equipment items or component assemblies weighing in excess of 100 pounds, including BNR sub-units, shall be furnished with lifting lugs and any necessary devices to allow lifting by a bridge crane hook.
3. Miscellaneous Fasteners: Bolts, nuts, washers, flange backing rings, and other miscellaneous metal components not specifically addressed elsewhere in these specifications shall be Type 316L stainless steel.

2.02 FABRICATION AND MATERIAL REQUIREMENTS

A. Stainless Steel Pipe
1. All Stainless steel pipe shall be grade 316L.
2. All stainless steel pipes, fittings, and assemblies shall be pickled and passivated per ASTM A380 after fabrication.

B. Provide the following materials of construction for all gauges, switches, chemical seals and transmitters that come in contact with the following list of process fluids or air equipment and components unless otherwise specified. These materials take precedence over any materials specified in other sections.

Process (Fluid)	Diaphragm and wetted parts	O-ring/Gasket/Seals	Non-wetted housing	Non-wetted bolting
Aeration Blower System - air	316 SS	Teflon Or 300 deg. F material	316 SS	316 SS

2.03 BIOLOGICAL NUTRIENT REMOVAL PROCESS SWITCHES, METERS AND ANALYZERS

A. The following Specification Sections are applicable for the instruments for the Biological Nutrient Removal system.
   1. 40 91 02 - In-Line Liquid Flow Measuring Systems
   2. 40 91 06 - Level Measuring Systems
   3. 40 91 08 – Pressure Measuring Devices
   4. 40 91 10 - Temperature Measuring
   5. 40 91 12 – Process Analyzing Measuring Systems

B. Requirements for numbers and locations of instruments specified below are the minimum that shall be provided. Provide additional instruments as required for proper operation of the Biological Nutrient Removal System.

C. Flow Measurement
   1. Magnetic Flow Metering Systems (FM)
      a. Provide magnetic flow metering systems as specified in Division 40 to monitor each liquid flow stream.
   2. Thermal Dispersion Flow Metering Systems (FTD)
      a. Provide thermal dispersion flow metering systems.
      b. At a minimum, provide one FTD flow metering system at each BNR tank to monitor BNR aeration flow streams to each BNR tank separately.
      c. WWSS shall coordinate to ensure proper pipe sizes, mounting, and process applications.
   3. Low-Flow Rotameter Flowmeter with Controller (FR)
      a. Provide low-flow rotameter flowmeters with controllers.
      b. At a minimum, provide low-flow rotameters with controllers at the following locations:
         1) Sample feed to each turbidimeter
      c. Each rotameter shall be supplied with a check valve, needle valve to control flow and a stainless steel isolation ball valve.

D. Level Measurement
   1. Float Switches, Free Floating (LFS)
      a. Provide free floating level switches to monitor liquid level in each BNR zone.
   2. Level Transmitter Systems, Top Mounted (LTT) and Flange Mounted (LFT)

a. Provide hydrostatic top mounted or flange mounted level transmitter systems to monitor liquid level in each BNR tank separately.

E. Pressure, Strain and Force Measurement
1. Diaphragm seals
a. Provide diaphragm seals and isolation stainless steel ball valves with all pressure instruments specified below.
b. Construction Features required for all seals:
1) Diaphragm seals shall be provided with flushing connections and shall have a Type 316 stainless steel body unless otherwise specified.
2) Provide fill/bleed screw to permit filling of instrument and diaphragm seal
3) Provide a clean-out ring which holds the diaphragm captive in the upper housing to allow the upper housing assembly to be removed for recalibration or cleaning of the process side housing without the loss of filling liquid or change in calibration.
4) Instrument Connection: 1/2-inch NPT
5) Process Connection: 1/2-inch NPT
6) Working Pressure Rating: Equal to or greater than the attached gauge or switch operating pressure range or the connected process piping system test pressure, whichever is greater.
7) Bolting Materials: Stainless Steel
a) Manufacturer and Model:
(1) Ashcroft, Type 101
(2) Mansfield and Green Type SG
(3) Or approved equal
2. Pressure Gauges (PG)
a. Provide pressure gauges to monitor process pressure, including but not limited to the following locations:
1) Suction and discharge of each pump
2) Discharge of each aeration blower
3. Pressure Switches (PS)
a. Provide pressure switches to monitor process pressure, including but not limited to the following locations:
1) Provide two (redundant) high-pressure switches discharge of each pump.
2) Provide two (redundant) low-pressure switches on aeration air system piping.

F. Process Liquid Analytical Measurement
1. Optical Indicating Turbidimeter (ATI)
a. Provide optical indicating turbidimeter systems to monitor filtrate turbidity, including but not limited to the following locations:
1) Provide turbidimeters and other analyzers in accordance with P&IDs.

2.04 VALVES

A. Provide valves in accordance with Specification 40 05 60 and other sections referenced therein.

2.05 ACTUATORS

A. Provide valve actuators as specified in Section 40 06 20.13.

2.06 BNR CONTROL SYSTEM

A. General Requirements
   1. The WWSS shall provide labor, materials and incidentals to furnish, program, test, and place in operation the instrumentation and control system equipment associated with the BNR Control System. The system includes, but is not necessarily limited to the following equipment:
      a. Primary sensor/transducers, analytical instrumentation, field instruments, and associated mounting hardware.
      b. The programmable controller system including control panels, processors, communications modules, input/output racks, input/output modules, and local panel mounted human machine interface (HMI) stations.
      c. SCADA software control system provided by the WWSS.
      d. Operator Interface Terminals (desktop or laptop computers) will be provided by the Contractor.
      e. PLC panels, Local Control Panels, and enclosures.
   2. Provide, program, test and configure the BNR Control System such that the HMI and PLC programming and logic are integrated and compatible with the Contractor-provided Plant Control System for the balance of the plant.

B. The following Specifications are applicable for the instruments for the Biological Nutrient Removal System.
   1. 26 05 00 – Common Work Results for Electrical
   2. 26 09 16 – Electrical Controls and Relays
   3. 40 91 00 – Process Control and Instrumentation Systems
   4. 40 91 02 – In-line Liquid Flow Measuring Systems
   5. 40 91 06 – Level Measuring Systems
   6. 40 91 08 – Pressure Measuring Devices
   7. 40 91 12 – Process Analyzer Measuring Systems
   8. 40 92 00 - Control Panels
   9. 40 95 10 – PLC-Based Control Systems Hardware
   10. 40 95 20 – PLC-Based Control Systems Software

C. Functional Description
   1. The WWSS shall provide a fully automated control of the Biological Nutrient Removal System, with manual operator control options available for selected systems.

2. The BNR Control System shall consist of redundant main control panels with an HMI and PLCs and remote I/O modules and within other local control areas to monitor and control all Biological Nutrient Removal Systems provided by the Contractor.
3. The WWSS shall provide local OIT and HMI connections at within all panels provided by the WWSS.
4. The HMI stations shall be provided and configured by the WWSS. The WWSS shall develop the operator interface screens for the control station. The HMI station shall provide complete system monitoring and operator control capability with programming input capability.
5. The WWSS shall be responsible for development of a completely integrated PLC-based control system program with HMIs that provides full automatic and manual monitoring and control of the Biological Nutrient Removal System and related systems provided by the Contractor as specified.
6. Systems status, operation, monitoring, alarming, and data archiving shall also be included in the BNR Control System provided by the WWSS. In general, all mechanical equipment, power-actuated valves and instruments shall be continually monitored for physical conditions (run status, level, etc.). Alarms shall be provided for system malfunctions or high/low levels, etc. Archived data shall include such system parameters as tank water levels, run times, instantaneous and cumulative flows, water quality data, BNR operational functions (resistance, permeability, backwashes, CIP cycles, physical integrity tests, etc.), and similar data which would be of value for regulatory and/or operations and maintenance (O&M) purposes.
7. The PLC shall be designed to manage all Biological Nutrient Removal System sequences and other sequences as required.
8. The Biological Nutrient Removal System shall be capable of being accessed from the Plant SCADA System and the BNR SCADA system.

D. PLC Software Programming Requirements
1. WWSS shall develop and test process control software for the BNR Control System.
2. The logic system shall be designed such that in the event of a PLC communication level failure or the failure of a SCADA station, the system shall retain the ability to function without disruption of the process or the intervention of an operator.
3. WWSS shall develop a Supervisory Control and Data Acquisition (SCADA) system required for the operation, monitoring, trending logging and reporting functions of the Biological Nutrient Removal System. The SCADA system described in the section is based on FactoryTalk View SE.

PART 3 EXECUTION

3.01 SEQUENCE OF WORK

A. The WWSS and Contractor shall jointly complete installation, testing and commissioning of the Biological Nutrient Removal System in the following sequence:

1. Installation of all components of the Biological Nutrient Removal System.
2. Performance and operational testing of all components of the Biological Nutrient Removal System
3. Performance and operational testing of the complete Biological Nutrient Removal System
4. Commissioning of complete system

3.02 DELIVERY AND INSTALLATION

A. Comply with product storage and handling requirements specified in Section 01 61 00 and as specified herein.

B. The WWSS shall train the Contractor on installation of all supplied BNR equipment, including ancillary components. Installation instructions shall include any and requirements prescribed by the WWSS or its manufacturers for the proper unloading, handling, assembly, placement, connection, or wiring of the Goods. The training shall be conducted on-site by an authorized, experienced, employee of the WWSS.

C. The WWSS shall provide a minimum of 10 days of on-site assistance during the installation, including a minimum of 4 trips. This time is not to be included in the days specified for other testing, training or commissioning.

D. An employee of the WWSS shall be present on-site to witness and supervise the unloading and the proper placement and positioning of the BNR system and significant ancillary equipment.

E. After the installation of all Biological Nutrient Removal System components, the WWSS, and Contractor shall jointly perform a pre-testing inspection of the system. The inspection shall include the following before performance and operational testing commence:
   1. Mechanical
      a. The mechanical inspection shall include equipment installation check.
   2. Electrical
      a. All local control panels shall be installed, and terminations completed.
      b. All power supplies shall be connected and verified.
      c. The documentation associated with the inspection of electrical terminations will be provided by the Contractor to the WWSS.

3.03 FACTORY ACCEPTANCE TEST

A. WWSS shall complete Factory Acceptance Testing (FAT) of the BNR Control System. At the discretion of the Contractor, the Owner and/or Contractor will witness the testing. The travel costs and associated expenses for the Owner/Contractor will be borne by the Contractor.

B. WWSS shall pre-test the BNR Control System at the WWSS's facility to ensure it is operational and ready for installation prior to delivery to the project site.

C. Each control panel shall be tested by the WWSS in accordance with the pre-approved test procedure, and with power applied to the panel. The PLC inputs and outputs shall be simulated at the panel field wiring terminal blocks using test panels. Connect the PLC I/O to the remote processor. Configure a test PLC program for each PLC to allow checking of all simulated field I/O, using the specified PLC programming software. The test shall be performed on an input/output point-by-point basis. The WWSS shall rectify all deficiencies found prior to shipment to the project site.

D. See Sections 01 91 13 and 01 91 14 for additional requirements.

3.04 EQUIPMENT AND SYSTEM PERFORMANCE AND OPERATIONAL TESTING

A. WWSS shall complete equipment and system performance and operational testing in conjunction with the Contractor.

B. The WWSS shall provide a minimum of 20 calendar days of on-site performance and operational testing support and shall include a minimum of 4 trips to the project site during the period. This time is in addition to time for installation, training and other support services specified elsewhere.

C. Initial performance and operational testing by the WWSS in conjunction with the Contractor shall include the following:
   1. Initial Start Up Activities
      a. Verify Unit and Piping Installation
      b. Verify Valve Tags
      c. Verify Data Highway System
      d. Verify PLC Communication
      e. Verify PC or Operator Interface Communication
      f. Verify system interconnections
      g. Verify Pumps for Rotation
      h. Commission Compressed Air System (PLC Interface)
      i. Commission Blower System (PLC interface)
      j. Test Modulating Valves
      k. Test Chemical Feed Systems used for feed, backwash, and filtered water
      l. Test Chemical Feed Systems used in Clean In Place and/or Maintenance Clean
      m. Test Level Switches in Tanks
      n. Test Pressure Switches
      o. Set Mechanical Seals in Pumps and Flush System.
      p. Test and Calibrate Process Instruments and Equipment supplied by WWSS:
         1) Flow Meters
         2) Pressure Transmitters
         3) Level Transmitters
         4) Turbidity Meters
         5) Temperature Transmitters

6) Miscellaneous Equipment
7) Field Located Manual Valves
8) Field Located Automatic Valves
9) Manual Unit Valves
10) Automatic Unit Valves

q. Verify that BRN basins and piping systems have been flushed and cleaned by the Contractor.

D. BNR Control System and Biological Nutrient Removal System Start Up Activities

1. WWSS shall test the BNR Control System.
2. Perform an operational readiness test. PLC, hardware and software shall be tested to verify proper operation as an integrated system. System testing shall include, as a minimum, the following:
   a. Digital inputs shall be activated at the field element to verify proper response to the status change and automatic control algorithm stability. Control loops shall have the PID values recorded, in a separate file location so in event of a system failure the process parameters can be restored.
   b. Analog inputs shall be tested at the field transmitter over a full range to verify proper response.
   c. Digital and analog outputs shall be forced to verify proper control operation.
   d. Communications, including PLC data highway, computer local area network, PLC remote I/O, and serial communications shall be tested between all components.
   e. Alarm displays shall be tested for analog and digital alarm points. Alarm set points shall be recorded in a separate location, so that in event of a system failure the process parameters can be restored.
   f. Automatic control algorithms shall be completely tested over various ranges and input conditions to verify proper operation. Displays shall be observed to verify proper response to automatic control operations.
   g. Historical data collection, trending, computation, totalization and reporting functions shall be checked and tested to confirm proper operation and accuracy of the data.
   h. Defects or problems found during the Commissioning effort or field test shall be corrected by the WWSS and then re-tested to demonstrate proper operation.
3. Complete testing of the following modes of operation:
   a. Feed Flow / Pressure / Level Control System in Manual the Automatic Mode
   b. Permeate Pressure Flow / Pressure / Level Control System in Manual the Automatic Mode
   c. Backwash Flow / Pressure Level / Control System in Manual the Automatic Mode
   d. Backwash Process Residuals Flow / Pressure Level / Control System in Manual the Automatic Mode
   e. Filtration Units Placed into Service in Manual the Automatic Mode

f. Check Start Up Sequence in Normal and Emergency Modes
g. Check Shut Down Sequence in Normal and Emergency Modes

4. Check Process Logic Interlocks.
5. Verify that Contractor has completed flushing and pressure testing of piping.
6. Supervise installation of Biological Nutrient Removal System
7. Place Biological Nutrient Removal System in Operation

E. Calibration Certificates
1. WWSS shall furnish to the Contractor calibration reports for field instruments and devices specified and panel mounted devices when calibration is completed.
2. The calibration certificate forms shall be prepared and furnished by WWSS.
3. Each calibration certificate shall be signed and dated by an authorized representative of WWSS.

F. The WWSS shall perform a functional test of the combined software/hardware system. The purpose of the test is to ensure that the PLC and Operator Graphics software configured is working in conjunction with the hardware and plant as specified. This test is accomplished with the system on-line under normal operating conditions. Application software problems encountered during the test will be investigated and corrected by the WWSS. The WWSS shall provide a qualified person familiar with the installation and panels, during the test.

G. Contractor Tests shall be conducted by the WWSS to establish a clean water base line permeability chart for the Biological Nutrient Removal System. Measurements of TMP vs Flux at 25%, 50%, 75%, 100% and 125% design flux shall be taken 1 hour after cleaning. Water temperature at the time of data collection shall be documented. Potable water will be used for the clean water testing.

3.05 COMMISSIONING

A. WWSS shall complete commissioning in conjunction with the Contractor.

B. The WWSS shall provide a minimum of 20 calendar days of on-site commissioning support and shall include a minimum of 4 trips to the project site during the commissioning period. This time is in addition to time for support services specified elsewhere.

C. Unless otherwise allowed by the Contractor, the WWSS shall not conduct Commissioning except during normal business or construction hours, 5 days per week, 8 hours per day.

D. Commissioning shall be performed for the following systems
1. Biological Nutrient Removal System
a. BNR tank & WAS Box
b. Top-Entering Tank Mixers
c. DeOx Mixer 1
d. Anoxic Mixer 1

e. Anoxic Mixer 2
f. BNR tank Aeration Blower System and Appurtenances
g. Intermediate Mixed Liquor Return (IMLR) Pump System
h. Mixed Liquor (ML) Pump System

E. WWSS shall be responsible for initial operation of the BNR Control System and shall make any required changes, adjustment or replacements for operation, monitoring, and control of the various processes and equipment necessary to perform the functions intended.

F. WWSS shall perform checkout and start-up of system components. As part of these services, the WWSS shall include for those equipment items not manufactured by him the services of an authorized manufacturer's representative to check the equipment installation and place the equipment in operation or provide letters from manufacturers authorizing the WWSS to put equipment in operation.

G. No system or subsystem shall be started-up for continuous operation unless all Goods, including instrumentation and monitoring systems, of that system or subsystem have been tested and proven to be operable as intended by the Contract Documents.

H. The WWSS shall coordinate all commissioning activities with the Contractor. The types of activities to be performed by the WWSS shall be detailed in the testing and commissioning plans prepared by the WWSS.

3.06 TRAINING OF OPERATIONS AND MAINTENANCE PERSONNEL

I. Description of Work:
1. WWSS shall provide demonstration and training for the Biological Nutrient Removal System.
2. The WWSS shall provide a minimum of one (1) full 8-hour day of training on the Biological Nutrient Removal Equipment. This training is in addition to training requirements specified elsewhere.
3. Training shall be performed by the WWSS and component equipment suppliers. The WWSS shall be responsible for the training on the design and operation of the equipment and systems provided. and shall include the following:
   a. Biological Nutrient Removal System
      1) Biological Nutrient Removal Theory
      2) Biological Nutrient Removal System
      3) Biological Nutrient Removal Units
      4) Biological Nutrient Removal Processes
         a) Start Up, Shut Down
         b) Routine and Non-Routine Maintenance
   b. Component Equipment Training
      1) Equipment (including pumps, compressors)
      2) Valves, actuators, and positioners
   c. Instrumentation and Control Component Equipment Training

1) Switches
2) Meters and Transmitters
3) Analyzers

d. Instrumentation and Control Programmable Logic Control/HMI Training
1) Programmable Logic Control Equipment
2) HMI System Training

J. Hands–On Demonstration
1. The WWSS's instructor shall present "hands-on" demonstrations of operations and maintenance of the WWSS supplied and component equipment. The proposed "hands-on" demonstrations should be described in the WWSS's proposed lesson plan.

3.07 OPERATIONAL ASSISTANCE

A. Operation Assistance to the Contractor:
1. WWSS shall provide operational assistance to the Contractor during the initial operating period as specified.
2. General Operations Assistance shall consist of:
a. WWSS shall provide online monitoring of recommended operating data from the Plant's control system and review of other data provided by the Contractor.
b. Review of Biological Nutrient Removal Unit Operational Logs
c. Review and Modification of PLC/HMI Programming Software to address performance issues.
d. Review of component equipment operation.
e. Assistance to the Contractor's personnel during normal working hours.
f. Answer Contractor's questions regarding performance of the Biological Nutrient Removal System.
g. Respond to Warranty notices or claims.
3. During Year 1 of operation following commissioning, the WWSS shall provide the following:
a. Monthly reports covering system performance, status and proposed actions.
b. Quarterly site visits, inspection of a representative sample of the BNR and status reports.

END OF SECTION

THIS PAGE INTENTIONALLY LEFT BLANK

SECTION 46 41 41
TOP-ENTERING TANK MIXERS

PART 1 GENERAL

1.01 DESCRIPTION

A. Scope: This section specifies mixing equipment for deoxygentation and anoxic tanks. The mixers shall be a complete assembly with electric motor, gear reducer, mechanical seal, shafts, impeller, and all specified appurtenances, mounted on a common pedestal base. The Contractor shall assign unit responsibility as specified in Section 43 05 11-1.02 Unit Responsibility to the Wastewater System Supplier (WWSS) for the equipment specified in this Section.

B. Type: Mixers shall consist of an electric motor, high-speed flexible coupling, bearing housing, impeller shaft, and impellers. Impeller shafts shall be of the overhung design--underwater guides or bearings will not be accepted.

C. Equipment List:

Item	Equipment number
Deoxygenation (Deox) Tank Mixer	MXR-400
Anoxic Zone 1 Mixer	MXR-401
Anoxic Zone 2 Mixer	MXR-402

D. Performance and Design Requirements:

1. Mixing intensity shall be vigorous enough to ensure complete mixing, uniform blending, and constituent equalization within the hydraulic retention time of the tank. Solids shall not settle within the tank.

	Equipment No.	
	MXR-400	MXR-401, MXR-402
Main process flow stream:		
Description	Return Activated Sludge (RAS) and Mixed Liquor Return (MLR) Combined	Mixed Liquor
MLSS Concentration	≤ 10,000 mg/L	≤ 6,000 mg/L
Specific Gravity	1.0	1.0
Liquid Temperature	70 – 90 deg F	70 – 90 deg F
Tank Dimensions	10 ft (W) x 5 ft (L) x 23 ft (H) (20 ft SWD / 7,480 gal)	10 ft (W) x 7.25 ft (L) x 23 ft (H) (20 ft SWD / 10,850 gal)
Hydraulic Retention Time with 400% Return	7.0 min	10.4 min
Motor Voltage	460/3/60	460/3/60

	Equipment No.	
	MXR-400	MXR-401, MXR-402
Main process flow stream:		
Motor HP	*	*
Gear Service Factor, minimum	1.5	1.5
Impeller diameter, inches	*	*
Impeller shaft speed, rpm	*	*
Operating speed/first critical speed ratio, maximum	*	*
Minimum impeller shaft diameter, inches	*	*
Minimum impeller centerline elevation	*	*

* *Vendor to Specify*

1.02 QUALITY ASSURANCE

A. References

1. This section contains references to the following documents. They are a part of this section as specified and modified. Where a referenced document contains references to other standards, those documents are included as references under this section as if referenced directly. In case of conflict between the requirements of this section and those of the listed documents, the requirements of this section shall prevail.
2. Unless otherwise specified, references to documents shall mean the documents in effect at the time of Advertisement for Bids or Invitation to Bid (or on the effective date of the Agreement if there were no Bids). If referenced documents have been discontinued by the issuing organization, references to those documents shall mean the replacement documents issued or otherwise identified by that organization or, if there are no replacement documents, the last version of the document before it was discontinued. Where document dates are given in the following listing, references to those documents shall mean the specific document version associated with that date, regardless of whether the document has been superseded by a version with a later date, discontinued or replaced.

Reference	Title
AFBMA Std 9	Load Ratings and Fatigue Life for Ball Bearings
AFBMA Std 11	Load and Fatigue Life for Roller Bearings
AGMA 250.04	Lubrication of Industrial Enclosed Drives
AGMA 297.02	Sound for Enclosed Helical, Herringbone, and Spiral Bevel Gear Drives

Reference	Title
AGMA 390.03a	Gear Classification, Materials, and Measuring Methods for Bevel, Hypoid, Fine Pitch Worm Gearing and Racks Only as Unassembled Gears
AGMA 6010-E	Spur, Helical, Herringbone, and Bevel Enclosed Drives
AGMA 9002-A	Bores and Keyways for Flexible Couplings
AISI	Pocketbook of AISI Standard Steels

B. Unit Responsibility: The Contractor assigns unit responsibility, as specified in Section 43 05 11, to the WWSS for provisions of all equipment specified in this section. The WWSS is the unit responsibility manufacturer and has unit responsibility, as specified in Section 43 05 11, for both the equipment assembly specified in this section and for the motors specified in Section 43 05 21, and all other equipment assembly components specified elsewhere but referenced in this section. A completed, signed, and notarized Certificate of Unit Responsibility (Section 01 99 90 -Form 43 05 11-C) shall be provided.

C. Manufacturer's Experience: Equipment furnished under this Section shall be of a design and manufacture that has been successfully used in similar applications. The manufacturer shall have furnished similar equipment at wastewater treatment facilities that have been in successful operation.

D. Factory Testing:
   1. Perform manufacturer's standard test. The City shall be afforded the opportunity to witness this test (does not indicate that the City is certain to exercise this option). Supplier shall notify the Contractor of any scheduled testing a minimum of one week in advance.
   2. See Section 01 45 33 for additional inspection requirements.

E. Shipment, Protection and Storage: The equipment shall be protected during shipment and storage as specified in Section 01 61 00.

1.03 ENVIRONMENTAL CONDITIONS

A. The equipment to be provided under this section shall be suitable for continuous outdoor operation with the shaft and mixer submerged in return activated sludge and mixed liquor at a wastewater treatment plant. Equipment shall be designed and selected for continuous duty mixing of return activated sludge and mixed liquor with characteristics as indicated in section 1.01 D- Performance and Design Requirements

1.04 SUBMITTALS

A. The following information shall be submitted in accordance with Section 01 33 00:
   1. A copy of this specification section, with addendum updates included, and all referenced and applicable sections, with addendum updates included, with each paragraph check-marked to indicate specification compliance or marked to indicate requested deviations from specification requirements. Check marks (ü) shall denote full compliance with a paragraph as a whole. If deviations from the

specifications are indicated, and therefore requested by the WWSS, each deviation shall be underlined and denoted by a number in the margin to the right of the identified paragraph, referenced to a detailed written explanation of the reasons for requesting the deviation. The Engineer shall be the final authority for determining acceptability of requested deviations. The remaining portions of the paragraph not underlined will signify compliance on the part of the WWSS with the specifications.

2. A copy of the contract document control diagrams and process and instrumentation diagrams relating to the submitted equipment, with addendum updates that apply to the equipment in this section, marked to show specific changes necessary for the equipment proposed in the submittal. If no changes are required, the drawing or drawings shall be marked *"no changes required"*.
3. Manufacturer's product literature, dimensioned drawings of mixer layout, anchorage and base details, seal construction details, impeller diameter and details, shaft diameter and speed, and materials of construction.
4. Mixer weights and loads transmitted to the supporting structure.
5. Motor submittal data as specified in Section 43 05 21.
6. Certificate of Unit Responsibility Section 43 05 11-Form C, attesting that the WWSS has accepted unit responsibility in accordance with the requirements of this section and Section 43 05 11. No other submittal material will be reviewed until the certificate has been received and found to be in conformance with these requirements.

B. See Sections 01 77 00 and 01 78 23 for requirements of Closeout Submittals and Operation and Maintenance Data.

PART 2 PRODUCTS

2.01 ACCEPTABLE PRODUCTS

A. The mixers shall be Philadelphia Mixers, Lightnin, Chemineer, Sharpe, or approved equal modified to provide the specified features and to meet specified operating requirements.

2.02 MATERIALS

A. Materials of construction shall be as follows:

Component	Material	
	Deox Tank Mixer	Anoxic Zone 1 Mixer Anoxic Zone 2 Mixer
Shaft	316 SS	316 SS
Impeller	316 SS	316 SS
Miscellaneous wetted parts	316 SS	316 SS
Anchor bolts	316 SS	316 SS

B. Materials specified are considered the minimum acceptable for the purposes of durability, strength, and resistance to erosion and corrosion. The WWSS may propose alternative materials for the purpose of providing greater strength or to meet required stress limitations. However, alternative materials must provide at least the same qualities as those specified for the purpose.

2.03 EQUIPMENT FEATURES

A. General::The mixer shall consist of a heavy-duty gear speed reducer, drive motor, support members, shaft, and turbine impeller. Each drive shall have a vertical or horizontal input shaft and vertically downward output shaft. Outline dimensions and anchor bolt pattern shall be compatible with the installation conditions specified.

B. Gear Reducer and Motor:

1. The speed reduction shall be made with inline concentric planetary gears. These gears will be designed for 24 hour per day mixer duty service with an AGMA service factor of 1.5 or greater. Gears shall be lubricated with lifetime synthetic grease. Anti-rotation pins are positioned with sufficient float to allow the ring gear to self-center.
2. Shaft bearings shall be ball type and sealed for life. The AFBMA bearing life shall be 100,000 hours or greater when rated at the design speed and motor horsepower. Oil seals will be provided on both bearings for gear reduced mixers.
3. Motors will be nema standard C face design. All motors will be UL rated and have a NEMA B temperature rise. Each mixer shall be driven by a vertical C-faced motor connected to the speed reducer through a flexible coupling, complete with coupling guard. Coupling and coupling guard shall comply with Section 43 05 11 requirements. Motors shall be energy-efficient, type 2, motors in accordance with section 43 05 21. Motor speed shall not exceed 1800 rpm.
4. Motor ball bearings will be permanently lubricated double sealed and mechanically or chemically clamped. Insulation shall be Class F minimum. A handle will be provided on the motor to help in mixer handling. The handle will allow lifting of 300 pounds with a 2.0 service factor. Three-phase TEFC motors will have a 1.15 service factor. Motor shaft and mixer drive shaft will be of concentric design to minimize radial loads on the motor bearings.

C. Impeller Shaft:

1. The shaft shall be attached to the mixer by a rigid coupling. The rigid coupling halves shall be machined with a rabbet for concentricity. Safety guards for rigid couplings will be provided.
2. The shaft shall be centerless ground and finished for straightness and cleanliness. The material of construction shall be as specified in Paragraph 2.02 - Materials. The total indicated shaft run out (TIR) should be less than 2 millimeters per meter of shaft length when turned by hand.

D. Impeller: Mixers shall have one or two impellers to achieve the process function. The material of construction will be as specified in Paragraph 2.02- Materials and shall meet all of the process parameters detailed in paragraph 1.01 D Performance and Design Requirements. Impellers will be set screwed or welded to the shaft. Low speed

impellers shall be high efficiency axial flow design with constant discharge velocity across the impeller diameter.

E. Mounting: Mixers shall be mounted on walkway area surrounding the mixers. Walkway area to be designed based on the required supporting structures for the mixers. Coordinate with the Welded Steel Tank Supplier per Section 43 40 04.

2.04 TOOLS AND SPARE PARTS

A. Special Tools: Special tools, if required for normal operation and maintenance, shall be furnished with the equipment.

B. Spare Parts:
   1. The following spare parts shall be provided for each size mixer:
      a. Two complete sets of oil seals
      b. Two complete sets of bearings
   2. Spare parts shall be tagged and stored as specified in Section 43 05 11.

PART 3 EXECUTION

3.01 INSTALLATION

A. The mixers shall be installed as specified and in accordance with manufacturer's written recommendations. The installation and initial operation shall be certified by the WWSS.

3.02 TESTING

A. After completion of installation, the mixers shall be completely factory tested to ensure compliance with operating requirements as specified. A factory trained representative shall test the installed equipment at full load and full speed for a minimum of 4 hours after oil temperature has stabilized. The reducer housing and shaft seals shall be checked for leaks during the test. Oil temperature shall be recorded at intervals of no greater than 15 minutes and shall not exceed the manufacturer's recommended maximum. Sound level shall be recorded and shall not exceed 80 dBA at a distance of 3 feet from the equipment.

END OF SECTION

SECTION 46 51 36

FINE BUBBLE DIFFUSION EQUIPMENT

PART 1 GENERAL

1.01 DESCRIPTION

A. Scope: This section specifies fine bubble diffusion equipment for the distribution of aeration air to satisfy process oxygen requirements and maintain solids in suspension in a municipal wastewater process.

B. Definitions:
   1. Standard cubic feet per minute (scfm) shall refer to airflow rate at standard conditions. Standard conditions shall be defined as 68 degrees F, 14.7 psia, and 100 percent relative humidity.
   2. Effective diffuser area is defined as the total perforated membrane area passing air at the specified conditions and excluding nonperforated membrane material.
   3. Oxygen transfer rate (OTR) refers to mass of oxygen per unit time dissolved in a volume of water by an oxygen transfer system operating under given conditions of temperature, barometric pressure, power, gas rate and dissolved oxygen concentration.
   4. Standard oxygen transfer rate (SOTR) refers OTR in clean water when dissolved oxygen (DO) concentration is zero at all points in the water volume, the water temperature is 20 degrees C and barometric pressure is 1 atm (101 kPa).
   5. Oxygen transfer efficiency (OTE) refers to fraction of oxygen in an injected gas stream dissolved under given conditions of temperature, barometric pressure, gas rate and DO concentration.
   6. Standard oxygen transfer efficiency (SOTE) refers to OTE in clean water when the DO concentration is zero at all points in the water volume, the water temperature is 20 degrees C and the barometric pressure is 1 atm (101 kPa).

C. Administrative Requirements:
   1. The Contractor shall assign unit responsibility as specified in Section 43 05 11-1.02 Unit Responsibility to the WWSS System Supplier for provision of all equipment specified in this section.

D. Type: Fine bubble diffusers shall be perforated flexible membrane disc diffusers designed for installation at municipal wastewater facilities. The effective diffuser area of each diffuser will be based on 9 inches in diameter. Tube and panel diffusers shall not be accepted.

E. Design Requirements:
   1. General: Equipment provided under this section shall be designed to supply diffused air to effect the removal of carbonaceous biochemical and nitrogenous oxygen demand from municipal wastewater in an activated sludge-type process. The diffused air equipment shall be suitable for continuous operation in mixed liquor providing sufficient mixing to maintain solids in suspension for each specified operating condition. Mixed liquor may be expected to contain gross waste solids,

organic solids, animal fats, industrial solvents, emulsified oils and greases, and detergents.

2. Reactor Configuration: Fine bubble diffusion equipment shall be installed in the aeration basin tank that contains two distinct aerobic zones. Refer to Drawings for basin configuration. The hydraulic volume and depths of all reactors are as follows:
   a. Aeration Zone 1:
      1) Volume (each) 23,562 gallons
      2) Side Water Depth 20 feet
      3) Diffuser Depth 19 feet
   b. Aeration Zone 2:
      1) Volume (each) 23,562 gallons
      2) Side Water Depth 20 feet
      3) Diffuser Depth 19 feet
   c. The basins are designed with flexibility to operate at a minimum side water depth of 18 feet and volume of 21,206 gallons (each) in aeration zone 1 and aeration zone 2. The operating requirements are based on 20 feet side water depth.
   d. Air rates to each diffuser grid shall be varied independently to maintain the desired mixed liquor dissolved oxygen concentration. The manufacturer is advised that the floors of the reactors and channels are sloped to facilitate draining and cleaning. Clearance between the floor and the equipment necessary to achieve the diffuser elevation specified will vary depending on location within the reactor or channel.
3. Diffusion Equipment Configuration: Diffusers shall be uniformly spaced in each of the reactors and channels. There shall be one piping grid for each drop pipe shown. There shall be on drop pop per aeration zone. Diffusers shall be arranged to allow space for walking and access to the diffusers. Spacing between diffusers on adjacent laterals, between grids, and between each wall and adjacent diffusers shall be maximized to permit access. Spacing between diffusers on adjacent laterals, between grids, and between each basin wall and adjacent diffusers shall be a minimum clear space of 10 inches and a maximum clear space of 48 inches.

F. Operating Requirements and Characteristics:
   1. Diffusion Equipment Operating Requirements: The diffusion equipment shall be designed for the following conditions:

Parameter	Aeration Zone 1	Aeration Zone 2
Location	San Diego, CA	San Diego, CA
Diffuser elevation above mean seal level, ft	125	125
Maximum diffuser air rate at high DO condition average annual SOTR, scfm per diffuser	2.0	2.0
Maximum diffuser air rate at SND condition average annual SOTR, scfm per diffuser	1.25	1.25
Minimum air flux rate, scfm per sq ft of reactor area	0.12	0.12

Parameter	Aeration Zone 1	Aeration Zone 2
Location	San Diego, CA	San Diego, CA
Minimum clean water transfer efficiency[a] (clean water SOTE) at peak air rate (peak scfm per diffuser) and design SWD, percent	36	37
Maximum total pressure at top of drop leg[b], psig	10.8	10.8
Maximum air temperature, degrees F	110	110
Maximum recommended air rate at maximum day SOTR conditions, scfm per diffuser	3.5	3.5

Notes:

a Clean water SOTE as measured in a test tank with similar geometry as the actual tank.
b. Diffuser head loss shall include both the diffuser element and the control orifice. Piping head loss shall include all losses upstream of the control orifice to the top of the drop pipe.

2. Standard Oxygen Requirements: Required standard oxygen transfer rates (SOTRs) for each reactor zone are given below. The diffusion equipment supplier's guaranteed clean water transfer efficiency shall be used for the conversion of SOTRs to airflow (scfm). Clean water transfer efficiency testing shall comply with paragraph 46 51 36-1.2 2.2.

Reactor	High DO Condition			SND Condition		
	Maximum Day SOTR, LB/day	Minimum Day SOTR, LB/day	Average Annual SOTR, LB/day	Maximum Day SOTR, LB/day	Minimum Day SOTR, LB/day	Average Annual SOTR, LB/day
Aeration Zone 1	2,040	1,100	1,750	1,370	720	1,140
Aeration Zone 2	770	380	640	820	420	690

3. Environmental and wastewater characteristics: The environmental and wastewater characteristics are listed below. These conditions do not necessarily occur simultaneously and are provided to give the equipment supplier information regarding the range of expected conditions.

Parameter	Average Annual	Maximum	Minimum
Atmospheric temperature, degrees F	65	107	33
Atmospheric pressure, psia	14.64	--	--
Wastewater temperature, degrees C	26.1	30	22.9
MLSS concentration, mg/L	4,300	6,000	2,500
Wastewater flow rate without RAS, mgd	0.3	0.3	0.3

1.02 REFERENCE SPECIFICATIONS, CODES AND STANDARDS

A. References:

1. This section contains references to the following documents. They are a part of this section as specified and modified. In case of conflict between the requirements of this section and those of the listed documents, the requirements of this section shall prevail.
2. Unless otherwise specified, references to documents shall mean the documents in effect at the time of Advertisement for Bids or Invitation to Bid (or on the effective date of the Agreement if there were no Bids). If referenced documents have been discontinued by the issuing organization, references to those documents shall mean the replacement documents issued or otherwise identified by that organization or, if there are no replacement documents, the last version of the document before it was discontinued. Where document dates are given in the following listing, references to those documents shall mean the specific document version associated with that date, whether or not the document has been superseded by a version with a later date, discontinued or replaced.

Reference	Title
ASTM D1171	Rubber Deterioration Surface Ozone Cracking Outdoors or Chamber (Triangular Specimens)
ASTM D1784	Rigid Poly (Vinyl Chloride) (PVC) Compounds and Chlorinated Poly (Vinyl Chloride) (CPVC) Compounds
ASTM D1785	Poly (Vinyl Chloride) (PVC) Plastic Pipe, Schedules 40, 80, and 120
ASTM D1869	Rubber Rings for Asbestos-Cement Pipe
ASTM D2240	Rubber Property-Durometer Hardness
ASTM D2466	PVC Sewer Pipe and Fittings
ASTM D2564	Solvent Cements for PVC Pipe and Fittings
ASTM D2855	Making Solvent-Cemented Joints with PVC Pipe and Fittings
ASTM D3034	Type PSM Poly (Vinyl Chloride) (PVC) Sewer Pipe and Fittings
ASTM D3915	Poly (Vinyl Chloride) (PVC) and Related Plastic Pipe and Fitting Compounds

B. Tests:
1. Material Testing: Documentation shall be submitted to assure that the stock EPDM material conforms to the requirements of ASTM D3253.
2. Clean Water Test: The fine bubble diffusion equipment shall be subject to clean water testing performed by an independent engineer. The width and length of the test tank shall be such that as to eliminate wall effects and adequately model the performance. The Contractor shall cause the manufacturer to provide results of previous studies performed demonstrating that the test tank results are applicable to the performance of full-size aeration system similar in size to the diffuser aeration system specified herein. A separate set of tests shall be conducted for each aeration zone, with the test diffuser grid spacing mimicking the proposed diffuser density in that zone. The test shall be sufficiently comprehensive to produce guaranteed performance characteristics. The test data shall be employed to produce operating curves having standard oxygen transfer efficiency and standard oxygen transfer rate plotted against airflow rate in scfm. Test logs and operating curves shall be sealed by a registered engineer.

a. Testing shall be performed in accordance with the current ASCE Standard: Measurement of Oxygen Transfer in Clean Water.
b. Tests shall be conducted for each operating condition specified (paragraph 46 51 36-1.1 6.2) in a test tank with a liquid depth of 20 feet. Conditions include:
   1) High DO Condition Maximum Day SOTR Aeration Zone 1
   2) SND Condition Maximum Day SOTR Aeration Zone 2
   3) High DO Condition Annual Average SOTR Aeration Zone 1
   4) High DO Condition Annual Average SOTR Aeration Zone 2
c. Tests shall be conducted for each operating condition specified (paragraph 46 51 36-1.1 6.2) in a test tank with a liquid depth of 18 feet. Conditions include:
   1) High DO Condition Annual Average SOTR Aeration Zone 1
   2) High DO Condition Annual Average SOTR Aeration Zone 2
   3) High DO Condition Minimum Day SOTR Aeration Zone 2
   4) SND Condition Minimum Day SOTR Aeration Zone 1
d. The WWSS shall submit documentation from the proposed independent engineer indicating that the independent engineer has reviewed the contract documents and the manufacturer's proposed equipment and can perform the test for the proposed equipment at the specified operating conditions.
e. All costs for the clean water test shall be borne by the manufacturer. The Contractor shall include the cost for testing at each specified operating condition as part of the bid.
f. The City may require a witnessed test for all specified factory tests. Accordingly, the Contractor shall furnish the Engineer with at least 6 weeks written notification of the time and location of the test.
g. In the event the test results demonstrate that the diffusion equipment does not meet the guaranteed clean water oxygen transfer efficiencies within a tolerance of -5 percent, the WWSS shall cause the manufacturer to modify the system and have it independently tested until the guarantee is met.

3. See Section 01 45 33 for additional inspection requirements.

C. Experience of Manufacturer:
   1. The diffuser system manufacturer shall have prior experience of successful projects in California similar in nature and size as this project. The prior projects shall have used a similar type of membrane diffuser as required for this project. A system is defined as all in-basin piping, diffuser assemblies and supports.
   2. A description of the prior projects shall be included with the shop drawings and shall document the following: Project name and location, client representative and telephone number, final acceptance date, and number and type of diffuser.
   3. Manufacturer shall submit documentation indicating that the membrane manufacturing is in compliance with ISO 9001 standards or shall provide a copy of the product QA/QC program.

1.03 SUBMITTALS

A. The following information shall be submitted in accordance with Section 01 33 00:

1. A copy of this specification section, with addendum updates included, and all referenced and applicable sections, with addendum updates included, with each paragraph check-marked (P) to indicate specification compliance or marked to indicate requested deviations from specification requirements. If deviations from the specifications are indicated and therefore requested by the Contractor, the submittal shall be accompanied by a detailed, written justification for each deviation. Failure to include a copy of the marked-up specification sections, along with justification for any requested deviations to the specification requirements, with the submittal shall be cause for rejection of the entire submittal with no further consideration.
2. Manufacturer's catalog information including diffuser type designation and operating characteristics.
3. List of materials and drawings with dimensions showing aeration piping system. The drawings shall include, at a minimum, distribution headers, access walkway clearances, unobstructed space clearances, locations of the diffusers, pipe supports, expansion joints, water purge system, and locations of pressure monitoring system.
4. Calculations verifying that airflow per diffuser shall not vary greater than ±5 percent from the average airflow per diffuser within a grid during maximum and minimum airflow conditions.
5. Calculations showing normal buoyancy uplift forces and structural calculations to meet the requirements of paragraph 46 51 36-2.3 5.
6. Graphical relationship between clean water transfer efficiency (y-axis) and diffuser airflow rate (x-axis) for each proposed grid over the entire operating range.
7. For each condition (High DO condition maximum day, High DO condition minimum day, High DO condition average annual, SND condition maximum day, SND condition minimum day, SND condition average annual) specified in paragraphs 46 51 36-1.1 6.1 and 6.2 the following information for each reactor and channel shall be tabulated:
   a. Guaranteed clean water transfer efficiency, percent
   b. Airflow per diffuser, per grid and total, scfm
   c. Operating pressure, psig
8. Clean water data and/or the results of simulation modeling used as a basis for the supplier’s guaranteed clean water transfer efficiency.
9. Certified clean water testing results, along with standard test conditions, and description of the testing method used as basis for standard oxygen transfer rate (SOTR).
10. The name of the manufacturer's representatives responsible for installation, the other projects on which they have worked, and their responsibility on these projects.
11. Manufacturer’s installation, testing and adjusting instructions.
12. Documentation from the independent test engineer verifying competence, capacity, and experience to perform the specified clean water test.
13. Operation and maintenance information in accordance with Section 01 78 23.
14. Close out submittals shall be per Section 01 77 00.
15. Anchor bolt calculations and details sealed by a registered engineer in the State of California in accordance with the criteria specified in Section 01 88 15, and

Section 05 05 20 and including the buoyancy requirements specified in paragraph Section 46 51 36-2.3 5.

16. Manufacturer's Installation Certification Form 43 05 11-A specified in Section 01 99 90, Reference Forms.
17. Manufacturer's list of recommended spare parts as specified in paragraph 46 51 36-2.4.
18. Qualifications of proposed factory trained installer to provide full time erection and installation supervision as specified in paragraph 46 51 36-3.1 2.

PART 2 PRODUCTS

2.01 ACCEPTABLE PRODUCTS

A. Fine bubble diffusion equipment shall be manufactured by Sanitaire, Aquarius, EDI, or approved equal.

2.02 MATERIALS

Component	Material
Drop piping from air main connection to base fitting at submerged air manifold,	Stainless steel, ASTM A774 and ASTM A778, Type 316L; Schedule 10S
Submerged air manifold, and headers	Polyvinyl chloride (PVC). Schedule 40 (ASTM D1784 and D1785) for 6-inch and larger, SDR 33.5 or 32.5 (ASTM D3034 and D3915) for 4 inches and smaller
Piping supports and anchors	Stainless steel, AISI 316L for welded components; AISI 316 for nonwelded.
Piping gaskets	Neoprene, 45 to 55 durometer, polyisoprene, ASTM D1869
O-rings	SBR blend natural rubber
Fasteners	Stainless steel, AISI 316
Disk diffuser assembly	
Diffuser membrane	EPDM, ultraviolet light inhibitor, chemical attack, weathering, and aging protection, ASTM D1171
Metallic components	Stainless steel, AISI 316L for welded components; AISI 316 for nonwelded
Pressure monitoring system	
Tubing	Black polyethylene
Carrier pipe	PVC
Junction box	ASTM 308-86 aluminum-alloy 6061-T6 or fiberglass
Portable pressure monitoring panel	ASTM 308-86 aluminum-alloy 6061-T6 or fiberglass
Brackets and hinges	Stainless steel, AISI 316

2.03 EQUIPMENT FEATURES

A. General: The air distribution piping system shall be designed for easy field installation and include provisions for level adjustment, for rotational adjustment of the distribution headers, and for thermal expansion of all piping elements. Unless otherwise specified in this section, plastic piping shall meet the requirements of Section 40 05 01 and sections referenced therein. All welding shall be done in the manufacturer's shop. Field welding will not be permitted.

B. Drop Piping and Connections: Each reactor and channel shall have the number of drop pipes at the locations shown on the Drawings. Each drop pipe shall be supported at its upper connection and along the wall. The pipe shall be stainless steel from the drop pipe connection through to the base fitting the submerged air manifolds are connected. The base fitting shall be anchored per the pipe support system.

C. Submerged Air Manifold:
   1. A submerged air manifold shall be provided for each grid and fabricated in sections up to 20 feet long. The invert elevation of the manifold shall be the same throughout each reactor or channel. Changes in diameter shall be accomplished with eccentric reducers. The end of the manifold shall have a connection to facilitate access inside the manifold.
   2. Connections between sections of the submerged air manifold shall be with floating Van Stone type flanges so that individual manifold sections can be rotated independently of adjacent sections for proper alignment. Expansion joints shall be provided and shall be located adjacent to the supports. Expansion and connection functions can be combined in common elements. Flexible coupled connections shall be provided at the manifold bottom centerline or side for connection to the distribution headers.
   3. Each manifold shall be supported by floor mounted stainless steel anchors and supports spaced as specified in Section 46 51 36-2.03 5.

D. Distribution Headers: Each distribution header shall connect to the bottom centerline or side of the manifold. Headers for flexible membrane diffuser systems shall be fabricated in sections not to exceed 20 feet and shall be joined by threaded unions or other fixed joint method. Bell and spigot joints or other slip-joint type methods are not acceptable. The maximum spacing between distribution headers shall be 4 feet.

E. Piping Support and Anchors:
   1. The support system shall securely anchor the manifold and distribution headers to the reactor and channel floor and be coordinated with the welded steel tank manufacturer per Section 43 40 04. The supports shall be secured to the floor with anchor bolts. Epoxy anchors must be approved by the Engineer. Wedge anchors shall not be permitted. Anchor bolts and support system for grid piping shall be designed for at least 10 times the normal buoyancy uplift forces. Maximum pipe support spacing shall be 7 feet. The pipe support system shall be designed to allow for pipe expansion and contraction over the entire range of specified conditions.
   2. The minimum diameter of any fixing rod type support shall be 1/2 inch and the minimum thickness of steel plate support shall be 10 gage. The minimum diameter of any guide type rod supports shall be 1/2 inch diameter. Each support shall have a bearing surface contoured to fit the pipe being supported. Worm gear clamps

shall not be permitted. All supports shall include a method to provide for vertical and angular alignment adjustment to allow level installation.

3. Supports shall be designed, manufactured and installed in such a manner that the horizontal surfaces of all diffuser elements are within plus or minus 1/4 inch of a common horizontal plane. After the pipe has been installed and leveled, all adjusting mechanisms shall lock in place.

F. Perforated Flexible Membrane Disc Diffuser Assemblies:

1. Single element disc type diffuser holders shall be factory solvent welded to the crown of the distribution lateral, by use of a mechanical saddle, or by use of a grommet for complete air seal and mechanical strength. Mechanical saddle and grommet attachment shall include air inlet port and positive locking mechanism to locate and lock the assembly to the air distributor piping. Mechanical saddle and grommet and associated diffuser body shall be installed in the factory. No field installation of grommet is acceptable.
2. Field solvent welding of diffuser holder to the piping shall not be acceptable. Diffuser assemblies shall be installed along the top centerline of the distribution header. Each assembly shall include a diffuser element, a matching element holder, provisions for securing the element to the assembly, and sealing gaskets.
3. Sealing gaskets, mounted between the holder and the elements, shall prevent air leakage. A flow control device shall be provided to limit air flow in the event of mechanical damage to the diffuser.
4. The membrane holder shall have a back flow prevention mechanism. The back flow preventer shall be designed without moving parts.
5. There shall not be any adverse effect on diffuser membrane performance or characteristics due to exposure to direct sunlight during maintenance of the aeration tank.

G. Alternate Diffuser Holder – Header Attachment:

1. Mechanical Saddle Attachments to Air Distributor: Fabricate distributors with diffuser element by use of a mechanical saddle for complete air seal and mechanical strength. Mechanical Saddle attachment shall include air inlet port and positive locking mechanism to locate and lock the assembly to the air distributor piping. Distributors and holders shall be designed to resist a 600 in-lbs of applied load with no mechanical failure.
2. Threaded Diffuser Holder Attachments to Air Distributor: Provide minimum header thickness of Schedule 80 pipe with weld-o-lets for proper thread engagement and connector strength.

H. Water Purge System: The water purge system shall be located to utilize the aeration air pressure available in the system to remove moisture collected in air distribution piping. At least one purge system shall be located in each grid unit. The purge system shall be located at a lower elevation than the air distribution headers and drain line. Airlift purge eductor is acceptable.

I. Pressure Monitoring System:

1. General: The manufacturer shall provide a pressure monitoring system for measuring the dynamic wet pressure across a diffuser. The monitoring system

shall include pressure taps and tubing leading to a junction box for each aeration grid, and a portable differential pressure monitoring panel.

2. Pressure Taps and Junction Box: Each diffuser grid shall be equipped with pressure taps and tubing leading to a handrail-mounted junction box. Pressure taps shall be located on the diffuser base plate, diffuser header pipe, and a bubble tube pressure sensor. The tubing shall be minimum 3/8 inch-diameter. All tubing shall be routed through a 4 inch PVC carrier pipe below water level and stainless steel carrier pipe above water level to the junction box. The bubble tube pressure sensor shall be mounted on a bracket at an elevation equal to the top of the diffuser.
   a. The junction box shall be field located within 5 feet of each drop leg and have a hinged and gasketed cover with latches. The junction box shall be provided with a stainless mounting stand independent of the handrail. Each junction box shall have three 3/4 inch cam-operated quick disconnect male couplings and isolation ball valves. The couplings shall have permanent labels as follows: “BUBBLE TUBE”, “BASE PLATE”, “PIPE”.
3. Portable Pressure Monitoring Panel: The pressure monitoring panel shall be designed to measure the differential pressure between the bubble tube and the diffuser base plate, and differential pressure between the diffuser header pipe and the diffuser base plate. The panel shall be enclosed in a cabinet and have a hinged cover. The panel shall be equipped with wheels or a carrying handle for transporting to the various junction boxes.
   a. The panel shall be equipped with three 3/4 inch cam-operated male quick disconnect couplings labeled to match the junction box couplings. Four 5 foot-long connecting hoses, with female quick disconnect couplings on each end, shall be provided for connecting the panel with the junction box.
   b. The differential pressure measurement gage shall have a 0 to 40 inch water column range, accuracy of plus or minus 2 percent of full scale, rated total pressure of 15 psig, die-cast aluminum case, zero adjustment accessible with removing the cover, overpressure protection, o-ring seals and impact resistant clear plastic face. Differential pressure gage shall be Dwyer Series 2000 Magnehelic, or approved equal. A rotameter having a 0 to 5 scfm range and integral needle valve shall be provided on the bubble line connection. The panel shall be equipped with clearly labeled isolation and equalization valves. Instructions with schematics for making the pressure measurements shall be fixed to the inside of the panel cover.

2.04 SPARE PARTS

A. The manufacturer shall furnish all special tools and equipment required for maintenance and installation. For the purposes of this section, “special tools and equipment” are defined as any tools or equipment (hand tools, jigs, fixtures, etc.) not commonly available from sources other than the manufacturer.
   1. The manufacturer shall furnish a list of recommended spare parts to the City.
   2. Additionally, the manufacturer shall furnish and identify separately in the bill of materials a nominal quantity of spare parts for the Contractor's use to cover loss, breakage, and replacement.
   3. See Section 01 78 23 for additional requirements for spare parts.

PART 3 EXECUTION

3.01 INSTALLATION

A. The Contractor shall install the number of diffuser elements required to meet the specified operating conditions. The perforated flexible membrane disc diffusers shall be installed such that the top at each diffuser is at the elevation specified. As required, the support system shall be adjusted to account for a sloping floor to keep the top of the diffusers at the same elevation. All unused diffuser holders and taps shall be plugged. All separate elements and plugs shall be stored and protected in accordance with Section 01 61 00.

B. Equipment provided under this section shall be installed in conformance with the manufacturer's instructions. Erection, installation and testing shall be done under the full time direct supervision of a factory trained installer with verifiable experience.

C. After the requirements of paragraph 46 51 36-3.3 have been fulfilled, unless otherwise directed by the City, the reactors and channels shall remain filled with High Pressure Effluent (HPE) water to protect the installed diffuser system.

3.02 APPLICATION

A. Special Techniques: At a minimum, installation techniques shall conform to ASTM D2564 and ASTM D2855.

B. Tolerances: Tolerances for equipment installation shall be as follows:

Equipment	Tolerances
Invert of distribution header within each zone	±0.25 inch
Diffuser elevations within the same reactor or channel	±0.25 inch

3.03 FIELD QUALITY CONTROL

A. General: The fine bubble diffusion equipment shall be subject to the following tests for leveling, leakage, distribution of flow, and operating pressure. All tests shall be observed and confirmed by the manufacturer's representative and Engineer. All testing costs shall be borne by the Contractor. The Contractor shall take special precautions to ensure that diffusers are not subjected to fouling, clogging, drying, or UV degradation from the start of the testing period until process startup has completed.

B. Leveling Tests: Potable water shall be introduced into each reactor and channel to the top of the diffuser elements. The level of the diffusers shall then be checked to document that all element horizontal surfaces are within 0.25 inch of a common horizontal plane at the elevation.

C. Leakage and Airflow Distribution Tests: After successful completion of leveling tests, the water level shall be raised to 2 inches above the diffusers. Air shall then be introduced into the system. The water surface shall be visually inspected to ensure that the airflow is uniformly distributed. Any leaks in the element holders, elements, pipes, or the like shall be repaired by the Contractor. The test shall be repeated at low

level and at full operational depth until the City and the manufacturer witness that the installation is void of air leaks.

D. Operating Pressure Tests: The Contractor shall place each reactor and channel in operation with potable water to the average design operating depth specified. Blower airflows shall be set for the flow rates as specified. The pressure shall be tested in each drop leg and recorded. The maximum pressure at the top of the drop pipe shall be as specified in the project manual. Pressure sensing devices and taps shall be provided by the equipment manufacturer.

E. Failure to Demonstrate Acceptable Operation: If the field tests fail to demonstrate that the diffusion equipment distributes airflow uniformly and meets maximum operating pressure requirements as specified, additional equipment shall be provided, or modifications made to remedy the deficiency. The equipment shall be completely retested after addition or modification. All structural, piping, equipment, electrical, and other modifications necessary to accommodate additions or modifications shall be made at no additional cost to the City.

END OF SECTION

SECTION 46 61 33

MEMBRANE BIOREACTOR SYSTEM

PART 1 – GENERAL

1.01 GENERAL REQUIREMENTS

A. This Specification details the minimum requirements for the design, supply, supervision of installation, commissioning, testing and performance requirements of a membrane filtration system for the Membrane Bioreactor (MBR) process. This system is referred to hereinafter as the MBR Membrane System. The MBR Membrane System shall be one of the three systems identified below. The MBR Membrane System shall be integrated into the BNR system supplied by the WWSS as defined in Section 46 41 40. The WWSS is responsible to furnish and install a complete and operable system.

B. The design of the MBR Membrane System as contained herein is specifically and uniquely tailored for the following equipment and systems:
   1. LEAP MBR System, Suez Water Technologies & Solutions
   2. PULSION MBR System, Koch Separation Solutions
   3. MemPulse MBR System, Dupont
   4. Or approved equal

C. The total required filtrate shall be produced by the MBR Membrane Systems. The System shall be the product of a single and unique manufacturer listed above. Membrane filtered water will be conveyed to the MBR Filtration Tanks. The MBR Filtration Tanks will be provided by the Contractor.

D. The following table describes the flow rates of the MBR Membrane System:

Stream	Flow Rate (gpm)
Total Net Filtrate[1]	201
Total Influent to Bioreactor Tanks[2]	208
Average WAS Flow Rate[3]	7
Maximum ML Flow to Membrane Tanks	747

1. Total net flow that the MBR process will produce on a continuous average basis. This accounts for relaxation/backwash but not the losses for maintenance and recovery cleans.
2. This is the total influent wastewater flow to the biological treatment process from the fine screens.
3. Maximum losses to waste activated sludge (WAS) are 7gpm (2.8% of influent).

E. The WWSS shall be deemed to have used its judgement as an expert in the field and shall include any associated items not mentioned specifically within this specification which are necessary to provide a membrane system that is complete and meets the Performance Requirements.

F. The MBR Membrane Systems shall be submerged membrane filtration system and shall be installed in its own MBR Membrane Tank furnished by the WWSS. The membrane filtration system shall have a physical footprint and general arrangement of equipment as shown in the project drawings. Any modifications to the general arrangement of the equipment must be approved by the Engineer.

G. The MBR Membrane System shall be supplied with all equipment necessary to conduct a Pressure Decay Test on the membranes using maximum air pressure tolerable by the membranes, as deemed suitable by the manufacturer. The MBR Membrane System provided without the necessary equipment to conduct the Pressure Decay Test shall be rejected.

H. Feed wastewater fed to the membrane filtration system will be screened using a 2-mm perforated self-backwash strainer as specified in the Contract Documents. The Strainers will be provided by the Contractor. Additional screening will not be provided for the blended wastewater before being fed to the bioreactors basins and subsequently to the membrane filtration system.

I. All equipment shall be painted a color approved by the Engineer. The required color will be provided to the MBRSS after award of contract.

1.02 STANDARDS AND SPECIFICATIONS

A. The requirements of this Specification take precedence over design information provided by the WWSS during development of plans and specifications.

B. All mechanical equipment provided by the WWSS shall be subject to the requirements of Division 43 and 46.

C. Instrumentation and controls work included as part of the WWSS provided equipment shall be as specified in Division 40.

D. Electrical work included as part of the WWSS provided equipment shall be as specified in Division 26.

E. The work shall conform to all relevant Project Standards and all relevant U.S. Codes and Standards except where specifically noted on the Drawings.

F. Equipment shall be of robust construction, industrial grade, and fabricated from corrosion resistant materials suitable for its operating environment. Equipment shall be suitable for application in outdoor wastewater treatment and in wet environments suitable for use in the activated sludge process.

G. Equipment shall be of a standard and proven design for which spare parts are readily available within the U.S.A.

1.03 ENGINEERING DESIGN

A. The WWSS shall provide all design and engineering necessary to provide the membrane system for MBR process and to facilitate integration of these systems into the overall treatment plant.

1.04 SUBMITTALS

A. WWSS design outputs such as drawings and schedules shall comply with project standards and formats where given.

B. Engineering submittals include the following:

1. A notarized certificate of unit responsibility shall be provided by the WWSS. A single manufacturer shall produce the principal components of the specified MBR Systems. No proposals will be considered from separate sales, distribution, or supply companies.
2. P&IDs showing all WWSS supplied equipment including clear indication of tie in points. Review of overall project P&ID's to confirm compatibility with the membrane systems
3. Incorporation of project specific equipment numbering systems into the design.
4. General Arrangement (GA) and piping drawings showing all WWSS supplied equipment including clear description of tie in points. These include drawings of individual skids and tanks as well as the overall arrangements of the skids and associated plant. Review of overall project piping and arrangement drawings to confirm suitability. Data and specifications for the equipment shall include as a minimum:
   a. Descriptive literature, brochures, catalogues, cut sheets and other detailed descriptive material of the equipment showing the weight, base dimensions, and anchorage requirements including anchor bolt size and location.
   b. MBR system layout
   c. Structural calculations demonstrating compliance with the requirements herein including calculations for supports, where required, for seismic analysis and/or equipment design.
   d. Complete certified equipment drawings, including location of all piping, electrical instrumentation, supports, and structural, dimensioned connections
   e. Details of pads, loadings, hold down bolting, and other relevant details.
   f. Process design report including flow/ load/ flux calculations, mass/flow balance, and other process related calculations.
5. Equipment schedules, data sheets and catalogue cuts in WWSS format including:
   a. Pumps
   b. Blowers
   c. MBR membrane elements

d. Valves
e. Field Instruments
f. Motors

C. General equipment
1. Specification of flows and pressures required at each termination point
2. Specification of utility requirements
3. Detailed written Control Philosophy for the membrane systems
4. Control panel interior and exterior layouts, bill of materials and catalogue cuts for each panel.
5. Control panel wiring and interconnection diagrams
6. As-built shop drawings

D. Electric motor data, voltage, electrical characteristics, and nameplate data in accordance with Division 26.

E. Instrumentation and related ancillary components per the Division 40 specifications submittal requirements.

F. Controls hardware, software and OIT screen development submittals per the Division 40 specification requirements.

G. Catalog data of all ancillary electrical components. Include wiring, control schematics, termination drawings and interconnection diagrams for all devices and panels provided with the equipment.

H. Equipment certifications, tools, written field procedures and full calibration with default figures shall be provided.

I. Installation Manual containing instructions to be followed in the installation of the equipment. The manual, as a minimum, shall contain the following information:
1. Installation drawings. Drawings shall show the location and configuration of the pumping skid equipment in conjunction with adjoining equipment, tanks, panels, interconnecting piping, platforms, grating and containment curbs.
2. Location and orientation of piping interconnections.
3. Major parts list including weights of component parts.
4. Procedures to be followed in unpacking and unloading, including directions indicating proper methods for moving the equipment including equipment weights and lifting points.
5. Instructions for alignment, levelling, and all pertinent information for the proper installation of the equipment.
6. Instruction for anchoring and securing the equipment (including anchor bolt size and anchoring location)
7. Wiring instructions for alignment and connection of the equipment.

8. Instructions for grounding motors.
9. Instruction for the connection of power cabling and lubrication lines.
10. Site storage, handling, and protection requirements prior to installation.
11. Describe any exceptions or deviations taken to the Contract Documents

J. Comprehensive project specific Operation and Maintenance (O&M) manuals. Complete O&M manuals shall be provided prior to system handover and in both hard copy and electronic formats. These shall incorporate the following requested features as a minimum:
   1. Emphasis shall be placed on Maintenance schedules and information.
   2. Plant and area Operating principles and operating procedures shall be printed and provided in a hardcopy format as well as on the DVD/CD.
   3. As-Constructed Drawings shall also be included in the electronic O&M Manual.
   4. Spare parts details (including critical and non-critical spares)
   5. Hydraulic review of interconnecting pipe work design to endure it's suitability and compatibility

K. Shop Drawings information package shall consider seismic requirements. Provide structure calculations to support where required.

1.05 ABBREVIATIONS AND DEFINITIONS

A. The following abbreviations/definitions will be used in the specifications:

WWSS – Membrane System Supplier

MBR – Membrane Bioreactor

DDW – Division of Drinking Water, California State Water Resources Control Board

ELAP – Environmental Laboratory Accreditation Program

FAT – Factory Acceptance Testing

RIO – Remote Input Output

CEB – Chemical Enhanced Backwash

CIP – Clean In Place

MCC – Motor Control Center

PLCS – Programmable Logic Controller System

PD – Positive Displacement

VFD – Variable Frequency Drive

MLSS – Mixed Liquor Suspended Solids

DCS – Distributed Control System

RAS – Return Activated Sludge

MFSS – Membrane Filter System Supplier

VCP –Vendor Control Panel

LCS – Local Control Station

OIT – Operational Interface Terminal

PART 2 – PRODUCTS

2.01 GENERAL

A. The scope of work for the WWSS includes the design, supply, supervision of installation, testing, commissioning, and performance of one MBR Membrane System for an overall MBR process. The membrane system shall produce high quality water in accordance with the specification.

2.02 SCOPE BY WWSS

A. The WWSS Scope of Work is described below. The Scope is supplemented by the Contract Drawings. The Scope description in this specification takes precedence over any discrepancies between the specification and drawings.

B. The MBR Membrane System shall be provided as a complete automatic package system including all equipment, systems and control required to accept and filter biologically treated wastewater to produce ultrafiltered water. The Contractor is ultimately responsible to furnish and install a complete and operable system.

C. WWSS Equipment scope for the MBR Membrane System is summarized in the following table. The table shows major equipment only. Additional equipment not included in the table but required for the overall functioning of the MBR Membrane System are still part of the scope of supply of the WWSS, including the following:

1. Piping and valving as required for a functional system, along with pressure gauges and sensor switches as shown in the Contract Drawings.
2. All pipe, cable and equipment support for the skid mounted equipment and for interconnecting pipework that is in the WWSS's supply and installation scope.
3. All necessary pressure regulating valves, filters and lubricators. These shall be incorporated on the relevant WWSS supplied skids.
4. All required painting and protective coating to a standard that is suitable for the duty. Coatings shall be as specified in Division 09.
5. Pipe and equipment labelling and safety signs in accordance with the numbering system used in the included drawings.
6. Packing, marking and delivery.
7. All integral ancillary equipment required for safe operation in the intended service.

		WWSS Scope	
Equipment	**Type**	**Duty**	**Shelf Spare**
GENERAL			
PLC-based VCP with Dedicated OIT		1	0
FILTRATE PUMP SKID			
Filtrate / Backwash Pump	Rotary Lobe	1	0
Flow Meter		1	0
Pressure Transmitter		1	0
Turbidity Meter		1	0
Pressure Gauges		1	0
RAS PUMP SKID			
RAS Pump	Centrifugal	1	0
Discharge Flow Switch		1	0
Pressure Gauges		1	0
MBR SYSTEM SKID			
Membrane Tank	Steel	1	0
Membrane Modules/Cassettes		1	0
Pressure Transmitter		1	0
Level Transmitter		1	0
Air Solenoid Valves		1	0
Pneumatic Scour Air Valve		1	0
BLOWER SKID			
Membrane Scour Air Blower	PD	1	0
Silencers		1	0
Air Filter		1	0
Pressure Transmitter		1	0
Low Pressure Switch		1	0
High Pressure Switch		1	0
High Temperature Switch		1	0

		WWSS Scope	
Equipment	**Type**	**Duty**	**Shelf Spare**
Safety Pressure Relief Valve		1	0

D. Design parameters for each pump and blower are shown in the following table, including maximum values for pump power. These parameters may be modified by the WWSS, and proposed modifications shall be submitted to the Engineer for approval.

Pump Name	**Design Flow**	**Design Pressure (psi)**	**Power (HP)**
Filtrate / Backwash Pump – Filtrate	201 gpm	11.5	10
RAS Pump	832 gpm	8.5	7.5
Membrane Scour Air Blower	Per MBR System Supplier	4.4	15
CASSF Air Compressor	38 scfm	140	10

2.03 FILTRATE PUMP SKID

A. The WWSS shall supply one skid-mounted Filtrate/Backwash Pump. This pump shall be capable of drawing filtrate through the MBR membranes in the forward direction under a minimum 8 psi trans-membrane pressure. This pump shall also be capable of providing backwash flow in the reverse direction, with a flow rate and pressure selected by the WWSS, based on membrane system requirements.

B. Pump and motor requirements are as listed below. Refer to the requirements of Section 43 23 03 – GENERAL REQUIREMENTS FOR CENTRIFUGAL PUMPS.

1. Pump shall be a reversible, positive-displacement rotary lobe pump.
2. Motor shall be 480 volt, 3 phase, and shall be controlled by VFDs.
3. Pump shall operate at a minimum of 55% wire-to-water efficiency.
4. Pump shell, wear plates, and inlet/outlet flanges shall be Type 316 Stainless Steel. Rotor or lobe tips shall be provided with an EPDM or Buna-bonded covering.
5. Manufacturer's standard mechanical coupling with coupling guard shall be used.
6. Pump VFD shall be provided by the Contractor and housed within the electrical room trailer MCC.

C. Filtrate/Backwash Pump installation shall include mounting to Pump Skid, all internal skid piping and valving, all internal skid cabling, electrical and control wiring to local termination boxes, bolts, gaskets and ancillary appurtenances.

D. Referring to the P&ID drawings, instruments on the Pump Skid shall include at a minimum:
   1. On-line filtered water flowmeter installed on the skid.
   2. Pressure gauges on either side of the pump
   3. Pressure indicating transmitter for filtrate and backwash pressure monitoring
   4. Turbidity meter wet panel connected on the discharge line of the filtrate pump (refer to P&ID wet panel installation details). Instruments shall be provided by the WWSS and meet requirements of Specification 40 91 12 – PROCESS ANALYZER MEASURING SYSTEM.

E. Chemical injection points for the sodium hypochlorite and citric acid injection lines will be installed outside the limits of the skid.

F. Backwash and membrane cleaning water shall be drawn from MBR Filtrate Tank No 1.

2.04 RAS PUMP SKID

A. The WWSS shall supply one skid-mounted RAS Pump. This pump shall be capable of drawing RAS from the bioreactor tanks for discharge into the associated membrane basin, with a total dynamic head of 8.5 psi.
   1. Pump and motor requirements are as listed below. Refer to the requirements of Section 43 20 00 – Pumps, General.
   2. Pump shall be centrifugal.
   3. Motors shall be 480 volt, 3 phase, and shall be controlled by VFDs.
   4. Pump shall operate at a minimum of 75% wire-to-water efficiency.
   5. Pump shell, wear plates, and inlet/outlet flanges shall be Type 316 Stainless Steel. Material selection shall be suitable for RAS service.
   6. Manufacturer's standard mechanical coupling with coupling guard shall be used.
   7. Pump VFD shall be provided by the Contractor and housed within the electrical room trailer MCC

B. RAS Pump installation shall include mounting to Pump Skid, all internal skid piping and valving, all internal skid cabling, electrical and control wiring to local termination boxes, bolts, gaskets and ancillary appurtenances.

C. Referring to the P&ID drawings, instruments on the Pump Skid shall include:
   1. On-line RAS flowmeter (shipped loose for Contractor installation)
   2. Pressure gauges on either side of the pump
   3. Discharge thermal flow switch

2.05 CASSF AIR COMPRESSOR

A. The CASSF Air Compressor will provide compressed air to the entire CASSF site in addition to the air demand required for the MBR Membrane System. Required capacity of the Air Compressor is shown in the table above.

B. Air provided shall be Clean and Dry Plant Air per ISO 8573.1.

C. The Air Compressor shall be a skid-mounted unit.
   1. Pump and motor requirements are as listed above.
   2. Air Compressor shall be a rotary screw compressor.
   3. Air Compressor will come with integral air receiver with minimum size of 200 liters.
   4. Motors shall be 480 volt, 3 phase, and shall be controlled by VFDs.
   5. Pump VFD shall be provided by the Contractor and housed within the electrical room trailer MCC

D. Referring to the P&ID drawings, instruments on the skid, including:
   1. Pressure gauges on discharge side of the pump

2.06 MEMBRANE TANK AND MEMBRANE MODULES

A. The WWSS shall furnish a Membrane Tank for the submerged MBR membrane elements. Tank requirements are as listed below. Refer to the requirements of Divisions 05 and 09, and 46.
   1. The size of the Membrane Tank shall be designed to accommodate the WWSS's standard MBR membrane elements.
   2. Membrane Tank shall be a welded steel tank.
   3. Membrane Tank shall fit in the footprint shown on the design drawings. The WWSS shall rearrange the membrane modules, if necessary, such that the membrane tank does not take more footprint than allocated on the design drawings.
   4. The Membrane Tank shall be an epoxy-lined in accordance with the requirements of Section 09 99 00 – PROTECTIVE COATING. Flange nuts and bolts shall be galvanized steel. Submerged, wetted, or internal items shall be stainless steel.

B. The Membrane Tank shall be anchored to a housekeeping pad as shown in the Contract Drawings. The WWSS shall submit structural calculations for the tank and anchors sealed by a registered Professional Engineer in the state of California.

C. The membrane system shall be designed for a gross flux rate of 14 gfd and minimum product recovery of 90% after accounting for backwash and/or relaxation losses. The project team intends to evaluate the performance of the membrane system at a flux of 18 gfd in the future by isolating certain membrane modules.

	Units	Suez	DuPont	Koch
Name of the Module		ZW500D	B40N	LE44
Number of Modules in Pilot		48	48	44
Membrane Surface Area per Module	ft^2	430	430	468
Minimum Membrane Surface Area Provided	ft^2	20,640	20,667	20,602
Average Instantaneous Design Flux	gfd	14	14	14
Average Instantaneous Design Flow	gpm	201	201	200
Membrane System Recovery	%	94	94	94
Average Net Design Flow	gpm	189	189	188
WAS Losses	%	2.8%		
Bioreactor Average Influent Flow	gpm	206		

D. The qualified membrane products include Suez's LEAP ZeeWeed 500D, Koch's Puron Pulsion LE16, Dupont's MEMCOR B40N, or approved equal.

E. The Membrane Tank shall be furnished complete with all interconnecting piping; membrane air distribution and solenoid and pneumatic isolation valves for control of membrane air; filtrate collection; influent and RAS return connection; air vents; drain lines; and all other appurtenances to provide a fully functional membrane filtration system.

F. Instruments in the Membrane Tank shall include:
   1. Pressure indicating transmitter for trans-membrane pressure.
   2. Hydrostatic-type level indicating transmitter for water level in the Membrane Tank.
   3. Pipeline installed vibronic level switch (for vacuum assist filtrate detection), if required.

2.07 BLOWER SKID

A. The WWSS shall supply one skid-mounted Membrane Scour Air Blower. This blower shall be capable of providing air for membrane scour. The blower air flow rate shall be selected by the WWSS based on the requirements of their system.

B. Blower and motor requirements are as listed below. Refer to the requirements of Division 43.
   1. Blower shall be the positive-displacement rotary lobe type.
   2. Motor shall be 480 volt, 3 phase, and shall be controlled by VFD.
   3. Blower shall operate at a minimum of 55% overall efficiency (including blower efficiency and motor efficiency, equivalent to "wire-to-water").
   4. Blower case, impellers, and headplates shall be cast iron. The blower shall be provided with a NEMA 4X aluminium noise enclosure.
   5. Manufacturer's standard mechanical couplings shall be used.

6. Motor VFD shall be provided by the Contractor and housed within the electrical room trailer.

C. Membrane Scour Air Blower installation shall include all internal skid piping and valving, and all internal skid cabling, electrical and control wiring, as required for a complete and functional system. Skid appurtenances shall include the following, as shown on the Contract Drawings:
   1. Intake air filter.
   2. Inlet silencer and discharge silencer.
   3. Air vent.
   4. Discharge check valve and flexible coupling.

D. Instruments on the Blower Skid shall include:
   1. Air intake low pressure switch
   2. Discharge safety pressure relief valve
   3. Discharge high pressure switch
   4. Discharge high temperature switch
   5. Discharge pressure indicating transmitter.

2.08 ELECTRICAL

A. The electrical components of the WWSS shall be designed for outdoor installations. Electrical enclosures shall be rated according to the requirements in Division 40. Power cables and signal conductors, along with fieldbus communication cables shall be as indicated in Division 26 and Division 40 respectively.

B. Each WWSS skid shall be factory-wired by the WWSS with power conductors and signal/control conductors terminated within a power distribution terminal box and signal terminal box, respectively. Each junction terminal box shall be provided with an internal backplane to support identified terminal strips and wireway systems. The boxes shall be fabricated, assembled, labelled and mounted on the skid structural frame in accordance with the requirements of Division 26 and shall serve as the plant control system interface point for skid power and control/signaling.

C. Electric motors shall be TEFC and in accordance with Division 26

D. VFD Motor Controllers and line reactors shall be furnished in accordance with Division 26.

E. All miscellaneous electrical components – including power supplies, control relays, breakers, timers, control power transformers, fuse blocks, fuses, terminal blocks, disconnect switches, etc. – shall be subject to the supply and installation requirements of the Division 26 and 40 specifications.

2.09 INSTRUMENTATION AND CONTROL

A. General
1. The MBR System shall be furnished as a separate package system by a WWSS. The package system shall consist of mechanical, instrumentation, electrical and control components.
2. All WWSS furnished control panels shall be Nema 4X, 316 stainless steel, designed to be located in a covered outdoor wash-down area.
3. Electrical components and assemblies shall be UL labelled. All electrical work shall conform to the requirements specified herein and further detailed in the Division 26 specifications.
4. Instrument procurement and installation shall be subject to the requirements of the Division 40 drawings, specifications, instrument schedule and I/O schedule.
5. The WWSS shall refer to the P&ID panel drawings, Division 26 general requirements and specifications for control panel specifications and requirements.
6. The WWSS shall refer to specification division 40 for overall system control philosophy and operator interface control screen development requirements.

2.10 SPARE PARTS

A. Critical spare parts and complete shelf standby units required shall be provided for the elements of the system most likely to require replacement over the first two years.

B. This shall as a minimum include:
1. One pressure transmitter of each type
2. One flowmeter of each type
3. One air solenoid valve
4. One air filter
5. One spare pre-programmed PLC processor

2.11 COORDINATION AND SCOPE BY CONTRACTOR

A. The Contractor shall provide civil, mechanical, and building works including:
1. Concrete floor, slab, foundations and plinths to support each WWSS piece of equipment.
2. Drainage system to accommodate tank drains and overflows.
3. Placing and fixing/grouting of WWSS-furnished skids and tanks.
4. MBR System RAS Pump skid interconnect piping and valves to the MBR Membrane Basin. (Connection bolts and gaskets by WWSS.)
5. Piping from the MBR Membrane Tank filtrate header to the associated Filtrate / Backwash Pump skid suction header. (Connection bolts and gaskets by WWSS.)
6. Piping and valves from the Filtrate Pump discharge to the RO Feed Tank inlet. Connection bolts and gaskets by WWSS.

7. Piping to filtrate turbidity wetpanel from filtrate line.
8. Membrane skid drain valve by WWSS. (Connection bolts and gaskets by WWSS.)
9. Sample drain from turbidity instrumentation
10. Filtrate Line Drain.
11. Drainage collection systems to accommodate overflows and drains from the MF Feed Tank and the Backwash Tank.
12. Air piping from the Blower Skid to the MBR Membrane Tank. Connection hardware by Contractor.
13. VFD units at MCC. Contractor proposed units shall be reviewed and approved by WWSS.
14. Power, signal, and control wiring to the WWSS skid termination cabinet; fibre optic cabling to the System VCP.

B. Supply and Installation: The membrane system shall be supplied/installed as follows:
1. Component skids shall be supplied fully assembled by each WWSS. These shall be placed and bolted/grouted into position by Contractor.
2. Blower units supplied pre-assembled and pre-tested, for placing and fixing by the Contractor
3. Valves/ field instruments supplied loose for installation into piping supplied and installed by the Contractor.
4. Any required post field assembly skid wiring shall be detailed in the WWSS installation manual submittal for Contractor execution.

PART 3 – EXECUTION

3.01 INSPECTION, COMMISSIONING, TESTING AND OPERATIONS SUPPORT

A. Inspection and Testing during Fabrication
1. The WWSS shall provide and follow an Inspection Testing Plan (ITP) covering the design, fabrication and delivery of the skids, including suggested hold and inspection points for verification.

B. Factory Acceptance Testing (FAT)
1. Prior to delivery on-site, the WWSS shall perform comprehensive Factory Acceptance Tests of all systems.
2. Factory Mechanical Equipment and Membrane Testing (Un-witnessed): The system equipment shall be factory assembled and factory tested at the point of manufacture. The Engineer reserves the right to be present during the factory testing. The Engineer and the Contractor shall be notified at least six weeks prior to the estimated test date. WWSS endorsed certificate of successful test, with the results of all conducted tests attached, shall be submitted to the Engineer for review and approval.
3. FAT shall include inspection of:

a. Pump Skids and Blower Skids – including review of skid arrangement, instrument installation and piping

b. System Pressure and Leak Testing – including Membrane Basin.

c. Inspection of membranes and other equipment scheduled to be shipped loose.

d. Factory System Controls Testing (Witnessed): The system PLC-based control panels, pumps skids, blower skids, control valves and any other MANUFACTURER furnished field control panels (including analyser wetpanels) shall be factory assembled and factory tested at the point of manufacture. The test shall be overseen by the Engineer. The Engineer and the Contractor shall be notified at least four weeks prior to the estimated test date. Control system factory testing requirements shall be as detailed in Section 40 95 10 – PLC-based Control Systems Hardware.

e. The Contractor shall coordinate shipment of the MBR System VFD units to the WWSS factory for configuration and for use during both factory tests. Shipment shall be made at least 4 weeks prior to the scheduled mechanical factory test.

f. The FAT will include actual operation of the equipment skids to fully reflect field conditions possible within the factory limits. Testing will include use of a nodal control framework to confirm system operation.

g. Upon successful completion of the two factory tests, the WWSS shall be responsible for shipping the configured drives and starters, along with the WWSS skids, to the site for Contractor field installation.

C. STARTUP AND COMMISSIONING

1. Each WWSS shall furnish the services of a qualified technician who shall be on site for required startup and commissioning services. Required services will be as recommended by MBR System Supplier and Specification 01 91 14 – TESTING AND STARTUP.

3.02 PERFORMANCE REQUIREMENTS

A. The WWSS shall guarantee the performance of the membrane system as complete integrated process plant. Process/Performance guarantees are required as follows:

1. Membrane Filtered Water Quality

a. Membrane Filtered Water quality is measured at the membrane system filtrate water outlet, upstream of the membrane filtrate tank. Membrane quality measurements are to confirm the system is suitably protecting the downstream treatment processes as well as satisfying the DDW's Title 22 water recycling criteria. The turbidity of membrane filtered water should not exceed 0.2 NTU for more than 5 percent of the time within a 24-hour period; and should not exceed 0.5 NTU at any time.

2. Specific quality parameters are listed as follows:

Parameter	95th Percentile	Max	Monitoring
Filterability-Related Parameters			
SDI	N/A	3	Grab sample
Turbidity	0.2 NTU	0.5 NTU	Online monitoring
Microbial Parameters			
Fecal coliforms (with E. Coli as indicator)	<2 MPN/100 mL	N/A	Grab sample

3. Percentile compliance is measured in terms of percentage of 24-hour time based composite samples that meet the criteria. Microbial parameters shall be tested based on grab samples. Percentile compliance for turbidity shall be based on real-time online measurement.
4. Filtered Water Production Rate
   a. The MBR Membrane System shall be capable of continuously producing a net filtrate flow of 201 gpm each. The net flowrate is the gross flowrate minus losses due to backwash or relaxation.
5. The maintenance cleans shall be limited to once a week.
6. The recovery cleans shall be limited to once every three months.
7. Membrane Gross Flux
   a. The membrane system shall be sized for an instantaneous gross flux rate of 14 gfd to achieve the filtered water production rate specified.
8. Membrane Life
   a. Membrane Life Guarantee details are as follows.
   b. Membrane Module Warranty: (7 Year - 2 Year Absolute and 5 Years Pro-Rated)
   c. For a period of 84 months commencing from the date of the start-up, or 90 months from the time of membrane site installation by the WWSS (the "Warranty Period"), whichever is sooner, WWSS warrants that the membrane modules, when properly maintained, and operated at ratings, specifications, and design conditions, shall be free from defects in material and workmanship. In addition, WWSS warrants satisfactory performance of each membrane module based on the ultrafiltration system's ability to support design flow rates and the membrane modules' ability to produce filtrate of acceptable quality as specified.
   d. If the membrane system does not meet the filtrate turbidity requirements, then the membrane system supplier shall provide, at no cost to the owner, remedial measures such that the filtrate turbidity is restored per specification. The cost for such repair including equipment, labor, and associated project team's labor due to test schedule delay shall be paid by the membrane system supplier.

e. Owner and WWSS shall work together to optimize the specific operating protocol to be used including but not limited to membrane flux and cleaning set points with the goal of achieving excellent long-term performance. Any change in operating conditions, water chemistry or the nature of the contaminants shall require a review to determine the potential for impact on this warranty.

9. Feed Water Quality
   a. The membrane system shall receive biologically treated wastewater from the biological treatment basins as part of the MBR process.
   b. This biological treatment process will be operated in different modes as part of the Demonstration Study. The MLSS concentration of mixed liquor going to the MBR Membrane System shall range from 3,000 to 10,000 mg/L. The wastewater will be fully nitrified, with ammonia concentrations ranging from 0 to 0.5 mg/L as N. The level of denitrification will vary, with nitrate levels ranging from 2 to 50 mg/L as N. The MBR process is designed to operate at a minimum total SRT of 10 days.

3.03 WWSS GUARANTEED DESIGN INFORMATION

A. The WWSS shall guarantee the following design information used in designing Balance of Plant systems as shown in project drawings:
   1. Maintenance cleans shall be limited to maximum of once per week and should be no longer than 120 minutes.
   2. Maximum volume of sodium hypochlorite (6.5% solution) consumed during maintenance clean – 8 gallons
   3. Maximum volume of citric acid (50% solution) consumed during maintenance clean – 6 gallons

3.04 EQUIPMENT USED

A. Instruments and equipment provided by WWSS, including but not limited to valves, piping, actuators, and measuring devices shall be per Divisions 40 and Division 43.

END OF SECTION

THIS PAGE INTENTIONALLY LEFT BLANK

SECTION 46 61 36
MEMBRANE FILTRATION

PART 1—GENERAL

1.01 BACKGROUND

A. As part of the treatment process flow for the Central Area Small-Scale Facility, the membrane filtration system (MFS) shall receive filtrate from the biological activated carbon (BAC) system. The BAC Filtrate Tank will provide flow equalization between the BAC system and MFS. There will be a chloramine residual present in the MFS feed.
   1. The MFS must be capable of treating influent with the following water quality characteristics:

Parameter	Units	Design Value	Target Range
Turbidity	NTU	0.1	0.02–0.2
Total Suspended Solids	mg/L	ND	<1
Chloramines	mg/L as Cl_2	2	1–3
pH	Standard	6.8	6.6–7.0
Iron	µg/L	30	20–50
Manganese	µg/L	2	1–30
Total Organic Carbon	mg/L	4	3.5–6.0

1.02 REFERENCES

A. Abbreviations and Acronyms:
   1. BAC—Biological Activated Carbon
   2. CEPCI—Chemical Engineering Plant Cost Index
   3. HMI—Human-machine Interface
   4. MFS—Membrane Filtration System
   5. MMP—Membrane Module Price
   6. PLC—Programmable Logic Controller
   7. SCADA—Supervisory Control and Data Acquisition
   8. TMP—Transmembrane Pressure

1.03 REQUIREMENTS

A. The MFS shall have the flexibility to accept modules from more than one Membrane Module Manufacturer.

B. All equipment provided by the MFS Supplier shall be mounted on a single universal skid except for the air compressor system.

C. All equipment, piping, and skid frames provided by the MFS Supplier shall fit within a footprint measuring 14 feet by 5 feet with a maximum height of 10 feet (with installed modules).

D. The MFS equipment, piping, and skid frames shall be designed for outdoor use. All electrical and control panel enclosures shall be NEMA Type 4X.

E. Minor modifications to the control logic by the Owner without voiding the MFS Warranty shall be allowed. If preferred by the MFS Supplier, the Owner may request changes to the MFS, and the MFS Supplier can directly modify the control logic within two business days. The MFS Supplier shall notify the Owner within two business days if there are any issues with the request, so further discussion can lead to a suitable course of action.

1.04 MFS SUPPLIER

A. Acceptable MFS suppliers are listed below:
   1. Wigen Water Technologies
   2. Biwater AEWT, Inc.
   3. H2O Innovation, Inc.
   4. Or approved equal

1.05 SUBMITTALS

A. The following drawings by the MFS Supplier shall be provided at time of bid for the General Contractor and at a 90% design level:
   1. General Arrangement Drawing(s)
   2. Mechanical Drawings
   3. Process and Instrumentation Diagrams

B. The Contractor shall identify the MFS Supplier for this Project at the time of bid.

C. The MFS Supplier shall provide details about support services included in bid such as installation supervision, start-up, testing support, and operator training.

D. The MFS Supplier shall provide operation and maintenance manuals for the MFS and access to the control logic program before or at time of system installation.

E. The MFS Supplier shall, in coordination with the Contractor, submit a Pre-Commissioning Testing Plan and Performance Testing Plan for approval by the Engineer.

1.06 RELATED SECTIONS

A. Section 01 88 15: Anchorage and Bracing

B. Section 01 91 13: General Commissioning Requirements

C. Section 01 91 14: Testing and Startup

D. Section 40 93 00: Plant Control Philosophy

E. Section 40 91 12: Process Analyzer Measuring Systems

F. Section 40 95 10: PLC-Based Control Systems Hardware

G. Section 40 95 20: PLC-Based Control Systems Software

H. Section 43 05 11: General Requirements for Equipment

I. Section 43 23 89.13: Horizonal Variable Speed, End Suction Centrifugal Pumps

J. Section 43 41 48: High Density Crosslinked Polyethylene Tanks

K. Section 46 07 10: Chemical Systems

PART 2—PRODUCTS

2.01 MEMBRANE MODULES

A. The MFS shall be compatible with the following pressurized, self-contained membrane modules:
   1. Toray HFUG-2020AN
   2. DuPont (inge) dizzer XL 0.9 MB 80 W
   3. Nanostone CM-151
   4. Or approved equal

B. Two different modules from the list above shall be provided initially, but the MFS should be configurable to accept any of the modules without any additional piping, programming, or ancillary equipment.

2.02 MINIMUM DESIGN CRITERIA

A. Major components of the MFS shall include, but not be limited to, the following:
   1. Membrane modules.
   2. Feed pumps.
   3. Automatic strainers.
   4. Automatic backwashing system, including backwash pump, that shall be plumbed for connection to central compressed air supply.
   5. Automatic maintenance clean system, including necessary solution mixing tanks, pumps, chemical dosing pumps and piping, and controls.
   6. Automatic clean-in-place (CIP) system, including necessary solution mixing tanks, recirculation pumps, and controls.
   7. Process control system, including a master control panel and human-machine interface (HMI).
   8. Process instrumentation, including, but not limited to, pressure gauges, turbidimeters, and flow meters.
   9. Skid frame(s).

B. The following components provided by the Contractor shall require interface with the MFS:
   1. BAC Filtrate Tank (refer to Specification 43 41 48).
   2. RO Feed Tank (refer to Specification 43 41 48).
   3. Sodium hydroxide chemical storage tank (refer to Specification 43 41 48).
   4. Sodium hypochlorite chemical storage tank (refer to Specification 43 41 48).
   5. Citric acid chemical storage tank (refer to Specification 43 41 48).
   6. Chemical dosing pumps (refer to Specification 46 33 44).

C. Neutralization of waste solutions shall be provided such that the system discharges waste solutions within the pH range of 5.0–12.5. Neutralization of the CIP waste solution shall occur in the CIP Tank.

D. The net daily production of the MFS shall be 126 gallons per minute. The number of membrane modules required to satisfy the required daily production shall vary based on the membrane modules used and should be determined by the MFS Supplier. Both transmembrane pressure (TMP) and volume treated shall be capable of triggering a maintenance clean.

E. Design criteria for the MFS are provided below:

Parameter	Units	Value
System Rated Capacity (Net)	GPD	126
No. of MF Racks	--	2
No. of Membrane Modules per Rack	--	2
Membrane Type	--	Polymeric or Ceramic
Membrane Area per Module	ft^2	969 or 861 (Polymeric); 252 (Ceramic)
Membrane Nominal Pore Size	µm	0.01 or 0.02 (Polymeric); 0.03 (Ceramic)
Design Flux	GFD	100 (Polymeric); 300 (Ceramic)
Recovery	--	99%

F. The MFS shall be capable of accommodating cleaning and backwashing sequences from any of the modules listed in Article 2.01.A.

2.03 AUTOMATIC STRAINER

A. The MFS Supplier shall provide as least two automatic strainers as part of the MFS to protect the membrane modules. Each automatic strainer shall have a 500-micron rating, or the rating recommended by the Membrane Module Manufacturer(s), whichever is less. Each strainer shall be self-backwashing and constructed of materials compatible with chloramines.

B. The flow to the membrane modules shall be reduced to accommodate the additional flow required during strainer backwashing by automatically throttling a valve downstream of the strainers.

2.04 CHEMICAL CLEANS

A. Chemical solution tanks for maintenance cleans and CIPs that require mixing shall be mixed via pump recirculation.

B. The CIP tank shall be equipped with an immersion heater.

C. Chemical storage and metering pumps shall be supplied by the Contractor.

D. Injection points shall be included in the CIP tank recirculation line for sodium bisulfite, citric acid, sodium hydroxide, and sodium hypochlorite.

2.05 INSTRUMENTATION AND CONTROLS

A. A minimum of the following instrumentation for monitoring process performance must be provided:
   1. Flow (GPM)
      a. Feed
      b. Combined membrane module filtrate
      c. Backwash
   2. Temperature (°C)
      a. Feed
   3. Turbidity (NTU)
      a. Combined membrane module filtrate
   4. Pressure (PSIG)
      a. Feed
      b. Filtrate
      c. Backwash
   5. pH (Standard)
      a. Feed
      b. CIP
      c. Neutralization
   6. Adenosine triphosphate
      a. Feed
      b. Combined membrane module filtrate

B. Flow meters shall be magnetic.

C. All the readings from process instrumentation shall be displayed on the HMI. Additionally, the programmable logic controller (PLC) must calculate the following parameters:
   1. TMP (PSI)
      a. Before backwash
      b. After backwash
   2. Temperature-corrected TMP (PSI)
   3. Specific flux (GFD/PSI)
   4. Temperature-corrected specific flux (GFD/PSI)
   5. Pathogen LRV based on Integrity Testing discussed in Article 2.08

D. All data displayed on the HMI and calculated by the PLC must be logged in a text file format with data presented in rows and columns for easy conversion into Microsoft Excel. Additionally, a minimum of two weeks of data trending must be available for viewing with the HMI.

E. The PLC shall be manufactured by Allen Bradley or equal.

F. An ATP analyzer shall be installed on only one of the two trains. It shall be the Hach EZ7300 model and be pre-wired to the MFS by the MFS Supplier prior to delivery. It shall be capable of analyzing two water streams simultaneously and be programmed into the PLC as an alternative membrane integrity surrogate to turbidity.

2.07 PIPING

A. The MF skid backwash wastewater shall be designed to drain to the West Point Loma Interceptor for treatment prior to ocean disposal.

B. All skid piping shall be provided by the MFS Supplier.

2.08 INTEGRITY TESTING

A. Membrane integrity testing using a pressure decay test shall be performed once per day. The MFS Supplier and/or Membrane Module Manufacturers will be consulted to determine an acceptable rate of pressure decay (PSI/min) for the membrane modules used with the MFS. Indirect integrity testing through turbidimeters and adenosine triphosphate analyzers shall be continuous.

PART 3—EXECUTION

3.01 MFS WARRANTY

A. The MFS Supplier shall provide a standard workmanship and materials Warranty for the MFS for a period of 12 months from first use or 18 months from the date of delivery to the Owner's installation site, whichever comes first.

B. The Warranty shall apply to all work, materials, equipment, and products manufactured and incorporated by the MFS Supplier into the MFS excluding the membrane modules. Additionally, the Warranty shall include a statement that covered items are free from defects in material and workmanship when properly installed, maintained, and operated.

3.02 MEMBRANE MODULE WARRANTY

A. The MFS Supplier shall provide a Membrane Module Warranty for a duration of five years, commencing from the date of delivery from the MFS Supplier. The Membrane Module Warranty shall include a statement by the Membrane Module Manufacturers that the membrane modules will be free from defects in material and workmanship. Additionally, the Membrane Module Manufacturers shall warrant satisfactory performance of each membrane model based on the associated technical specification sheet and the tests described herein to identify integrity failure defects and irreversible flux loss failure defects.

B. The Membrane Module Warranty is subject to the following provisions:
   1. The modules are properly handled, stored, operated, cleaned, and/or maintained.
   2. The upstream processes are operating such that the MFS influent flow meets all the ranges provided in Article 1.01.A.1.
   3. The MFS Supplier has reasonable access to the operational and performance data associated with the modules.
   4. An adequate and continuous power supply is available that allows all required equipment to operate.
   5. The Owner furnishes competent operating, maintenance, and supervisory staff along with necessary laboratory facilities.

C. During the first year of the Membrane Module Warranty, the Membrane Module Manufacturer(s) shall be given the opportunity to remedy any issues with defective module(s). If the Membrane Module Manufacturer(s) cannot remedy the situation, the Membrane Module Manufacturer(s) shall repair or replace the defective module(s).

D. During the remaining four years of the Membrane Module Warranty, the Membrane Module Manufacturer(s) shall be given the opportunity to remedy any issues with defective module(s). If the Membrane Module Manufacturer(s) cannot remedy the situation or repair the modules, the Membrane Module Manufacturer(s) shall replace the defective module(s) at the following price:
   1. Prorated Price = [(Defect Notification Date – Warranty Start Date) × Membrane Module Price] ÷ Total Warranty Period
      a. The Defect Notification Date is the date that the Membrane Module Manufacturer(s) receive the written notification from the Owner concerning a potential defect in a membrane module(s).
      b. The Warranty Start Date is the date of delivery from the MFS Supplier.
      c. The Total Warranty Period is sixty months.
      d. The Membrane Module Price (MMP) shall be determined according to Article 3.02.F.
      e. The difference between the Defect Notification Date and the Warranty Start Date shall be rounded to the nearest whole month.

E. The on-site operator(s) shall install all replacement modules.

F. The MMP shall be the value, in U.S. dollars, for one membrane module supplied by the MSF Supplier. The MMP shall include all costs associated with the membrane module, such as materials, tools, packaging, shipping, shipping coordination for delivery to the project site, and return of a defective module to the MSF Supplier.
   1. The MMP at the time of purchase during the final four years of the Membrane Module Warranty period shall be the least of the following options:
      a. The market price of the membrane module at the time of purchase.
      b. The MMP at the date of Substantial Completion subject to a 4 percent annual increase.
      c. The MMP at the date of Substantial Completion subject to an increase using the Chemical Engineering Plant Cost Index (CEPCI). The baseline CEPCI shall be the most recently published CEPCI as of the date of Substantial Completion. The adjustment to the CEPCI will be determined using the most recently published CEPCI as of the date when the replacement module(s) are purchased by the Owner.
   2. The MFS Supplier agrees to accept the MMP for purchases by the Owner associated with neither a defect nor the Membrane Module Warranty.

G. Upon discovery of a potential defect(s), the Owner shall provide written notice to the Membrane Module Manufacturer(s) within 30 calendar days. Additionally, the Owner shall allow the Membrane Module Manufacturer(s) a reasonable opportunity to verify the Owner's claim by inspecting and/or testing the equipment.

H. Defective module(s) shall be appropriately addressed by the Membrane Module Manufacturer(s) within 14 calendar days of the receipt of written notification by the Owner.

I. A membrane module defect is defined below.
   1. Integrity Failure Defect. Membrane integrity testing shall be established to meet the design and performance criteria for each membrane module. Membrane modules shall be considered to have integrity failure defects under the following conditions:
      a. If a module fails a pressure decay test and cannot be repaired.
      b. If a single module requires more than 0.50% of its fibers to be repaired (e.g., gluing or pinning) over the 5-year Warranty period. An individual fiber shall be defined as requiring repair if it fails to pass a pressure decay test.

3.02 MFS STARTUP AND TRAINING

A. Factory Acceptance Testing
   1. Factory Acceptance Testing shall be required for the MFS by the MFS Supplier. Refer to Section 01 91 14 for requirements related to the performance of and participation in Factory Acceptance Testing.
   2. A Factory Test Plan shall be developed prior to Factory Acceptance Testing. Refer to Section 01 91 14 for a detailed description of and minimum content requirements for the Factory Test Plan. Also refer to Section 01 91 14 for requirements concerning the parties responsible for development of the Factory Test Plan.

B. Functional Testing
   1. Functional Testing using dechlorinated potable water shall be required for the MFS. Refer to Section 01 91 14 for a description of and requirements for Functional Testing.
   2. A Functional Testing Plan shall be developed prior to Factory Acceptance Testing. Refer to Section 01 91 14 for additional information.
   3. Functional Testing shall include the following in addition to the requirements listed in Section 01 91 14:
      a. The MFS Supplier will perform tests to confirm all components listed in Article 2.02.A of this Section are functioning properly.
      b. MFS is properly installed, operational, and capable of completing operating cycles free of problems including, but not limited to, pump cavitation, valve cavitation, overheating, overloading, and vibration.

C. System Performance Testing
   1. System Performance Testing shall demonstrate the MFS is satisfying all relevant specifications, Contract requirements, and performance objectives. The MFS Supplier shall submit a proposed Performance Testing Plan. Refer to Section 01 91 14 for additional information.
   2. System Performance Testing of the MFS shall last for seven consecutive days.
   3. The MFS must meet the following performance requirements concurrently for the entire duration of System Performance Testing:
      a. Produce filtrate that meets the production requirements (flow) at the design flux for the appropriate operation condition.
      b. Pass all integrity tests.
      c. All components and support systems continuously function as required.
      d. Operate at the design flux with turbidity less than 0.10 NTU for 95% of the time and never exceeding 0.15 NTU.
      e. Minimum water recovery of 99%.

D. Refer to Section 01 91 14 for information concerning mechanical failures during System Performance Testing.
   1. The MFS shall be included in the Facility Acceptance Testing that will follow completion of the system performance tests and training for all processes. The Contractor is responsible for performing the Facility Acceptance Testing, but the MFS Supplier must be available to resolve any issues with the MFS that arise during Facility Acceptance Testing. Refer to Section 01 91 14 for a description of and requirements for Facility Acceptance Testing.

E. Training
   1. A training by a qualified representative shall be provided for three business days at the Project site. Follow-up training, technical support, and system troubleshooting shall include two site visits of a minimum of two business days each. Training shall occur between System Performance Testing and Facility Acceptance Testing.

END OF SECTION

THIS PAGE INTENTIONALLY LEFT BLANK

SECTION 46 61 73
AUTOMATIC STRAINERS

PART 1 GENERAL

1.01 SCOPE

A. This section covers automatic, in-line, self-cleaning, skid mounted strainers and controls to be provided as part of the MBR system membranes pretreatment.

1.02 GENERAL

A. Strainer supplier shall be responsible for selecting and providing suitable units to meet the specified conditions, including specified flow rates and mesh opening size for protection of the MBR membrane modules.

B. Equipment furnished under this section shall be fabricated and assembled in full conformity with Drawings, Specifications, engineering data, instructions, and recommendations of the equipment manufacturer, unless exceptions are noted by Engineer.

C. General Equipment Stipulations: The General Equipment Stipulations shall apply to all equipment and materials provided under this section. If requirements in this specification differ from those in the General Equipment Stipulations, the requirements specified herein shall take precedence.

D. Seismic Design Requirements: Seismic design requirements for products specified herein shall be as indicated in the Meteorological and Seismic Design Criteria section.

E. Power Supply: Power supply to the equipment shall be 460V, 3 phase, 60 Hz. The system control panel shall include control power transformers to provide lower voltages for controls and back wash valve operation.

F. Mechanical Identification: Mechanical identification consisting of equipment number plates and equipment information plates shall conform to the requirements of the Identifying Devices section and as indicated herein.

G. Quality Assurance: Strainer manufacturer shall have an installation of a similar type that have successfully strained similar feed water at similar or more aggressive conditions for at least one year.

1.03 SUBMITTALS

A. The following submittals shall be provided as specified in Section 01 33 00:

1. A copy of this specification section, with addendum updates included, and all referenced and applicable sections, with addendum updates included, with each paragraph check-marked to indicate specification compliance or marked to indicate requested deviations from specification requirements. Check marks (□) shall denote full compliance with a paragraph as a whole. If deviations from the specifications are indicated and therefore requested by the Seller, each deviation

shall be underlined and denoted by a number in the margin to the right of the identified paragraph. The remaining portions of the paragraph not underlined shall signify compliance on the part of the Seller with the specifications. The submittal shall be accompanied by a detailed, written justification for each deviation.

B. Drawings and Data: Complete fabrication and assembly drawings, together with detailed specifications and data covering materials, drive unit, parts, devices, and accessories forming a part of the equipment furnished, shall be submitted in accordance with the Submittals section. Device tag numbers indicated on the Drawings shall be referenced on the wiring and schematic diagrams where applicable. The data and specifications for each unit shall include, but shall not be limited to, the following:
   1. Equipment:
      a. Name of manufacturer.
      b. Type and model.
      c. Type of screen
      d. Screen micron rating.
      e. Filtration area.
      f. Percent open area.
      g. Description of backwash hydraulics, including triggers, methods, mechanisms, and flow rates (typical, daily, as well as maximum instantaneous and related duration)
      h. Construction materials, thicknesses, and finishes.
      i. Manufacturer’s performance data.
      j. Minimum and maximum inlet pressure.
      k. Flow rate vs pressure drop data or graphs.
      l. Overall dimensions and required clearances.
      m. Net weight and load distribution.
      n. Panel construction and wiring diagrams.
   2. Motors: As specified in Section 43 05 21.
   3. Control valve: As specified in Section 40 05 62.16
   4. References: References and contact information (including owner/end-user contact names, email addresses and telephone numbers) from an installation of a similar type that have successfully screened similar feed water for at least one year at similar or more rigorous operating conditions, including feed water source description, micron rating, screen type, hydraulic loading, velocity and backwash method to allow comparison of proposed design to these installed systems.
   5. Seismic Design Requirements: Confirmation of compliance with the requirements of the Meteorological and Seismic Design Criteria section.

C. Operations and Maintenance Data and Manuals: Operation and maintenance information shall be supplied as required per Section 01 78 23 The operation and maintenance manuals shall be in addition to any instructions or parts lists packed with or attached to the equipment when delivered.

1.04 DELIVERY, STORAGE, AND HANDLING

A. Shipping and handling and storage shall be in accordance with Section 01 61 00.

1.05 SPARE PARTS

A. Extra materials shall be furnished for the equipment as specified below.

Extra Materials	Quantity
Sets of gaskets and seals per unit	1
Complete set, strainer media per unit	1

B. Extra materials shall be packaged in accordance with the Material and Equipment section, with labels indicating the contents of each package. Each label shall indicate equipment manufacturer's name, Equipment Supplier's name, equipment name, equipment designation, part nomenclature, part number, address of nearest distributor, and current list price.

C. Extra materials subject to deterioration such as ferrous metal items and electrical components shall be properly protected by lubricants or desiccants and encapsulated in hermetically sealed plastic wrapping.

PART 2 PRODUCTS

2.01 SERVICE CONDITIONS

A. The equipment specified in this section shall be designed specifically for the straining of the primary influent (downstream of grit removal) and the blended primary effluent. The unit shall be rated for continuous duty.

2.02 PERFORMANCE AND DESIGN REQUIREMENTS

A. Performance and design requirements shall be as follows:

Design Criteria	Primary Effluent Strainer STR-330	CASSWRP influent strainers STR-370 STR-380
Quantity, No	1	2 (1 Duty, 1 Standby)
Capacity, gpm	80	250
Maximum Inlet Pressure, psig	45	20
Maximum Differential Pressure with a clean Strainer, psig	0.02	0.36
Screen Type	Perforated Plates with Circular Openings	Perforated Plates with Circular Openings

Strainer Screen Perforation Size, millimeter	2 staggered	2 staggered
Inlet and Outlet Sizes, inches	3	4
Maximum Strainer Drive Motor Horsepower, Each	0.25	0.25
Motor Enclosure Type	TEFC	TEFC
Motor Voltage/Phase	460/3	460/3

2.03 ACCEPTABLE MANUFACTURERS

A. The automatic strainers shall be:
- SP Kinney
- Fluid Engineering
- Eaton
- Amiad
- Or approved equal

2.04 CONSTRUCTION

A. The automatic strainer shall be installed in the water system piping. The strainer shall be complete with backwash external water and backwash drain control valves, inlet and outlet isolation valves, inlet and outlet valve actuators if required, local control panel, and sensing system for backwash self-cleaning operation.

B. The strainer shall be motor driven, automatic self-flushing type. The strainer body shall have a bolted cover assembly; blowoff connection with manual valve; plugged drain connection; and air vent connection with manual air vent valve when air can be trapped within the strainer body. Influent and effluent connections shall have PVC flanges SCH 80 and shall be equipped with pressure gauges. Units shall be equally-sized and of the same manufacturer, model and type.

C. Design of the strainer body shall be such that all strainer elements may be removed from the unit without disassembly of inlet or outlet piping. Strainer body shall be constructed of cast iron or fabricated body. The backwash device shall be so constructed that no permanent mechanical damage will result from the accidental entry of the large object through the inlet piping.

D. Screening Elements: Screening elements shall consist of straining media arranged vertically in a one-piece cartridge design. The cartridge shall be constructed of V-shaped profile wire or weave-wire with a V-shaped grid for structural strength with the more open end of the “V” facing towards the clean side. The design shall permit the debris to be easily dislodged during a backwash cycle. Strainer media and media retainer shall be constructed of AISI Type 316 stainless steel.

E. Differential Pressure Monitoring and Control:
   1. Differential pressure, between inlet and outlet pressure sensors shall be used to initiate a backwash cycle and shall be a dual type to also indicate any alarm

conditions. Pressure gauges with a 4 inch dial shall be provided at the inlet and outlet connections. Pressure values shall be indicated locally as well as on main control system screen and recorded and maintained in a data archive.

F. Backwash Lines:
   1. Each strainer shall have backwash line connection with a pneumatically operated full port ball valve and a manual shutoff valve to be connected to drain (BNR tank strainers) or to primary influent channel (PI pump station) by the Contractor. The backwash line shall be SCH 40 PVC pipe.
   2. Strainers shall be programmed to prohibit simultaneous backwashes. Multiple requests for backwash shall be done in sequence.

G. Valves: All units shall be provided with manually actuated inlet and outlet butterfly valves as specified in the Industrial Butterfly Valves section and as indicated in the Valve Schedule to isolate each unit. Inlet and outlet isolation valves shall be provided by the by the Strainer Supplier.

H. Drive Unit: The backwash drive motor shall be totally-enclosed fan cooled, and the operating speed shall not exceed 1,750 rpm. A gear reducer shall be provided to drive the backwash shaft. The nominal input power [kW] rating of the gear reducer shall be at least equal 1.5 times the kW rating of the of the drive motor. The drive unit shall be designed for 24 hour continuous service.

I. Controls:
   1. A factory wired local control panel complete with NEMA Type 4X type 316 stainless steel enclosure shall be provided with the strainers and mounted near the strainers and shall meet the requirements of the Control System Section 40 92 00. One local control panel shall be provided to control strainer STR-330 and one common local control panel shall be provided to control strainers STR-370 and STR-380.
   2. The operating pressure of the CASSWRP influent strainers are low and a motorized valve is provided at the discharge to throttle for creating the required backpressure during backwashes. The strainer control system shall incorporate this feature in the strainer control panel.
   3. The local control panel shall include the following:
      a. “Power On” White indicating light.
      b. Provide one (1) "Backwash Cycle On" red indicating light for each strainer.
      c. Provide one (1) "Excess Pressure Drop” or “Strainer Fault" amber indicating light for each strainer.
      d. Provide one (1) System mode selector switch (On-Off-Auto/Remote) for each strainer to manually initiate the backwash cycle or have the backwash cycle automatically controlled as described below. The manual backwash cycle shall be able to be initiated independent of the PLC controls.
      e. The Strainers may be manually operated at the MCC when in HAND mode or if E-Stop is activated at the Strainer VCP.
      f. The Strainer Outlet MOV’s may be manually operated when in LOCAL mode or if override Emergency Stop at the LCS is activated.
      g. The strainer control system shall be furnished configured and completely

commissioned by the Strainer Supplier. The strainer control system shall utilize the Ethernet/IP protocol and be completely configured by the strainer equipment supplier to ensure remote access and control from the Owner's plant control system over the Ethernet network. The PCS utilizes Micrologix PLCs that communicate over an Ethernet network. Coordination between the Strainer Supplier and PCS system supplier's programmer shall be required for a seamless integration of the strainer control system into the PCS. The following communicated I/O must be provided as a minimum:

1) Influent Strainer Backwash Cycle On
2) Influent Strainer In-On Status
3) Influent Strainer In-Auto / Remote Status
4) Influent Strainer Fault / Excessive Pressure Drop
5) Power On
6) Initiate Backwash Sequence Input
7) Enable Backwash Sequence Input
8) Status of all Inputs/Outputs required by the strainer for operation of the system
9) All timer preset values available on the vendor control panel (VCP) for timing operations
10) All remaining controls and indicators available on the VCP not already mentioned

h. Network Ethernet switch shall be provided to allow the remote I/O and SCADA system network to communicate.

4. Automatic Mode:
   a. The operator shall be able to initiate a backwash cycle from the HMI when operating in SCADA Control Mode.
   b. The operator can open, stop, and close the strainer outlet (and common strainer drain) MOV's from the HMI when the valves are operating in SCADA
   c. The automatic mode shall be PLC controlled. The automatic control sequence shall function as follows:
      1) When the system mode selector switch noted above is placed in OFF, that particular strainer shall be taken out of the backwash sequence and alarms disabled. Each selector switch position shall be monitored by the PLC for indication into the plant control system.
      2) When the system mode selector switch is placed in AUTO the backwash sequence shall progress by only backwashing one strainer at a time based on a series of user adjustable timers from the panel mounted VCP or whenever the pressure drop across the strainer is more than 2 psi (adjustable) over the normal operating differential of the strainer. Each strainer shall be provided with a user adjustable timer (1 to 1440 minutes) from the VCP which shall be used for backwash initiation frequency with a 24 hour period and an initial setting of 30 minutes. Each strainer shall also be provided with a user adjustable timer (30 to 600 seconds) from the VCP which shall be used for backwash duration or controls to operate the backwash cycle until the differential pressure across the filter returns to normal with adjustable timer to limit backwash time. The differential

pressure switch control shall be able to be disabled from the VCP.

3) Provide accommodations to allow a remote plant control system backwash initiation and enable function over an Ethernet/IP communication network connection. This remote initiation shall function in parallel with the sequence noted above. When the PCS backwash enable signal is de-asserted/disabled, the strainers backwash functions shall be disabled while in AUTO. The timers shall reset as required upon a remote command to backwash.

4) Upon the calculated differential pressure being in an alarm state for a user adjustable time delay (0 to 1,800 seconds) an alarm shall be generated to the plant control system and the strainer locked out for required service.

d. A control power transformer sized for all connected loads, with both primary leads and one secondary lead fused and the other secondary lead grounded, shall be provided.

e. Provide combination circuit breaker type magnetic motor starter for each strainer. Panel shall include an external padlockable operating handle to control the motor starter circuit breaker Terminal blocks, as required.

f. All over current devices required to supply power to external fed equipment from the control panel shall be of the miniature circuit breaker type in lieu of fuses.

5. The control panel shall be prewired, ready for power supply and field item connections. Installation contractor shall connect to all field items. Wiring shall be no smaller than 14 AWG.

6. The control panel shall distribute power to all auxiliary control devices including the backwash valve.

7. The white light shall indicate that the control circuit is energized, and the strainer is ready for operation. The amber light shall indicate that the pressure differential across the strainer is excessive, i.e., more than 4 psi over the normal operating differential of the strainer or the backwash cycle has exceeded the cleaning cycle time of 10 minutes. The red light shall indicate that the strainer is in the backwash cycle. Mechanically fastened plastic nameplates shall be provided beneath each indicating light.

8. The strainer shall automatically backwash according to a time cycle, a remote signal from the plant control system, or whenever the pressure drop across the strainer exceeds the manufacturer's recommended differential pressure over the normal strainer operating differential. The maximum pressure drop shall not exceed 7 psi before a backwash is initiated. The timer shall initially be set to backwash the strainer every two hours, or as needed to meet the water conditions, regardless of differential pressure.

PART 3 EXECUTION

3.01 INSTALLATION

A. Equipment installed under this section shall be erected and placed by the Contractor per the recommendations of the equipment manufacturer, unless exceptions end of section.

END OF SECTION

SECTION 46 63 23.01

CONVENTIONAL REVERSE OSMOSIS SYSTEM

PART 1 - GENERAL

1.01 BACKGROUND

A. The purpose of reverse osmosis is to provide removal of organics and inorganics from the source water and to provide removal of pathogens.

B. The advanced water treatment at the CASSF will consist of two parallel treatment trains (Murray Treatment Train and San Vicente (SV) Treatment Train). Each with its own dedicated conventional RO system.

C. The influent to the Murray RO shall be membrane bioreactor (MBR)-treated wastewater further treated by ozone, biological activated carbon (BAC), and membrane filtration (MF).

D. The influent to the SV RO system shall be MBR-treated wastewater or MBR-treated wastewater further treated by ozone and BAC.

E. Both RO Systems will have pH adjustment with sulfuric acid and antiscalant addition.

F. RO Feed Water Quality. This list is not comprehensive of all constituents in the water and shall be used for RO system sizing purposes only and not as a reference of system performance.

Parameter	**Units**	**90th Percentile Values**	
		Murray Influent[a]	**SV influent[b]**
Iron	µg/L	<50	<50
Manganese	µg/L	<5	<30
Total Organic Carbon	mg/L	<7	<10
Raw pH	--	7.0	
Feed conductivity	µS/cm	3,388	
Calcium	mg/L	101	
Magnesium	mg/L	67	
Barium	µg/L	118	
Strontium	µg/L	1,015	
Sodium	mg/L	489	
Potassium	mg/L	35.6	
Aluminum	µg/L	45	
Ammonia	mg/L-N	<1	
Alkalinity	mg/L $CaCO_3$	100	
Orthophosphate	mg/L-P	1.0	
Sulfate	mg/L	234	
Fluoride	mg/L	1.3	
Chloride	mg/L	699	
Bromide	mg/L	2.04	
Silica	mg/L	5.7	
Nitrate	mg/L-N	19.0	

Parameter	Units	90th Percentile Values	
		Murray Influent[a]	SV influent[b]
Nitrite	mg/L-N	<0.3	
Boron	µg/L	481	
Total Dissolved Solids	mg/L	2,026	
Temperature (min – max)	°C	19 – 29	

a – refers to feed water quality for Murray Conventional RO
b – refers to feed water for San Vicente Conventional RO

1.02 REQUIREMENTS

A. All the equipment provided by the Reverse Osmosis Equipment Manufacturer (ROEM) shall be skid-mounted on a single skid (hereafter referred to as the RO system) per treatment train (i.e., Murray and SV).
   1. A single skid housing the RO Systems for both the Murray and SV treatment trains is also acceptable (but each system shall have its separate control system and monitoring instrumentation as specified in PART 2).

B. The RO System shall be manufactured by a single ROEM listed in 1.03 who should provide all the services specified herein.

C. Each RO system shall have a dedicated Programable Logic Controller (PLC) that is skid mounted and pre-wired in accordance with Section 40 95 10 (PLC - Based Control Systems Hardware) and Section 40 95 20 - PLC (Based Control Systems Software)

D. Access to the RO system control logic shall be provided to the Owner or Owner's agent.

E. Space (24 in high x 20 in wide x 12 in deep) shall be allocated on the RO System skid for a TOC monitor, which is to be supplied and installed by the Contractor. See Section 40 75 00.

F. For each treatment train, all RO System equipment, piping and skid frames shall fit in a footprint measuring 26 feet by 4 feet with a maximum height of 11.5 feet. If additional clearance is needed for the removal of RO components (e.g., membranes), the RO system may be positioned to utilize the open space surrounding the RO system area (see Drawings). All control panels, instrumentation, and equipment must be serviceable and accessible from all sides of both skids. Sufficient clearance (no less than 4 feet) should be provided on each end of the pressure vessels (feed and permeate) to install and harvest membrane elements.

G. If both treatment train RO systems are mounted on same skid, the dimensions of such skid shall not exceed twice the footprint in terms of width of an individual skid as specified above. Height shall not exceed 11.5 feet and length shall exceed 26 feet. All control panels, instrumentation, and equipment must be serviceable and accessible from all sides of such skid.

H. The RO system must be positioned so as not to obstruct the removal of UV lamps from the adjacent UV systems, according to the Contract Drawings.

I. All equipment specified in this section will be located under the process canopy. The ROEM shall supply an HVAC system for each panel to accommodate the anticipated humidity (up to 100%) and temperature range (45-90°F) at the service location. The equipment shall be suitable for the structural loads provided in the Contract Drawings. The ROEM shall coordinate with the Contractor as needed to protect the system.

J. ROEM equipment shall be furnished and installed complete with all anchors and supports, all mechanical equipment and instrumentation required for proper operation, and all additional materials or construction required by the manufacturer's design. Interconnecting piping shall be provided by the Contractor.

K. RO System equipment shall be installed, placed, and anchored in proper operating condition by the Contractor in full conformity with the drawings, specifications, engineering data, instructions, and recommendations of the ROEM and equipment manufacturer unless exceptions are proposed by the Contractor and accepted by the Engineer. The specified information does not relieve the Contractor of the responsibility to provide a fully operable system.

L. It is the intent of this specification to assure generally that work items which require the specialized expertise of an experienced ROEM be performed by that party. The Contractor shall coordinate with ROEM to allow the RO System skid installation in the area designated on the Engineer's building layout drawing.

M. As part of the overall project, the Contractor shall provide a complete and operable system including the following components, with responsibilities for each as generally described below:

1. **RO Skids:** The ROEM-supplied RO System skid units, including high pressure feed pumps and motor assembly, interstage booster pumps and motor assembly, cartridge filter housings complete with cartridge filters, membrane pressure vessels, all internal valves, piping, fittings, supports, design, startup training and service (by ROEM). Transfer pumps shall be provided loose by ROEM. Installation of the skid mounted unit and field wiring for transfer pumps (by Contractor).

2. **Membrane Elements:** RO membrane elements (by Contractor). Installation into skid- mounted unit (by Contractor under supervision of ROEM).

3. **RO CIP System:** Piping/hoses, valves and fittings, and ability for RO system PLC to interface with RO CIP System (by ROEM). Installation of skid mounted Common CIP System, including cleaning tank, circulating pumps, cartridge filters, heater, controls, instrumentation (by Contractor).

4. **Chemical dosing:** quills and static mixers shall be skid mounted for addition of chemicals in-line to feed system on RO system (by ROEM).

RO System PLC shall have ability to interface with metering pumps to maintain a feed pH level (by ROEM). Provision and installation of metering pumps, and chemical tanks, containment, and controls (by Contractor).

5. **Instrumentation and Control**: Instrumentation and control system for the RO System skids including a vendor PLC with data communications ability, and water quality monitors, flow meters, pressure gauges, differential pressure gauges, conductivity meters and other process instruments as well as ability for PLC to interface with the RO Feed Tank, RO CIP System, and RO Flush Pump (by ROEM).

6. **Electrical Connections:** All of the RO system equipment shall be pre-wired and mounted to the RO Skid Master Starter Panel or Master PLC Panel which are mounted on the RO System (by ROEM). Physical location for electrical connection shall be provided by ROEM.

7. **Power:** Power is available at 480V, 3 phase, 60 Hz. To facilitate electrical installation, the Contractor is responsible for furnishing, installing and connecting power at one consolidated physical location for the RO System.

8. **Interconnecting Piping**: All interconnecting piping and between the ROEM- furnished equipment and the plant process piping and drains (by Contractor).

9. **O&M Manuals:** Operation and maintenance manuals (before plant start-up), and field training during the commissioning period. (by ROEM)

1.03 RO EQUIPMENT MANUFACTURER

A. A single RO equipment manufacturer shall provide skids for both treatment train RO systems (i.e., Murray and the San Vicente).

B. Acceptable ROEMs are listed below:

1. Biwater AEWT, Inc.
2. H2O Innovation, Inc.
3. Wigen Water Technologies
4. Or approved equal

1.04 REFERENCE INSTALLATIONS

A. Unless listed by name in this specification, the Contractor shall provide documentation of the ROEM experience with the design, assembly and installation of RO Systems. The ROEM shall have verifiable similar designs and installations in operation, treating similar water quality at the same or higher proposed flux at a recovery of no less than 85%. Only municipal water or reuse water projects will apply as comparable projects meeting these requirements.

B. Owner reserves the right to contact each of the facilities provided for reference. If the facility is deemed not applicable, the reference will not be considered as valid.

1.05 SUBMITTALS

A. The following drawings by the ROEM shall be provided at time of bid for the Contractor and at a 90% design level:

1. General Arrangement Drawing(s)
2. Mechanical Drawings
3. Process and Instrumentation Diagrams
4. Manufacturer membrane element specification and operating limit sheets.

B. The Contractor shall identify the ROEM for this project at time of bid.

C. Detailed scope of supply

D. The ROEM shall also provide details and number of days for support services included in bid, such as installation supervision, startup and testing support, and operator training. Details shall also be provided for the cost of optional support services that might be necessary in addition to those support services that are included in the bid.

E. The ROEM shall provide operation and maintenance manuals for the system. This shall include complete operations and maintenance manuals, maintenance procedures, spare parts lists, and field procedures.

F. The ROEM shall provide access to the control logic program before or at time of system installation.

G. The ROEM shall provide Warranty Information for RO System and supplied equipment.

H. Value engineering suggestions by the ROEM to reduce cost but maintain functionality are acceptable.

I. Other additional cost items that would enhance functionality and flexibility of the pilot RO system are acceptable and will be considered.

J. ROEM shall provide programming to develop SCADA controls and screens for the RO System HMI. ROEM shall coordinate with Contractor to integrate the RO system into the plant control system.

K. ROEM shall provide design criteria calculations and projections for intended use of system at up to 95% recovery.

1.06 RO SYSTEM EQUIPMENT WARRANTY

A. For a period of 24 months, commencing from final acceptance by the Owner, the ROEM guarantees the following that all work, materials, equipment and products provided by the ROEM, exclusive of the membrane modules, will be free from faulty materials, workmanship, or defect at the time of delivery, provided that the equipment is used, cleaned and maintained in accordance with the procedures defined in the ROEM system operation and maintenance technical manuals.

B. The ROEM shall make, or have made at the expense of the ROEM, repairs,adjustments, replacements, or other corrective work necessary to restore or bring into full compliance with the requirements of the specifications any part of the work, materials, or equipment, which during the warranty period is found to be deficient with respect to any provision of the Specification, provided that the equipment is used, cleaned and maintained in accordance with the procedures defined in the ROEM system operation and maintenance technical manuals.

1.07 RELATED SECTIONS

A. Section 40 91 12 - Process Analyzer Measuring Systems

B. Section 40 93 00 - Plant Control Philosophy

C. Section 40 95 10 - PLC - Based Control Systems Hardware

D. Section 40 95 20 - PLC - Based Control Systems Software

E. Section 43 05 11 - General Requirements for Equipment

F. Section 43 41 48 - XLHDPE Tanks

G. Section 46 07 10 - Chemical Systems

H. Section 46 63 24 - RO CIP System

I. Section 46 63 23.04 - Reverse Osmosis Membrane

PART 2 - PRODUCTS

2.01 SYSTEM CONFIGURATION

A. The CASSF must be designed to operate unattended 24 hours per day at maximum capacity with periodic operator intervention. The RO System shall be automatically controlled from a dedicated programmable logic controller (PLC). The RO System must be capable of automatic shutdown upon a fault condition and shall have only manual restart capabilities.

B. The RO System shall be capable of continuous automatic operation.

C. Each RO System (i.e., Murray and SV) shall be controlled by a dedicated PLC with HMI furnished and programmed by ROEM. The PLC with HMI shall control operation of the RO membrane skid and have ability to interface with the RO CIP system and master PLC.

D. The pressurized feed water shall be routed to the membrane elements installed within the vessels on each train. The pressurized train feed is routed to the first stage. The concentrate from the first stage vessels is manifolded and routed to the second stage, and the concentrated from the second stage is manifolded and routed to the third stage. Each stage on each skid has its own booster pump, which enable control of the flux and permeate flow at each stage. The final concentrate is manifolded and routed to a concentrate flow control valve on each skid and then to the common membrane concentrate waste header, which shall discharge to plant drain as indicated on the drawings. The concentrate flow control

valve shall interface with the RO System PLC to maintain recovery setpoint. The permeate from each stage shall be manifolded and routed to a common permeate header exiting the membrane system to the RO Flush Tank and downstream ultraviolet disinfection system.

E. The RO System shall provide connections, valving and controls to perform automated permeate flushes from a common RO flush system. The connections for RO permeate flushes and CIP system shall be according to drawings. Flush water shall come from the RO Flush Tank via the RO Flush Pump, which shall be furnished and installed by the Contractor. CIP solution will come from the CIP system from a CIP feed header, which shall be furnished and installed by the Contractor. Flexible hosing will be used to connect from the RO skid to the CIP feed header. CIP solution shall be returned to the CIP tank via the CIP Return Header. Flexible hosing will be used to connect from the RO skid to the CIP return header. The RO System PLC shall have ability to interface with RO CIP System and RO flush pump.

2.02 RO SYSTEM DESIGN CRITERIA

A. The Murray RO system shall use MBR treated wastewater further treated by ozone, biological activated carbon (BAC), and membrane filtration (MF) as feed water. The SV RO system shall use MBR-treated wastewater <u>or</u> MBR treated wastewater further treated by ozone and BAC.

B. The RO System shall be an integrated system of skid-mounted equipment.

C. The footprint and layout of the RO System shall be no greater than the footprint indicated on the drawings and described in the Requirements under Article 1.02.

D. The membrane system shall meet the following design criteria. The skid shall be laid out as shown in the table below, and it shall be suitable for the range of operation defined in this table. The design criteria shall be the same for both treatment train RO systems (i.e., Murray and San Vicente).

Parameter	**Value**
Permeate Capacity per Train, gpm	17.3
Pressure Vessel Array	2:1:1
Number of Elements per Stage ($1^{st}/2^{nd}/3^{rd}$)	7/7/8
Element Diameter, inches ($1^{st}/2^{nd}/3^{rd}$)	4/4/2.5
Average Train Flux Rate, gfd	13.3
Design Recovery per Train, percent	85 to 95
Stage 1 Feed Flow, gpm	18.2 to 20.4
Stage 1 Permeate Flow, gpm	10.9
Stage 2 Feed Flow, gpm	7.5 to 9.5
Stage 2 Permeate Flow, gpm	4.9

Parameter	Value
Stage 3 Feed Flow, gpm	2.5 to 4.6
Stage 3 Permeate Flow, gpm	1.6
Concentrate Flow, gpm	0.9 to 3.1

E. Major components for each RO System (i.e., Murray and SV) shall include but are not limited to the following items:

1. RO transfer pump (shipped loose)
2. Cartridge filter
3. RO feed pump
4. Interstage booster pumps
5. RO pressure vessels
6. RO membrane elements (provided by Contractor)
7. System controls with user interface and data logging
8. Instrumentation
9. Skid frame
10. Chemical quills
11. Static mixers
12. Sample Panel

F. The following components shall require interface with the RO system but shall beprovided by the Contractor:

1. RO CIP System (Section 40 63 24)
2. Chemical Systems (Section 46 07 10)
3. XLHDPE Tanks (Section 43 41 48)
4. Process Analyzer Measuring Systems (Section 40 91 12)

2.03 RO TRANSFER PUMP

A. A transfer pump shall be provided by ROEM and provide sufficient head to pass through cartridge filter and provide sufficient head for downstream RO feed pump.

B. The transfer pump shall be fed by an atmospheric feed tank and provide at least 40 psi of developed head at 20 gpm.

C. The transfer pump shall be controlled by RO PLC with HMI and shall have ability to interface with RO feed tank to turn off when feed tank level is low.

D. The transfer pump shall be shipped loose. Installation and field wiring will be performed by Contractor.

2.04 CARTRIDGE FILTER

A. A cartridge filter shall be provided by the ROEM for protection of the RO membranes. The cartridge filter element(s) shall have a nominal rating of 5 microns and shall be melt blown.

B. Filter housing design pressure shall be no less than 90 psi.

C. Cartridge filter loading rate shall not exceed 5 gallon per minute per 10 inch equivalent.

D. Filter housing material shall be high flow polypropylene (or equivalent).

E. Filter housing seals shall be Buna-N (or equivalent).

2.05 RO FEED PUMP

A. One RO feed pump shall be provided by the ROEM. The RO feed pump shall be equipped with a variable frequency drive (VFD). The RO feed pump shall be skid mounted.

B. The RO feed pump shall provide sufficient head and flow to meet design criteria requirement across anticipated temperature range and water quality as noted herein. Furthermore, the pump shall provide sufficient head for end of life membranes using membrane filtered wastewater effluent fouling factors.

1. The feed pump shall provide at least 150 psi of developed head at 18 gpm.

C. The feed pump shall be stainless steel horizontal multistage end suction pumps and rated for 460V, 3 phase.

D. The RO feed pump shall be skid mounted on RO system and be controlled by RO PLC with HMI.

2.06 RO INTERSTAGE PUMPS

A. An interstage booster pump with VFD shall be provided to increase the feed pressure of each stage (i.e., second stage and third stage).

1. Second stage interstage booster pump shall provide at least 75 psi of developed head at 13 gpm.
2. Third stage interstage booster pump shall provide at least 75 psi of developed head at 5 gpm.

B. Each RO booster pump shall be provided by the ROEM and shall provide sufficient head and flow to meet design criteria requirement across anticipated temperature range and water quality as noted herein.

C. Each interstage pump shall be at a minimum stainless steel horizontal multistage end suction pumps and rated for 460V, 3 phase. Duplex stainless steel shall be used to prevent chloride stress corrosion and chloride pitting corrosion.

D. Each interstage booster pump shall be skid mounted on RO system and be controlled by RO PLC with HMI.

2.07 PRESSURE VESSELS

A. The ROEM shall provide and skid mount pressure vessels.

1. The first and second stage vessels shall be 4-inch in diameter, with a length to house seven (7) 4-inch elements.

2. The third stage vessels shall be 2.5-inch in diameter, with a length to house seven (7) 2.5-inch elements.

a. The third stage shall also have a canary vessel to accommodate an eight (8th) 2.5-inch membrane. The canary

vessel shall have a rotameter to track performance of the last element in the 3rd stage as an early indicator of scaling. There shall be ability to bypass canary vessel if not used.

B. Vessels shall have a maximum working pressure of not less than 300 psi at a temperature up to 40 degrees Celsius. Each vessel shall be hydrostatically tested at the factory for 1.5 times the working pressure.

C. All pressure vessel seals shall be new, Viton or at minimum peroxide cured EPDM.

D. Manufacturers or equal:

1. Code Line Divisions, Structural North America
2. Progressive Composite Technologies, Inc. (ProTec)
3. Or approved equal

2.08 ANTISCALANT ADDITION

A. The ROEM shall include ability for antiscalant chemical addition to achieve an antiscalant dose between 0.1 and 3 mg/L using undiluted antiscalant product. The antiscalant chemical addition system supplied by ROEM shall consist of a chemical quill, static mixer, and ability to interface with and control chemical dosing pump. Contractor shall provide chemical dosing pump, piping, and controls.

B. The RO system shall allow the operator to set the antiscalant dose using the HMI, which shall be calculated based on flow.

C. The ROEM and Contractor shall coordinate to run the appropriate piping with chemical containment and necessary control and electrical wiring to the RO System, where the dosing point will be. The Contractor shall calibrate the pump for accurate dosing.

D. The antiscalant chemical dosing pump, containment, and tanks shall be according to Chemical Systems (Section 46 07 10).

E. The addition of antiscalant shall be added after sulfuric acid addition point and after the RO static mixer.

2.09 SULFURIC ACID CHEMICAL ADDITION

A. The ROEM shall include ability for sulfuric acid chemical addition to achieve a sulfuric acid dose between 8 and 100 mg/L using 93% sulfuric acid. The sulfuric acid chemical addition system supplied by ROEM shall consist of a chemical quill (compatible with 93% sulfuric acid), static mixer, and ability to interface with and control chemical dosing pump. Contractor shall provide chemical dosing pump, piping, and controls.

B. The RO system shall allow the operator to set the sulfuric acid dose using the HMI, which shall be calculated based on flow.

C. The ROEM and Contractor shall coordinate to run the appropriate piping with chemical containment and necessary control and electrical wiring to the RO System, where the dosing point will be. The Contractor shall calibrate the pump for accurate dosing.

D. The sulfuric acid chemical dosing pump, containment, and tanks shall be according to Chemical Systems (Section 40 63 24).

E. The addition of sulfuric acid shall be before antiscalant addition point and before the RO static mixer.

2.10 AUTOMATIC PERMEATE FLUSHES

A. Each RO skid shall interface with the RO Flush Pump to perform automatic permeate flushes upon system shutdown. Field wiring from RO skid to RO Flush Pump shall be by Contractor.

B. ROEM shall provide necessary skid mounted and permanent piping and valving to perform automatic permeate flushes.

C. ROEM shall provide controls to perform automatic permeate flushes by interfacing with RO Flush Pump.

2.11 CLEAN-IN-PLACE SYSTEM

A. The RO CIP shall be performed manually using a cleaning solution made up of powdered chemicals or chemicals in liquid form.

B. ROEM shall provide ability for RO system to interface with RO CIP System and provide necessary skid mounted valves to isolate RO system from Common CIP System while RO system is in production.

C. ROEM shall provide necessary skid mounted and permanent piping and valving to perform CIP procedures on individual stages.

D. Flexible hosing shall be used to connect the RO CIP feed and return header to the RO System (by CONTACTOR).

E. Contractor shall provide installation of skid mounted RO CIP System, including cleaning tank, circulating pumps, cartridge filters, heater, controls, instrumentation.

2.12 VALVES

A. The ROEM shall furnish all membrane system valves, including motor-operated valves, hand-actuated butterfly valves, and check valves, in accordance with Section 40 05 60– Valves; Section 40 05 64– Butterfly Valves; and Section 40 05 65.30– Thermoplastic Check Valves.

B. The concentrate control valve shall be a flow control valve with automated positioning to maintain recovery setpoint. Valve shall be 316SS control valve (assured automation 36 series), with V4 series with positioner, or

approved equal

C. Motor operated valves shall be provided on the feed and concentrate to perform automated permeate RO flushes upon shutdown.

D. ROEM shall provide motor actuated valves to allow permeate flush of either (or both in sequence) the 1st stage feed and the 3rd stage feed lines of the RO system upon shut-down.

E. ROEM shall provide motor actuated valves to bypass the third stage (e.g., enable or disable) while having ability to independently operate system using 1st and 2nd stage.

F. ROEM shall provide necessary valving to perform CIP procedures on individual stages.

G. Valve seals shall be minimum EPDM. PTFE or Viton/FKM is also acceptable.

2.13 PIPING

A. Piping shall meet the requirements of Section 40 05 01– Piping Systems and Section 40 05 06.16– Piping Connections.

B. Pipe material shall be as follows:

1. Feed piping up to the first stage booster pump shall be Schedule 80 PVC, fabricated in accordance with ASME B16.5. Feed piping after the high pressure feed pump shall be 316L stainless steel unless otherwise specified.

2. Permeate piping shall be Schedule 80 PVC in accordance with ASME standards.

3. Concentrate piping from the header up to the concentrate control valve shall be duplex stainless steel. Concentrate piping after the concentrate control valve shall be Schedule 80 PVC, fabricated in accordance with ASTM D1748.

4. Any on-skid dedicated CIP and permeate flush piping shall be Schedule 80 PVC in accordance with ASME standards.

5. Feed manifolds shall be fabricated from 316L stainless steel. Concentrate manifolds shall be fabricated from duplex stainless stee. Completed components shall be hydrostatically tested prior to final assembly.

2.14 RO SYSTEM SKID

A. RO System skid, pumps, pressure vessels, piping, pre-filter cartridge housings, and all other components shall be factory assembled on a skid

and supporting structure constructed of corrosion resistant materials. The skid shall be installed on the equipment pad by the Contractor.

B. RO System skid and supporting structure shall be one of the following:

1. Type 316 stainless steel.

2. Welded carbon steel, free of weld slag and finished with a baked, electrostatic powder or two-part epoxy coated material. Mounting hardware and fasteners shall be 316 stainless steel. The use of any material other than 316 SS must be approved by the Engineer.

3. Fiberglass reinforced plastic (FRP) structural shapes complying with ASTM D-570 for water adsorption. Structural shapes shall be Extren 500 or equal. All joints shall be glued and or bolted/riveted for maximum strength.

C. Support structures must be free of pockets and niches that may not be coated initially and will present on-going maintenance problems for the Owner due to poor accessibility.

D. Skid Dimensions shall fit in the space available and shall not be greater than 26’ L x 4’ W x 11.5’ H for the seven-element skid.

E. Skid shall be attached to a concrete pad with stainless steel anchors, with provisions for leveling the skid before grouting. Anchor bolts shall be provided by ROEM in accordance to Section 43 05 11 – General Requirements for Equipment.

2.15 SAMPLE PANEL

A. A sampling panel on the side of each train shall be provided to facilitate collecting samples from the following locations:
   1. Train feed water.
   2. Combined train product water (i.e., taken after stage 1, 2, and stage 3
      permeate have been blended).
   3. Train total concentrate water (i.e., taken after the recovery control valve).
   4. Combined stage 1 permeate.
   5. Combined stage 2 permeate.
   6. Combined stage 3 permeate.
   7. Permeate from the end of each pressure vessel.
   8. Interstage between stages 1 and 2.
   9. Interstage between stages 2 and 3.

B. The sample panels should be installed so that the panel face can be easily removed to access sample tubing and wiring. Hardware shall be constructed of 316/316L stainless steel.

C. Drainage shall be provided for sample panels with drain troughs where required, specifically below the sample valves.

D. Labels shall be provided adjacent to each sample tap (black letters on white background).

2.16 INSTRUMENTATION AND CONTROLS

A. A minimum of the following instrumentation must be provided for each RO system (Murray and SV) to allow smooth operation of the system:
   1. ORP (mV) with transmitter of RO feed water before addition of chemicals (by ROEM)
   2. Conductivity (µS) and pH with transmitter on RO feed water after cartridge filter and after addition of chemicals (by ROEM)
   3. Feed pressure (psi) (gauge) after transfer pump and associated switches (by ROEM)
   4. Feed pressure (psi) (gauge) before and after cartridge filter and associated switches (by ROEM)
   5. Feed pressure (psi) (gauge and transmitter) before and after RO feed pump and associated switches (by ROEM)
   6. Feed pressure (psi) (gauge and transmitter) after each interstage booter pump and associated switches (by ROEM)
   7. Concentrate pressure (psi) (gauge and transmitter) of each stage and associated switches (by ROEM)
   8. Permeate pressure (psi) (gauge) of each stage (by ROEM)
   9. Conductivity (µS or mS) of each stage concentrate and permeate (by ROEM)
   10. Magnetic flow meters on Stage 1 and 2 combined permeate, Stage 2 feed, Stage 2 concentrate, Stage 3 permeate Stage 3 concentrate. (by ROEM)
   11. Conductivity of combined RO permeate (combined from Stages 1,2, and 3) (by ROEM)
   12. Dual-stream online TOC analyzer that measures TOC of combined permeate from each RO system (Murray and SV) (by Contractor)
   13. Multi-stream online strontium analyzer that measures strontium of combined permeate from each RO system (Murray and SV) (by Contractor)
   14. Nitrate/nitrite probe for combined permeate of SV train only (by Contractor)
   15. Free ammonia and total chlorine analyzer on feed of SV train only (by Contractor)

B. All instruments shall be provided by the ROEM unless indicated otherwise. Installation shall be skid mounted unless indicated otherwise. Instruments shall monitor parameters as shown on the Contract Drawings.
   1. The equipment shall include all instrumentation related to the RO System as identified in the specifications, as shown on the drawings, and as necessary to measure and display the process parameters described herein. See Related Specification Sections for additional information. The ROEM shall coordinate with the Contractor on the specific requirements for communication to the Plant SCADA Control System.
   2. Instruments shall be selected by the ROEM for an appropriate range

given where they are installed in the system. Flow meters selected to monitor permeate flows shall achieve the required accuracy on a low-TDS, low-conductivity stream.

C. Skid Instrument Panel and Local Gauges:
   1. ROEM shall furnish a Skid Instrument Panel for the RO system skid. Each instrument installed on a skid by the ROEM shall have a display and/or transmitter remote-mounted to the Instrument Panel.
   2. All power and instrument cables shall be terminated at the Skid Instrument Panel located on the RO System skid. PLC input signals related to skid instrumentation shall be distributed from the Skid Instrument Panel to the Plant Control System as shown on the Contract Drawings. Access to Skid Instrument Panels shall be located on each skid so they can be easily accessed, without obstruction from other equipment for ease of operation.

D. RO Control Panels
   1. Each RO System train (Murray and SV) will be controlled by a dedicated ROEM provided PLC which shall be linked to the Plant SCADA Control System as shown on the drawings for integration of the system with the overall facility. Requirements for RO System instrumentation, local panels, PLC programming and the interface between the RO System skids and the Plant SCADA System are discussed in Section 40 61 13– Process Control System General Provisions 40 93 00– Plant Control Philosophy.
   2. The RO System skid control panels shall be NEMA 4X stainless steel enclosures.
   3. Integration between the RO System skid PLC and the Plant SCADA Control System shall be completed by the Contractor.

E. Data Display and Normalization:
   1. The following process variables, as minimum, shall be displayed on the face of the RO membrane HMI skid control panel.
      a. RO feed pH, ORP, conductivity, and temperature.
      b. RO permeate conductivity.
      c. RO membrane feedwater pressure (measured at the Stage 1 inlet manifold).
      d. RO membrane interstage pressures (measured at the inlet and outlet of interstage pumps of Stage 1 and Stage 2).
      e. RO membrane final concentrate outlet pressure (measured at the manifoldupstream of the concentrate control valve).
      f. RO permeate pressure (measured at common permeate manifold).
      g. Total feed water flow to the skid as well as permeate and concentrate water flow from the skid.
      h. Measured permeate water flow and calculated permeate flux

at each stage and from the skid overall.

2. The RO System PLC shall calculate, and log normalized data for each stage and overall RO system for each skid. Normalized permeate flow, normalized salt passage, and normalized conductivity shall be calculated and logged by the SCADA system for each RO skid. Normalized differential pressure shall be calculated and logged by the SCADA system for each stage of each RO skid. The ROEM shall program the RO System PLC to normalize data using the equations presented in ASTM D-4516.

2.17 SPARE PARTS AND SPECIAL TOOLS

A. General: Special tools and spare parts shall be furnished by the manufacturer of the respective equipment item. Spare parts shall be suitable packages labeled with respect to their contents and delivered to Owner. Indicated quantities below do not include installed items or items consumed by the Contractor.

B. Spare Parts

1. Three (3) brine seals for use with the membrane elements and ten (10) O-rings or other type of seals for element permeate tube interconnectors.
2. Spare components for pressure vessels, including:
   a. Two (2) product water tube (PWT) adaptor seals
   b. Two (2) PWT adaptors with seals
   c. Two (2) head seals
   d. Two (2) sets of head retaining rings (with fasteners)
   e. Two (2) PWT shims
   f. One (1) complete head assemblies
   g. One (1) complete set of cartridge filters for each RO system
3. All provided spare seals shall be new, Viton or at minimum peroxide cured EPDM.

C. Special Tools

1. One head retainer ring pliers or other tools required for vessel head removal.

PART 3 - EXECUTION

2.18 INSTALLATION OF REVERSE OSMOSIS SYSTEM SKIDS AND MEMBRANE ELEMENTS

A. All installation of RO System skids shall be by the Contractor under supervision of the ROEM unless otherwise noted.

B. Pressure vessels shall be shop installed by the ROEM in conformance with

the vessel manufacturer's recommended procedures, instructions, and the Shop Drawings. Manifolds and vessel supports shall be adjusted to achieve the indicated port coupling alignments.

C. Installation of membrane elements into RO skids shall be by Contractor under supervision of ROEM. The position of each element shall be recorded by element serial number by Contractor. If the Membrane Element Manufacturer has specified a loading order based on element type or test data the elements shall be installed in that order.

3.01 STARTUP AND TRAINING

D. The ROEM shall provide factory functional testing, pre-commissioning testing, and commissioning testing. The purpose of the pre-commissioning testing, which is to last no longer than 30 days, is to permit the ROEM to ensure the RO system is operating properly before the commissioning test. The commissioning test is intended to confirm the RO system can perform within the specifications during normal operation.

E. The ROEM is responsible for providing a qualified representative to perform these tasks and shall coordinate these activities with relevant parties. Permeate produced during startup and commissioning shall be disposed of per the Owner or Owner's agent requirements.

F. Pre-commissioning testing: Pre-commissioning is the systematic demonstration through testing and extended operation that major equipment and ancillary systems, including related components, sub-systems, and systems operate properly and consistent with their intended function. Pre-commissioning involves balancing, adjustments, calibration, loop checks, and loop validation. Pre- commissioning shall simulate shutdown conditions, failure conditions, power fail and restart, bypass conditions, and failure resets. The ROEM shall submit a proposed test protocol for the commissioning test to the Owner or Owner's agent, who must approve the test plan before the RO system supplier can begin the commissioning test. The Owner or Owner's agent approval is required for the completion of pre-commissioning. Pre-commissioning shall be completed prior to the 30-day initial operation period described in Section 01 91 13 and 01 91 14.

G. Performance testing during commissioning: The commissioning test shall demonstrate the membrane system is satisfying operational and maintenance requirements. The ROEM shall submit a proposed test protocol for the commissioning test to the Owner or Owner's agent, who must approve the test plan before the ROEM can begin the commissioning test. The commissioning test will consist of the following elements:

1. The RO system supplier will perform tests to confirm all equipment is functioning properly during the entire commissioning test.
2. Testing will confirm the RO system is properly installed, operational, capable of completing operating cycles free of problems, and free from pump or valve cavitation, overheating, overloading, vibration or other operating problems.

H. The commissioning test will be completed when the RO system has met

the following performance requirements concurrently for a continuous period of operation of 168 hours:

1. The RO system shall continuously produce permeate that meets the production requirements at the design recovery.
2. All components and support systems of the RO system shall continuously function as required.
3. Any failure to meet these requirements or malfunction of equipment supplied by the RO system shall require a complete repeat of the commissioning test at no additional expense to the Owner.
4. The ROEM shall submit a report summarizing the results of the commission test to the Owner or Owner's agent. Acceptance of this report will signify the completion of the commission test and the acceptance of the RO system.

A. Training: A thorough training by a qualified representative shall be provided for 3 business days at the project site. Follow-up training, technical support and systemtroubleshooting shall include two site visits of a minimum of 2 business days each.Training shall occur during the 7-day initial operation period as described in Section 01 91 13 and 01 91 14.

END OF SECTION

SECTION 46 63 23.02

CLOSED CIRCUIT REVERSE OSMOSIS SYSTEM

PART 1 - GENERAL

1.01 BACKGROUND

A. The purpose of a closed circuit reverse osmosis is to provide removal of organics and inorganics from the source water and to provide removal of pathogens.

B. The advanced water treatment at the CASSF will use one Closed Circuit reverse osmosis system in parallel to other reverse osmosis technologies.

C. The influent to the Closed Circuit RO System shall be membrane bioreactor (MBR)-treated wastewater further treated by ozone, biological activated carbon (BAC), and membrane filtration (MF).

D. The Closed Circuit RO Systems will have pH adjustment with sulfuric acid and antiscalant addition.

E. RO Feed Water Quality. This list is not comprehensive of all constituents in the water and shall be used for Closed Circuit RO System sizing purposes only and not as a reference of system performance.

Parameter	**Units**	**90th Percentile Values**
Iron	µg/L	<50
Manganese	µg/L	<5
Total Organic Carbon	mg/L	<7
Raw pH	--	7.0
Feed conductivity	µS/cm	3,388
Calcium	mg/L	101
Magnesium	mg/L	67
Barium	µg/L	118
Strontium	µg/L	1,015
Sodium	mg/L	489
Potassium	mg/L	35.6
Aluminum	µg/L	45
Ammonia	mg/L-N	<1
Alkalinity	mg/L $CaCO_3$	100
Orthophosphate	mg/L-P	1.0
Sulfate	mg/L	234
Fluoride	mg/L	1.3
Chloride	mg/L	699
Bromide	mg/L	2.04
Silica	mg/L	5.7
Nitrate	mg/L-N	19.0
Nitrite	mg/L-N	<0.3
Boron	µg/L	481
Total Dissolved Solids	mg/L	2,026
Temperature (min – max)	°C	19 – 29

1.02 REQUIREMENTS

A. All the equipment provided by the Closed Circuit Reverse Osmosis Equipment Manufacturer (CCROEM) shall be skid-mounted on a single skid and be containerized (hereafter referred to as the Closed Circuit RO System).

B. The Closed Circuit RO System shall be manufactured by a single CCROEM listed in 1.03 who should provide all the services specified herein.

C. The Closed Circuit RO System shall have a dedicated Programable Logic Controller (PLC) that is skid mounted and pre-wired in accordance with Section 40 95 10 (PLC - Based Control Systems Hardware) and Section 40 95 20 - PLC (Based Control Systems Software).

D. Owner will have complete administrative access to the Closed Circuit RO software.

E. Space (24 in high x 20 in wide x 12 in deep) shall be allocated on the Closed Circuit RO System container for a TOC monitor, which is to be supplied and installed by the Contractor. See Section 40 91 12.

F. The Closed Circuit RO System Skid, including piping and skid frames shall fit in a footprint measuring 20 feet by 8 feet with a maximum height of 11.5 feet. If additional clearance is needed for the removal of RO components (e.g., membranes), the Closed Circuit RO System may be positioned to utilize the open space surrounding the Closed Circuit RO System area (see Drawings). All control panels, instrumentation, and equipment must be serviceable and accessible from all sides of both skids.

G. The equipment shall be suitable for the structural loads provided in the Contract Drawings. The CCROEM shall coordinate with the Contractor as needed to protect the system.

H. CCROEM equipment shall be furnished and installed complete with all anchors and supports, all mechanical equipment and instrumentation required for proper operation, and all additional materials or construction required by the manufacturer's design. Interconnecting piping shall be provided by the Contractor.

I. The CCROEM shall supply an HVAC system for each panel to accommodate the anticipated humidity (up to 100%) and temperature range (45-90°F) at the service location.

J. Closed Circuit RO System equipment shall be installed, placed, and anchored in proper operating condition by the Contractor in full conformity with the drawings, specifications, engineering data, instructions, and recommendations of the CCROEM and equipment manufacturer unless exceptions are proposed by the Contractor and accepted by the Engineer. The specified information does not relieve the Contractor of the responsibility to provide a fully operable system.

K. It is the intent of this specification to assure generally that work items which require the specialized expertise of an experienced CCROEM be performed by that party. The Contractor shall coordinate with CCROEM to allow the

Closed Circuit RO System skid installation in the area designated on the Engineer's layout drawings.

L. As part of the overall project, the Contractor shall provide a complete and operable system including the following components, with responsibilities for each as generally described below:

1. **RO Skid:** The CCROEM-supplied Closed Circuit RO System skid unit, including feed pump (shipped loose), high pressure feed pump and motor assembly, circulation pump and motor assembly, cartridge filter housings complete with cartridge filters, membrane pressure vessels, all internal valves, piping, fittings, supports, design, startup training and service (by CCROEM). Feed pump shall be provided loose by CCROEM. Installation of the skid mounted unit and field wiring of feed pump (by Contractor).

2. **Membrane Elements:** RO membrane elements (by Contractor). Installation into skid-mounted unit (by Contractor under supervision of CCROEM).
3. **Permeate Tank and Pump:** An external dedicated permeate tank and pump shall be provided to average the permeate water quality from the CCRO system (by Contractor). The pump shall route permeate to the RO Flush Tank and downstream ultraviolet disinfection system.

4. **RO CIP System:** Piping/hoses, valves and fittings, and ability for Closed Circuit RO System PLC to interface with RO CIP System (by CCROEM). Installation of skid mounted Common CIP System, including cleaning tank, circulating pumps, cartridge filters, heater, controls, instrumentation (by Contractor).

5. **Chemical dosing:** quills and static mixers shall be skid mounted for addition of chemicals in-line to feed stream on Closed Circuit RO System (by CCROEM). Closed Circuit RO System PLC shall have ability to interface with metering pumps to maintain a feed pH level (by CCROEM). Provision and installation of metering pumps, and chemical tanks, containment, and controls (by Contractor).

6. **Instrumentation and Control:** Instrumentation and control system for the Closed Circuit RO System skids including a vendor PLC with data communications ability, and water quality monitors, flow meters, pressure gauges, differential pressuregauges, conductivity meters and other process instruments as well as ability for PLC to interface with the RO Feed Tank, RO CIP System, and RO Flush Pump (by CCROEM).

7. **Electrical Connections:** All of the Closed Circuit RO System equipment shall be pre-wired and mounted to the RO Skid Master Starter Panel or Master PLC Panel which are mounted on the Closed Circuit RO System (by CCROEM).

8. **Power:** Power is available at 480V, 3 phase, 60 Hz. To facilitate electrical installation, the Contractor is responsible for furnishing, installing and connecting power at one consolidated physical location for the Closed Circuit RO System. Physical location for electrical connection shall be provided by CCROEM.

9. **Interconnecting Piping:** All interconnecting piping and between the CCROEM- furnished equipment and the plant process piping and drains (by Contractor).

10. **O&M Manuals:** Operation and maintenance manuals (before plant start-up), and field training during the commissioning period. (by CCROEM)

1.03 RO EQUIPMENT MANUFACTURER

A. Acceptable CCROEMs are listed below:

1. Desalitech, Inc. (a DuPont brand)
2. Or approved equal

1.04 REFERENCE INSTALLATIONS

A. Unless listed by name in this specification, the Contractor shall provide documentation of the CCROEM experience with the design, assembly and installation of Closed Circuit RO Systems. The CCROEM shall have similar designs and installations in operation, treating similar water quality at the same or higher proposed flux at a recovery of no less than 85%. Only municipal water or reuse water projects will apply as comparable projects meeting these requirements.

B. Owner reserves the right to contact each of the facilities provided for reference. If the facility is deemed not applicable, the reference will not be considered as valid.

1.05 SUBMITTALS

C. The following drawings by the CCROEM shall be provided at time of bid for the Contractor and at a 90% design level:

1. General Arrangement Drawing(s)
2. Mechanical Drawings
3. Process and Instrumentation Diagrams
4. Manufacturer membrane element specification and operating limit sheets.

D. The Contractor shall identify the CCROEM for this project at time of bid.

E. Detailed scope of supply

F. The CCROEM shall also provide details and number of days for support services included in bid, such as installation supervision, startup and testing support, and operator training. Details shall also be provided for the cost of optional support services that might be necessary in addition

to those support services that are included in the bid.

G. The CCROEM shall provide operation and maintenance manuals for the system. This shall include complete operations and maintenance manuals, maintenance procedures, spare parts lists, and field procedures.

H. The CCROEM shall provide Warranty Information for Closed Circuit RO System and supplied equipment.

I. Value engineering suggestions by the CCROEM to reduce cost but maintain functionality are acceptable.

J. Other additional cost items that would enhance functionality and flexibility of the pilot Closed Circuit RO System are acceptable and will be considered.

K. CCROEM shall provide programming to develop SCADA controls and screens for the CCRO System HMI. CCROEM shall coordinate with Contractor to integrate the RO system into the plant control system.

L. CCROEM shall provide design criteria calculations and projections for intended use of system at up to 95% recovery.

1.06 CLOSED CIRCUIT RO SYSTEM EQUIPMENT WARRANTY

A. For a period of 24 months, commencing from final acceptance by the Owner, the CCROEM guarantees the following that all work, materials, equipment and products provided by the CCROEM, exclusive of the membrane modules, will be free from faulty materials, workmanship, or defect at the time of delivery, provided that the equipment is used, cleaned and maintained in accordance with the procedures defined in the CCROEM system operation and maintenance technical manuals.

B. The CCROEM shall make, or have made at the expense of the CCROEM, repairs,adjustments, replacements, or other corrective work necessary to restore or bring into full compliance with the requirements of the specifications any part of the work, materials, or equipment, which during the warranty period is found to be deficient with respect to any provision of the Specification, provided that the equipment is used, cleaned and maintained in accordance with the procedures defined in the CCROEM system operation and maintenance technical manuals.

1.07 RELATED SECTIONS

A. Section 40 91 12: Process Analyzer Measuring Systems

B. Section 40 93 00: Plant Control Philosophy

C. Section 40 95 10 - PLC - Based Control Systems Hardware

D. Section 40 95 20 - PLC - Based Control Systems Software

E. Section 43 05 11 - General Requirements for Equipment

F. Section 43 41 48: XLHDPE Tanks

G. Section 46 07 10: Chemical Systems

H. Section 46 63 23.04 Reverse Osmosis Membrane

I. Section 46 63 24: RO CIP System

PART 2 – PRODUCTS

2.01 SYSTEM CONFIGURATION

A. The CASSF must be designed to operate unattended 24 hours per day at maximum capacity with periodic operator intervention. The Closed Circuit RO System shall be automatically controlled from a dedicated programmable logic controller (PLC). The Closed Circuit RO System must be capable of automatic shutdown upon a fault condition and shall have only manual restart capabilities.

B. The Closed Circuit RO System shall be capable of continuous automatic operation.

C. The Closed Circuit RO System shall be controlled by a dedicated PLC with HMI furnished and programmed by CCROEM. The PLC with HMI shall control operation of the RO membrane skid and have ability to interface with the RO CIP System and master PLC.

D. The pressurized feed water is routed to the membrane elements installed within a single stage pressure vessel. The system shall operate as a semi-batch closed circuit reverse osmosis (CCRO) system, alternating between plug flow (PF) flushes and closed circuit (CC) mode.

E. During the closed circuit mode there shall be a recirculation loop that decouples cross-flow velocity from the flow rate through the system. During this mode, feedwater enters the system in the first cycle, producing permeate and recirculating concentrate. As more product water is produced and brine is recirculated, the brine concentration increases. When the system achieves its recovery set point, the plug flow flush initiates where brine is purged from the system. A new closed circuit cycle begins upon completion of the plug flow flush. All semi-batch operations (i.e., alternating between closed circuit and plug flow flush modes) shall occur automatically.

F. The plug flow flush concentrate shall be manifolded and routed to the common membrane concentrate waste header, which will discharge to plant drain as indicated on the drawings. The Closed Circuit RO System permeate shall be collected in a dedicated Closed Circuit RO permeate tank and pump (by Contractor) to route the RO Flush Tank and downstream ultraviolet disinfection system.

G. The Closed Circuit RO System shall provide connections, valving and controls to perform automated permeate flushes from a common RO flush system. The connections for RO permeate flushes and CIP the skid according to drawings. Flush water shall come from the RO Flush Tank via the RO Flush Pump, which shall be furnished and installed by the

Contractor. CIP solution will come from the CIP system from a CIP feed header, which shall be furnished and installed by the Contractor. Flexible hosing will be used to connect from the CCRO skid to the CIP feed header. CIP solution shall be returned to the CIP tank via the CIP Return Header. Flexible hosing will be used to connect from the CCRO skid to the CIP return header. The Closed Circuit RO System PLC shall have ability to interface with RO CIP System and RO flush pump.

2.02 CLOSED CIRCUIT RO SYSTEM DESIGN CRITERIA

A. The Closed Circuit RO System shall use MBR treated wastewater further treated by ozone, biological activated carbon (BAC), and membrane filtration (MF) as feed water.

B. The Closed Circuit RO System shall be an integrated system of skid-mounted equipment and shall be containerized.

C. The footprint and layout of the Closed Circuit RO System shall be no greater than the footprint indicated on the drawings and described in the Requirements under Article 1.02.

D. The membrane system shall meet the following design criteria. The skid shall be laid out as shown in the table below, and it shall be suitable for the range of operation defined in this table.

Parameter	**Value**
Permeate Capacity per Train, gpm	10
Pressure Vessel Array	1 (configured as CCRO)
Number of Elements per System	3 (up to 4 possible)
Element Diameter, inches	8
Average Train Flux Rate, gfd	12
Design Recovery per Train, percent	85 to 95
Feed Flow (during CC mode), gpm	10
Feed Flow (during PF mode), gpm	up to 60
Concentrate Flow (during PF mode), gpm	up to 60

E. Major components for the Closed Circuit RO System shall include but are not limited to the following items:

1. CCRO feed pump (shipped loose)
2. Cartridge filter
3. CCRO high pressure pump
4. CCRO circulation pump
5. RO pressure vessel
6. RO membrane elements (provided by Contractor)
7. RO permeate pump (provided by Contractor)
8. Permeate tank (provided by Contractor)
9. System controls with user interface and data logging

10. Instrumentation
11. Skid frame (containerized)
12. Chemical quills
13. Static mixers
14. Sample panel

F. The following components shall require interface with the Closed Circuit RO System but shall be provided by the Contractor:
1. RO CIP System (Section 40 63 24)
2. Chemical Systems (only applicable items for CCRO - Section 46 07 10)
3. Process Analyzer Measuring Systems (Section 40 91 12)
4. Polyethylene Tanks (Section 43 41 48)

2.03 CCRO Feed PUMP

A. A feed pump shall be provided by CCROEM and provide sufficient head to pass through cartridge filter and provide sufficient head for downstream RO high pressure pump. The feed pump shall be equipped with a variable frequency drive (VFD).

B. The feed pump shall be controlled by CCRO PLC with HMI and shall have ability to interface with RO feed tank to turn off when feed tank level is low.

C. The feed pump shall be shipped loose. Installation and field wiring will be performed by Contractor.

2.04 CARTRIDGE FILTER

A. A cartridge filter shall be provided by the CCROEM for protection of the RO membranes. The cartridge filter element(s) shall have a nominal rating of 5 microns and shall be melt blown.

B. Filter housing design pressure shall be no less than 90 psi.

C. Cartridge filter loading rate shall not exceed 5 gallon per minute per 10 inch equivalent.

D. Filter housing material shall be high flow polypropylene (or equivalent).

E. Filter housing seals shall be Buna-N (or equivalent).

2.05 CCRO HIGH PRESSURE PUMP

A. One high pressure pump shall be provided by the CCROEM. The high pressure pump shall be equipped with a VFD. The

B. The high pressure pump shall provide sufficient head and flow to meet design criteria requirement across anticipated temperature range and water quality as noted herein. Furthermore, the pump shall provide sufficient head for end of life membranes using membrane filtered wastewater effluent fouling factors.

C. The high pressure pump shall be stainless steel horizontal multistage end suction pumps and rated for 460V, 3 phase.

D. The high pressure pump shall be skid mounted on Closed Circuit RO

System and be controlled by RO PLC with HMI.

2.06 RO CIRCULATION PUMP

A. A circulation pump with VFD shall be provided to match the concentrate pressure with the feed pressure during the CC mode.

B. The circulation pump shall interface with the feed pump to maintain constant permeate flow during the CC mode.

C. The circulation pump shall be super-duplex stainless steel horizontal multistage end suction pumps and rated for 460V, 3 phase.

D. The circulation pump shall be skid mounted on the Closed Circuit RO System and be controlled by RO PLC with HMI.

2.07 PRESSURE VESSELS

A. The CCROEM shall provide and skid mount pressure vessels to accommodate the vessel array per design criteria herein.

B. Vessels shall have a maximum working pressure of not less than 450 psi at a temperature up to 40 degrees Celsius. Each vessel shall be hydrostatically tested at the factory for 1.5 times the working pressure.

C. All pressure vessel seals shall be new, Viton or at minimum peroxide cured EPDM.

D. Manufacturers or equal:
   1. Code Line Divisions, Structural North America
   2. Progressive Composite Technologies, Inc. (ProTec)
   3. Or approved equal

2.08 PERMEATE TANK AND PUMP

A. A 500 gallon permeate tank shall be provided for purpose of averaging permeate water quality from the CC cycle (by Contractor). A dedicated CCRO permeate pump shall be used to pump water from the tank to the downstream RO Flush Tank and downstream ultraviolet disinfection system (by Contractor).

B. The CCRO permeate tank material shall be high-density polyethylene (HDPE) or equal. Tank shall follow additional specifications per Section 43 41 48: XLHDPE Tanks.

C. The CCRO permeate pump shall be capable of providing 40 feet of developed head at 10 gpm. The pump shall interface with Closed Circuit RO System and shutdown on low level in CCRO permeate tank.

2.09 ANTISCALANT ADDITION

A. The CCROEM shall include ability for antiscalant chemical addition to achieve an antiscalant dose between 0.1 and 3 mg/L using undiluted antiscalant product. The antiscalant chemical addition system supplied by CCROEM shall consist of a chemical quill, static mixer, and ability to interface with and control chemical dosing pump. Contractor shall provide chemical dosing pump, piping, and controls.

B. The Closed Circuit RO System shall allow the operator to set the

antiscalant dose using the HMI, which shall be calculated based on flow.

C. The CCROEM and Contractor shall coordinate to run the appropriate piping with chemical containment and necessary control and electrical wiring to the Closed Circuit RO System, where the dosing point will be. The Contractor shall calibrate the pump for accurate dosing.

D. The antiscalant chemical dosing pump, containment, and tanks shall be according to Chemical Systems (Section 40 63 24).

E. The addition of antiscalant shall be added after sulfuric acid addition point and after the static mixer.

2.10 SULFURIC ACID CHEMICAL ADDITION

A. The CCROEM shall include ability for sulfuric acid chemical addition to achieve a sulfuric acid dose between 8 and 100 mg/L using 93% sulfuric acid. The sulfuric acid chemical addition system supplied by CCROEM shall consist of a chemical quill (compatible with 93% sulfuric acid), static mixer, and ability to interface with and control chemical dosing pump. Contractor shall provide chemical dosing pump, piping, and controls.

B. The Closed Circuit RO System shall allow the operator to set the sulfuric acid dose using the HMI, which shall be calculated based on flow.

C. The CCROEM and Contractor shall coordinate to run the appropriate piping with chemical containment and necessary control and electrical wiring to the Closed Circuit RO System, where the dosing point will be. The Contractor shall calibrate the pump for accurate dosing.

D. The sulfuric acid chemical dosing pump, containment, and tanks shall be according to Chemical Systems (Section 40 63 24).

E. The addition of sulfuric acid shall be before antiscalant addition point and before the static mixer.

2.11 AUTOMATIC PERMEATE FLUSHES

A. The CCRO skid shall interface with the RO Flush Pump to perform automatic permeate flushes upon system shutdown. Field wiring from RO skid to RO Flush Pump shall be by Contractor.

B. CCROEM shall provide necessary skid mounted and permanent piping and valving to perform automatic permeate flushes.

C. CCROEM shall provide controls to perform automatic permeate flushes by interfacing with RO Flush Pump.

2.12 CLEAN-IN-PLACE SYSTEM

A. The RO CIP shall be performed manually using a cleaning solution made up of powdered chemicals or chemicals in liquid form.

B. CCROEM shall provide ability for Closed Circuit RO System to interface with RO CIP System and provide necessary skid mounted valves to isolate Closed Circuit RO System from Common CIP System while Closed Circuit RO System is in production.

C. The RO CIP System shall be connected using flex hosing between

common feed and return CIP manifolds to the Closed Circuit RO System (by CONTACTOR).

D. Contractor shall provide installation of skid mounted RO CIP System, including cleaning tank, circulating pumps, cartridge filters, heater, controls, instrumentation.

2.13 VALVES

A. The CCROEM shall furnish all membrane system valves, including motor-operated valves, hand-actuated butterfly valves, and check valves, in accordance with Sections 40 05 60– VALVES; SECTION 40 05 64– BUTTERFLY VALVES; AND SECTION 40 05 65.30– THERMOPLASTIC CHECK VALVES.

B. The concentrate to drain valve shall be manual globe valve with positioning according to Section 40 05 66.04 - GLOBE VALVES.

C. Motor operated valves shall be provided on the feed and concentrate to perform automated permeate RO flushes upon shutdown.

D. Valve seals shall be minimum EPDM. PTFE or Viton/FKM is also acceptable.

E. Pneumatic valves are acceptable in lieu of motor valves. Manufacturer shall be Sharpe or approved equal.

2.14 PIPING

A. Piping shall meet the requirements of Section 40 05 01– PIPING SYSTEMS; Section 40 05 23– STAINLESS STEEL PROCESS PIPE AND TUBING; AND SECTION 40 05 06.16–PIPING CONNECTIONS.

B. Pipe material shall be as follows:

1. Feed piping up to the first stage booster pump shall be Schedule 80 PVC, fabricated in accordance with ASME B16.5. Feed piping after the high pressure feed pump shall be 316L stainless steel unless otherwise specified.
2. Permeate piping shall be Schedule 80 PVC, in accordance with ASME standards.
3. Concentrate loop piping from the vessel up to the feed pump header shall be super-duplex stainless steel. Concentrate piping after the concentrate control valve shall be Schedule 80 PVC fabricated in accordance with ASTM D1748.
4. Any on-skid dedicated CIP and permeate flush piping shall be Schedule 80 PVC in accordance with ASME standards.
5. Feed manifolds shall be fabricated from 316L stainless steel. Concentrate manifolds shall be fabricated from super duplex stainless steel. Completed components shall be hydrostatically tested prior to final assembly.

2.15 CLOSED CIRCUIT RO SYSTEM SKID

A. Closed Circuit RO System skid, pumps, pressure vessels, piping, pre-filter cartridge housings, and all other components shall be factory assembled on a skid and supporting structure constructed of corrosion resistant materials. The skid shall be installed on the equipment pad by the Contractor.

B. Closed Circuit RO System skid and supporting structure shall be one of the following:

1. Type 316 stainless steel (or equal).
2. Welded carbon steel, free of weld slag and finished with a baked, electrostatic powder or two-part epoxy coated material. Mounting hardware and fasteners shall be 316 stainless steel. The use of any material other than 316 SS must be approved by the Engineer.
3. Fiberglass reinforced plastic (FRP) structural shapes complying with ASTM D-570 for water adsorption. Structural shapes shall be Extren 500 or equal. All joints shall be glued and or bolted/riveted for maximum strength.

C. Support structures must be free of pockets and niches that may not be coated initially and will present on-going maintenance problems for the Owner due to poor accessibility.

D. Skid Dimensions shall fit in the space available and shall not be greater than 20 L x 8’ W x 11.5’ H for the seven-element skid.

E. Skid shall be attached to a concrete pad with stainless steel anchors, with provisions for leveling the skid before grouting. Anchor bolts shall be provided by CCROEM in accordance to Section 43 05 11 – General Requirements for Equipment.

2.16 SAMPLE PANEL

A. A sampling panel on the side of each train shall be provided to facilitate collecting samples from the following locations:

1. Train feed water.
2. Permeate water from CCRO permeate tank
3. Train total concentrate water (i.e., taken after the recovery control valve).
4. Vessel permeate
5. Circulation loop concentrate

B. The sample panels should be installed so that the panel face can be easily removed to access sample tubing and wiring. Hardware shall be constructed of 316/316L stainless steel.

C. Drainage shall be provided for sample panels with drain troughs where required, specifically below the sample valves.

D. Labels shall be provided adjacent to each sample tap (black letters on white background).

2.17 INSTRUMENTATION AND CONTROLS

A. A minimum of the following instrumentation must be provided for the

Closed Circuit RO System to allow smooth operation of the system:

1. ORP (mV) with transmitter of RO feed water before addition of chemicals (by CCROEM)
2. pH with transmitter on RO feed water after cartridge filter and after addition of chemicals (by CCROEM)
3. pH on CRRO concentrate water (by CCROEM)
4. Feed pressure (psi) (gauge) after feed pump and associated switches (by CCROEM)
5. Feed pressure (psi) (gauge) before and after cartridge filter and associated switches (by CCROEM)
6. Feed pressure (psi) (gauge and transmitter) before and after high pressure RO feed pump and associated switches (by CCROEM)
7. Ceoncetrate (psi) (gauge and transmitter) before recirculation pump and associated switches (by CCROEM)
8. Permeate pressure (psi) (gauge and transmitter) from CCRO vessel (by CCROEM)
9. Conductivity (µS or mS) of feed, concentrate, vessel permeate (by CCROEM)
10. Conductivity (µS) of discharge from CCRO Permeate Pump on permeate tank (by Contractor)
11. Magnetic flow meters on CCRO feed and concentrate recirculation line (by CCROEM).
12. Dual-stream online TOC analyzer that measures TOC of CCRO permeate tank from one stream and combined permeate from a different RO System for the other stream (by Contractor).
13. Multi-stream online strontium analyzer that measures strontium of combined permeate from the CCRO permeate tank (by Contractor)

B. All instruments shall be provided by the CCROEM unless indicated otherwise. Installation shall be skid mounted unless indicated otherwise. Instruments shall monitor parameters as shown on the Contract Drawings.

1. The equipment shall include all instrumentation related to the Closed Circuit RO System as identified in the specifications, as shown on the drawings, and as necessary to measure and display the process parameters described herein. See Related Specification Sections for additional information. The CCROEM shall coordinate with the Contractor on the specific requirements for communication to the Plant SCADA Control System.
2. Instruments shall be selected by the CCROEM for an appropriate range given where they are installed in the system. Flow meters selected to monitor permeate flows shall achieve the required accuracy on a low-TDS, low-conductivity stream.

C. Skid Instrument Panel and Local Gauges:

1. CCROEM shall furnish a Skid Instrument Panel for the Closed Circuit RO System skid. Each instrument installed on a skid by the CCROEM shall have a display and/or transmitter remote-mounted to the Instrument Panel.
2. All power and instrument cables shall be terminated at the Skid

Instrument Panel located on the Closed Circuit RO System skid. PLC input signals related to skid instrumentation shall be distributed from the Skid Instrument Panel to the Plant Control System as shown on the Contract Drawings. Access to Skid Instrument Panels shall be located on each skid so they can be easily accessed, without obstruction from other equipment for ease of operation.

D. RO Control Panels

1. The Closed Circuit RO System will be controlled by a dedicated CCROEM provided PLC which shall be linked to the Plant SCADA Control System as shown on the drawings for integration of the system with the overall facility. Requirements for Closed Circuit RO System instrumentation, local panels, PLC programming and the interface between the Closed Circuit RO System skids and the PCIS are discussed in Section 40 61 13– PROCESS CONTROL SYSTEM GENERAL PROVISIONS AND SECTION 40 93 00 – PLANT CONTROL PHILOSOPHY.
2. The Closed Circuit RO System skid control panels shall be NEMA 12 (or better) stainless steel enclosures.
3. Integration between the Closed Circuit RO System skid PLC and the Plant SCADA Control System shall be completed by the Contractor.

E. Data Display and Normalization:

1. The following process variables, as minimum, shall be displayed on the face of the RO membrane HMI skid control panel.
   a. RO feed pH, ORP, conductivity, and temperature.
   b. RO permeate conductivity.
   c. Flux across closed circuit system based on calculated permeate flow.
   d. RO membrane feedwater pressure (measured at the Stage 1 inlet manifold).
   e. RO membrane final concentrate outlet pressure (measured at the manifold upstream of the concentrate control valve).
   f. RO permeate pressure (measured at common permeate manifold).
   g. Total feed water flow to the skid as well as permeate and concentrate water flow from the skid.
   h. Measured permeate water flow and calculated permeate flux from the skid overall.
   i. Closed circuit cycle times
   j. Plug flow flush cycle times
   k. Volumetric recovery
   l. Modular recovery
   m. Remaining volume to complete plug flow flush

2. The Closed Circuit RO System PLC shall calculate and log normalized data. Normalized permeate flow, normalized salt passage, and normalized conductivity shall be calculated and logged by the SCADA system for each RO skid. Normalized differential pressure shall be calculated and logged by the SCADA system. The CCROEM shall program the Closed Circuit RO System PLC to normalize data using the equations presented in ASTM D-4516.

2.18 SPARE PARTS AND SPECIAL TOOLS

A. General: Special tools and spare parts shall be furnished by the manufacturer of the respective equipment item. Spare parts shall be suitable packages labeled with respect to their contents and delivered to Owner. Indicated quantities below do not include installed items or items consumed by the Contractor.

B. Spare Parts

1. Three (3) brine seals for use with the membrane elements and ten (10) O-rings or other type of seals for element permeate tube interconnectors.
2. Spare components for pressure vessels, including:
   a. Two (2) product water tube (PWT) adaptor seals
   b. Two (2) PWT adaptors with seals
   c. Two (2) head seals
   d. Two (2) sets of head retaining rings (with fasteners)
   e. Two (2) PWT shims
   f. One (1) complete head assemblies
   g. One (1) complete set of cartridge filters
3. All provided spare seals shall be new, Viton or at minimum peroxide cured EPDM.

C. Special Tools

1. One head retainer ring pliers or other tools required for vessel head removal.

PART 3 - EXECUTION

3.01 INSTALLATION OF REVERSE OSMOSIS SYSTEM SKIDS AND MEMBRANE ELEMENTS

A. All installation of Closed Circuit RO System skids shall be by the Contractor under supervision of the CCROEM unless otherwise noted.

B. Pressure vessels shall be shop installed by the CCROEM in conformance with the vessel manufacturer's recommended procedures, instructions, and the Shop Drawings. Manifolds and vessel supports shall be adjusted to achieve the indicated port coupling alignments.

C. Installation of membrane elements into CCRO skid shall be by Contractor under supervision of CCROEM. The position of each element shall be recorded by element serial number by Contractor. If the Membrane

Element Manufacturer has specified a loading order based on element type or test data the elements shall be installed in that order.

3.02 STARTUP AND TRAINING

A. The CCROEM shall provide factory functional testing, pre-commissioning testing, and commissioning testing. The purpose of the pre-commissioning testing, which is to last no longer than 30 days, is to permit the CCROEM to ensure the Closed Circuit RO System is operating properly before the commissioning test. The commissioning test is intended to confirm the Closed Circuit RO System can perform within the specifications during normal operation.

B. The CCROEM is responsible for providing a qualified representative to perform these tasks and shall coordinate these activities with relevant parties. Permeate produced during startup and commissioning shall be disposed of per the Owner or Owner's agent requirements.

C. Pre-commissioning testing: Pre-commissioning is the systematic demonstration through testing and extended operation that major equipment and ancillary systems, including related components, sub-systems, and systems operate properly and consistent with their intended function. Pre-commissioning involves balancing, adjustments, calibration, loop checks, and loop validation. Pre- commissioning shall simulate shutdown conditions, failure conditions, power fail and restart, bypass conditions, and failure resets. The CCROEM shall submit a proposed test protocol for the commissioning test to the Owner or Owner's agent, who must approve the test plan before the Closed Circuit RO System supplier can begin the commissioning test. The Owner or Owner's agent approval is required for the completion of pre-commissioning. Pre-commissioning shall be completed prior to the 30-day initial operation period described in Section 01 91 13 and 01 91 14.

D. Performance test during commissioning: The commissioning test shall demonstrate the membrane system is satisfying operational and maintenance requirements. The CCROEM shall submit a proposed test protocol for the commissioning test to the Owner or Owner's agent, who must approve the test protocol before the CCROEM can begin the commissioning test. The commissioning test will consist of the following elements:

1. The Closed Circuit RO System supplier will perform tests to confirm all equipment isfunctioning properly during the entire commissioning test.

2. Testing will confirm the Closed Circuit RO System is properly installed, operational, capable of completing operating cycles free of problems, and free from pump or valve cavitation, overheating, overloading, vibration or other operating problems.

3. The commissioning test will be completed when the Closed Circuit RO System has met the following performance requirements concurrently for a continuous period of

operation of 168 hours:

a. The Closed Circuit RO System shall continuously produce permeate that meets the production requirements at the design recovery.

b. All components and support systems of the Closed Circuit RO System shall continuously function as required.

c. Any failure to meet these requirements or malfunction of equipment supplied by the Closed Circuit RO System shall require a complete repeat of the commissioning test at no additional expense to the Owner.

4. The CCROEM shall submit a report summarizing the results of the commission test to the Owner or Owner's agent. Acceptance of this report will signify the completion of the commission test and the acceptance of the Closed Circuit RO System.

E. Training: A thorough training by a qualified representative shall be provided for 3 business days at the project site. Training shall include detailed written protocols for performing Clean-in-place procedures on CCRO system. Follow-up training, technical support and system troubleshooting shall include two site visits of a minimum of 2 business days each. Training shall occur during the 7-day initial operation period as described in Section 01 91 13 and 01 91 14.

END OF SECTION

THIS PAGE INTENTIONALLY LEFT BLANK

SECTION 46 63 23.03
FLOW REVERSAL REVERSE OSMOSIS SYSTEM

PART 1 - GENERAL

1.01 BACKGROUND

A. The purpose of a flow reversal reverse osmosis is to provide removal of organics and inorganics from the source water and to provide removal of pathogens.

B. The advanced water treatment at the CASSF will use one flow reversal reverse osmosis system in parallel to other reverse osmosis technologies.

C. The influent to the flow reversal Flow Reversal RO System shall be membrane bioreactor (MBR)-treated wastewater further treated by ozone, biological activated carbon (BAC), and membrane filtration (MF).

D. The flow reversal Flow Reversal RO Systems will have pH adjustment with sulfuric acid and antiscalant addition.

E. RO Feed Water Quality. This list is not comprehensive of all constituents in the water and shall be used for flow reversal Flow Reversal RO System sizing purposes only and not as a reference of system performance.

Parameter	**Units**	**90th Percentile Values**
Iron	µg/L	<50
Manganese	µg/L	<5
Total Organic Carbon	mg/L	<7
Raw pH	--	7.0
Feed conductivity	µS/cm	3,388
Calcium	mg/L	101
Magnesium	mg/L	67
Barium	µg/L	118
Strontium	µg/L	1,015
Sodium	mg/L	489
Potassium	mg/L	35.6
Aluminum	µg/L	45
Ammonia	mg/L-N	<1
Alkalinity	mg/L $CaCO_3$	100
Orthophosphate	mg/L-P	1.0
Sulfate	mg/L	234
Fluoride	mg/L	1.3
Chloride	mg/L	699
Bromide	mg/L	2.04
Silica	mg/L	5.7
Nitrate	mg/L-N	19.0
Nitrite	mg/L-N	<0.3
Boron	µg/L	481
Total Dissolved Solids	mg/L	2,026
Temperature (min – max)	°C	19 – 29

1.02 REQUIREMENTS

A. All the equipment provided by the Flow Reversal Reverse Osmosis Equipment Manufacturer (FRROEM) shall be skid-mounted on a single skid (hereafter referred to as the Flow Reversal Flow Reversal RO System).

B. The Flow Reversal Flow Reversal RO System shall be manufactured by a single FRROEM listed in 1.03 who should provide all the services specified herein.

C. The Flow Reversal Flow Reversal RO System shall have a dedicated Programable Logic Controller (PLC) that is skid mounted and pre-wired in accordance with Section 40 95 10 (PLC - Based Control Systems Hardware) and Section 40 95 20 - PLC (Based Control Systems Software)..

D. Owner will have complete administrative access to the Flow Reversal RO software to make changes and optimize performance on system's HMI..

E. The Flow Reversal Flow Reversal RO System Skid, including piping and skid frames shall fit in a footprint measuring 17 feet by 9 feet with a maximum height of 11.5 feet. If additional clearance is needed for the removal of RO components (e.g., membranes), the Flow Reversal RO System may be positioned to utilize the open space surrounding the Flow Reversal RO System area (see Drawings). All control panels, instrumentation, and equipment must be serviceable and accessible from all sides of both skids.

F. All equipment specified in this section will be located under the process canopy. The FFROEM shall supply an HVAC system for each panel to accommodate the anticipated humidity (up to 100%) and temperature range (45-90°F) at the service location. The equipment shall be suitable for the structural loads provided in the Contract Drawings. The FRROEM shall coordinate with the Contractor as needed to protect the system.

G. FRROEM equipment shall be furnished and installed complete with all anchors and supports, all mechanical equipment and instrumentation required for proper operation, and all additional materials or construction required by the manufacturer’s design. Interconnecting piping shall be provided by the Contractor.

H. Flow Reversal Flow Reversal RO System equipment shall be installed, placed, and anchored in proper operating condition by the Contractor in full conformity with the drawings, specifications, engineering data, instructions, and recommendations of the FRROEM and equipment manufacturer unless exceptions are proposed by the Contractor and accepted by the Engineer. The specified information does not relieve the Contractor of the responsibility to provide a fully operable system.

I. It is the intent of this specification to assure generally that work items which require the specialized expertise of an experienced FRROEM be performed by that party. The Contractor shall coordinate with FRROEM to allow the Flow Reversal Flow Reversal RO System skid installation in the area designated on the Engineer’s building layout drawing.

J. As part of the overall project, the Contractor shall provide a complete and operable system including the following components, with responsibilities for each as generally described below:

1. RO Skid: The FRROEM-supplied Flow Reversal Flow Reversal RO System skid unit, including high pressure feed pump and motor assembly, interstage booster pumps and motor assembly, cartridge filter housings complete with cartridge filters, membrane pressure vessels, all internal valves, piping, fittings, supports, design, startup training and service (by FRROEM). Transfer pump shall be provided loose by FRROEM. Installation of the skid mounted unit and field wiring for transfer pump (by Contractor).

2. Membrane Elements: RO membrane elements (by Contractor). Installation into skid-mounted unit (by Contractor under supervision of FRROEM).

3. RO CIP System: Piping/hoses, valves and fittings, and ability for Flow Reversal Flow Reversal RO System PLC to interface with RO CIP System (by FRROEM). Installation of skid mounted Common CIP System, including cleaning tank, circulating pumps, cartridge filters, heater, controls, instrumentation (by Contractor).

4. Chemical dosing: quills and static mixers shall be skid mounted for addition of chemicals in-line to feed stream on Flow Reversal Flow Reversal RO System (by FRROEM). Flow Reversal Flow Reversal RO System PLC shall have ability to interface with metering pumps to maintain a feed pH level (by FRROEM). Provision and installation of metering pumps, and chemical tanks, containment, and controls (by Contractor).

5. Instrumentation and Control: Instrumentation and control system for the Flow Reversal Flow Reversal RO System skids including a vendor PLC with data communications ability, and water quality monitors, flow meters, pressure gauges, differential pressure gauges, conductivity meters and other process instruments as well as ability for PLC to interface with the RO Feed Tank, RO CIP System, and RO Flush Pump (by FRROEM).

6. Electrical Connections: All of the Flow Reversal Flow Reversal RO System equipment shall be pre-wired and mounted to the RO Skid Master Starter Panel or Master PLC Panel which are mounted on the Flow Reversal RO System (by FRROEM).

7. Power: Power is available at 480V, 3 phase, 60 Hz. To facilitate electrical installation, the Contractor is responsible for furnishing, installing and connecting power at one consolidated physical location for the Flow Reversal RO System. Physical location for electrical connection shall be provided by FRROEM.

8. Interconnecting Piping: All interconnecting piping and between the FRROEM- furnished equipment and the plant process piping and drains (by Contractor).

9. O&M Manuals: Operation and maintenance manuals (before plant start-up), and field training during the commissioning period. (by FRROEM)

1.03 RO EQUIPMENT MANUFACTURER

A. Acceptable FRROEMs are listed below:

1. ROTEC, Inc.
2. Or approved equal

1.04 REFERENCE INSTALLATIONS

A. Unless listed by name in this specification, the Contractor shall provide documentation of the FRROEM experience with the design, assembly and installation of Flow Reversal RO Systems. The FRROEM shall have similar designs and installations in operation, treating similar water quality at the same or higher proposed flux at a recovery of no less than 85%. Only municipal water or reuse water projects will apply as comparable projects meeting these requirements.

B. Owner reserves the right to contact each of the facilities provided for reference. If the facility is deemed not applicable, the reference will not be considered as valid.

1.05 SUBMITTALS

A. The following drawings by the FRROEM shall be provided at time of bid for the Contractor and at a 90% design level:

1. General Arrangement Drawing(s)
2. Mechanical Drawings
3. Process and Instrumentation Diagrams
4. Manufacturer membrane element specification and operating limit sheets.

B. The Contractor shall identify the FRROEM for this project at time of bid.

C. Detailed scope of supply

D. The FRROEM shall also provide details and number of days for support services included in bid, such as installation supervision, startup and testing support, and operator training. Details shall also be provided for the cost of optional support services that might be necessary in addition to those support services that are included in the bid.

E. The FRROEM shall provide operation and maintenance manuals for the system. This shall include complete operations and maintenance

manuals, maintenance procedures, spare parts lists, and field procedures.

F. The FRROEM shall provide Warranty Information for Flow Reversal RO System and supplied equipment.

G. Value engineering suggestions by the FRROEM to reduce cost but maintain functionality are acceptable.

H. Other additional cost items that would enhance functionality and flexibility of the pilot Flow Reversal RO System are acceptable and will be considered.

I. FRROEM shall provide programming to develop SCADA controls and screens for the FRRO System PLC. FRROEM shall coordinate with Contractor to integrate the RO system into the plant control system.

J. FRROEM shall provide design criteria calculations and projections for intended use of system at up to 95% recovery.

1.06 FLOW REVERSAL RO SYSTEM EQUIPMENT WARRANTY

A. For a period of 24 months, commencing from final acceptance by the Owner, the FRROEM guarantees the following that all work, materials, equipment and products provided by the FRROEM, exclusive of the membrane modules, will be free from faulty materials, workmanship, or defect at the time of delivery, provided that the equipment is used, cleaned and maintained in accordance with the procedures defined in the FRROEM system operation and maintenance technical manuals.

B. The FRROEM shall make, or have made at the expense of the FRROEM, repairs,adjustments, replacements, or other corrective work necessary to restore or bring into full compliance with the requirements of the specifications any part of the work, materials, or equipment, which during the warranty period is found to be deficient with respect to any provision of the Specification, provided that the equipment is used, cleaned and maintained in accordance with the procedures defined in the FRROEM system operation and maintenance technical manuals.

1.07 RELATED SECTIONS

A. Section 40 91 12 - Process Analyzer Measuring Systems

B. Section 40 93 00 - Plant Control Philosophy

C. Section 40 95 10 - PLC - Based Control Systems Hardware

D. Section 40 95 20 - PLC - Based Control Systems Software

E. Section 43 05 11 - General Requirements for Equipment

F. Section 43 41 48 - Polyethylene Tanks

G. Section 46 07 10 - Chemical Systems

H. Section 46 63 23.04 - Reverse Osmosis Membrane

I. Section 46 63 24 - RO CIP System

PART 2 - PRODUCTS

2.01 SYSTEM CONFIGURATION

A. The CASSF must be designed to operate unattended 24 hours per day at maximum capacity with periodic operator intervention. The Flow Reversal RO System shall be automatically controlled from a dedicated programmable logic controller (PLC). The Flow Reversal RO System must be capable of automatic shutdown upon a fault condition and shall have only manual restart capabilities.

B. The Flow Reversal RO System shall be capable of continuous automatic operation.

C. The Flow Reversal RO System shall be controlled by a dedicated PLC with HMI furnished and programmed by FRROEM. The PLC with HMI shall control operation of the RO membrane skid and have ability to interface with the RO CIP System and master PLC.

D. The pressurized feed water is routed to the membrane elements installed within the pressure vessels. Flow Reversal operation shall be used for a 4-stage Flow Reversal RO System with 10 pressure vessels dedicated for either Stage 1 or Stage 4, 12 pressure vessels dedicated for either Stage 1 of 3, and 8 pressure vessels dedicated for Stage 2. Each pressure vessel shall house 4 standard 4-inch diameter, 40-inch long membrane elements.

E. Flow Reversal shall take place between Stage 1, Stage 3 and Stage 4 Each pressure vessel shall act as a Block. Pressure vessels from the Stage 1 and shall rotate and reverse direction with pressure vessels from Stage 3. The same rotation shall occur with the Stage 4 pressure vessels. Stage 2 pressure vessels shall not be rotated though shall reverse flow direction on itself. All block rotation and flow reversals shall occur automatically.

F. Each stage shall have its own interstage booster pump (i.e., interstage pumps on feed to Stage 2, Stage 3, and Stage 4), which shall enable control of the feed flow at each stage. The final concentrate shall be manifolded and routed to a concentrate flow control valve and then to the common membrane concentrate waste header, which will discharge to plant drain as indicated on the drawings. The concentrate flow control valve shall interface with the RO System PLC to maintain recovery setpoint. The permeate from each stage is manifolded and routed to a common permeate header exiting the membrane system to the RO Flush Tank and downstream ultraviolet disinfection system.

G. The Flow Reversal RO System shall provide connections, valving and controls to perform automated permeate flushes from a common RO flush system. The connection for RO permeate flushes and CIP system shall be according to drawings. Flush water shall come from the RO Flush Tank via the RO Flush Pump, which shall be furnished and installed by the

Contractor. CIP solution will come from the CIP system from a CIP feed header, which shall be furnished and installed by the Contractor. Permanent connection must be used to connect the FRRO to the CIP feed header. CIP solution shall be returned to the CIP tank via the CIP Return Header. Permanent connection must be used to connect from the FRRO to the CIP return header. The Flow Reversal RO System PLC shall have ability to interface with RO CIP System and RO flush pump.

2.02 FLOW REVERSAL RO SYSTEM DESIGN CRITERIA

A. The Flow Reversal RO System shall use MBR treated wastewater further treated by ozone, biological activated carbon (BAC), and membrane filtration (MF) as feed water.

B. The Flow Reversal RO System shall be an integrated system of skid-mounted equipment.

C. The footprint and layout of the Flow Reversal RO System shall be no greater than the footprint indicated on the drawings and described in the Requirements under Article 1.02.

D. The membrane system shall meet the following design criteria. The skid shall be laid out as shown in the table below, and it shall be suitable for the range of operation defined in this table.

Parameter	**Value**
Permeate Capacity per Train, gpm	67.1
Pressure Vessel Array	8:4:2:1
Number of Elements per Stage ($1^{st}/2^{nd}/3^{rd}$)	7/7/7
Element Diameter, inches ($1^{st}/2^{nd}/3^{rd}$)	4/4/4
Average Train Flux Rate, gfd	12
Design Recovery per Train, percent	85 to 95
Feed Flow, gpm	70
Concentrate Flow, gpm	3.5 to 11.8

E. Major components for the Flow Reversal RO System shall include but are not limited to the following items:

1. RO transfer pump (shipped loose)
2. Cartridge filter
3. RO feed pump
4. Interstage booster pumps
5. RO pressure vessels
6. RO membrane elements (provided by Contractor)
7. System controls with user interface and data logging
8. Instrumentation
9. Skid frame

10. Chemical quills
11. Static mixers
12. Sample panel

F. The following components shall require interface with the Flow Reversal RO System but shall be provided by the Contractor:

1. RO CIP System (Section 40 63 24)
2. Chemical Systems (Section 46 07 10)
3. XLHDPE Tanks (Section 43 41 48)
4. Process Analyzer Measuring Systems (Section 40 91 12)

2.03 RO TRANSFER PUMP

A. A transfer pump shall be provided by FRROEM and provide sufficient head to pass through cartridge filter and provide sufficient head for downstream RO feed pump.

B. The transfer pump shall be fed by an atmospheric feed tank and provide at least 45 psi of developed head at 70 gpm.

C. The transfer pump shall be controlled by RO PLC with HMI and shall have ability to interface with RO feed tank to turn off when feed tank level is low.

D. The transfer pump shall be shipped loose. Installation and field wiring will be performed by Contractor.

2.04 CARTRIDGE FILTER

A. A cartridge filter shall be provided by the FRROEM for protection of the RO membranes. The cartridge filter element(s) shall have a nominal rating of 5 microns and shall be melt blown.

B. Filter housing design pressure shall be no less than 90 psi.

C. Cartridge filter loading rate shall not exceed 5 gallon per minute per 10 inch equivalent.

D. Filter housing material shall be high flow polypropylene (or equivalent).

E. Filter housing seals shall be Buna-N (or equivalent).

2.05 RO FEED PUMP

A. One RO feed pump shall be provided by the FRROEM. The RO feed pump shall be equipped with a variable frequency drive (VFD). The RO feed pump shall be skid mounted.

B. The RO feed pump shall provide sufficient head and flow to meet design criteria requirement across anticipated temperature range and water quality as noted herein. Furthermore, the pump shall provide sufficient head for end of life membranes using membrane filtered wastewater effluent fouling factors.

1. The feed pump shall provide at least 170 psi of developed head at 71 gpm.

C. The feed pump shall be stainless steel vertical multistage end suction pumps and rated for 460V, 3 phase.

D. The RO feed pump shall be skid mounted on Flow Reversal RO System and be controlled by RO PLC with HMI.

2.06 RO INTERSTAGE PUMPS

A. An interstage booster pump with VFD shall be provided to increase the feed pressure of each stage (i.e., second stage, third stage, and forth stage) and provide flux balancing.

1. Second stage interstage booster pump shall provide at least 50 psi of developed head at 30 gpm.

2. Third stage interstage booster pump shall provide at least 95 psi of developed head at 12 gpm.

3. Fourth stage interstage booster pump shall provide at least 135 psi of developed head at 6 gpm.

B. Each RO booster pump shall be provided by the FRROEM and shall provide sufficient head and flow to meet design criteria requirement across anticipated temperature range and water quality as noted herein.

C. Each interstage pump shall be at minimum stainless steel vertical multistage end suction pumps and rated for 460V, 3 phase. Duplex stainless steel shall be used for stage 3 and 4 to prevent chloride stress corrosion and chloride pitting corrosion.

D. Each interstage booster pump shall be skid mounted on Flow Reversal RO System and be controlled by RO PLC with HMI.

2.07 PRESSURE VESSELS

A. The FRROEM shall provide and skid mount pressure vessels to accommodate the vessel array per design criteria herein.

B. Vessels shall have a maximum working pressure of not less than 300 psi at a temperature up to 40 degrees Celsius. Each vessel shall be hydrostatically tested at the factory for 1.5 times the working pressure.

C. All pressure vessel seals shall be new, Viton or at minimum peroxide cured EPDM.

D. Manufacturers or equal:

1. Code Line Divisions, Structural North America

2. Progressive Composite Technologies, Inc. (ProTec)

3. ROPV

4. Bel

5. Or approved equal

2.08 ANTISCALANT ADDITION

A. The FRROEM shall include ability for antiscalant chemical addition to achieve an antiscalant dose between 0.1 and 3 mg/L using undiluted antiscalant product. The antiscalant chemical addition system supplied by FRROEM shall consist of a chemical quill, static mixer, and ability to interface with and control chemical dosing pump. Contractor shall provide chemical dosing pump, piping, and controls.

B. The Flow Reversal RO System shall allow the operator to set the antiscalant dose using the HMI, which shall be calculated based on flow.

C. The FRROEM and Contractor shall coordinate to run the appropriate piping with chemical containment and necessary control and electrical wiring to the Flow Reversal RO System, where the dosing point will be. The Contractor shall calibrate the pump for accurate dosing.

D. The antiscalant chemical dosing pump, containment, and tanks shall be according to Chemical Systems (Section 40 63 24).

E. The addition of antiscalant shall be added after sulfuric acid addition point and after the static mixer.

2.09 SULFURIC ACID CHEMICAL ADDITION

A. The FRROEM shall include ability for sulfuric acid chemical addition to achieve a sulfuric acid dose between 8 and 100 mg/L using 93% sulfuric acid. The sulfuric acid chemical addition system supplied by FRROEM shall consist of a chemical quill (compatible with 93% sulfuric acid), static mixer, and ability to interface with and control chemical dosing pump. Contractor shall provide chemical dosing pump, piping, and controls.

B. The Flow Reversal RO System shall allow the operator to set the sulfuric acid using the HMI, which shall be calculated based on flow.

C. The FRROEM and Contractor shall coordinate to run the appropriate piping with chemical containment and necessary control and electrical wiring to the Flow Reversal RO System, where the dosing point will be. The Contractor shall calibrate the pump for accurate dosing.

D. The sulfuric acid chemical dosing pump, containment, and tanks shall be according to Chemical Systems (Section 40 63 24).

E. The addition of sulfuric acid shall be before antiscalant addition point and before the RO static mixer.

2.10 AUTOMATIC PERMEATE FLUSHES

A. The FFRO skid shall interface with the RO Flush Pump to perform automatic permeate flushes upon system shutdown. Field wiring from RO skid to RO Flush Pump shall be by Contractor.

B. FRROEM shall provide necessary skid mounted and permanent piping and valving to perform automatic permeate flushes.

C. FRROEM shall provide controls to perform automatic permeate flushes by interfacing with RO Flush Pump.

2.11 CLEAN-IN-PLACE SYSTEM

A. The RO CIP shall be performed manually using a cleaning solution made up of powdered chemicals or chemicals in liquid form.

B. FRROEM shall provide ability for Flow Reversal RO System to interface with RO CIP System and provide necessary skid mounted valves to isolate Flow Reversal RO System from RO CIP System while Flow Reversal RO System is in production.

C. FRROEM shall provide necessary skid mounted and permanent piping and valving to perform CIP procedures on individual stages.

D. Flexible hosing shall be used to connect the RO CIP feed and return header to the Flow Reversal RO System (by CONTACTOR).

E. Contractor shall provide installation of skid mounted RO CIP System, including cleaning tank, circulating pumps, cartridge filters, heater, controls, instrumentation.

2.12 VALVES

A. The FRROEM shall furnish all membrane system valves, including motor-operated valves, hand-actuated butterfly valves, and check valves, in accordance with Section 40 05 60– Valves; Section 40 05 64– Butterfly Valves; and Section 40 05 65.30– Thermoplastic Check Valves.

B. The concentrate control valve shall be a flow control V-port ball valve with automated positioning to maintain recovery setpoint.

C. Motor operated valves shall be provided on the feed and concentrate to perform automated permeate RO flushes upon shutdown.

D. FRROEM shall provide necessary valving to perform CIP procedures on individual blocks/stages.

E. Valve seals shall be minimum EPDM. PTFE or Viton/FKM is also acceptable.

F. Pneumatic valves shall be used for block rotation. Pneumatic valves are acceptable in lieu of motor valves. Manufacturer shall be Genebre or approved equal.

2.13 PIPING

A. Piping shall meet the requirements of Section 40 05 01– Piping Systems and Section 40 05 06.16–Piping Connections.

B. Pipe material shall be as follows:

1. Feed piping up to the first stage booster pump shall be Schedule 80 PVC, fabricated in accordance with ASME B16.5 (or approved equal). Feed piping after the high pressure feed pump shall be 316L

stainless steel unless otherwise specified.

2. Permeate piping shall be Schedule 80 PVC in accordance with ASME standards.

3. Stage 3, stage 4, and concentrate piping from the header up to the concentrate control valve shall be duplex stainless steel. Concentrate piping after the concentrate control valve shall be Schedule 80 PVC, fabricated in accordance with ASTM D1748.
4. Any on-skid dedicated CIP and permeate flush piping shall be Schedule 80 PVC in accordance with ASME standards.

5. Feed manifolds shall be fabricated from 316L stainless steel). Concentrate manifolds shall be fabricated from duplex stainless stainless steel. Completed components shall behydrostatically tested prior to final assembly.

2.14 FLOW REVERSAL RO SYSTEM SKID

A. Flow Reversal RO System skid, pumps, pressure vessels, piping, pre-filter cartridge housings, and all other components shall be factory assembled on a skid and supporting structure constructed of corrosion resistant materials. The skid shall be installed on the equipment pad by the Contractor.

B. Flow Reversal RO System skid and supporting structure shall be one of the following:

1. Type 316 stainless steel (or equal).

2. Welded carbon steel, free of weld slag and finished with a baked, electrostatic powder or two-part epoxy coated material. Mounting hardware and fasteners shall be 316 stainless steel. The use of any material other than 316 SS must be approvedby the Engineer.

3. Fiberglass reinforced plastic (FRP) structural shapes complying with ASTM D-570 for water adsorption. Structural shapes shall be Extren 500 or equal. All joints shall be glued and or bolted/riveted for maximum strength.

C. Support structures must be free of pockets and niches that may not be coated initially and will present on-going maintenance problems for the Owner due to poor accessibility.

D. Skid Dimensions shall fit in the space available and shall not be greater than 17 L x 9’ W x 11.5’ H for the seven-element skid.

E. Skid shall be attached to a concrete pad with stainless steel anchors, with provisions for leveling the skid before grouting. Anchor bolts shall be

provided by FFROEM in accordance to Section 43 05 11 – General Requirements for Equipment.

2.15 SAMPLE PANEL

A. A sampling panel on the side of each train shall be provided to facilitate collecting samples from the following locations:

1. Train feed water.
2. Combined train product water (i.e., taken after stage 1, 2, 3, and stage 4 permeate have been blended).
3. Train total concentrate water (i.e., taken after the recovery control valve).
4. Combined stage 1 permeate.
5. Combined stage 2 permeate.
6. Combined stage 3 permeate.
7. Combined stage 4 permeate.
8. Permeate from the end of each pressure vessel.
9. Interstage between stages 1 and 2.
10. Interstage between stages 2 and 3.
11. Interstage between stages 3 and 4.

B. The sample panels should be installed so that the panel face can be easily removed to access sample tubing and wiring. Hardware shall be constructed of 316/316L stainless steel.

C. Drainage shall be provided for sample panels with drain troughs where required, specifically below the sample valves.

D. Labels shall be provided adjacent to each sample tap (black letters on white background).

2.16 INSTRUMENTATION AND CONTROLS

A. A minimum of the following instrumentation must be provided for the Flow Reversal RO System to allow smooth operation of the system:

1. ORP (mV) of RO feed water before addition of chemicals (by FRROEM)
2. Conductivity (µS) and pH on RO feed water after cartridge filter and after addition of chemicals (by FRROEM)
3. Feed pressure (psi) (gauge) after transfer pump and associated switches (by FRROEM)
4. Feed pressure (psi) (gauge) before and after cartridge filter and associated switches (by FRROEM)
5. Feed pressure (psi) (gauge and transmitter) before and after RO feed pump and associated switches (by FRROEM)
6. Feed pressure (psi) (gauge and transmitter) after each interstage booter pump and associated switches (by FRROEM)
7. Concentrate pressure (psi) (gauge and transmitter) of each stage and associated switches (by FRROEM)
8. Permeate pressure (psi) (gauge) of each stage (by FRROEM)
9. Conductivity (µS or mS) of each stage concentrate and permeate

(by FRROEM)

10. Magnetic flow meters will be used for Stage 1 feed and final reject lines. Additional flow meters will be used for the permeate of each block in order to analyze block hydraulics and flux distribution. All flow meters are installed by FRROEM.
11. Conductivity of the combined RO permeate (combined from Stages 1, 2, 3 and 4) (by FRROEM)
12. Dual-stream online TOC analyzer that measures TOC of combined permeate from Flow Reversal RO System on one stream and combined permeate from a different RO System for the other stream (by Contractor).
13. Multi-stream online strontium analyzer that measures strontium of combined permeate from the Flow Reversal RO System (by Contractor)

B. All instruments shall be provided by the FRROEM unless indicated otherwise. Installation shall be skid mounted unless indicated otherwise. Instruments shall monitor parameters as shown on the Contract Drawings.

1. The equipment shall include all instrumentation related to the Flow Reversal RO System as identified in the specifications, as shown on the drawings, and as necessary to measure and display the process parameters described herein. See Related Specification Sections for additional information. The FRROEM shall coordinate with the Contractor on the specific requirements for communication to the Plant SCADA Control System.
2. Instruments shall be selected by the FRROEM for an appropriate range given where they are installed in the system. Flow meters selected to monitor permeate flows shall achieve the required accuracy on a low-TDS, low-conductivity stream.

C. Skid Instrument Panel and Local Gauges:

1. FRROEM shall furnish a Skid Instrument Panel for the Flow Reversal RO System skid. Each instrument installed on a skid by the FRROEM shall have a display and/or transmitter remote-mounted to the Instrument Panel.

2. All power and instrument cables shall be terminated at the Skid Instrument Panel located on the Flow Reversal RO System skid. PLC input signals related to skid instrumentation shall be distributed from the Skid Instrument Panel to the Plant Control System as shown on the Contract Drawings. Access to Skid Instrument Panels shall be located on each skid so they can be easily accessed, without obstruction from other equipment for ease of operation.

D. RO Control Panels

1. The Flow Reversal RO System will be controlled by a dedicated FRROEM provided PLC which shall be linked to the Plant SCADA Control System as shown on the drawings for integration of the

system with the overall facility. Requirements for Flow Reversal RO System instrumentation, local panels, PLC programming and the interface between the Flow Reversal RO System skids andthe Plant SCADA System are discussed in Section 40 61 13– PROCESS CONTROL SYSTEM GENERAL PROVISIONS and Section 40 93 00 – PLANT CONTROL PHILOSOPHY.

2. The Flow Reversal RO System skid control panels shall be NEMA 4X stainless steel enclosures.
3. Integration between the Flow Reversal RO System skid PLC and the Plant SCADA Control System shall be completed by the Contractor.

E. Data Display and Normalization:

1. The following process variables, as minimum, shall be displayed on the face of the RO membrane HMI skid control panel.
   a. RO feed pH, ORP, conductivity, and temperature.
   b. RO permeate conductivity.
   c. RO membrane feedwater pressure (measured at the Stage 1 inlet manifold).
   d. RO membrane interstage pressures (measured at the inlet and outlet of interstage pumps of Stage 1 and Stage 2).
   e. RO membrane final concentrate outlet pressure (measured at the manifold upstream of the concentrate control valve).
   f. RO permeate pressure (measured at common permeate manifold).
   g. Total feed water flow to the skid as well as permeate and concentrate water flow from the skid.
   h. Measured permeate water flow and calculated permeate flux at each stage and from the skid overall.
2. The Flow Reversal RO System PLC shall calculate and log normalized data for each stage and overall FRRO system. Normalized permeate flow, normalized salt passage, and normalized conductivity shall be calculated and logged by the SCADA system for each RO skid. Normalized differential pressure shall be calculated and logged by the SCADA system for each stage of each RO skid. The FRROEM shall program the Flow Reversal RO System PLC to normalize data using the equations presented in ASTM D-4516.

2.17 SPARE PARTS AND SPECIAL TOOLS

A. General: Special tools and spare parts shall be furnished by the manufacturer of the respective equipment item. Spare parts shall be suitable packages labeled with respect to their contents and delivered to Owner. Indicated quantities below do not include installed items or items

consumed by the Contractor.

B. Spare Parts

1. Three (3) brine seals for use with the membrane elements and ten (10) O-rings or other type of seals for element permeate tube interconnectors.
2. Spare components for pressure vessels, including:
   a. Two (2) product water tube (PWT) adaptor seals
   b. Two (2) PWT adaptors with seals
   c. Two (2) head seals
   d. Two (2) sets of head retaining rings (with fasteners)
   e. Two (2) PWT shims
   f. One (1) complete head assemblies
   g. One (1) complete set of cartridge filters for each Flow Reversal RO System
3. All provided spare seals shall be new, Viton or at minimum peroxide cured EPDM.

C. Special Tools

1. One head retainer ring pliers or other tools required for vessel head removal.

PART 3 – EXECUTION

3.01 INSTALLATION OF REVERSE OSMOSIS SYSTEM SKIDS AND MEMBRANE ELEMENTS

A. All installation of Flow Reversal RO System skids shall be by the Contractor under supervision of the FRROEM unless otherwise noted.

B. Pressure vessels shall be shop installed by the FRROEM in conformance with the vessel manufacturer's recommended procedures, instructions, and the Shop Drawings. Manifolds and vessel supports shall be adjusted to achieve the indicated port coupling alignments.

C. Installation of membrane elements into FRRO skid shall be by Contractor under supervision of FRROEM. The position of each element shall be recorded by element serial number by Contractor. If the Membrane Element Manufacturer has specified a loading order based on element type or test data, the elements shall be installed in that order.

3.02 STARTUP AND TRAINING

A. The FRROEM shall provide factory functional testing, pre-commissioning testing, andcommissioning testing. The purpose of the pre-commissioning testing, which is tolast no longer than 30 days, is to permit the FRROEM to ensure the Flow Reversal RO System is operating properly before the commissioning test. The commissioning test is intended to confirm the Flow

Reversal RO System can perform within the specifications during normal operation.

B. The FRROEM is responsible for providing a qualified representative to perform these tasks and shall coordinate these activities with relevant parties. Permeate produced during startup and commissioning shall be disposed of per the Owner or Owner's agent requirements.

C. Pre-commissioning testing: Pre-commissioning is the systematic demonstration through testing and extended operation that major equipment and ancillary systems, including related components, sub-systems, and systems operate properly and consistent with their intended function. Pre-commissioning involves balancing, adjustments, calibration, loop checks, and loop validation. Pre- commissioning shall simulate shutdown conditions, failure conditions, power fail and restart, bypass conditions, and failure resets. The FRROEM shall submit a proposed test protocol for the commissioning test to the Owner or Owner's agent,who must approve the test plan before the Flow Reversal RO System supplier can begin the commissioning test. The Owner or Owner's agent approval is required for the completion of pre-commissioning. Pre-commissioning shall be completed prior to the 30-day initial operation period described in Section 01 91 13 and 01 91 14.

D. Performance testing during commissioning: The commissioning test shall demonstrate the membrane system is satisfying operational and maintenance requirements. The FRROEM shall submit a proposed test protocol for the commissioning test to the Owner or Owner's agent, who must approve the test plan before the FRROEM can begin the commissioning test. The commissioning test will consist of the following elements:

1. The Flow Reversal RO System supplier will perform tests to confirm all equipment is functioning properly during the entire commissioning test.

2. Testing will confirm the Flow Reversal RO System is properly installed, operational, capable of completing operating cycles free of problems, and free from pump or valve cavitation, overheating, overloading, vibration or other operating problems.

3. The commissioning test will be completed when the Flow Reversal RO System has met the following performance requirements concurrently for a continuous period of operation of 168 hours:

   a. The Flow Reversal RO System shall continuously produce permeate that meets the production requirements at the design recovery.

   b. All components and support systems of the Flow Reversal RO System shall continuously function as required.

   c. Any failure to meet these requirements or malfunction of equipment supplied by the Flow Reversal RO System shall require a complete repeat of the commissioning test at no

additional expense to the Owner.

d. The FRROEM shall submit a report summarizing the results of the commission test to the Owner or Owner's agent. Acceptance of this report will signify the completion of the commission test and the acceptance of the Flow Reversal RO System.

E. Training: A thorough training by a qualified representative shall be provided for 3 business days at the project site. Training shall include detailed written protocols for performing Clean-in-place procedures on FRRO system. Follow-up training, technical support and system troubleshooting shall include two site visits of a minimum of 2 business days each. Training shall occur during the 7-day initial operation period as described in Section 01 91 13 and 01 91 14.

END OF SECTION

SECTION 46 63 23.04
REVERSE OSMOSIS MEMBRANE

PART 1 - GENERAL

1.01 BACKGROUND

A. The purpose of this section of the specifications is to specify the requirements for the reverse osmosis (RO) membranes to be used at the CASSF.

B. The advanced water treatment at the CASSF will consist of two parallel treatment trains (Murray Treatment Train and San Vicente (SV) Treatment Train).

C. The influent to the Murray RO systems shall be membrane bioreactor (MBR)-treated wastewater further treated by ozone, biological activated carbon (BAC), and membrane filtration (MF).

D. The Murray train will have three (3) independent RO systems:

1. One 3-stage conventional RO system with interstage boosting (2:1:1 array with 4-inch membranes in Stage 1 and 2 housing 7 membranes, and 2.5-inch membranes in Stage 3 housing 7 membranes plus 1 additional canary element),
2. One closed circuit RO (CCRO) system (single 8-inch pressure vessel housing 3 membranes)
3. One 4-stage flow reversal RO (FRRO) system (8:4:2:1 array with 4-inch membranes, each vessel housing 4 membranes)

E. The influent to the SV RO system shall be MBR-treated wastewater <u>or</u> MBR-treated wastewater further treated by ozone and BAC.

F. The San Vicente train will have one conventional RO system (2:1:1 array with 4-inch membranes in Stage 1 and 2 housing 7 membranes, and 2.5-inch membranes in Stage 3 housing 7 membranes plus 1 additional canary element),

G. Each RO system is intended to operate at up to 95% recovery.

H. Sulfuric acid 93% will be used for pH suppression of RO feed water to each RO system, with an available range of 8 and 100 mg/L. Antiscalant will be used undiluted with an available dose range dose between 0.1 and 3 mg/L.

I. The membrane elements shall be operated under typical conditions for treatment of water of wastewater origin. This includes a target chloramine residual of 1.5 to 2.5 mg/L at 95% of the time through the RO system to control biofouling, although the City reserves the right to have the chloramine residual in the 2.5 mg/L to 5 mg/L range up to 5% of the time. The membrane element warranty shall be valid under these conditions.

J. Projected RO Feed Water Quality.

Parameter	Units	90th Percentile Values	
		Murray Influent[a]	SV influent[b]
Iron	µg/L	<50	<50
Manganese	µg/L	<5	<30
Total Organic Carbon	mg/L	<7	<10
Raw pH	--	7.0	
Feed conductivity	µS/cm	3,388	
Calcium	mg/L	101	
Magnesium	mg/L	67	
Barium	µg/L	118	
Strontium	µg/L	1,015	
Sodium	mg/L	489	
Potassium	mg/L	35.6	
Aluminum	µg/L	45	
Ammonia	mg/L-N	<1	
Alkalinity	mg/L $CaCO_3$	100	
Orthophosphate	mg/L-P	1.0	
Sulfate	mg/L	234	
Fluoride	mg/L	1.3	
Chloride	mg/L	699	
Bromide	mg/L	2.04	
Silica	mg/L	5.7	
Nitrate	mg/L-N	19.0	
Nitrite	mg/L-N	<0.3	
Boron	µg/L	481	
Total Dissolved Solids	mg/L	2,026	
Temperature (min – max)	°C	19 – 29	

a – refers to feed water quality for Murray trains (Murray Conventional RO, CCRO, FRRO)
b – refers to feed water for San Vicente trains (San Vicente Conventional RO)

1.02 MEMBRANE ELEMENT MANUFACTURER

A. Acceptable Membrane Element Manufacturers are listed below:

1. Hydranautics, A Nitto Group Company
2. DuPont
3. Toray
4. LG Chem
5. Or approved equal

1.03 REFERENCE INSTALLATIONS

A. To be eligible, the Membrane Element Manufacturer shall have similar membrane element models to the one proposed that have been operating at a California municipal water reclamation or potable reuse facility without warranty issues. Owner reserves the right to contact each of the facilities provided for reference. If the facility is deemed not applicable, the reference will not be considered as valid.

B. To be eligible, the Membrane Element Manufacturer shall have had the proposed membrane element model for this project used at similar

municipal potable reuse facilities in CA and in the USA.

1.04 SUBMITTALS

A. Membrane Element Manufacturer shall provide the following:
   1. Technical data sheet for the membrane model(s) to be supplied.
   2. Standard operating and maintenance data and instruction sheets for the membrane elements, covering such topics as recommended cleaning solutions as well as long and short-term storage protocols.
   3. Signed and certified wet test data for each element furnished as specified herein. The test data shall be submitted at least 14 days prior to shipment of the membrane elements for approval of Owner or its representatives. Wet test data shall describe the operating conditions used.

1.05 RO MEMBRANE ELEMENT WARRANTY

A. The Membrane Element Manufacturer shall supply the Owner with a membrane element warranty that warrants the membrane elements to be free of liens and encumbrances, and against defects in materials or workmanship for a period of twelve (12) months. If any membrane elements should fail due to a defect in material or workmanship during the warranty period, the element shall be either repaired or replaced at no cost to the Owner within seven (7) calendar days. The warranty period shall commence on upon successful completion of the installation of all of the new membranes.

B. The Membrane Element Manufacturer shall also warrant the performance of the membrane elements for a period of three (3) years from completion of the installation of all of the new membrane elements, in accordance to the following criteria.

   1. The elements shall maintain at all times during the three (3) year period permeate output of at least sixty percent (60%) of the minimum specification sheet flow when tested at conditions specified in the membrane element Specification Sheets
   2. During the same three (3) year period, the salt passage shall not exceed three (3) times the maximum salt passage as determined during factory wet testing and accepted by Owner.

C. The membrane element warranted performance specified herein shall be valid under the following conditions:

   1. The RO systems have been operated as designed in terms of product water recovery, array configuration, pH of feed water, and feedwater quality specified herein.
   2. The feed water has not contained chemicals that chemically or physically destroy the elements. For the purpose of this condition, chloramines in concentrations of 5 mg/L or less are not considered damaging to RO elements.
   3. The membrane elements are periodically cleaned with an effective

cleaning solution to remove scale-buildup and organic and inorganic foulants.
4. The membrane elements are cleaned using standard cleaning solutions prior to performance testing for warranty purposes.
5. The membrane elements have not been irreversibly fouled by biological matter, inorganic constituents, or organic matter present in the feed water or by inorganic scaling of the membrane surface.

D. Should the membrane elements fail to meet the performance criteria described herein, the membrane element manufacturer shall replace the elements at the price per element specified in the quote, less a credit of 1/36 of the purchase price for each unused month of the warranty period.

1.06 RELATED SECTIONS

A. Section 46 63 23.01 - CONVENTIONAL REVERSE OSMOSIS SYSTEMS

B. Section 46 63 23.02 - CLOSED CIRCUIT REVERSE OSMOSIS SYSTEM

C. Section 46 63 23.03 - FLOW REVERSAL REVERSE OSMOSIS SYSTEM

PART 2 - PRODUCTS

2.01 MEMBRANE ELEMENT SUPPLIED COUNT

A. The following amount of membrane elements shall be supplied:
1. 8-inch diameter membranes elements: 3
2. 4-inch diameter membranes elements: 133
3. 2.5-inch diameter membranes elements: 16

B. Membrane manufacturer and model number must be same for all elements provided.

2.02 MEMBRANE ELEMENT CONSTRUCTION

A. The membrane type shall be thin-film composite.

B. The membrane material shall be polyamide.

C. The membrane element configuration shall be spiral-wound with fiberglass reinforced plastic wrapping.

D. All membranes provided shall be of the same manufacturer and model type.

E. Membrane area shall be as follows:
1. For 8-inch diameter elements, the effective membrane area shall be 400 sq ft.
2. For 4-inch diameter elements, the effective membrane area shall be no more than 87 sq ft and no less than 78 sq ft.
3. For 2.5-inch diameter elements, the effective membrane area shall be no more than 27 sq ft and no less than 20 sq ft.

F. The average permeate flow of the membrane elements submitted shall have a minimum of:
1. For 8-inch diameter elements, the average minimum permeate flow shall be 10,000 gallons per day.

2. For 4-inch diameter elements, the average minimum permeate flow shall be 2,000 gallons per day.
3. For 2.5-inch diameter elements, the average minimum permeate flow shall be 750 gallons per day.

G. Membrane feed spacer thickness:
1. For 8-inch diameter elements, the feed spacer thickness shall be 34 mil.
2. For 4-inch diameter elements, the feed spacer thickness shall be 34 mil.
3. For 2.5-inch diameter elements, the feed spacer thickness shall be 34 mil.

H. All membranes provided shall be 40 inches in length.

I. The minimum specified salt rejection of all membranes shall be no less than 99.2%

J. Membranes shall be for brackish water applications, offering high rejection and low energy.

2.03 SEALS

A. Each applicable elements shall be furnished complete with one element-to-element internal interconnector (1 per element), interconnector o-rings (4 per element), and brine seal (1 per element). All interconnector o-rings must be made of Viton. Ethylene propylene diene (EPDM) is not acceptable. Brine seals and interconnectors can be supplied using standard materials.

PART 3 - EXECUTION

3.01 INSTALLATION OF MEMBRANE ELEMENTS

A. Contractor will perform installation of membrane elements under the supervision from respective representatives for each RO system supplier.

B. Membrane Element Manufacturer is not required to be present for installation.

3.02 STARTUP

A. Once membranes are installed, each RO system shall be started in accordance with recommendations from the Membrane Element Manufacturer.

B. The Contractor is responsible for providing a qualified representative to perform startup in accordance with the recommendations provided by Membrane Element Manufacturer.

END OF SECTION

THIS PAGE INTENTIONALLY LEFT BLANK

SECTION 46 63 24
RO CIP SYSTEM

PART 1 - GENERAL

1.01 BACKGROUND

A. The purpose of this section of the specifications is to specify the requirements for the Reverse Osmosis (RO) Clean-in-place (CIP) system at the CASSF.

B. The RO CIP system will be shared for all of the RO systems used at CASSF. Only one RO skid will be cleaned at a time. Cleaning consists of making a batched chemical solution and alternating between soaks and recirculating the chemical solution through the RO system.

C. The RO CIP system shall consist of CIP tank, immersion heater, CIP pump, connections for citric acid and sodium hydroxide to recirculation line leading to CIP tank, cartridge filter, associated piping and controls.

D. The RO CIP tank will be filled with RO permeate using a CIP fill pump from the RO flush tank.

E. The RO CIP system shall have permanent connections to the flow reversal RO system, and quick connect connections for other RO systems to be connected when in use.

F. The Contractor is responsible for the equipment and services to be provided under this Section,

1.02 REQUIREMENTS

A. The RO CIP system must be positioned to maintain a minimum of 4 feet of buffer from the edge of the elevated concrete equipment pad (per the Drawings).

B. All RO CIP system piping shall be supplied by the Contractor.

C. All mounting and anchoring hardware shall be supplied by the Contractor.

D. The RO CIP system equipment, piping, and mounting hardware shall be designed for outdoor use.

1.03 SUBMITTALS

A. The Contractor shall submit a Pre-Commissioning Testing Plan and Performance Testing Plan for approval by the Owner and/or OA.

1.04 RELATED SECTIONS

A. Section 40 91 12 - Process Analyzer Measuring Systems

B. Section 40 93 00 - Plant Control Philosophy

C. Section 43 41 48 - Polyethylene Tanks

D. Section 46 07 10 - Chemical Systems

E. Section 46 63 23.01 - Conventional Reverse Osmosis Systems

F. Section 46 63 23.02 - Closed Circuit Reverse Osmosis System

G. Section 46 63 23.03 - Flow Reversal Reverse Osmosis System

PART 2 - PRODUCTS

2.01 MINIMUM DESIGN CRITERIA

A. Components of the RO CIP system includes but are not limited to the following:

1. CIP pump with variable frequency drive (VFD) able to pump 100 gallons per minute (gpm) at a developed head of 100 feet. The pump shall have associated flow and pressure switches.
2. Immersion heater connected to CIP tank at a fill level of 100 gallons. The heater shall be able to heat to 500 gallons of water from 77 Fahrenheit to 105 Fahrenheit within four (4) hours. Immersion heater shall have internal temperature switch that shutoffs power to the heater upon reaching a high temperature set point.
3. 5-micron cartridge filter dedicated to RO CIP system able to process 100 gallons of flow at a developed head of 100 ft. Associated pressure indicators on cartridge filters shall be provided to allow reading of differential pressure across cartridge filters.
4. CIP tank able to store 500 gallons of chemical solution at a diameter not to exceed 4 feet and height not to exceed6 feet. The tank shall have overflow, drain, level indicator/transmitter and level switch as shown in drawings.
5. RO CIP system local control panel able to provide local and remote controls that interfaces RO CIP pump and associated instrumentation.
6. Chemical addition of 50% citric acid and 25% sodium hydroxide to RO CIP tank recirculation line as shown on Drawings.
7. Connections for RO systems as shown in drawings. Connections to RO systems shall be for CIP feed, CIP concentrate return and CIP permeate return.
8. Flexible PVC hoses shall be provided for to connect RO systems for temporary use of RO CIP systems.
9. Local control for RO CIP system shall be NEMA Type 4X, rated for outdoor use.
10. Magnetic flow meter on discharge of RO CIP pump as shown in drawings. Flow meter shall have a range between 5 gpm and 100 gpm.
11. All materials provided shall be compatible with 2% (w/w) citric acid and 0.1% (w/w) sodium hydroxide).

B. The following components (not furnished by the Contractor) shall require interface with the RO CIP System:

1. Master PLC system (Specification Section 40 63 43)
2. Section 46 07 10 - Chemical Systems
3. Section 46 63 23.01 - Conventional Reverse Osmosis Systems
4. Section 46 63 23.02 - Closed Circuit Reverse Osmosis System
5. Section 46 63 23.03 - Flow Reversal Reverse Osmosis System

2.02 INTERCONNECTING PIPING

A. The Contractor shall supply and install all interconnecting piping to the RO CIP System (per the Drawings) including:

1. Connections to individual RO systems
2. Connections between CIP pump and CIP tank, as well as dedicated line for CIP solution recirculation.
3. Addition of sodium hydroxide (25%) and citric acid (50%) to RO CIP recirculation line.
4. RO CIP Tank connections to drains and overfill.
5. All equipment listed in this section shall conform to the specifications listed in Section 40 05 01 and Section 40 05 06.16.

2.03 INSTRUMENTATION AND CONTROL

A. The Contractor shall be responsible for installing and integrating this equipment into the RO CIP system, including:

1. Immersion heater on RO CIP tank
2. Level switch on RO CIP tank
3. Level transmitter on RO CIP tank
4. Thermal switch on discharge of RO CIP pump
5. Pressure switch on discharge of RO CIP pump
6. Magnetic flow meter on discharge of RO CIP pump
7. Pressure indicator before and after RO CIP cartridge filter

PART 3 - EXECUTION

3.01 INSTALLATION, STARTUP, COMMISSIONING, TRAINING, AND OPERATIONS SUPPORT

A. Installation

1. All RO CIP System materials described in this section shall be installed by the Contractor.
2. All equipment shall be mounted and installed according to the seismic and anchoring specifications listed in Section 01 88 15.

B. Pre-commissioning Testing

1. The Contractor shall provide pre-commissioning testing.
2. The purpose of the pre-commissioning testing is to ensure, through testing and extended operation, that the RO CIP system (including ancillary systems and related components) is operating properly and consistent with their intended function before the Performance Test.

3. The Contractor shall submit a Pre-Commissioning Test Plan to the Owner/OA for approval before testing can commence.
4. Pre-commissioning Testing should last no longer than 30 days.

C. Performance Test During Commissioning

1. The Contractor shall provide Performance Testing.
2. The Performance Test is intended to confirm the RO CIP system meets the performance criteria.
3. The Contractor shall submit a Performance Test Plan to the Owner/OA for approval before testing can commence.
4. The Performance Test shall include, but not be limited to, the verification of the following:
   a. Functioning of chemical delivery to RO CIP system
   b. Recirculation of RO CIP solution from RO CIP tank to respective RO systems
   c. Functioning of RO CIP heater
   d. Operator of both local and remote controls for RO CIP system
   e. Alarms and system response to alarm conditions
5. The Contractor shall submit a report summarizing the results of the Performance Test to the Owner or OA. Acceptance of this report will signify the completion of the commission test and the acceptance of the RO CIP system.

END OF SECTION

SECTION 46 66 13
ULTRAVIOLET/ADVANCED OXIDATION PROCESS

PART 1 - GENERAL

1.01 BACKGROUND

A. This specification details the minimum requirements for the design, supply, supervision of installation, commissioning, testing, and performance requirements of an ultraviolet light/advanced oxidation process (UV/AOP) system.

B. The purpose of the UV/AOP treatment is to provide disinfection of virus, *Giardia*, and *Cryptosporidium* and remove organics from the water via advanced oxidation and photolysis.

C. The Pure Water Facility (PWF) portion of the CASSF will consist of two parallel treatment trains (Murray Treatment Train and San Vicente (SV) Treatment Train), each with its dedicated UV/AOP treatment.

D. The influent to the Murray UV/AOP system shall be membrane bioreactor (MBR)-treated wastewater further treated by ozone, biological activated carbon (BAC), membrane filtration (MF) and reverse osmosis (RO).

E. The influent to the San Vicente (SV) UV/AOP system shall be MBR-treated wastewater further treated by RO.

F. The influent to the Murray UV/AOP and SV UV/AOP systems shall be fed directly from the corresponding RO permeate header (i.e., not from a permeate storage tank) to minimize dichloramine formation in the low-pH environment of RO permeate.

G. Chlorine (as sodium hypochlorite (SHC)) shall be used as oxidant. SHC will be dosed into the UV/AOP influent line static mixer.

H. UV Feed Water Quality. The feed water entering the Murray and SV UV/AOP systems will be RO permeate with the characteristics listed below (with added chlorine). This list is not comprehensive of all constituents in the water and shall be used for UV system sizing purposes only and not as a reference of system performance.

Parameter	Units	Value or Range in Murray UV/AOP Influent	Value or Range in SV UV/AOP influent
Alkalinity	mg/L $CaCO_3$	<10	<10
TDS	mg/L	≤60	≤60
pH	pH units	<6.0	<6.0
Chloramine	mg/L Cl_2	0.75 – 2.25	0.75 – 2.25
1,4 dioxane	µg/L	≤3	≤3
NDMA	ng/L	19	190
UVT	%	≥96	≥96
Temperature	°C	15-30	15-30
Ammonia	mg-N/L [(a)]	≤ 0.3	≤ 0.3
Nitrite	mg-N/L	<0.05	<0.05
Nitrate	mg-N/L	<3	<3

Parameter	Units	Value or Range in Murray UV/AOP Influent	Value or Range in SV UV/AOP influent
Total Organic Carbon (TOC)	mg/L	≤0.1	≤0.25

(a) Not accounting for chloramines

I. The Owner/OA will conduct chemical challenge tests at the CASSF after startup and commissioning to assess the UV/AOP system's ability to reduce concentrations of 1,4-dioxane and NDMA.

1.02 REQUIREMENTS

A. Each of the two parallel treatment trains at CASSF (Murray and SV) shall have its dedicated UV/AOP treatment, hereinafter referred to as UV/AOP system. The UV/AOP system includes, but is not limited to, UV reactors, UV reactor supports, lamps, intensity sensors, electrical cabinets, ballasts, cables, and instrumentation as specified herein.

B. The UV Equipment Manufacturer (UVEM) shall be deemed to have used its judgement as an expert in the field and shall include any associated items not mentioned specifically within this specification which are necessary to provide an UV/AOP system that is complete and meets the requirements of this Section.

C. As part of the overall project, the Contractor shall provide a complete and operable system, with responsibilities for the Contractor and UVEM as described herein.

D. The UVEM shall provide the UV/AOP systems for the Murray and SV treatment trains. A single UVEM shall provide both UV/AOP systems and the services specified herein.

E. The UV/AOP system shall be manufactured by the UVEMs listed in Article 1.03.

F. All the equipment provided by the UVEM shall be skid-mounted on a single skid per treatment train. A single skid housing the UV/AOP systems for both the Murray and SV treatment trains is also acceptable (but each system shall have its separate control system and monitoring instrumentation as specified in PART 2). The relative location of the components in the skid/s shall be such that one train is a mirrored image of the other, with the reactors in front of each other and the controllers facing outward (refer to Contract Drawings)

G. UVEM equipment shall be furnished and installed complete with all anchors and supports, all mechanical equipment and instrumentation required for proper operation, and all additional materials or construction required by the manufacturer's design.

H. UV/AOP System equipment shall be installed, placed, and anchored in proper operating condition by the Contractor in full conformity with the drawings, specifications, engineering data, instructions, and recommendations of the UVEM unless exceptions are proposed by the Contractor and accepted by the Engineer. The specified information does not relieve the Contractor of the responsibility to provide a fully operable system.

I. The UV/AOP system shall use low-pressure, high-output (LPHO) UV lamps.

J. The UV/AOP system shall have variable-output lamp drives (≤50%-100% power).

K. All UV/AOP system skid piping shall be supplied by the UVEM.

L. The UV/AOP system equipment, piping, and skid frames shall be designed for outdoor use. All electrical and control panel enclosures shall be NEMA Type 4X and shall be provided with appropriate fan cooling to accommodate the anticipated humidity and temperature range at the location (45 – 90F and relative humidity up to 100%)

M. Power shall be supplied to the UV/AOP system by the Contractor. Power shall be supplied at either 120/240 V, 1-phase, 60 Hz or 480V, 3-phase, 60 Hz.

N. The UV/AOP system shall be furnished with sample tabs in the influent and effluent of the UV reactor.

O. The UV/AOP system shall be furnished with isolation valves in the influent and effluent of the reactor.

P. The chemical feed system for SHC and for chemicals used for challenge testing shall be provided by the Contractor.

Q. The Contractor shall supply static mixers to be installed upstream of the UV reactor.

R. The Contractor shall be responsible for field-routing the sample line to the total chlorine analyzer before SHC addition.

S. For each treatment train, all UV/AOP system equipment, piping and skid frames shall fit in a footprint measuring up to 13 feet 6 inches by 4 feet with a maximum height of 11.5 feet. If additional clearance is needed for the removal of UV components (e.g., lamps), the UV reactor may be positioned to utilize the open space surrounding the UV system area (see Contract Drawings). The UV system must be positioned so as not to obstruct the removal of membrane elements from the adjacent RO system.

T. Each UV/AOP system shall have its dedicated Programable Logic Controller (PLC) and operator interface terminal (OIT).

U. The UV/AOP system must trigger a built-in automated alarm if the system is below the minimum UV dose or minimum UVT of 96%.

V. The UV/AOP system shall alarm and shut down on the following conditions: intensity monitor failure, reactor failure, single lamp failure, and ballast high temperature.

1.03 UV SYSTEM SUPPLIERS

A. Acceptable UV system suppliers are listed below:

1. Xylem Wedeco
2. Trojan Technologies
3. Or approved equal

1.04 SUBMITTALS

A. The UVEM shall provide the following documents and drawings at time of bid at a 90% design level:

1. General Arrangement Drawing(s)
2. Mechanical Drawings
3. Process and Instrumentation Diagrams
4. UV/AOP System Control Philosophy

5. Training Materials

B. The UVEM shall provide details about support services included in bid, such as installation supervision, startup and testing support, and operator training. Details shall also be provided for the UVEM's per diem rates and costs per round trip, and cost of optional support services that might be necessary in addition to those support services that are included in the bid.

C. The UVEM shall provide a detailed scope of supply.

D. The UVEM shall provide warranty terms and conditions for the supplied equipment

E. The UVEM shall provide operation and maintenance manuals for the system before or at time of system installation.

F. The UVEM shall, in coordination with the Contractor, submit a Factory Acceptance Test plan, Functional Testing Plan, and Performance Test Plan for approval by the Owner and/or (OA).

1.05 RELATED SECTIONS

A. Section 01 88 15 - ANCHORAGE AND BRACING

B. Section 01 91 13 - GENERAL COMMISSIONING REQUIREMENTS

C. Section 01 91 14 - TESTING AND STARTUP

D. Section 40 91 12 - PROCESS ANALYZER MEASURING SYSTEMS

E. Section 40 93 00 - PLANT CONTROL PHILOSOPHY

F. Section 40 95 10 - PLC-BASED CONTROL SYSTEMS HARDWARE

G. Section 40 95 20 - PLC-BASED CONTROL SYSTEMS SOFTWARE

H. Section 43 05 11 - GENERAL REQUIREMENTS FOR EQUIPMENT

I. Section 46 07 10 - CHEMICAL SYSTEMS

PART 2 - PRODUCTS

2.01 MINIMUM DESIGN CRITERIA

A. UVEM-provided components of the UV/AOP system include, but are not limited to, the following:

1. Skid frame
2. UV AOP reactor (one reactor per train)
3. LPHO UV lamps
4. Lamp sleeves
5. Ballasts
6. Power distribution center
7. UV intensity monitoring system
8. Reactor temperature sensor

9. UV/AOP system PLC and OIT
10. Air relief vents
11. Drain port(s)
12. Water level probe
13. Reference sensors
14. Reactor isolation valves
15. Standard spare parts and safety equipment
16. Isolation or step-down transformer, if needed
17. Instrumentation (Article 2.11)

18. Influent flow meter

B. Design and Performance requirements

1. To allow direct and consistent comparison between the Murray and San Vicente UV systems, the UV reactor shall be the same for both treatment trains.
2. The UV reactor shall achieve a maximum UV dose of 2,000 mJ/cm2 at the design flow and 96% UVT. The UV reactor shall meet the following design and performance criteria:

Parameter	**Units**	**Value or Range in Murray UV AOP Influent**	**Value or Range in SV UV AOP Influent**
Design flowrate	gpm	15	15
Type of UV System	--	LPHO	LPHO
Maximum UV Dose (at design flow and 96% UVT)	mJ/cm^2	2,000	2,000
UV Reactors	No.	1	1
Number of lamps per reactor	No.	≥2	≥2
Oxidant	--	HOCl	HOCl
Oxidant dose	mg/L Cl_2	1 to 3	1 to 3
Minimum influent UVT	%	96	96

2.02 UV REACTOR

A. The UVEM shall determine the UV reactor design and arrangement and orientation of UV lamps.

B. The UV/AOP system must operate in a closed vessel. All interconnecting cabling between the UV reactor and control/power panel shall be provided by the UVEM and assembled at the factory.

C. UV/AOP system design shall be such that when installed and operated according to manufacturer's instructions, there is no possibility of direct operator exposure to UV light from the UV lamps.

2.03 LAMPS

A. The lamps shall be low-pressure high output amalgam UV lamps.

B. Each lamp shall produce UV light with at least 95% of the emission within the wavelength of 253.7 ± nm.

C. The lamps shall be rated to produce no ozone.

D. Lamps shall be suitable for operation at variable power outputs.

E. The electrodes of the lamps shall be designed to withstand shock and vibration.

F. The lamp bases shall be of a construction resistant to UV light and temperature caused by lamp operation.

G. Design shall be such that plant operators shall be able to easily access the lamps and replace or check them without removing the lamp sleeve or draining the unit.

2.04 UV LAMP SLEEVES

A. UV lamp sleeves shall be provided around each UV lamp.

B. The UV lamp sleeves shall be high purity quartz tubing.

C. The open ends of the lamp sleeve shall be sealed using suitable O-rings.

D. The quartz sleeve shall not come into contact with any metal surface (steel) in the reactor.

E. Lamp sleeves shall not degrade due to exposure to the UV light.

F. The lamp sleeve shall be considered at the end of its useful life when it reduces the amount of disinfecting UV irradiance entering the water by more than 30 percent. The UV/AOP System design shall incorporate quartz sleeve material rated for greater than 90% UV transmittance at 254 nm at the start of its life.

G. The quartz sleeve shall be designed such that removal of the sleeve only occurs during sleeve replacement.

H. Design shall be such that one operator can safely change the sleeves.

I. The electrical connections at the ends of the quartz sleeve shall be sealed plug designed with dual O-rings to seal.

2.05 BALLASTS

A. Electromagnetic ballasts or other power regulation device shall be used to power the UV reactors. Ballasts or power regulation devices shall be located integral or adjacent to the UV reactors.

B. Each ballast shall power one to two lamps.

C. Ballasts shall have a variable operation range of at least 60% to 100% of full rated output and be adjustable in 1% increments.

D. The UVEM shall furnish all interconnecting cabling for the UV system and control/power panel. The UVEM shall also furnish the data cabling for connection between the UV reactor and the control module. The Contractor shall provide the incoming power supply, conduit and field terminations, and power and control wiring as required for any appurtenant equipment.

E. Power distribution enclosures shall be complete with integral disconnect, overload protection, and short circuit protection.

F. In the event of a lamp breakage, there shall be a physical barrier to prevent water from reaching any electronics or wiring.

2.06 POWER DISTRIBUTION CENTER (PDC)

A. The appropriate number of PDCs shall be provided for each UV system.

B. Power distribution and lamp driver control for each UV system shall be through the associated PDC.

2.07 UV INTENSITY SENSOR

A. The UV Intensity Monitor UV sensor shall be supplied by the UVEM and shall be a germicidal UV sensor as defined by the EPA Ultraviolet Disinfection Guidance Manual (EPA 815-R-06-007).

B. The UVEM shall calibrate the sensor against a traceable standard prior to shipment and provide supporting calibration documentation.

C. Intensity sensors shall be certified in accordance with oNORM, DVGW, NIST or NPL. The sensors shall measure only the light emitted by the UV lamps at 253.7 nm.

D. Intensity shall be continuously displayed.

E. The UV sensors shall be accessed from the exterior of the UV reactor and shall be easily removed and replaced with the reference sensor for routine calibration while the UV system remains in operation.

F. The sensor shall have components that are resistant to UV light and chlorine at the maximum concentrations specified for operation.

G. The UV intensity measured by each active UV sensor shall be transmitted to the control module.

H. The sensor shall be unaffected by static, electromagnetic fields, or short wave radio emissions.

I. The sensor shall produce a 4-20 mA control signal, which shall be sent to the control module for continuous monitoring.

J. The UVEM shall provide all calibration instructions and necessary equipment for calibration of UV intensity sensors against reference sensors.

2.08 TEMPERATURE SENSOR

A. A temperature sensor shall be provided on each reactor. If excessive heat build-up occurs in a reactor, the sensor shall automatically trigger a high temperature alarm and shutdown the UV reactor. The sensor shall sense high temperature based on water temperature and air temperature (if the lamps are operating in a dewatered situation).

2.09 PLC

A. The UVEM-provided UV/AOP System PLC shall:

1. Interface with the Main CASSF PLC System (Sections 40 93 00, 40 95 10, and 40 95 20). The PLC system shall adhere to the hardware and software requirements provided in Section 40 95 10 and Section 40 95 20.

2. Provide the following dose control strategies:

a. UV dose. The control system shall determine the number of lamps and ballast power to maintain the target UV dose. The ballast power level shall be modulated by the UV system PLC to maintain sufficient UV dose based on an applied UV dosage algorithm. The algorithm shall be programmed to receive an input of the measured UV intensity, UV transmittance, and a signal from the UV AOP influent flow meter. The algorithm shall account for lamp age.

b. EED: The control system shall determine the number of lamps and ballast power to maintain a target EED based on a signal from the UV/AOP influent flow meter, measured UV intensity, UV transmittance, water temperature, and lamp age.

3. Calculate pathogen LRV.
4. Calculate NDMA and 1,4 dioxane LRV.
5. Be fully operable in local mode, without communication with the plant master PLC, although this shall not be the normal mode of operation. Be configured and programmed to communicate with the plant's master PLC.

B. The master PLC shall:

1. Incorporate the following signals from the UV/AOP system PLC:

c. UV intensity

d. UV dose

e. Electrical Energy Dose (EED) (kWh/kgal)

f. Influent and effluent UVT

g. UV reactor influent flow

h. Reactor temperature

i. Pathogen LRV

j. NDMA and 1,4-dioxane LRV

k. UV reactor influent total chlorine (before and after sodium hypochlorite injection)

l. UV reactor influent free chlorine residual UV reactor influent pH

2. Monitor the status of all vendor-furnished instrumentation for the UV reactors including any generated analysis data.
3. For dosing of SHC at each train, the master PLC shall use a trim function to control the SHC dosing to achieve a free chlorine residual setpoint based on a flow signal from the UV/AOP influent flow meter and the difference in the total chlorine residual measured at the UV/AOP influent before and after SHC addition. The free chlorine analyzer at the UV/AOP influent will be used as a secondary control point to confirm the free chlorine residual. The total chlorine analyzer in the UV/AOP effluent shall be used for monitoring purposes only (i.e., no control functions). If the SHC metering pump fails, the master PLC shall relay that signal to the UV system PLC.

2.10 OIT

A. The OIT screens shall indicate at a minimum:

1. Train flow rate
2. Calculated train UV dose
3. Lamp ON/OFF status (each lamp)
4. Reactor UV intensity
5. Estimated UV/AOP system power consumption
6. Percent ballast output
7. Alarms and warnings
8. All data specified in Section 2.09.B

2.11 INSTRUMENTATION AND CONTROL

A. A minimum of the following instrumentation shall be provided by the UVEM to allow continuous determination of UV dose:

1. UV intensity sensor (see Article 2.07)
2. UV influent flow meter. Magnetic flow meters shall be used.
3. UVT monitor
   a. One (1) per the following locations: UV reactor influent and UV reactor effluent
   b. The UVT analyzer shall detect and display the percentage of UV light at 254 nm wavelength that is transmitted through that sample.
   c. The UVT sensor shall have a path length of at least 1 cm.
   d. The UVT analyzer shall be able to detect UV percent transmittance over a minimum range of 50 to 100 percent with an accuracy of +/- 1%. The UVT reading shall update at least once every minute.

B. A minimum of the following instrumentation must be provided to allow continuous control and monitoring of the UV/AOP treatment:

1. Temperature sensor
2. Free Chlorine Analyzer

   Location: UV reactor influent after SHC injection
   a. The free chlorine analyzer system shall include a flow cell, pH sensor, free chlorine sensor, and a controller.
   b. The analyzer shall detect free chlorine concentrations with an amperometric method over a minimum range of 0 to 10 mg/L free chlorine as Cl2 with an accuracy of at least +/- 1%. The minimum frequency of measurements shall be at least once every 2 minutes.
   c. The analyzer shall be furnished with a pH sensor.
   d. The analyzer shall have a digital display showing the measured free chlorine concentration in units of mg/L Cl2 and provide a touchpad for operator interface with the machine.

e. The analyzer shall provide capability to export free chlorine concentration and pH data using a 4-20 mA output.

f. Power requirement: 12-24 VDC

g. The amperometric free chlorine analyzer shall be as manufactured by:

(1) ATI Model Q46H/62
(2) Rosemount Model FCL-02-221
(3) Or approved equal

3. Total Chlorine Analyzer

a. One per the following locations: UV reactor influent before SHC injection, UV reactor influent after SHC injection, UV reactor effluent

b. The analyzer shall detect total chlorine concentrations with a colorimetric N,N-diethyl-p-phenylenediamine (DPD) method over a minimum range of 0 to 10 mg/L Cl2 with an accuracy of at least +/- 1%. The minimum frequency of measurements shall be at least once every 2 minutes.

c. The analyzer shall have a digital display showing the measured total chlorine concentration in units of mg/L Cl2 and provide a touchpad for operator interface with the machine. The system shall support a single or dual channel arrangement, 4-20 mA each, proportional to the measured variable. Power requirement: 24 VDC.

d. The DPD-based total chlorine analyzer shall be as manufactured by:

e. HACH Model CL17sc with sc200 controller or approved equal

PART 3 - EXECUTION

3.01 UV REACTOR SYSTEM WARRANTY

A. The UVEM shall provide a standard workmanship and materials warranty for the UV reactor system, excluding the UV lamps (see 3.02), quartz sleeves (see 3.03), ballast(s) (see 3.04), and UV Sensor (see 3.05), for a period of 12 months from first use or 18 months from date of delivery to the Owner's installation site. This standard workmanship and materials warranty shall apply to all work, materials, equipment, and products manufactured and incorporated by the UVEM into the UV reactor system, with the exception of the UV lamps, quartz sleeves, ballasts and UV sensors, and shall warrant that these items are free from defects in material and workmanship when properly installed, maintained, and operated.

3.02 UV LAMP WARRANTY

A. The UV lamp warranty shall guarantee that the UV lamps supplied under these specifications are warranted by the UVEM to be free from defect in materials and workmanship for a period of twelve (12) months from first use.

B. UV lamps shall be warranted for a minimum of 12,000 hours of operation, pro-rated after 9,000 hours. Lamps that fail prior to 9,000 hours of operation shall be replaced by the UVEM at no cost to the Owner.

3.03 QUARTZ SLEEVE WARRANTY

A. The quartz sleeve warranty shall guarantee that the UV lamps supplied under these specifications are warranted by the UVEM to be free from defect in materials and workmanship for a period of twelve (12) months from first use.

B. Quartz sleeves shall be warranted for a minimum of 5 years of operation, pro-rated after 1 year.

3.04 BALLAST WARRANTY

A. The ballast warranty shall guarantee that the ballasts supplied under these specifications are warranted by the UVEM to be free from defect in materials and workmanship for a period of twelve (12) months from first use.

B. Ballasts shall be warranted for a minimum of 5 years of operation, pro-rated after 1 year.

3.05 UV SENSOR WARRANTY

A. The UV sensor warranty shall guarantee that the UV sensor supplied under these specifications is warranted by the UVEM to be free from defect in materials and workmanship for a period of twelve (12) months from first use.

B. The UV sensor shall be warranted for a minimum of 5 years of operation, pro-rated after 1 year.

3.06 INSTALLATION, STARTUP, COMMISSIONING, TRAINING, AND OPERATIONS SUPPORT

A. Factory Acceptance Test

1. Prior to shipping the Equipment to site, the UVEM shall provide a Factory Acceptance Test at the UV Manufacturer's facility. A copy of the factory test, including test results and dimensions shall be provided to the Contractor.

2. The UVEM shall provide the ability to remotely participate in the Factory Acceptance Testing activities.

B. Installation

1. The UV equipment shall be installed by the Contractor.

2. The UVEM shall submit erection drawings and installation instructions as specified or requested by the Contractor.

3. The UVEM shall be present on site during the installation.

4. All equipment shall be mounted and installed according to the anchorage requirements in Section 43 05 11

5. Before Functional and Performance Testing, the UVEM shall provide a factory trained field service representative to visit the site for a minimum of one (1) day (8 hours), one (1) trip and certify that equipment has been installed, aligned, and checked in accordance with the Manufacturer's instructions and specifications.

6. Upon completion of equipment installation checks, the UVEM shall submit to the Contractor written certification that all UV equipment and accessory equipment associated with the UV/AOP System has been properly installed, is in good

condition, is functioning properly, and is in accordance with the Contract Documents.

C. Functional Testing

1. The UVEM and Contractor shall provide Functional testing in accordance with Section 01 91 14.
2. Functional Testing shall not begin until a test plan is submitted 60 days prior to testing and is approved by the Owner/Engineer.
3. The purpose of the Functional Testing is to ensure, through testing and operation, that the UV system (including ancillary systems and related components) is operating properly and consistent with their intended function before the Performance Test. The Functional Test shall demonstrate the operability of the communications between the Master PLC and UV/AOP system PLC and the proper installation and operation of the system components.
4. Activities to be performed during the Functional Test include, but are not limited to, balancing, adjustments, calibration of analyzers and sensors, loop checks, and loop validation.
5. The UVEM is responsible for providing a qualified representative to perform these tasks in cooperation with the Contractor and they shall coordinate these activities with relevant parties.
6. The Functional Test shall be witnessed by the Owner and/or OA.
7. Functional Testing should last no longer than 30 days.

D. Performance Testing During Commissioning

1. The UVEM and Contractor shall provide Performance Testing During Commissioning (Performance Test hereinafter) in accordance with Section 01 91 14.
2. The Contractor shall submit a Performance Test Plan to the Owner/OA at least 60 days prior to testing for approval before testing can commence.
3. The Performance Test is intended to demonstrate that the UV system satisfies operational and maintenance requirements. The test shall confirm that the reactor/s are properly installed, operational, capable of operating free of problems and free from overheating, vibration or other operating problems. The Performance Test shall include, but not be limited to, the verification of the following:
   a. Flow measurement
   b. Start-up, failure, and shutdown sequences
   c. System electrical components
   d. Instrument calibration and consistent outputs
   e. Lamp output by measurement of intensity at known UV transmittance and ballast outputs
   f. Sleeve cleaning system (if option included in the system)
   g. Headloss through the system

h. Trending of information

i. Interfacing with the master PLC system

j. Alarms and system response to alarm conditions

4. The UVEM is responsible for providing a qualified representative to perform these tasks in cooperation with the Contractor and they shall coordinate these activities with relevant parties.

E. Training: After completion of the commissioning test, a thorough training by a qualified UVEM representative shall be provided for 1 business day at the project site. Training shall include, but not limited to, system control, maintenance, and lamp and sensor replacement. Follow-up training, technical support and system troubleshooting shall include two site visits of a minimum of 2 business days.

END OF SECTION

THIS PAGE INTENTIONALLY LEFT BLANK

SUPPLEMENTARY SPECIAL PROVISIONS

APPENDICES

APPENDIX A

NOTICE OF EXEMPTION

NOTICE OF EXEMPTION

(Check one or both)

TO: X RECORDER/COUNTY CLERK
P.O.BOX 1750, MS A-33
1600 PACIFIC HWY, ROOM 260
SAN DIEGO, CA 92101-2422

_____ OFFICE OF PLANNING AND RESEARCH
1400 TENTH STREET, ROOM 121
SACRAMENTO, CA 95814

FROM: CITY OF SAN DIEGO
PUBLIC UTILITIES DEPARTMENT
9192 TOPAZ WAY
SAN DIEGO, CA 92123

PROJECT NO.: N/A **PROJECT TITLE:** PURE WATER PROGRAM CENTRAL AREA SMALL SCALE FACILITY

PROJECT LOCATION-SPECIFIC: North end of Point Loma Wastewater Treatment Plant - 1902 Gatchell Road, San Diego, CA 92106 (APNs 532-520-06 and 532-520-12); Council District 2.

PROJECT LOCATION-CITY/COUNTY: City of San Diego/County of San Diego

DESCRIPTION OF NATURE AND PURPOSE OF THE PROJECT: In preparation for Pure Water Phase 2, a new Central Area Small-Scale Facility (CASSF) will be constructed. The CASSF is proposed to be located at the north end of the Point Loma Wastewater Treatment Plant (PLWTP). The purpose of the CASSF is to demonstrate compliance with anticipated potable reuse regulatory requirements utilizing the treatment processes incorporated into the CASSF. The CASSF will be operated as a standalone facility and will install equipment to support wastewater treatment within the facility. Equipment will include primary influent and effluent feed pumps, blend tank, fine screen, secondary/tertiary treatment consisting of biological nutrient removal (BNR) and membrane bioreactors (MBR), Ozone, BAC, Membrane Filtration, Reverse Osmosis, and Ultraviolet/Advanced Oxidation Process.

The proposed CASSF will be constructed in the developed footprint of the PLWTP. The project will consist of approximately 17,873-square feet (sq ft) of grading for the facility and access road. Subsurface excavation will consist of approximately 380 cubic yards (cu yds) excavated to a depth of 5-feet (ft) below ground surface (bgs). This also includes utility trenching estimated 500-ft in length, 4-ft in width, and up to 6-ft in depth to install new 2 to 12-inch pipes. Vegetation to be removed includes ornamental succulents and native landscaping. All staging will occur within an existing parking lot or within disturbed (previously graded) areas of the PLWTP. The appropriate Best Management Practices (BMPs) would be used before, during, and after all project-related construction where necessary to prevent offsite sedimentation.

NAME OF PUBLIC AGENCY APPROVING PROJECT: City of San Diego, Public Utilities Department

NAME OF PERSON OR AGENCY CARRYING OUT PROJECT: City of San Diego - Public Utilities Department
9192 Topaz Way, San Diego, CA 92123; Project Manager: Joseph Quicho (858) 292-6479

EXEMPT STATUS: (CHECK ONE)

( ) MINISTERIAL (SEC. 21080(b)(1); 15268);
( ) DECLARED EMERGENCY (SEC. 21080(b)(3); 15269(a);
( ) EMERGENCY PROJECT (SEC. 21080(b)(4)
(X) CATEGORICAL EXEMPTION: **15303 NEW CONSTRUCTION; 15304 MINOR ALTERATIONS TO LAND; 15306 INFORMATION COLLECTION**
( ) STATUTORY EXEMPTIONS:

REASONS WHY PROJECT IS EXEMPT: The City of San Diego conducted an environmental review that determined the project would not have the potential for causing a significant effect on the environment pursuant to State CEQA Guidelines Sections 15303 New Construction which allows for construction of new, small facilities and installation of new, small equipment; 15304 Minor Alterations to Land which allows for minor private alterations in the condition of land; 15306 Information Collection which allows for the basic data collection not resulting in a major disturbance to an environmental resource; and where the exceptions

listed in CEQA Section 15300.2 would not apply in that no cumulative impacts were identified; no significant effects on the environment were identified; the project is not adjacent to a scenic highway; no historical resources would be affected by the action; and the project was not identified on a list of hazardous waste sites pursuant to Section 65962.5 of the Government.

LEAD AGENCY CONTACT PERSON: Megan Hickey, Principal Water Resources Specialist, Public Utilities Department, Telephone: (858) 614-5789

IF FILED BY APPLICANT:

1. ATTACH CERTIFIED DOCUMENT OF EXEMPTION FINDING.
2. HAS A NOTICE OF EXEMPTION BEEN FILED BY THE PUBLIC AGENCY APPROVING THE PROJECT?
   ( ) YES ( ) NO

IT IS HEREBY CERTIFIED THAT THE CITY OF SAN DIEGO HAS DETERMINED THE ABOVE ACTIVITY TO BE EXEMPT FROM CEQA

MEGAN HICKEY, PRINCIPAL WATER RESOURCES SPECIALIST

3/25/2022
DATE

CHECK ONE:
(X) SIGNED BY LEAD AGENCY
( ) SIGNED BY APPLICANT

DATE RECEIVED FOR FILING WITH COUNTY CLERK OR OPR:

APPENDIX B

FIRE HYDRANT METER PROGRAM

CITY OF SAN DIEGO CALIFORNIA DEPARTMENT INSTRUCTIONS	NUMBER **DI** 55.27	DEPARTMENT Water Department
SUBJECT **FIRE HYDRANT METER PROGRAM (FORMERLY: CONSTRUCTION METER PROGRAM)**	**PAGE** 1**OF** 10	**EFFECTIVE DATE** October 15, 2002
	SUPERSEDES **DI** 55.27	**DATED** April 21, 2000

1. **PURPOSE**

1.1 To establish a Departmental policy and procedure for issuance, proper usage and charges for fire hydrant meters.

2. **AUTHORITY**

2.1 All authorities and references shall be current versions and revisions.

2.2 San Diego Municipal Code (NC) Chapter VI, Article 7, Sections 67.14 and 67.15

2.3 Code of Federal Regulations, Safe Drinking Water Act of 1986

2.4 California Code of Regulations, Titles 17 and 22

2.5 California State Penal Code, Section 498B.0

2.6 State of California Water Code, Section 110, 500-6, and 520-23

2.7 Water Department Director

Reference

2.8 State of California Guidance Manual for Cross Connection Programs

2.9 American Water Works Association Manual M-14, Recommended Practice for Backflow Prevention

2.10 American Water Works Association Standards for Water Meters

2.11 U.S.C. Foundation for Cross Connection Control and Hydraulic Research Manual

3. **DEFINITIONS**

3.1 **Fire Hydrant Meter:** A portable water meter which is connected to a fire hydrant for the purpose of temporary use. (These meters are sometimes referred to as Construction Meters.)

3.2 **Temporary Water Use:** Water provided to the customer for no longer than twelve (12) months.

3.3 **Backflow Preventor:** A Reduced Pressure Principal Assembly connected to the outlet side of a Fire Hydrant Meter.

4. **POLICY**

4.1 The Water Department shall collect a deposit from every customer requiring a fire hydrant meter and appurtenances prior to providing the meter and appurtenances (see Section 7.1 regarding the Fees and Deposit Schedule). The deposit is refundable upon the termination of use and return of equipment and appurtenances in good working condition.

4.2 Fire hydrant meters will have a 2 ½" swivel connection between the meter and fire hydrant. The meter shall not be connected to the 4" port on the hydrant. All Fire Hydrant Meters issued shall have a Reduced Pressure Principle Assembly (RP) as part of the installation. Spanner wrenches are the only tool allowed to turn on water at the fire hydrant.

4.3 The use of private hydrant meters on City hydrants is prohibited, with exceptions as noted below. All private fire hydrant meters are to be phased out of the City of San Diego. All customers who wish to continue to use their own fire hydrant meters must adhere to the following conditions:

a. Meters shall meet all City specifications and American Water Works Association (AWWA) standards.

b. Customers currently using private fire hydrant meters in the City of San Diego water system will be allowed to continue using the meter under the following conditions:

1. The customer must submit a current certificate of accuracy and calibration results for private meters and private backflows annually to the City of San Diego, Water Department, Meter Shop.

2. The meter must be properly identifiable with a clearly labeled serial number on the body of the fire hydrant meter. The serial number shall be plainly stamped on the register lid and the main casing. Serial numbers shall be visible from the top of the meter casing and the numbers shall be stamped on the top of the inlet casing flange.

3. All meters shall be locked to the fire hydrant by the Water Department, Meter Section (see Section 4.7).

4. All meters shall be read by the Water Department, Meter Section (see Section 4.7).

5. All meters shall be relocated by the Water Department, Meter Section (see Section 4.7).

6. These meters shall be tested on the anniversary of the original test date and proof of testing will be submitted to the Water Department, Meter Shop, on a yearly basis. If not tested, the meter will not be allowed for use in the City of San Diego.

7. All private fire hydrant meters shall have backflow devices attached when installed.

8. The customer must maintain and repair their own private meters and private backflows.

9. The customer must provide current test and calibration results to the Water Department, Meter Shop after any repairs.

10. When private meters are damaged beyond repair, these private meters will be replaced by City owned fire hydrant meters.

11. When a private meter malfunctions, the customer will be notified and the meter will be removed by the City and returned to the customer for repairs. Testing and calibration results shall be given to the City prior to any re-installation.

12. The register shall be hermetically sealed straight reading and shall be readable from the inlet side. Registration shall be in hundred cubic feet.

13. The outlet shall have a 2 ½ "National Standards Tested (NST) fire hydrant male coupling.

14. Private fire hydrant meters shall not be transferable from one contracting company to another (i.e. if a company goes out of business or is bought out by another company).

4.4 All fire hydrant meters and appurtenances shall be installed, relocated and removed by the City of San Diego, Water Department. All City owned fire hydrant meters and appurtenances shall be maintained by the City of San Diego, Water Department, Meter Services.

4.5 If any fire hydrant meter is used in violation of this Department Instruction, the violation will be reported to the Code Compliance Section for investigation and appropriate action. Any customer using a fire hydrant meter in violation of the requirements set forth above is subject to fines or penalties pursuant to the Municipal Code, Section 67.15 and Section 67.37.

4.6 **Conditions and Processes for Issuance of a Fire Hydrant Meter**

Process for Issuance

a. Fire hydrant meters shall only be used for the following purposes:

1. Temporary irrigation purposes not to exceed one year.

2. Construction and maintenance related activities (see Tab 2).

b. No customer inside or outside the boundaries of the City of San Diego Water Department shall resell any portion of the water delivered through a fire hydrant by the City of San Diego Water Department.

c. The City of San Diego allows for the issuance of a temporary fire hydrant meter for a period not to exceed 12 months (365 days). An extension can only be granted in writing from the Water Department Director for up to 90 additional days. A written request for an extension by the consumer must be submitted at least 30 days prior to the 12 month period ending. No extension shall be granted to any customer with a delinquent account with the Water Department. No further extensions shall be granted.

d. Any customer requesting the issuance of a fire hydrant meter shall file an application with the Meter Section. The customer must complete a "Fire Hydrant Meter Application" (Tab 1) which includes the name of the company, the party responsible for payment, Social Security number and/or California ID, requested location of the meter (a detailed map signifying an exact location), local contact person, local phone number, a contractor's license (or a business license), description of specific water use, duration of use at the site and full name and address of the person responsible for payment.

e. At the time of the application the customer will pay their fees according to the schedule set forth in the Rate Book of Fees and Charges, located in the City Clerk's Office. All fees must be paid by check, money order or cashiers check, made payable to the City Treasurer. Cash will not be accepted.

f. No fire hydrant meters shall be furnished or relocated for any customer with a delinquent account with the Water Department.

g. After the fees have been paid and an account has been created, the

meter shall be installed within 48 hours (by the second business day). For an additional fee, at overtime rates, meters can be installed within 24 hours (within one business day).

4.7 **Relocation of Existing Fire Hydrant Meters**

a. The customer shall call the Fire Hydrant Meter Hotline (herein referred to as "Hotline"), a minimum of 24 hours in advance, to request the relocation of a meter. A fee will be charged to the existing account, which must be current before a work order is generated for the meter's relocation.

b. The customer will supply in writing the address where the meter is to be relocated (map page, cross street, etc). The customer must update the original Fire Hydrant Meter Application with any changes as it applies to the new location.

c. Fire hydrant meters shall be read on a monthly basis. While fire hydrant meters and backflow devices are in service, commodity, base fee and damage charges, if applicable, will be billed to the customer on a monthly basis. If the account becomes delinquent, the meter will be removed.

4.8 **Disconnection of Fire Hydrant Meter**

a. After ten (10) months a "Notice of Discontinuation of Service" (Tab 3) will be issued to the site and the address of record to notify the customer of the date of discontinuance of service. An extension can only be granted in writing from the Water Department Director for up to 90 additional days (as stated in Section 4.6C) and a copy of the extension shall be forwarded to the Meter Shop Supervisor. If an extension has not been approved, the meter will be removed after twelve (12) months of use.

b. Upon completion of the project the customer will notify the Meter Services office via the Hotline to request the removal of the fire hydrant meter and appurtenances. A work order will be generated

for removal of the meter.

c. Meter Section staff will remove the meter and backflow prevention assembly and return it to the Meter Shop. Once returned to the Meter Shop the meter and backflow will be tested for accuracy and functionality.

d. Meter Section Staff will contact and notify Customer Services of the final read and any charges resulting from damages to the meter and backflow or its appurtenance. These charges will be added on the customer's final bill and will be sent to the address of record. Any customer who has an outstanding balance will not receive additional meters.

e. Outstanding balances due may be deducted from deposits and any balances refunded to the customer. Any outstanding balances will be turned over to the City Treasurer for collection. Outstanding balances may also be transferred to any other existing accounts.

5. EXCEPTIONS

5.1 Any request for exceptions to this policy shall be presented, in writing, to the Customer Support Deputy Director, or his/her designee for consideration.

6. MOBILE METER

6.1 Mobile meters will be allowed on a case by case basis. All mobile meters will be protected by an approved backflow assembly and the minimum requirement will be a Reduced Pressure Principal Assembly. The two types of Mobile Meters are vehicle mounted and floating meters. Each style of meters has separate guidelines that shall be followed for the customer to retain service and are described below:

a) **Vehicle Mounted Meters**: Customer applies for and receives a City owned Fire Hydrant Meter from the Meter Shop. The customer mounts the meter on the vehicle and brings it to the Meter Shop for

inspection. After installation is approved by the Meter Shop the vehicle and meter shall be brought to the Meter Shop on a monthly basis for meter reading and on a quarterly basis for testing of the backflow assembly. Meters mounted at the owner's expense shall have the one year contract expiration waived and shall have meter or backflow changed if either fails.

b) **Floating Meters**: Floating Meters are meters that are not mounted to a vehicle. **(Note: All floating meters shall have an approved backflow assembly attached.)** The customer shall submit an application and a letter explaining the need for a floating meter to the Meter Shop. The Fire Hydrant Meter Administrator, after a thorough review of the needs of the customer, (i.e. number of jobsites per day, City contract work, lack of mounting area on work vehicle, etc.), may issue a floating meter. At the time of issue, it will be necessary for the customer to complete and sign the "Floating Fire Hydrant Meter Agreement" which states the following:

1) The meter will be brought to the Meter Shop at 2797 Caminito Chollas, San Diego on the third week of each month for the monthly read by Meter Shop personnel.

2) Every other month the meter will be read and the backflow will be tested. This date will be determined by the start date of the agreement.

If any of the conditions stated above are not met the Meter Shop has the right to cancel the contract for floating meter use and close the account associated with the meter. The Meter Shop will also exercise the right to refuse the issuance of another floating meter to the company in question.

Any Fire Hydrant Meter using reclaimed water shall not be allowed use again with any potable water supply. The customer shall incur the cost of replacing the meter and backflow device in this instance.

7. **FEE AND DEPOSIT SCHEDULES**

7.1 **Fees and Deposit Schedules:** The fees and deposits, as listed in the Rate Book of Fees and Charges, on file with the Office of the City Clerk, are based on actual reimbursement of costs of services performed, equipment and materials. Theses deposits and fees will be amended, as needed, based on actual costs. Deposits, will be refunded at the end of the use of the fire hydrant meter, upon return of equipment in good working condition and all outstanding balances on account are paid. Deposits can also be used to cover outstanding balances.

All fees for equipment, installation, testing, relocation and other costs related to this program are subject to change without prior notification. The Mayor and Council will be notified of any future changes.

8. **UNAUTHORIZED USE OF WATER FROM A HYDRANT**

8.1 Use of water from any fire hydrant without a properly issued and installed fire hydrant meter is theft of City property. Customers who use water for unauthorized purposes or without a City of San Diego issued meter will be prosecuted.

8.2 If any unauthorized connection, disconnection or relocation of a fire hydrant meter, or other connection device is made by anyone other than authorized Water Department personnel, the person making the connection will be prosecuted for a violation of San Diego Municipal Code, Section 67.15. In the case of a second offense, the customer's fire hydrant meter shall be confiscated and/or the deposit will be forfeited.

8.3 Unauthorized water use shall be billed to the responsible party. Water use charges shall be based on meter readings, or estimates when meter readings are not available.

8.4 In case of unauthorized water use, the customer shall be billed for all applicable charges as if proper authorization for the water use had been obtained, including but not limited to bi-monthly service charges, installation charges and removal charges.

8.5 If damage occurs to Water Department property (i.e. fire hydrant meter, backflow, various appurtenances), the cost of repairs or replacements will be charged to the customer of record (applicant).

Water Department Director

Tabs:
1. Fire Hydrant Meter Application
2. Construction & Maintenance Related Activities With No Return To Sewer
3. Notice of Discontinuation of Service

APPENDIX

Administering Division: Customer Support Division

Subject Index:
Construction Meters
Fire Hydrant
Fire Hydrant Meter Program
Meters, Floating or Vehicle Mounted
Mobile Meter
Program, Fire Hydrant Meter

Distribution: DI Manual Holders

Application for Fire Hydrant Meter (EXHIBIT A)

City of San Diego PUBLIC UTILITIES Water & Wastewater

(For Office Use Only)

NS REQ	FAC#
DATE	BY

METER SHOP (619) 527-7449

Application Date	Requested Install Date:

Meter Information

Fire Hydrant Location: (Attach Detailed Map//Thomas Bros. Map Location or Construction drawing.) Zip:	T.B.	G.B. (CITY USE)
Specific Use of Water:		
Any Return to Sewer or Storm Drain, If so , explain:		
Estimated Duration of Meter Use:	☐	Check Box if Reclaimed Water

Company Information

Company Name:			
Mailing Address:			
City:	State:	Zip:	Phone: ( )
*Business license#	*Contractor license#		
A Copy of the Contractor's license OR Business License is required at the time of meter issuance.			
Name and Title of Billing Agent: (PERSON IN ACCOUNTS PAYABLE)			Phone: ( )
Site Contact Name and Title:			Phone: ( )
Responsible Party Name:			Title:
Cal ID#			Phone: ( )
Signature:		Date:	

Guarantees Payment of all Charges Resulting from the use of this Meter. Insures that employees of this Organization understand the proper use of Fire Hydrant Meter

☐ Fire Hydrant Meter Removal Request	Requested Removal Date:	
Provide Current Meter Location if Different from Above:		
Signature:	Title:	Date:
Phone: ( )	Pager: ( )	

☐ City Meter ☐ Private Meter		
Contract Acct #:	Deposit Amount: $ 936.00	Fees Amount: $ 62.00
Meter Serial #	Meter Size: 05	Meter Make and Style: 6-7
Backflow #	Backflow Size:	Backflow Make and Style:
Name:	Signature:	Date:

WATER USES WITHOUT ANTICIPATED CHARGES FOR RETURN TO SEWER

Auto Detailing
Backfilling
Combination Cleaners (Vactors)
Compaction
Concrete Cutters
Construction Trailers
Cross Connection Testing
Dust Control
Flushing Water Mains
Hydro Blasting
Hydro Seeing
Irrigation (for establishing irrigation only; not continuing irrigation)
Mixing Concrete
Mobile Car Washing
Special Events
Street Sweeping
Water Tanks
Water Trucks
Window Washing

Note:

1. If there is any return to sewer or storm drain, then sewer and/or storm drain fees will be charges.

Date

Name of Responsible Party
Company Name and Address
Account Number:_____

Subject: Discontinuation of Fire Hydrant Meter Service

Dear Water Department Customer:

The authorization for use of Fire Hydrant Meter #_____, located at *(Meter Location Address)* ends in 60 days and will be removed on or after *(Date Authorization Expires)*. Extension requests for an additional 90 days must be submitted in writing for consideration 30 days prior to the discontinuation date. If you require an extension, please contact the Water Department, or mail your request for an extension to:

City of San Diego
Water Department
Attention: Meter Services
2797 Caminito Chollas
San Diego, CA 92105-5097

Should you have any questions regarding this matter, please call the Fire Hydrant Hotline at (619)_____-_____.

Sincerely,

Water Department

APPENDIX C

MATERIALS TYPICALLY ACCEPTED BY CERTIFICATE OF COMPLIANCE

MATERIALS TYPICALLY ACCEPTED BY CERTIFICATE OF COMPLIANCE

1. Soil amendment
2. Fiber mulch
3. PVC or PE pipe up to 16 inch diameter
4. Stabilizing emulsion
5. Lime
6. Preformed elastomeric joint seal
7. Plain and fabric reinforced elastomeric bearing pads
8. Steel reinforced elastomeric bearing pads
9. Waterstops (Special Condition)
10. Epoxy coated bar reinforcement
11. Plain and reinforcing steel
12. Structural steel
13. Structural timber and lumber
14. Treated timber and lumber
15. Lumber and timber
16. Aluminum pipe and aluminum pipe arch
17. Corrugated steel pipe and corrugated steel pipe arch
18. Structural metal plate pipe arches and pipe arches
19. Perforated steel pipe
20. Aluminum underdrain pipe
21. Aluminum or steel entrance tapers, pipe downdrains, reducers, coupling bands and slip joints
22. Metal target plates
23. Paint (traffic striping)
24. Conductors
25. Painting of electrical equipment
26. Electrical components
27. Engineering fabric
28. Portland Cement
29. PCC admixtures
30. Minor concrete, asphalt
31. Asphalt (oil)
32. Liquid asphalt emulsion
33. Epoxy

APPENDIX D

SAMPLE CITY INVOICE WITH CASH FLOW FORECAST

City of San Diego, CM&FS Div., 9753 Chesapeake Drive, SD CA 92123
Project Name:
Work Order No or Job Order No.
City Purchase Order No.
Resident Engineer (RE):
RE Phone#: Fax#:

Contractor's Name:
Contractor's Address:

Contractor's Phone #:
Contractor's fax #:
Contact Name:

Invoice No.
Invoice Date:
Billing Period: (To)

Item #	Item Description	Contract Authorization				Previous Totals To Date		This Estimate		Totals to Date	
		Unit	Price	Qty	Extension	%/QTY	Amount	% / QTY	Amount	% / QTY	Amount
1					$ -		$ -		$ -	0.00	$ -
2					$ -		$ -		$ -	0.00%	$ -
3					$ -		$ -		$ -	0.00%	$ -
4					$ -		$ -		$ -	0.00%	$ -
5					$ -		$ -		$ -	0.00%	$ -
6					$ -		$ -		$ -	0.00%	$ -
7					$ -		$ -		$ -	0.00%	$ -
8					$ -		$ -		$ -	0.00%	$ -
5					$ -		$ -		$ -	0.00%	$ -
6					$ -		$ -		$ -	0.00%	$ -
7					$ -		$ -		$ -	0.00%	$ -
8					$ -		$ -		$ -	0.00%	$ -
9					$ -		$ -		$ -	0.00%	$ -
10					$ -		$ -		$ -	0.00%	$ -
11					$ -		$ -		$ -	0.00%	$ -
12					$ -		$ -		$ -	0.00%	$ -
13					$ -		$ -		$ -	0.00%	$ -
14					$ -		$ -		$ -	0.00%	$ -
15					$ -		$ -		$ -	0.00%	$ -
16					$ -		$ -		$ -	0.00%	$ -
17	**Field Orders**				$ -		$ -		$ -	0.00%	$ -
					$ -		$ -		$ -	0.00%	$ -
	CHANGE ORDER No.				$ -		$ -		$ -	0.00%	$ -
					$ -		$ -		$ -	0.00%	$ -
	Total Authorized Amount (including approved Change Order)				**$ -**		**$ -**		$ -	**Total Billed**	$ -

SUMMARY

A. Original Contract Amount	$ -
B. Approved Change Order #00 Thru #00	$ -
C. Total Authorized Amount (A+B)	$ -
D. Total Billed to Date	$ -
E. Less Total Retention (5% of D)	$ -
F. Less Total Previous Payments	$ -
G. Payment Due Less Retention	**$0.00**
H. Remaining Authorized Amount	$0.00

I certify that the materials have been received by me in the quality and quantity specified

_____
Resident Engineer

_____
Construction Engineer

Retention and/or Escrow Payment Schedule

Total Retention Required as of this billing (Item E)	$0.00
Previous Retention Withheld in PO or in Escrow	$0.00
Add'l Amt to Withhold in PO/Transfer in Escrow:	***$0.00***
Amt to Release to Contractor from PO/Escrow:	

Contractor Signature and Date: _____

NOTE: CONTRACTOR TO CALCULATE TO THE 2ND DECIMAL PLACE.

SAMPLE REFERENCE

WBS #:	B18108
Date Submitted:	10/10/2018
NTP Date:	3/23/2018
Final Statement of WD Date:	5/23/2020
Contract #:	K-XX-XXXX-XXX-X
Contract Amount:	$5,617,000

Construction Cash Flow Forecast

"Sewer and Water Group Job 965 (W)"

Year	January	February	March	April	May	June	July	August	September	October	November	December
2018				15,000	25,000	52,000	52,000	100,000	10,000	100,000	100,000	100,000
2019	10,000	10,000	85,000	58,000	100,000	100,000	100,000	100,000	100,000	100,000	1,000,000	1,000,000
2020	100,000	100,000	100,000	1,000,000	1,000,000							
2021												
2022												
2023												
2024												
2025												

SAMPLE REFERENCE

APPENDIX E

LOCATION MAP

THIS MAP/DATA IS PROVIDED WITHOUT WARRANTY OF ANY KIND, EITHER EXPRESS OR IMPLIED, INCLUDING, BUT NOT LIMITED TO, THE IMPLIED WARRANTIES OR MERCHANTABILITY AND FITNESS FOR A PARTICULAR PURPOSE. Note: This product may contain information from the SANDAG Regional Information System which cannot be reproduced without the written permission of SANDAG. This product may contain information reproduce with permission granted by RAND MCNALLY & COMPANY© to SanGIS. This map is copyrighted by RAND MCNALLY & COMPANY©. It is unlawful to copy or reproduce all or any part thereof, whether for personal use or resale, without the prior, written permission of RAND MCNALLY & COMPANY

Engineering & Capital Projects

PWP Central Area Small-Scale Facility Location Map

SENIOR ENGINEER
ALICE ALTES
619-527-7473

PROJECT MANAGER
JOSEPH QUICHO
858-292-6479

PROJECT ENGINEER
MICHAEL VIOLANTE
858-292-6386

FOR QUESTIONS ABOUT THIS PROJECT
Call: (619) 533-4207
Email: engineering@sandiego.gov

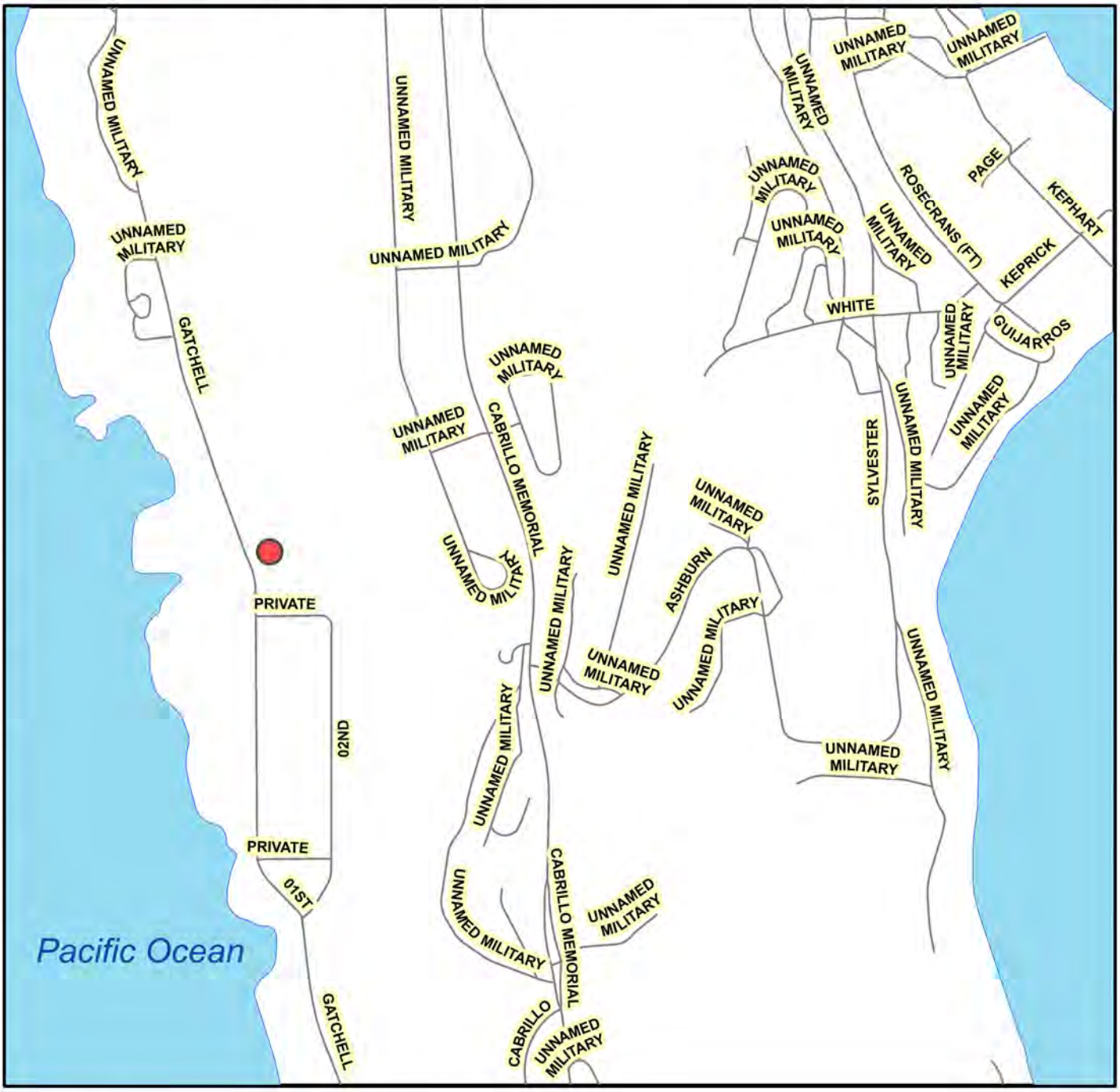

Legend

B21151

COMMUNITY NAME: Peninsula

COUNCIL DISTRICT: 2

WBS NO: B21151

Date: 9/16/2021

Pure Water Program (PWP) Central Area Small-Scale Facility
Bid No. K-23-2119-DBB-3-C

APPENDIX F

ADJACENT PROJECT MAP

THIS MAP/DATA IS PROVIDED WITHOUT WARRANTY OF ANY KIND, EITHER EXPRESS OR IMPLIED, INCLUDING, BUT NOT LIMITED TO, THE IMPLIED WARRANTIES OR MERCHANTABILITY AND FITNESS FOR A PARTICULAR PURPOSE. Note: This product may contain information from the SANDAG Regional Information System which cannot be reproduced without the written permission of SANDAG. This product may contain information reproduce with permission granted by RAND MCNALLY & COMPANY© to SanGIS. This map is copyrighted by RAND MCNALLY & COMPANY©. It is unlawful to copy or reproduce all or any part thereof, whether for personal use or resale, without the prior, written permission of RAND MCNALLY & COMPANY

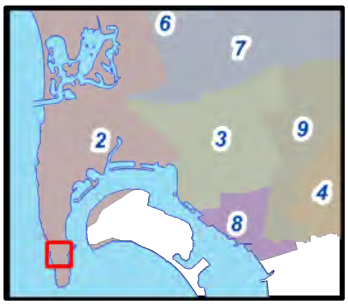

Engineering & Capital Projects

PWP Central Area Small-Scale Facility
Adjacent Projects Map

SENIOR ENGINEER
ALICE ALTES
619-527-7473

PROJECT MANAGER
JOSEPH QUICHO
858-292-6479

PROJECT ENGINEER
MICHAEL VIOLANTE
858-292-6386

FOR QUESTIONS ABOUT THIS PROJECT
Call: (619) 533-4207
Email: engineering@sandiego.gov

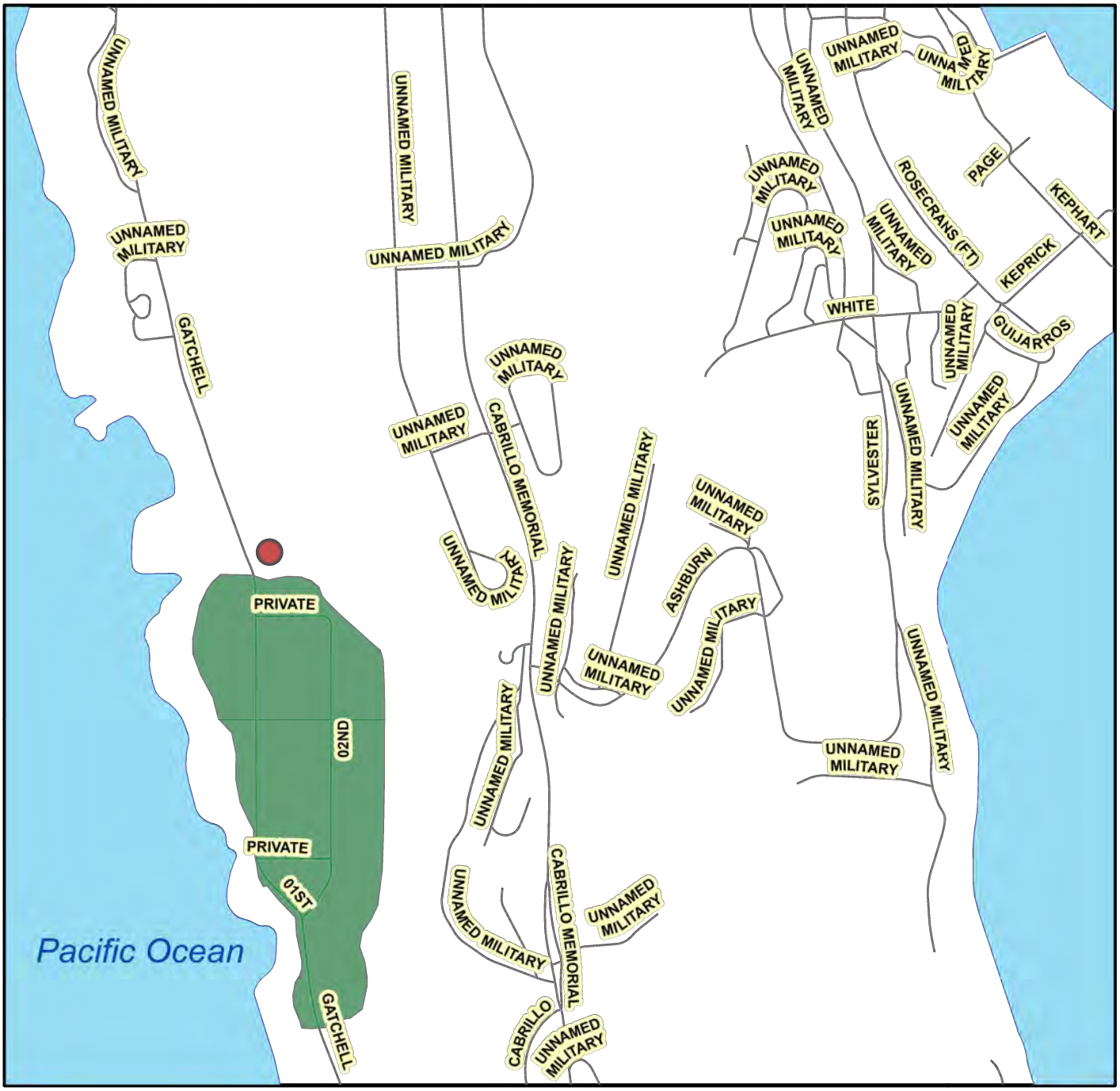

Legend

- B21151 - Central Area Small-Scale Facility
- B20001- PLWTP Stormwater Diversion Project

COMMUNITY NAME: Peninsula

COUNCIL DISTRICT: 2

WBS NO: B21151

Date: 5/10/2022

Pure Water Program (PWP) Central Area Small-Scale Facility
Bid No. K-23-2119-DBB-3-C

APPENDIX G

MONTHLY DRINKING WATER DISCHARGE MONITORING FORM

DRINKING WATER DISCHARGE MONITORING FORM

(Use for All Discharges to the Storm Drain)

All discharge activities related to this project comply with the State Water Resources Control Board ORDER WQ 2014-0194-DWQ, STATEWIDE GENERAL NPDES PERMIT FOR DRINKING WATER SYSTEMS DISCHARGES as referenced by (http://www.waterboards.ca.gov/water_issues/programs/npdes/docs/drinkingwater/final_statewide_wqo2014_0194_dwq.pdf), and as follows:

Project Name:		**WBS No.:**		**Watershed No.**	
Qualified Person Conducting Tests:		**signature**			

BMPs MUST BE IN PLACE PRIOR TO ANY SCHEDULED DISCHARGE

By signing, I certify that all of the statements and conditions for drinking water discharge events are correct.

Event #1

Discharge Location[1]	Catergory[2] (Select one)	Notification[3] (Select all that apply)	BMPs in Place[4] (Select all that apply)	Volume[5] (gal)	Sampling[6] (take samples at 10 mins, 50-60 mins & last 10 mins)				Exceedence[7]			Notes
					Measure	Unit	Time	Result	Limit	*No*	*Yes*	Report exceedence to RE & complete page 2 of 2
Inlet Location	☐ **Superchlorinated** (Chlorine added for disinfection)	☐ **TSW** (All Categories)	☐ **Sweep flow path** (gutter, street, etc.)	**Total**	***Chlorine***	**mg/L**			0.1 mg/L= Exceedance			
Start	☐ **Large Volume** (≥ 325,850 gal)	☐ **PUD** (All Categories)	☐ **Dechlorination** (diffusers, chemicals, etc.)	**Reused** (if any)								
Date:	☐ **Well Dev/Rehab** (Not Typical)	☐ **Water Board** (Large Volume Only)	☐ **Inlet Protection**		***Turbidity***	**NTU**			20 NTU= Exceedance 225 NTU= Exceedance for Ocean			
Time:			☐ **Erosion Controls**									
End	☐ **Small Volume/Other** (No Sampling Required)	☐ **County** (≥100,000 gal & within ¼ mile of ocean/bay; or if enters the County's MS4)	☐ **Sediment Controls**		***pH***	**Unit**			Range 6.5 to 8.5			
Date:												
Time:												

Event #2

Discharge Location[1]	Catergory[2] (Select one)	Notification[3] (Select all that apply)	BMPs in Place[4] (Select all that apply)	Volume[5] (gal)	Sampling[6] (take samples at 10 mins, 50-60 mins & last 10 mins)				Exceedence[7]			Notes
					Measure	Unit	Time	Result	Limit	*No*	*Yes*	Report exceedence to RE & complete page 2 of 2
Inlet Location	☐ **Superchlorinated** (Chlorine added for disinfection)	☐ **TSW** (All Categories)	☐ **Sweep flow path** (gutter, street, etc.)	**Total**	***Chlorine***	**mg/L**			0.1 mg/L= Exceedance			
Start	☐ **Large Volume** (≥ 325,850 gal)	☐ **PUD** (All Categories)	☐ **Dechlorination** (diffusers, chemicals, etc.)	**Reused** (if any)								
Date:	☐ **Well Dev/Rehab** (Not Typical)	☐ **Water Board** (Large Volume Only)	☐ **Inlet Protection**		***Turbidity***	**NTU**			20 NTU= Exceedance 225 NTU= Exceedance for Ocean			
Time:			☐ **Erosion Controls**									
End	☐ **Small Volume/Other** (No Sampling Required)	☐ **County** (≥100,000 gal & within ¼ mile of ocean/bay; or if enters the County's MS4)	☐ **Sediment Controls**		***pH***	**Unit**			Range 6.5 to 8.5			
Date:												
Time:												

Instructional Notes found on the Page 2 of 2

Submit completed Form to RE

Receiving Water Monitoring

(Complete only if limits exceed on Page 1 of 2)

Event #1		
1) Go to the location where the discharge enters the receiving water.		
☐ Accessible ☐ Unable to Determine ☐ No Safe Access		
2) If accessible, take photos and complete the visual monitoring below. If unable to determine, stop here. If no safe access, stop here.		
3) Visual Monitoring: Is the discharge into the receiving water…		
…causing erosion	☐ Yes	☐ No
…carrying floating or suspended matter	☐ Yes	☐ No
…causing discoloration	☐ Yes	☐ No
…causing and impact to the aquatic life present	☐ Yes	☐ No
…observed with visible film	☐ Yes	☐ No
…observed with an sheen or coating	☐ Yes	☐ No
…causing potential nuisance conditions	☐ Yes	☐ No
3) If all answers are NO, stop here.		
4) If any answers are YES, Notify the RE immediately for further action		

Event #2		
1) Go to the location where the discharge enters the receiving water.		
☐ Accessible ☐ Unable to Determine ☐ No Safe Access		
2) If accessible, take photos and complete the visual monitoring below. If unable to determine, stop here. If no safe access, stop here.		
3) Visual Monitoring: Is the discharge into the receiving water…		
…causing erosion	☐ Yes	☐ No
…carrying floating or suspended matter	☐ Yes	☐ No
…causing discoloration	☐ Yes	☐ No
…causing and impact to the aquatic life present	☐ Yes	☐ No
…observed with visible film	☐ Yes	☐ No
…observed with an sheen or coating	☐ Yes	☐ No
…causing potential nuisance conditions	☐ Yes	☐ No
3) If all answers are NO, stop here.		
4) If any answers are YES, Notify the RE immediately for further action		

Instructional Notes

1) Log the location of the inlet or discharge point. For example: Albatross St & 5th Av. Log the start date and time and the end date and time of the discharge.
2) Log the discharge category. "Superchlorinated" are discharges where additional chlorine is added in order to adequately disinfect and sanitize drinking water system facilities. This does NOT include potable water containing residual chlorine from the water treatment process. "Large Volume" discharges are greater than 325,850 gallons of total volume for one event. "Well Dev/Rehab" are discharges of potable ground water from a well. This is not typical. If none of these categories apply, then select "Small Volume/Other."
3) Notifications of the location, date, time, category, and estimated volume of discharge must be made to the contacts and per the requirements below:

Contact	When to Notify	Email
TSW	3 days prior to all discharges	SWPPP@SanDiego.gov
PUD	3 days prior to all discharges	CompReports@SanDiego.gov Rdavenport@SanDiego.gov
San Diego Water Board	3 days prior to Large Volume discharges	SanDiego@WaterBoards.ca.gov Ben.Neill@WaterBoards.ca.gov
County of San Diego	3 days prior if 100,000 gal and within 1/4 mile of ocean/bay	DEH: Joseph.Palmer@SDCounty.ca.gov Dominique.Edwards@SDCounty.ca.gov
	3 days prior if enter county MS4 or unincorporated County	WPP:Nicholas.DeValle@SDCounty.ca.gov LUEG.Watersheds@sdcounty.ca.gov

4) At a minimum, sweep gutters prior to starting discharge and use dechlorination BMPs. The contractor and RE must monitor and determine if BMPs need to be removed or modified. For example if inlet protection is causing flooding at a storm drain inlet, contractor may elect to remove BMPs. Document any modification to BMPs in the notes
5) Total volume must be logged for all discharges. If discharge water is reused for other purposes such as watering a golf course, log that volume under "Reused"
6) Sampling is required for categories per the following table:

Category	Measure	Sample Frequency
Superchlorinated	Chlorine, Turbidity, pH	first 10 min, 50-60 min, last 10 min
Large Volume	Chlorine Turbidity	first 10 min, 50-60 min, last 10 min
Well Dev/Rehab	Chlorine Turbidity	first 10 min, 50-60 min, last 10 min
Small Volume/Other	None required	N/A

7) Effluent limitations must be monitored not to exceed per the following table:

Measure	Method	Limit
Chlorine	Field Measure	0.10 mg/L-Cl
Turbidity	Visual Estimate	20 NTU for inland waters 225 NTU for ocean 100 NTU for wells
pH	Field Meausre	6.5 - 8.5

APPENDIX H

SAMPLE OF PUBLIC NOTICE

FOR SAMPLE REFERENCE ONLY

The City of SAN DIEGO

CONSTRUCTION NOTICE

PROJECT TITLE

Work on your street will begin within one week to replace the existing water mains servicing your community.

The work will consist of:

- Saw-cutting and trench work on Ingulf Street from Morena Boulevard to Galveston Street to install new water mains, water laterals and fire hydrants.
- Streets where trenching takes place will be resurfaced and curb ramps will be upgraded to facilitate access for persons with disabilities where required.
- This work is anticipated to be complete in your community by December 2016.

How your neighborhood may be impacted:

- Water service to some properties during construction will be provided by a two-inch highline pipe that will run along the curb. To report a highline leak call 619-515-3525.
- Temporary water service disruptions are planned. If planned disruptions impact your property, you will receive advance notice.
- Parking restrictions will exist because of the presence of construction equipment and materials.
- "No Parking" signs will be displayed 72 hours in advance of the work.
- Cars parked in violation of signs will be TOWED.

Hours and Days of Operation:

Monday through Friday X:XX AM to X:XX PM.

City of San Diego Contractor:

Company Name, XXX-XXX-XXXX

To contact the City of San Diego: SD Public Works

619-533-4207 | engineering@sandiego.gov | sandiego.gov/CIP

This information is available in alternative formats upon request.

The City of SAN DIEGO

CONSTRUCTION NOTICE

PROJECT TITLE

Work on your street will begin within one week to replace the existing water mains servicing your community.

The work will consist of:

- Saw-cutting and trench work on Ingulf Street from Morena Boulevard to Galveston Street to install new water mains, water laterals and fire hydrants.
- Streets where trenching takes place will be resurfaced and curb ramps will be upgraded to facilitate access for persons with disabilities where required.
- This work is anticipated to be complete in your community by December 2016.

How your neighborhood may be impacted:

- Water service to some properties during construction will be provided by a two-inch highline pipe that will run along the curb. To report a highline leak call 619-515-3525.
- Temporary water service disruptions are planned. If planned disruptions impact your property, you will receive advance notice.
- Parking restrictions will exist because of the presence of construction equipment and materials.
- "No Parking" signs will be displayed 72 hours in advance of the work.
- Cars parked in violation of signs will be TOWED.

Hours and Days of Operation:

Monday through Friday X:XX AM to X:XX PM.

City of San Diego Contractor:

Company Name, XXX-XXX-XXXX

To contact the City of San Diego: SD Public Works

619-533-4207 | engineering@sandiego.gov | sandiego.gov/CIP

This information is available in alternative formats upon request.

APPENDIX I

ADVANCED METERING INFRASTRUCTURE (AMI) DEVICE PROTECTION

Protecting AMI Devices in Meter Boxes and on Street Lights

The Public Utilities Department (PUD) has begun the installation of the Advanced Metering Infrastructure (AMI) technology as a new tool to enhance water meter reading accuracy and efficiency, customer service and billing, and to be used by individual accounts to better manage the efficient use of water. **All AMI devices shall be protected per Section 402-2, "Protection", of the 2021 Whitebook.**

AMI technology allows water meters to be read electronically rather than through direct visual inspection by PUD field staff. This will assist PUD staff and customers in managing unusual consumption patterns which could indicate leaks or meter tampering on a customer's property.

Three of the main components of an AMI system are the:

A. Endpoints, see Photo 1:

Photo 1

B. AMI Antenna attached to Endpoint (antenna not always required), see Photo 2:

Photo 2

100W+ ERT Module with TTL antenna

Network Devices, see Photo 3:

Photo 3

AMI endpoints transmit meter information to the AMI system and will soon be on the vast majority of meters in San Diego. These AMI devices provide interval consumption data to the PUD's Customer Support Division. If these devices are damaged or communication is interrupted, this Division will be alerted of the situation. The endpoints are installed in water meter boxes, coffins, and vaults adjacent to the meter. A separate flat round antenna may also be installed through the meter box lid. This antenna is connected to the endpoint via cable. The following proper installation shall be implemented when removing the lid to avoid damaging the antenna, cable, and/or endpoint. Photo 4 below demonstrates a diagram of the connection:

Photo 4

The AMI device ERT/Endpoint/Transmitter shall be positioned and installed as discussed in this Appendix. If the ERT/Endpoint/Transmitter is disturbed, it shall be re-installed and returned to its original installation with the end points pointed upwards as shown below in Photo 5.

The PUD's code compliance staff will issue citations and invoices to you for any damaged AMI devices that are not re-installed as discussed in the Contract Document
Photo 5 below shows a typical installation of an AMI endpoint on a water meter.

Photo 5

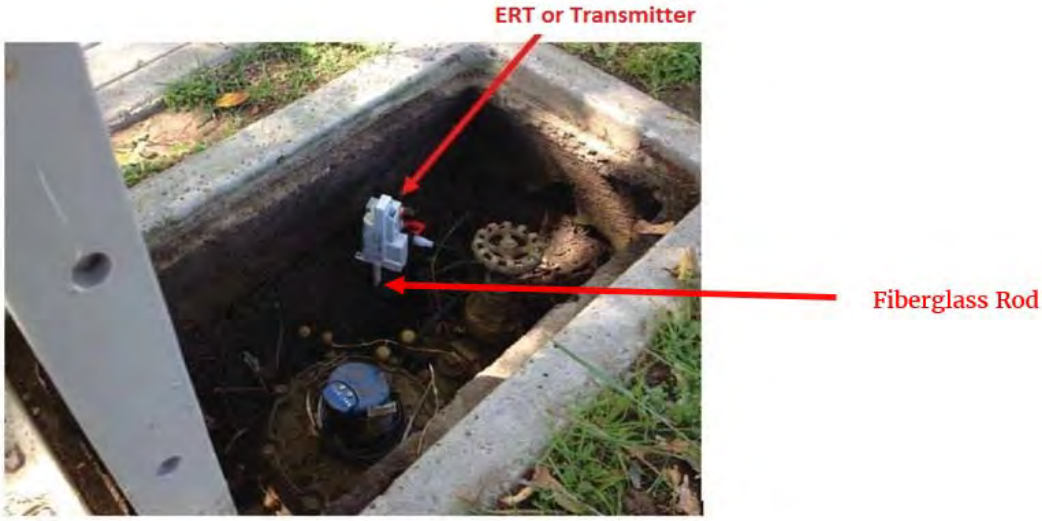

Photo 6 below is an example of disturbance that shall be avoided:

Photo 6

You are responsible when working in and around meter boxes. If you encounter these endpoints, use proper care and do not disconnect them from the registers on top of the water meter. If the lid has an antenna drilled through, do not change or tamper with the lid and inform the Resident Engineer immediately about the location of that lid. Refer to Photo 7 below:

Photo 7

Another component of the AMI system are the Network Devices. The Network Devices are strategically placed units (mainly on street light poles) that collect interval meter reading data from multiple meters for transmission to the Department Control Computer. **If you come across any of these devices on street lights that will be removed or replaced (refer to Photos 8 and 9 below), notify AMI Project Manager Arwa Sayed at (619) 362-0121 immediately.**

Photo 8 shows an installed network device on a street light. On the back of each Network Device is a sticker with contact information. See Photo 9. **Call PUD Water Emergency Repairs at 619-515-3525 if your work will impact these street lights.** These are assets that belong to the City of San Diego and you shall be responsible for any costs of disruption of this network.

Photo 8

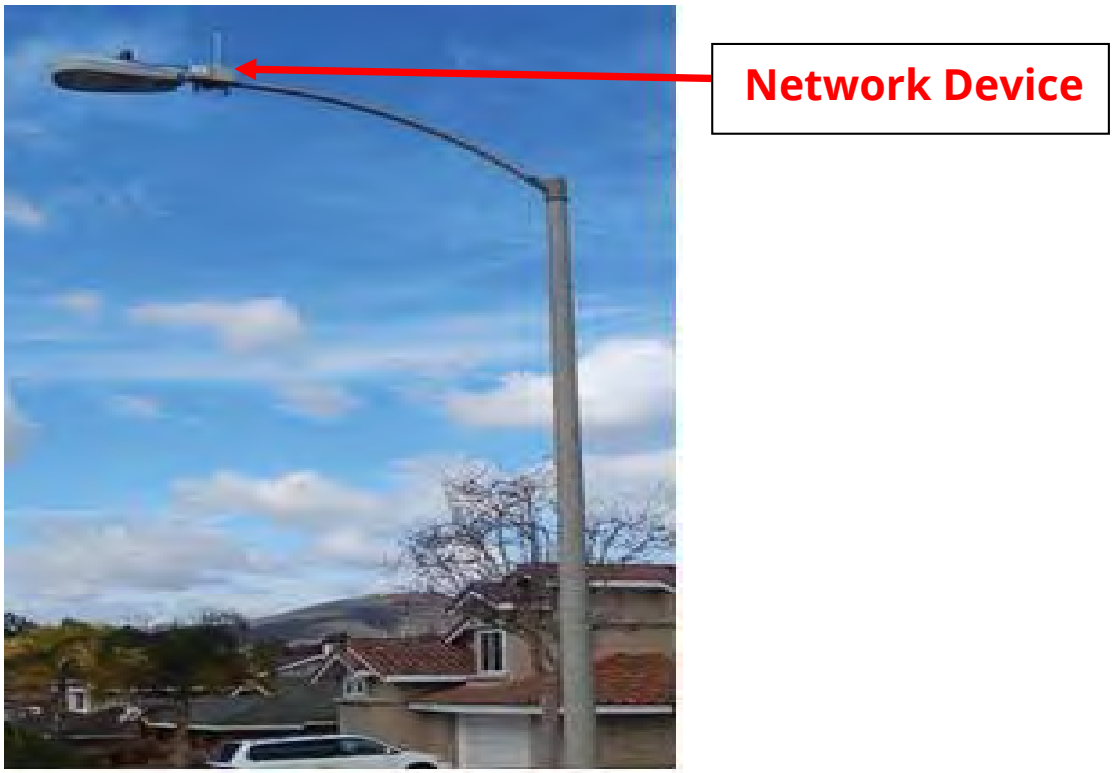

Photo 9

If you encounter any bad installations, disconnected/broken/buried endpoints, or inadvertently damage any AMI devices or cables, notify the Resident Engineer immediately. The Resident Engineer will then immediately contact the AMI Project Manager, Arwa Sayed, at (619) 362-0121.

APPENDIX J

LCP TRACKER THIRD PARTY USER AGREEMENT AND FORMS

Third Party User Agreement

LCPtracker, Inc., a California corporation with a place of business located at 117 East Chapman, Orange, California 92866 **("LCPtracker"),** and **Parsons-Black & Veatch Joint Venture,** a joint venture governed by the laws of the state of California ("**Parsons B&V JV**") are willing to provide you, [*NAME OF CONTRACTOR/CONSULTANT*] _____with a place of business located at [*ADDRESS OF CONTRACTOR/CONSULTANT*] _____ **("Third Party User")** with a limited license (subject to the terms of this Agreement) to the Licensed Software Services (as defined below), pursuant to the Master Subscription Software as a Service License Agreement between Parsons B&V JV and LCPtracker dated March 5, 2021 (the "**Master Agreement**"), but only on the condition that Third Party User accepts and complies with all the terms in this Third Party User Agreement (this **"Agreement"**) which is entered into as of *[insert date of signature by Contractor/Consultant*]_____, 2021 (the "**Effective Date**") and governs the license and use of Licensed Software Services (defined below). LCPtracker and Third Party User therefore agree as follows:

1. DEFINITIONS.

"Affiliate" means any entity which directly or indirectly controls, is controlled by, or is under common control with the subject entity. "Control," for purposes of this definition, means direct or indirect ownership or control of more than fifty percent (50%) of the voting interests of the subject entity.

"**Applicable Law**" means all federal, state, local and other laws, rules and regulations, ordinances, interpretive letters and other official releases of or by any governmental authority, decrees, orders and codes as the same are promulgated, supplemented and or amended from time to time and as are, or may be, applicable to a Party's performance of its obligations under the Agreement, including any applicable law relating to the privacy or processing , protection, collection, use, disclosure or distributions of personally identifiable information or personally identifiable healthcare information about an individual as more particularly described in any such applicable law. "Applicable Law" includes, without limitation, the California Privacy Rights Act.

"Third Party Data" means all Third Party User's or its Users' electronic data or information entered into any Licensed Software Services.

"Documentation" means the online user guides, training material and other documentation for the applicable Licensed Software Services, accessible via login and updated from time to time.

"Licensed Software Services" means any LCPtracker software as a service products and related services that are provided to Third Party User (and listed at Exhibit 1) by LCPtracker or Parsons B&V JV online, including associated offline components, as described in the Documentation. "Licensed Software Services" excludes non-LCPtracker applications and Licensed Software Services are only to be used for the certain Pure Water Program projects detailed in Exhibit 1 (the "**Pure Water Projects**").

"Malicious Code" means viruses, worms, time bombs, Trojan horses and other harmful or malicious code, files, scripts, agents or programs.

“Subscription Term” means the applicable license term detailed at Exhibit 1.

"Users" means persons or entities who are authorized by Third Party User to use the Licensed Software Services for the Pure Water Projects pursuant to a Licensed Software Schedule, and who have been entered as a user in the Licensed Software Services by Third Party User, Parsons B&V JV, or LCPtracker, and is listed as a subcontractor to Third Party User in the Licensed Software Services. Users include Third Party User (or User) employees, consultants, contractors and agents. Use of the Licensed Software Services is solely for the benefit of Third Party User and its Users for the Pure Water Projects, and Third Party User remains liable for any breach by itself or any of its Users of the terms of this Agreement (which Users are governed in their use of the Licensed Software Services in the same way as Third Party is governed hereunder). For the avoidance of doubt, any persons or entities who are authorized by Third Party User to use the Licensed Software Services are Users. Third Party User must ensure that Users not share their user identification or passwords.

2. SUBSCRIPTION LICENSED SOFTWARE SERVICES

2.1. Provisions of Licensed Software Services. LCPtracker shall make the Licensed Software Services available to Third Party User pursuant to this Agreement during the Subscription Term specified in Exhibit 1.

2.2. Limitations. Licensed Software Services are licensed and not purchased. All rights not expressly granted herein are reserved by LCPtracker and/or its licensors and/or suppliers. Without limiting the generality of the preceding sentence, Third Party User receives no rights and will not: (i) modify , port, translate, localize or create derivative works based on the Licensed Software Services, (ii) use, copy, rent, lease, market, distribute or sublicense the Licensed Software Services except as otherwise permitted hereunder; (iii) reverse engineer, decompile, or disassemble the Licensed Software Services; (iv) disclose the results of benchmark or other performance test run on the Licensed Software Services to any third party without LCPtracker’s prior written consent (which results are LCPtracker Confidential Information). This Agreement grants no additional express or implied license, right or interest in any copyright, patent, trade secret, trademark, invention or other intellectual property right of LCPtracker. Third Party User will not remove, or allow to be removed, any LCPtracker copyright, trade secret or other proprietary rights notice from any LCPtracker product.

3. USE OF THE SERVICES

3.1. Third Party User Responsibilities. Third Party User may permit any number of Users (unless otherwise set forth in Exhibit 1) to use the Licensed Software Services for the purposes of uploading the appropriate data for Third Party User’s use for the specified Pure Water Projects in accordance with Exhibit 1. Each User shall access and use the Licensed Software Services (i) in accordance with the terms of this Agreement, Exhibit 1 and the Documentation, and (ii) through a unique and reasonably secure username and password. If a two-factor authentication login system is provided, it is required to be used. Third Party User shall (i) be responsible for the administration of user identifications and passwords and it’s Users' compliance with this Agreement and shall require Users to acknowledge their understanding of and compliance with the restrictions and responsibilities related to the use of the Licensed Software Services, including, without limitation, protecting their user identification and passwords; (ii) use commercially reasonable efforts to prevent unauthorized access to or use of the Licensed Software Services, and notify LCPtracker promptly of any such unauthorized access or use, and (iii) use the Licensed Software Services only in accordance with the Documentation, Applicable Laws. Third Party User shall not (a) make the Licensed Software Services available to anyone other than Users, (b) sell, resell, rent or lease the Licensed Software

Services, (c) use the Licensed Software Services to store or transmit infringing, libelous, or otherwise unlawful or tortious material, or to store or transmit material in violation of third-party privacy rights, (d) use the Licensed Software Services to store or transmit Malicious Code, (e) interfere with or disrupt the integrity or performance of the Licensed Software Services or third-party data contained therein, or (f) attempt to gain unauthorized access to the Licensed Software Services or their related systems or networks. Third Party User is solely responsible for its and its Users' legal compliance in its use of the Licensed Software Services and LCPtracker shall have no liability for Third Party Users, or the Users' input or implementation of the Licensed Software Services.

4. [*INTENTIONALLY OMITTED*]

5. PROPRIETARY RIGHTS

5.1. Reservation of Rights in Licensed Software Services. Subject to the limited rights expressly granted hereunder, LCPtracker reserves all rights, title and interest in and to Licensed Software Services and its underlying software covered by this Agreement, including but not limited to all related intellectual property rights. No rights are granted to Third Party User hereunder other than as expressly set forth herein. The Licensed Software Services are licensed and not sold to Third Party User. Third Party User is granted a limited, revocable, non-transferable (except in accordance with this Agreement) and non-exclusive right to access and use the specified Licensed Software Services solely for the Third Party User's internal business purposes, subject to the terms and conditions of this Agreement, the LCPtracker documentation and Exhibit 1 for the applicable Subscription Term(s).

5.2. Restrictions. In addition to the restrictions set forth in Section 3 above, Third Party User shall not (i) permit any third party to access the Licensed Software Services except as permitted herein, (ii) create derivate works based on the Licensed Software Services, (iii) copy, frame or mirror any part or content of the Licensed Software Services, (iv) reverse engineer the Licensed Software Services, or (v) access the Licensed Software Services in order to (a) build a competitive product or service, or (b) copy any features, functions or graphics of the Licensed Software Services.

5.3. Suggestions. Any suggestions, enhancement requests, recommendations or other feedback relating to the operation of the Licensed Software Services provided by Third Party User or its Users ("**Feedback**"), during and after the Subscription Term is and remains the intellectual property of LCPtracker and LCPtracker has all rights therein to exploit and commercialize any Feedback as LCPtracker chooses without compensation or other consideration to Third Party User or its Users.

5.4. Federal Government End Use Provisions. LCPtracker provides the Licensed Software Services, including related software and technology, for ultimate federal government end use solely in accordance with the following: Government technical data and software rights related to the Licensed Software Services include only those rights customarily provided to the public as defined in this Agreement. This customary commercial license is provided in accordance with FAR 12.211 (Technical Data) and FAR 12.212 (Software) and, for Department of Defense transactions, DFAR 252.227-7015 (Technical Data - Commercial Items) and DFAR 227.7202-3 (Rights in Commercial Computer Software or Computer Software Documentation). If a government agency has a need for rights not conveyed under these terms, it must negotiate with LCPtracker to determine if there are acceptable terms for transferring such rights, and a mutually acceptable written addendum specifically conveying such rights must be included in any applicable contract or agreement.

5.5. Service Provider. Use of Third Party Data. LCPtracker, as a service provider on behalf of Third Party User, shall not access, use, process or retain Third Party Data except as necessary to perform its obligations under this Agreement and Exhibit 1 or as otherwise in strict accordance with the written instructions of Third Party User except and only to the extent that such Third Party Data is deidentified or in the aggregate and such is prevented from being re-identified and accessed or acquired by unauthorized parties. Upon termination of Licensed Software Services, LCPtracker shall comply with Third Party User's direction as set forth in Section 11.1. "Termination." All Licensed Software Services that are provided depend on the accuracy of information submitted by Third Party User or its Users. LCPtracker is not responsible for any errors due to inaccurate information.

6. CONFIDENTIALITY

6.1. Definition of Confidential Information. As used herein, **"Confidential Information"** means all information disclosed by a party **("Disclosing Party")** to the other party **("Receiving Party"),** whether orally or in writing, that is designated as confidential or that reasonably should be understood to be confidential given the nature of the information and the circumstances of disclosure. Third Party User Confidential Information shall include Third Party Data; LCPtracker Confidential Information shall include all Licensed Software Services; and Confidential Information of each party shall include the terms and conditions of this Agreements, as well as business and marketing plans, technology and technical information, product plans, pricing and designs, and business processes disclosed by such party. However, Confidential Information (other than Third Party Data) shall not include any information that (i) is or becomes generally known to the public without breach of any obligation owed to the Disclosing Party, (ii) was known to the Receiving Party prior to its disclosure by the Disclosing Party without breach of any obligation owed to the Disclosing Party, (iii) is received from a third party without breach of any obligation owed to the Disclosing Party, or (iv) was independently developed by the Receiving Party without access or reference to the Disclosing Party's Confidential Information.

6.2. Protection of Confidential Information. The Receiving Party shall (i) use the same degree of care that it uses to protect the confidentiality of its own confidential information of like kind (but in no event less than reasonable care), (ii) not use any Confidential Information of the Disclosing Party for any purpose outside the scope of this Agreement, and (iii) except as otherwise authorized by the Disclosing Party in writing, limit access to Confidential Information of the Disclosing Party to those of its and its Affiliates' employees, contractors and agents who need such access for purposes consistent with this Agreement and who have signed confidentiality agreements with the Receiving Party containing protections no less stringent than those contained herein. Neither party shall disclose the terms of this Agreement to any third party other than its Affiliates that have a need to know and their legal counsel and accountants without the other party's prior written consent.

6.3. Compelled Disclosure. The Receiving Party may disclose Confidential Information of the Disclosing Party if it is compelled by law to do so, provided the Receiving Party gives the Disclosing Party prior notice of such compelled disclosure (to the extent legally permitted) and reasonable assistance, at the Disclosing Party's cost, if the Disclosing Party wishes to contest the disclosure. If the Receiving Party is compelled by law to disclose the Disclosing Party's Confidential Information as part of a civil proceeding to which the Disclosing Party is a party, and the Disclosing Party is not contesting the disclosure, the Disclosing Party will reimburse the Receiving Party for its reasonable cost of compiling and providing secure access to such Confidential Information.

7. WARRANTIES AND DISCLAIMERS

7.1. Warranties. LCPtracker warrants that (i) LCPtracker has validly entered into this Agreement and has the legal power to do so, (ii) the Licensed Software Services shall perform materially in accordance with the Documentation, (iii) LCPtracker will not transmit Malicious Code to Third Party User, provided it is not a breach of this subpart (iii) if Third Party User or a User uploads a file containing Malicious Code into the Licensed Software Services and later downloads that file containing Malicious Code. For any breach of a warranty above, Third Party User exclusive remedy shall be as provided in Section 11.1 (Termination for Cause).

7.2. Third Party User Warranties. Third Party User represents and warrants that Third Party User has all rights and necessary authority to enter into this Agreement and the person signing this Agreement on behalf of Third Party User has the necessary authority to do so. Third Party User acknowledges that Third Party User is solely responsible for the content uploaded into the Licensed Software Services included in Third Party Data or by any User authorized by Third Party User and warrants that Third Party User shall comply with all Applicable Law with regard to its use of the Licensed Software Services and content and shall require all Users to acknowledge and agree to the use obligations and restrictions under this Agreement. The parties acknowledge and agree that during the term of this Agreement, Third Party User or other third parties on its behalf may disclose certain Third Party Data, including personally identifiable data regarding employees or other individuals, to LCPtracker for the benefit of Third Party User and Parsons B&V JV. Third Party User represents and warrants to LCPtracker that: (i) each of Third Party User and such other third parties are authorized to collect, use and disclose the Third Party Data to LCPtracker for use and storage pursuant to this Agreement; (ii) such disclosure, use or storage does not and shall not violate Applicable Law (including for the avoidance of doubt all privacy rules including the CCPA and CPRA), the rights of any third party or, if applicable, such Third Party User's agreements with or privacy notices to individuals with respect to whom the Third Party Data relates; and (iii) Third Party User shall not request LCPtracker to use, store, disclose or otherwise process Third Party Data in any manner that would not be permissible under Applicable Law or, if applicable, Third Party User's agreements with or privacy notices to individuals with respect to whom the Third Party Data relates, if done by Third Party User.

7.4. Third Party User Obligations. Third Party User shall: (i) safeguard the usernames, passwords and other security data, methods and devices furnished by Parsons B&V JV or LCPtracker to Third Party User in connection with the Service and prevent unauthorized access to or use of the Service and promptly notify LCPtracker or Parsons B&V JV if it becomes aware of any such unauthorized access or that the security of its usernames or passwords has been compromised; (ii) be responsible for Third Party User networks, equipment and system security required or appropriate in connection with the Service; and (iii) have sole responsibility for the accuracy, quality, integrity, legality, reliability and appropriateness of all Third Party Data.

7.3. Disclaimer. EXCEPT AS EXPRESSLY PROVIDED HEREIN, LCPTRACKER MAKES NO OTHER WARRANTIES OF ANY KIND, WHETHER EXPRESS, IMPLIED, STATUTORY OR OTHERWISE, AND SPECIFICALLY DISCLAIMS ALL IMPLIED WARRANTIES, INCLUDING ANY WARRANTIES OF MERCHANTABILITY OR FITNESS FOR A PARTICULAR PURPOSE, TO THE MAXIMUM EXTENT PERMITTED BY APPLICABLE LAW.

8. MUTUAL INDEMNIFICATION

8.1. Indemnification by LCPtracker. LCPtracker shall defend Third Party User against any claim, demand, suit, or proceeding made or brought against Third Party User by a third party alleging that the use of the Licensed Software Services as permitted hereunder infringes or misappropriates the intellectual property rights of a third party (a **"Claim Against Third Party User**"), and shall indemnify Third Party User for any damages, reasonable attorney fees and costs finally awarded against Third Party User as a result of, and for amounts paid by Third Party User under a court-approved settlement of a Claim Against Third Party User; provided that Third Party User (a) promptly provides LCPtracker written notice of the Claim Against Third Party User; (b) allows LCPtracker sole control of the defense and settlement of the Claim Against Third Party User (provided that LCPtracker may not settle any Claim Against Third Party User unless the settlement unconditionally releases Third Party User of all liability); and (c) provides to LCPtracker all reasonable assistance, at LCPtracker's expense. In the event of a Claim Against Third Party User, or if LCPtracker reasonably believe the Licensed Software Services may infringe or misappropriate a third party's intellectual property rights, LCPtracker may, in LCPtracker's sole discretion and at no cost to Third Party User, **(i)** modify the Licensed Software Services so that they are no longer infringing, without breaching LCPtracker warranties under "LCPtracker Warranties" above, (ii) obtain a license for Third Party User's continued use of the Licensed Software Services in accordance with this Agreement, or (iii) if neither of the foregoing is commercially practicable despite LCPtracker using all reasonable efforts and if Third Party User is not permitted to continue using the Licensed Software Services, then this Agreement will terminate with respect to such infringing Licensed Software Services.

8.2. Indemnification by Third Party User. Third Party User shall defend LCPtracker against any claim, demand, suit or proceeding made or brought against LCPtracker by a third party alleging that Third Party Data, or Third Party User's or its Users' use of the Licensed Software Services in a manner not permitted hereunder (i) infringes or misappropriates the intellectual property rights of a third party or (ii) violates Applicable Law (a **"Claim Against LCPtracker**"), and shall indemnify LCPtracker for any damages, attorney fees and costs finally awarded against LCPtracker as a result of, or for any amounts paid by LCPtracker under a court-approved settlement of, a Claim Against LCPtracker; provided that LCPtracker (a) promptly give Third Party User written notice of the Claim Against LCPtracker; (b) give Third Party User sole control of the defense and settlement of the Claim Against LCPtracker (provided that Third Party User may not settle any Claim Against LCPtracker unless the settlement unconditionally releases LCPtracker of all liability); and (c) provide to Third Party User all reasonable assistance, at Third Party User expense.

8.3. Exclusive Remedy. THIS SECTION 8 STATES THE INDEMNIFYING PARTY'S SOLE LIABILITY TO, AND THE INDEMNIFIED PARTY'S EXCLUSIVE REMEDY AGAINST, THE OTHER PARTY FOR ANY TYPE OF CLAIM DESCRIBED IN THIS SECTION.

9. LIMITATION OF LIABILITY

9.1. Limitation of Liability. LCPTRACKER'S LIABILITY ARISING OUT OF OR RELATED TO THIS AGREEMENT OR ANY SCHEDULE HEREUNDER (WHETHER IN CONTRACT OR TORT OR UNDER ANY OTHER THEORY OF LIABILITY) SHALL NOT EXCEED $25,000.

9.2. Exclusion of Consequential and Related Damages. EXCEPT FOR (i) A BREACH OF THE LICENSE GRANT HEREUNDER BY THIRD PARTY USER, (ii) A BREACH OF THE CONFIDENTIALITY OBLIGATIONS BY EITHER PARTY, (iii) DEATH, PERSONAL INJURY OR TANGIBLE PROPERTY DAMAGE CAUSED BY A PARTY, (iv) VIOLATION OF LAW OR (v) A PARTY'S INDEMNIFICATION OBLIGATIONS (COLLECTIVELY, THE "EXCLUSIONS"), IN NO

OTHER EVENT SHALL EITHER PARTY HAVE ANY LIABILITY TO THE OTHER PARTY FOR ANY INDIRECT, SPECIAL, INCIDENTAL OR, CONSEQUENTIAL DAMAGES HOWEVER CAUSED, WHETHER IN CONTRACT, TORT OR UNDER ANY OTHER THEORY OF LIABILITY, AND WHETHER OR NOT THE PARTY HAS BEEN ADVISED OF THE POSSIBILITY OF SUCH DAMAGES. NOTWITHSTANDING THE FOREGOING, IN NO EVENT, INCLUDING WITH REGARD TO THE EXCLUSIONS, SHALL EITHER PARTY BE LIABLE TO THE OTHER FOR ANY LOST PROFITS OR REVENUES OR, COVER OR PUNITIVE DAMAGES HOWEVER CAUSED, WHETHER IN CONTRACT, TORT OR UNDER ANY OTHER THEORY OF LIABILITY, AND WHETHER OR NOT THE PARTY HAS BEEN ADVISED OF THE POSSIBILITY OF SUCH DAMAGES. THE FOREGOING DISCLAIMERS SHALL NOT APPLY TO THE EXTENT PROHIBITED BY APPLICABLE LAW.

10. TERM

10.1. Term of Agreement. This Agreement commences on the date of this Agreement and continues until termination as provided below, or upon termination of the Master Agreement, whichever occurs first.

11. TERMINATION

11.1. Termination for Cause. LCPtracker may terminate this Agreement (i) effective immediately upon written notice to Third Party User if Parsons B&V JV directs LCPtracker to cease providing Third Party User access to the Service, and (ii) effective immediately upon written notice to Third Party User if Third Party User or one of its Users materially breaches this Agreement and such breach is incapable of cure, or with respect to a material breach capable of cure, Third Party User does not cure such breach within 30 days after receipt of written notice of such breach.

11.2. Automatic Termination and Actions Following. In addition, this Agreement shall terminate immediately and automatically upon (i) any termination or expiration of the Master Agreement or (ii) the termination or expiration of a License Product Schedule under which the license for the Licensed Software Services in Exhibit 1 is granted. Upon any termination or expiration of this Agreement, Third Party User and its Users shall no longer be permitted to use the Licensed Software Services and Third Party User shall destroy or return (as directed by LCPtracker) all Confidential Information of LCPtracker (including Documentation) related to such Exhibit 1 and an officer of Third Party User shall certify the same in writing within thirty (30) days of such termination.

11.2. Surviving Provisions. All Sections intended by their nature to survive termination, including, without limitation, Section 6 "Confidentiality", shall survive any termination or expiration of this Agreement.

12. GOVERNING LAW AND JURISDICTION

12.1. General. Each party agrees that this Agreement shall be governed by and construed under the laws of the State of California without regard to the conflicts of law provisions thereof, or any other provisions which would result in the application of a different body of law and to the exclusive jurisdiction of the applicable courts for San Diego County, California. The parties agree that the United Nations Convention on Contracts for the International Sales of Goods is expressly excluded from this Agreement.

13. GENERAL PROVISIONS

13.1. Notices. Any notice required or permitted to be delivered pursuant to this Agreement, and any permission and approval required hereunder shall be in writing and shall be deemed to have been given: (i) upon delivery, if delivered in person, (ii) upon electronic confirmation of

delivery if sent by electronic mail, or (iii) three (3) business day after deposit in the United States mail, registered or certified mail, return receipt requested, postage prepaid, in each case addressed to the addressee set out in the first paragraph of this Agreement or to such other address as may be specified by either Party hereto upon notice given to the other Party in accordance with this Section.

13.2. Severability. If a provision of the Agreement or portion thereof is found to be invalid or unenforceable under Applicable Law, it shall be, to the extent practicable, conformed to meet the original intention of the parties, and shall not invalidate the remainder of such provision or the remaining provisions of the Agreement.

13.3. Export Compliance. The Licensed Software Services and other technology the LCPtracker makes available, and derivatives thereof may be subject to export laws and regulations of the United States and other jurisdictions. Third Party User shall not, and further shall not permit Users to, access or use Services in a U.S.- embargoed country or in violation of any U.S. export law or regulation.

13.4. Anti-Corruption. Third Party User acknowledges that it has not received or been offered any illegal or improper bribe, kickback, payment, gift, or thing of value from any LCPtracker employees or agents in connection with this Agreement. Reasonable gifts and entertainment provided in the ordinary course of business do not violate the above restriction. If Third Party User learns of any violation of the above restriction, Third Party User will use reasonable efforts to promptly notify LCPtracker in writing.

13.5. Relationship of the Parties. The parties are independent contractors. This Agreement does not create a partnership, franchise, joint venture, agency, fiduciary or employment relationship between the parties.

1.

2.

3.

4.

13.6. No Third-Party Beneficiaries. There are no third-party beneficiaries to this Agreement.

13.7. Waiver. No failure or delay by either party in exercising any right under this Agreement constitute a waiver of that right.

13.8. Attorney Fees. The prevailing party shall be entitled to all expenses, including attorneys' fees and costs, incurred in connection with any dispute hereunder including mediation, arbitration, lawsuit, appeal, bankruptcy proceedings or other actions.

13.9. Assignment. Neither party may assign any of its rights or obligations hereunder, whether by operation of law or otherwise, without the prior written consent of the other party (not to be unreasonably withheld). Notwithstanding the foregoing, either party may assign this Agreement in its entirety, without consent of the other party, to its Affiliate or in connection with a merger, acquisition, corporate reorganization, or sale of all or substantially all of its assets not involving a direct competitor of the other party, provided that the assignee agrees in writing to be bound by the terms of this Agreement. A party's sole remedy for any purported assignment by the other party in breach of this paragraph shall be, at the non-assigning party's election, termination of this Agreement upon written notice to the assigning party.

13.10. Entire Agreement. This Agreement, including all exhibits and addenda hereto, constitutes the entire agreement between the parties and supersedes all prior and contemporaneous agreements, proposals or representations, written or oral, concerning its subject matter. No modification, amendment, or waiver of any provision of this Agreement shall be effective unless in writing and either signed or accepted electronically by the party against whom the modification, amendment or waiver is to be asserted. However, to the extent of any conflict or inconsistency between the provisions in the body of this Agreement and any exhibit or addendum hereto, the terms of such exhibitor addendum. Notwithstanding any language to the contrary therein, no terms or conditions stated in a Third Party User purchase order or other order documentation shall be incorporated into or form any part of this Agreement, and all such terms or conditions shall be null and void.

13.11. Counterparts; Electronically transmitted Documents and Signatures. This Agreement may be executed in one or more counterparts; each of which shall be deemed an original and all of which together shall constitute one and the same instrument, it being understood that the Parties need not sign the same counterpart. An electronic signature or a manual signature on this Agreement which image, in either case is transmitted electronically, shall constitute an original signature for all purposes. The delivery of this Agreement, including signature pages may be transmitted or exchanged by the Parties by way of exchanging (a) signed originals, (b) facsimile transmission, (c) by any other electronic means intended to preserve the original graphic and pictorial appearance of a document, including sending in portable document format (pdf) via email, or (d) any combination of any such means, and the Parties hereby adopt as original any such documents received. Delivery of such documents by facsimile or by any other electronic means shall have the same effect as physical delivery of the paper bearing the original signature.

[*SIGNATURES BEGIN ON THE FOLLOWING PAGE*]

IN WITNESS WHEREOF, authorized representatives of the parties have executed this Agreement effective as of the Effective Date defined above.

LCPtracker, Inc.	THIRD PARTY USER: [Name of 3rd Party User]
By: _____	By: _____
Name: _____	Name: _____
Title:_____	Title: _____
Date: _____	Date: _____

EXHIBIT 1

Limited use license in accordance with the Agreement for the following construction project**: Pure Water Program (PWP) Central Area Small-Scale Facility** (the "**Pure Water Projects**")

Name of Software	**License Duration**
LCPtracker Pro	From activation in the Licensed Software Services until termination by Parsons B&V JV or LCPtracker with 30 days notice to Third Party User, or the date of termination of the Master Agreement, whichever occurs first.

For the avoidance of doubt, the only Users that are permitted to use the Licensed Software Services are those working on the Pure Water Projects.

AUTHORIZED SIGNATORY

Project Name: _____

Bid Number: _____

Company: _____

Address: _____

City, State, Zip: _____

Date: _____

This correspondence is to affirm that the person(s) identified below have the authority under penalty of perjury to so affirm, that the records are originals or are full, true, and correct copies of the original and depict truly, fully and correctly, the craft or type of work performed, hours and days worked, and the amounts by category listed, disbursed by way of cash, check, or in whatever form or manner to each person by job classification and/or skill pursuant to a public works contract. **To affirm signatory authorization, or to delegate signatory authorization, the person identified below must be owners or officers of the company. If delegating signatory authorization, both names must appear and remain current.**

Print Name of Authorized Signatory Owner/Officer	Print Name of Approved Authorized Signatory
Signature of Authorized Signatory	Signature of Authorized Signatory
Title of Authorized Signatory	Title of Authorized Signatory

If authorization changes resubmit form with signature to LCP Tracker

List of Trades/Crafts Instructions

All contractors working on projects subject to prevailing wage requirements should submit to the City's Prevailing Wage Unit:

1) List of crafts and/or trades for work to be performed by your firm and each subcontractor.

Example:

ACCEPTABLE

TRADE/CRAFT	CLASSIFICATION	DETERMINATION NUMBER
LABORER	Laborer: Engineering Construction Group 1	SD-23-102-3-2014-2
OPERATING ENGINEER	OPERATING ENGINEER Group 12	SD-23-63-3-2016-1
CARPENTER	Carpenter (Heavy and Highway Work)	SD-23-31-4-2015-2
LABORER	Laborer (Engineer Construction) Period 4	2016-2

NOT ACCEPTABLE

TRADE/CRAFT	CLASSIFICATION	DETERMINATION NUMBER
LABORER	Laborer Engineering	2014-2
CARPENTER	Carpenter	SD-23-31-4-2015-2
	Apprentice	2016-2
	Plastering	

2) The name, contact person, business address, telephone (including area code) and e-mail address for the prime contractor and each subcontractor along with the specific dollar amount of each subcontract. If different from the specified business address, provide address and telephone number of the facility where payroll records are located and maintained. Also, please provide the anticipated start and end dates for each contractor.

NOTE: You must list all subcontractors, vendors, and suppliers, regardless of dollar amount and tier level.

The City of SAN DIEGO

List of Trades/Crafts

Project Title: _____

Bid Number: _____

Contractor: _____

Indicate Role: ☐ Prime Contractor

☐ Subcontractor

☐ Tier Subcontractor *If tier sub, indicate prime* _____

Contact: _____ **Phone:** _____

Email: _____

Address: _____

Anticipated Start Date: _____ **Dollar Amount:** _____

Anticipated End Date: _____

TRADE/CRAFT	CLASSIFICATION	DETERMINATION NUMBER

LABOR COMPLIANCE CHECKLIST

California Code of Regulations Title 8, Section 16421

MUST BE FILLED OUT BY ALL CONTRACTORS OF ALL TIERS

The federal and state labor law requirements applicable to the contract are composed of but not limited to the following items:

Payment of Prevailing Wages:
The contractor to whom the contract is awarded, and its subcontractors hired for the public works project are required to pay not less than the specified general prevailing wage rates to all workers employed in the execution of the contract. (Labor Code Section 177 et seq.)

The contractor is responsible for ascertaining and complying will all current general prevailing wage rates for crafts and any rate changes that occur during the life of the contract. Information on all prevailing wage rates are to be posted at the jobsite for all workers to view. Current wage rate information can be found at the DLSR website.

Apprentices:
It is the duty of the contractor and subcontractors to employ registered apprentices on the public works project and to comply with all aspects of Labor Code Section 1777.5, relating to Apprentice on Public Works. (1) Notify approved apprenticeship programs of contract award; (2) employ apprentices; (3) pay training fund contributions.

Penalties:
There are penalties required for contractor/subcontractor's failure to pay prevailing wages and for failure to employ apprentices, including forfeitures and debarment under Labor Code Sections 1775; 1776; 1777.1; 1777.7 and 1813.

Certified Payroll Reports:
Under Labor Code Section 1776, contractors and subcontractors are required to keep accurate payroll records showing the name, address, social security number and work classification of each employee and owner performing work; also, the straight time and overtime hours worked each day for each week, the fringe benefits, and, the actual per diem wage paid to each owner, journey person, apprentice worker or other employee hired in connection with the public works project.

The certified payroll records shall contain the same data fields listed on the Public Works Payroll Reporting Form (A-1-131) and contain or is accompanied by a declaration made under penalty of perjury. (California Code of Regulations, Section 16401).

Prime Contractors are responsible for submittal of their payrolls and those of their respective subcontractors as one package. Any payroll not submitted in the proper form will be rejected. In the event that there has been no work performed during a given week, the Certified Payroll Report shall be annotated: "No work" for that week or a Non-Performance Statement must be submitted.

Contractors are required to submit Certified Payroll Reports to the Department of Industrial Relations via its online eCPR system. Additionally, in accordance with California Labor Code Section 1776(b)(2), a copy of the contractor's CPRs shall be furnished upon request to a representative of the body awarding the contract and the DLSE, DIR. Under Labor Code Section 1776(g) there are penalties required for contractor's/subcontractor's failure to maintain and submit copies of certified payroll records on request.

Nondiscrimination in Employment:
There exist prohibitions against employment discrimination under Labor Code Sections 1735 and 1777.6, the Government Code, the Public Contracts Code, and Title VII of the Civil Rights Act of 1964.

Kickbacks Prohibited:
Contractors and subcontractors are prohibited from recapturing wages illegally by accepting or extracting "kickbacks" from employee wages under Labor Code Section 1778.

Acceptance of Fees Prohibited:
There exists a prohibition against contractor/subcontractor acceptance of fees for registering any person for public work under Labor Code Section 1779; or for filing work orders on public works contracts pursuant to Labor Code Section 1780.

Listing of Subcontractors:
All prime contractors are required to list properly all subcontractors, of all tiers, hired to perform work on the public works projects covering more than one-half of one percent, pursuant to Government Code Section 4104.

Proper Licensing:
Contractors are required to be licensed properly and to require that all its subcontractors be properly licensed. Penalties are required for employing workers while unlicensed under Labor Code Section 1021 and under the California Contractor License Law found at Business and Professions Code Section 7000 et seq.

Unfair Competition Prohibited:
Contractors and subcontractors are prohibited from engaging in unfair competition as specified under Business and Professions Code Sections 17200 to 17208.

Workers Compensation Insurance:
Labor Code Section 1861 requires that contractors and subcontractors be properly insured for Workers Compensation.

OSHA:
Contractors and subcontracts are required to abide by the Occupational, Safety and Health laws and regulations that apply to the particular construction project.

Proof of Eligibility/Citizenship:
The federal prohibition against hiring undocumented workers and the requirement to secure proof of eligibility/citizenship from all workers, is required.

Itemized Wage Statement:
Labor Code Section 226 requires that employees be provided with itemized wage statements

Contractor Registration:
As of April 1, 2015, Labor Code Section 1725.5 requires that all contractors and subcontractors performing work on a public works project must be registered with the State of California, Department of Industrial Relations. Registration occurs annually.

CERTIFICATION:

I acknowledge that I have been informed and am aware of the foregoing requirements and that I am authorized to make this certification.

Name: _____

Title: _____

Email: _____

Phone: _____

Company Name: _____

Signature: _____

Fringe Benefit Statement

Contract/Proposal No:	Project Name:	Date:
	INSTRUCTIONS: This form is to be submitted with the first certified payroll. In order that the proper Fringe Benefit rates can be used for checking payrolls or applied to Force Account work which may be done on the above contract the hourly rates for fringe benefits, subsistence and/or travel allowance payment (as required by collective bargaining agreements) made for employees on the various classes of work are tabulated below. THIS DOCUMENT CONTAINS PERSONAL INFORMATION AND, PURSUANT TO CIVIL CODE 1796.21, IT SHALL BE KEPT CONFIDENTIAL IN ORDER TO PROTECT AGAINST UNAUTHORIZED DISCLOSURE.	

Classification:	Effective Date:	Subsistence or Travel Pay:

	Health and Welfare $	Trust Fund Paid to:(Name)
		Address:
	Pension $	Trust Fund Paid To:(Name)
		Address:
	Vacation/Holiday $	Trust Fund Paid to:(Name)
		Address:
	Training and/or Other $	Trust Fund Paid To:(Name)
		Address:

Classification:	Effective Date:	Subsistence or Travel Pay:

	Health and Welfare $	Trust Fund Paid to:(Name)
		Address:
	Pension $	Trust Fund Paid To:(Name)
		Address:
	Vacation/Holiday $	Trust Fund Paid to:(Name)
		Address:
	Training and/or Other $	Trust Fund Paid To:(Name)
		Address:

Classification:	Effective Date:	Subsistence or Travel Pay:

	Health and Welfare $	Trust Fund Paid to:(Name)
		Address:
	Pension $	Trust Fund Paid To:(Name)
		Address:
	Vacation/Holiday $	Trust Fund Paid to:(Name)
		Address:
	Training and/or Other $	Trust Fund Paid To:(Name)
		Address:

Supplemental statement must be submitted during the progress of work should a change in rate of any of the classifications be made.

I CERTIFY THAT THE FRINGE BENEFIT PAYMENTS ARE MADE TO THE APPROVED PLANS, FUND OR PROGRAMS LISTED ABOVE.

Submitted (Contractor/Subcontractor)	By (Name and Title)	Signature

PUBLIC WORKS CONTRACT AWARD INFORMATION

Contract award information must be sent to your Apprenticeship Committee if you are approved to train. **If you are not approved to train, you must send the information (which may be this form) to ALL applicable Apprenticeship Committees in your craft or trade in the area of the site of the public work. Go to: http://www.dir.ca.gov/databases/das/pwaddrstart.asp for information about programs in your area and trade.** You may also consult your local Division of Apprenticeship Standards (DAS) office whose telephone number may be found in your local directory under California, State of, Industrial Relations, Division of Apprenticeship Standards.

Do not send this form to the Division of Apprenticeship Standards.

NAME OF YOUR COMPANY	CONTRACTOR'S STATE LICENSE NO
MAILING ADDRESS- NUMBER & STREET, CITY, ZIP CODE	AREA CODE & TELEPHONE NO.
NAME & ADDRESS OF PUBLIC WORKS PROJECT	DATE YOUR CONTRACT EXECUTED
	DATE OF EXPECTED OR ACTUAL START OF PROJECT
NAME & ADDRESS OF PUBLIC AGENCY AWARDING CONTRACT	ESTIMATED NUMBER OF JOURNEYMEN HOURS
	OCCUPATION OF APPRENTICE
THIS FORM IS BEING SENT TO: (NAME & ADDRESS OF APPRENTICESHIP PROGRAM(S))	ESTIMATED NUMBER OF APPRENTICE HOURS
	APPROXIMATE DATES TO BE EMPLOYED

This is not a request for dispatch of apprentices.

Contractors must make a separate request for actual dispatch, in accordance with Section 230.1(a) California Code of Regulations

Check One Of The Boxes Below

1. ☐ We are already approved to train apprentices by the _____ Apprenticeship Committee. We will employ and train under their Standards. Enter name of the Committee

2. ☐ We will comply with the standards of _____ Apprenticeship Committee for the duration of this job only. Enter name of the Committee

3. ☐ We will employ and train apprentices in accordance with the California Apprenticeship Council regulations, including § 230.1 (c) which requires that apprentices employed on public projects can only be assigned to perform work of the craft or trade to which the apprentice is registered and that the apprentices must at all times work with or under the direct supervision of journeyman/men.

Signature _____ *Date* _____

Typed Name _____

Title _____

State of California - Department of Industrial Relations DIVISION OF APPRENTICESHIP STANDARDS

DAS 140 (REV. 1/04)

Explanation to box 1 - 3 on form DAS 140

- Box 1 is for contractors who are already approved to train by an apprenticeship program (signatory/member).

- Box 2 indicates that a contractor is willing to comply with a program's Standards for the current project only. This generally means that the fringe benefits and the training funds will be paid to that Committee's Trust Fund. It also allows a contractor to take advantage of a more generous maximum ratio than the CAC Standards, but does not affect the minimum ratio of 1 apprentice hour for every 5 journeyman hours.

- Box 3 means that a contractor will be governed by the regulations of the California Apprenticeship Council. Generally this means that the minimum and maximum ratio for apprentices is the same – 1 apprentice hour for every 5 journeyman hours per each craft, totaled at the end of the project. It also means the Training Fund Contribution is usually paid to the California Apprenticeship Council.

ATTACHMENT F

PROJECT LABOR AGREEMENT

CITY OF SAN DIEGO

PROJECT LABOR AGREEMENT

FOR CONSTRUCTION OF PURE WATER PROGRAM PHASE I PROJECTS

Effective Date: June 16, 2020

ARTICLE 1 RECITALS ..... - 1 -

ARTICLE 2 DEFINITIONS ..... - 3 -

ARTICLE 3 SCOPE OF THE AGREEMENT ..... - 5 -

ARTICLE 4 UNION RECOGNITION AND EMPLOYMENT ..... - 9 -

ARTICLE 5 UNION ACCESS AND STEWARDS ..... - 15 -

ARTICLE 6 WAGES AND BENEFITS ..... - 16 -

ARTICLE 7 WORK STOPPAGES AND LOCKOUTS ..... - 19 -

ARTICLE 8 WORK ASSIGNMENTS AND JURISDICTIONAL DISPUTES ..... - 23 -

ARTICLE 9 MANAGEMENT RIGHTS ..... - 24 -

ARTICLE 10 SETTLEMENT OF GRIEVANCES AND DISPUTES ..... - 26 -

ARTICLE 11 COMPLIANCE ..... - 29 -

ARTICLE 12 SAFETY AND PROTECTION OF PERSON AND PROPERTY ..... - 30 -

ARTICLE 13 TRAVEL AND SUBSISTENCE ..... - 30 -

ARTICLE 14 APPRENTICES ..... - 31 -

ARTICLE 15 LEGAL ACTION ..... - 32 -

ARTICLE 16 PRE-JOB CONFERENCE ..... - 32 -

ARTICLE 17 LABOR/MANAGEMENT AND COOPERATION ..... - 33 -

ARTICLE 18 SAVINGS AND SEPARABILITY ..... - 34 -

ARTICLE 19 WAIVER ..... - 35 -

ARTICLE 20 AMENDMENTS ..... - 35 -

ARTICLE 21 DURATION OF THE PLA ..... - 35 -

ARTICLE 22 WORK AND ECONOMIC OPPORTUNITY ..... - 37 -

ARTICLE 23 HELMETS TO HARDHATS ..... - 39 -

ATTACHMENT A – LETTER OF ASSENT ..... - 42 -

ATTACHMENT B-1 – WORKFORCE DISPATCH REQUEST FORM ..... - 43 -

ATTACHMENT B-2 – CONTRACTOR CORE WORKFORCE FORM ..... - 44 -

ATTACHMENT C – DRUG AND ALCOHOL TESTING POLICY ..... - 45 -

APPENDIX A – SAN DIEGO PURE WATER PROGRAM PHASE I COVERED PROJECTS ..... - 51 -

APPENDIX B MEMORANDUM OF UNDERSTANDING #1 PROJECT LABOR AGREEMENT SECTION 3.1 ..... - 59 -

APPENDIX B MEMORANDUM OF UNDERSTANDING #2 NO DISCRIMINATION AND HARASSMENT ..... - 60 -

CITY OF SAN DIEGO

PROJECT LABOR AGREEMENT

FOR CONSTRUCTION OF PURE WATER PROGRAM

PHASE I COVERED PROJECTS

This Project Labor Agreement (hereinafter, "PLA" or "Agreement") is entered into this 16th day of June, 2020 by and between the San Diego Building and Construction Trades Council (hereinafter "Council"), and the signatory Craft Unions (hereinafter, together with the Council, collectively, the "Union" or "Unions"), and the Contractors performing work on Covered Projects that are subject to this Agreement. The City of San Diego is not a signatory Party to this Agreement, but shall be considered a "negotiating party" and will be responsible for implementing and administering the Agreement as described herein together with the Council, Unions and Contractors.

ARTICLE 1

RECITALS

WHEREAS, the City desires the completion of the Pure Water Program Phase I Projects in a professional, safe, efficient, and economical manner, without undue delay or work stoppage; and

WHEREAS, the successful completion of the City's Pure Water Program Phase I Projects are of the utmost importance to the rate payers and the City; and

WHEREAS, the Parties have pledged their full commitment to work towards a mutually satisfactory completion of the Pure Water Program Phase I Projects; and

WHEREAS, large numbers of workers of various skills will be required in the performance of the construction work on the Pure Water Program Phase I Projects, including workers affiliated with and/or represented by the Unions; and

WHEREAS, it is recognized that on construction projects with multiple contractors and bargaining units on the job site at the same time over an extended period of time, the potential for work disruption is substantial without an overriding commitment to maintain continuity of work; and

WHEREAS, the Parties agree that by establishing and stabilizing wages, hours, and working conditions for the workers employed on the Pure Water Program Phase I Projects, a

satisfactory, continuous, and harmonious relationship will exist among labor and management that will lead to the efficient and economical completion of Covered Projects; and

WHEREAS, in recognition of the special needs of the Project Work and to maintain a spirit of harmony, labor-management relations, peace, and stability during the term of this PLA, the Parties agree to establish effective and binding methods for the settlement of all misunderstandings, disputes and grievances without any strikes, slowdowns, work interruptions, or disruption of Project Work, and the Contractors agree not to engage in any lockout.

WHEREAS, the City places high priority upon the development of comprehensive programs for the recruitment, training, and employment of City Residents and Targeted Workers, and also recognizes the ability of local Apprenticeship Programs to provide meaningful and sustainable careers in the building and construction industry. The Parties will encourage City Residents and Targeted Workers to participate in Project Work through programs and procedures jointly developed to prepare and encourage such individuals for entrance into Apprenticeship Programs and formal employment on the Project Work through the referral programs sponsored and/or supported by the Parties to this PLA.; and

WHEREAS, the Project Work will provide opportunities for Disadvantaged Business Enterprises to participate as Contractors, subcontractors, or suppliers, and the Parties therefore agree that they will cooperate with all efforts of the City, the Project Labor Coordinator, and other organizations retained by the City for this purpose, to encourage and assist the participation of Disadvantaged Business Enterprises in the Project Work. Specifically, all Parties understand that the City has established and quantified goals which place a strong emphasis on the utilization of Disadvantaged Business Enterprises on the Project. Each Party agrees that it shall participate in outreach programs and provide education, and assistance to businesses not familiar with working on projects of this scope. Further, the Parties shall ensure that the provisions of this PLA do not inadvertently establish impediments to participation of such Disadvantaged Business Enterprises, City Residents and Targeted Workers.

WHEREAS, it is further understood that the City is a real party in interest to this Agreement and shall actively administer and enforce the obligations of this PLA to ensure that the benefits of this Agreement flow to all signatory Parties, craft persons working under it, and the rate payers and residents of the City. The City will send a letter to the Council to signify that the City will be performing its obligation under this Agreement and will designate a “Project Labor Coordinator,” either from its own staff and/or an independent contractor acting on behalf of the City, to monitor and enforce compliance with this PLA. In addition, this letter will state that the City will include and incorporate this Agreement into each Covered Project's construction documents. The Project Labor Coordinator, as the authorized representative of the City, will assist with the development and implementation of the programs referenced in this PLA, all of which are critical to fulfilling the intent and purposes of the Parties and this PLA.

NOW, THEREFORE, IT IS AGREED BETWEEN AND AMONG THE PARTIES AS FOLLOWS:

ARTICLE 2

DEFINITIONS

Capitalized terms utilized in this PLA which are not otherwise defined herein shall have the meanings ascribed to said terms below.

"Agreement" means this Project Labor Agreement (PLA).

"Applicable Prevailing Determination" means the prevailing wage determinations applicable to Project Work pursuant to the State of California Labor Code.

"Apprentice" means an apprentice properly registered in an Apprenticeship Program for the entire time they are employed on a Covered Project.

"Apprenticeship Program" as used in this PLA shall be defined as an apprenticeship program certified by the State of California.

"City" means the City of San Diego and its departments delivering the Covered Projects.

"City Resident" means a City of San Diego permanent resident at the time of initial employment on a Covered Project or a Veteran residing anywhere.

"Contractor" means any contractor to whom the City awards a Construction Contract for Project Work and all subcontractors utilized by such Contractors for Project Work. The term "Contractor" includes any individual, firm, partnership, corporation, owner operator, or combination thereof, including joint ventures, that has entered into a contract with the City for Project Work, or any subcontractor who has signed a contract with a Contractor or another subcontractor for Project Work.

"Core Employees" are defined in Article 4, Section 4.6 (e).

"Council" means the San Diego County Building & Construction Trades Council.

"Covered Contract" means a contract awarded to a Contractor by the City for a Pure Water Program Phase I Project identified in Appendix A.

"Covered Project" or "Project Work" means a Pure Water Program Phase I Project that is identified in Appendix A and is limited to the construction site of work.

"Disadvantaged Business Enterprise" means a firm that has been certified via the Department of Transportation, but also includes: Minority Business Enterprises or Woman Business Enterprises certified by the Department of Transportation or the California Public Utilities Commission; and Small Local Business Enterprises or Emerging Local Business Enterprises certified by the City.

"Prime Contractor" means the prime Contractor awarded a Covered Contract in privity directly with the City.

"Project Labor Coordinator" means the designee of the City, either from its own staff and/or an independent entity acting on behalf of the City, to monitor compliance with this Agreement and assist with developing, implementing and administering the requirements, policies and programs referenced herein.

"Schedule A's" means the local master labor agreements of the Unions.

"Targeted Worker" means any individual qualifying for one (1) or more of the following Targeted Worker categories:

(a) Is a Veteran, or is the eligible spouse of a "Veteran of the United States armed forces, under Section 2(a) of the Jobs for Veterans Act (38 United States Code [U.S.C.] 4215[a]);

(b) At initial time of employment on a Covered Project, is an Apprentice with less than ten (10) percent of the work hours required for graduation to become a Journeyperson;

(c) Has no high school diploma or general education diploma (GED);

(d) Is homeless or has been homeless within the last year;

(e) Is a former foster youth;

(f) Is a custodial single parent;

(g) Is experiencing protracted unemployment (receiving unemployment benefits for at least three [3] months);

(h) Is a current recipient of government cash or food assistance benefits;

(i) Has a documented income at or below 100 percent of the Federal Poverty Level;

(j) Is formerly incarcerated with a history of involvement with the criminal justice system.

"Union" or "Unions" means any labor organization signatory to this Agreement acting in their own behalf and on behalf of their respective affiliates and member organizations whose names are subscribed hereto and who have, through their officers, executed this Agreement.

"Veteran" means a veteran or the eligible spouse of a veteran of the United States armed forces, under Section 2(a) of the Jobs for Veterans Act (38 U.S.C. 4215[a]);

ARTICLE 3

SCOPE OF THE AGREEMENT

Section 3.1 This PLA is limited to covering all onsite construction work within the scope of each Covered Contract.

Section 3.2 Exclusions. Items specifically excluded from the scope of this PLA include the following:

(a) Work of non-manual employees including but not limited to, superintendents, supervisors, staff engineers, quality control and quality assurance personnel, timekeepers, mail carriers, clerks, office workers, messengers, guards, safety personnel, emergency medical and first aid technicians, and other professional, engineering, administrative, supervisory, and management employees; and

(b) All offsite manufacturing, fabrication, deliveries, maintenance, and handling of materials, equipment, or machinery, and the offsite hauling of materials of any kind to or from the Covered Project site. However, any lay down or storage areas for equipment or material and manufacturing (i.e. prefabrication) sites dedicated solely for the project, and the movement of materials or goods between locations on a Covered Project site are within the scope of the PLA. On-site fabrication work includes work done for the Project in temporary yards or areas near the Project. On-site construction shall also include the site of any batch plant constructed solely to supply materials to the Project; and

(c) All employees of the City, Project Labor Coordinator, design teams (including, but not limited to, architects, engineers, and master planners), or any other consultants for the City (including, but not limited to, project managers and

construction managers and their employees where not engaged in Project Work) and their subconsultants, and other employees of professional service organizations, not performing manual labor within the scope of this PLA. Notwithstanding the foregoing, however, this exclusion shall not apply to the classifications for Surveyors and/or Building/Construction Inspectors and/or Field Soils and Material Testers (Inspectors) unless they are City employees. This inclusion applies to the scope of work defined in the State of California Wage Determination for Surveyors and/or Building/Construction Inspectors and/or Field Soils and Material Testers (Inspectors). This shall also specifically include such work where it is referred to by utilization of such terms as "quality control" or "quality assurance." Every Inspector performing under these classifications on Covered Projects pursuant to a professional services agreement, a contract entered into directly with the City, or a contract with a Contractor shall be bound to all applicable requirements of this Agreement; and

(d) Any work performed on or near or leading to or into a site of work covered by this PLA and undertaken by state, county, city, or other governmental bodies, or their contractors (other than work within the scope of this PLA undertaken by contractors to the City); or by private utilities, or their contractors; and

(e) Work performed by employees of a manufacturer or vendor on the manufacturer's or vendor's equipment, if required by the warranty agreement in order to maintain the warranty or guarantee, and provided that the warranty agreement is the manufacturer's or vendor's usual and customary warranty agreement for such equipment and is consistent with industry practice; and

(f) Specialized or technical work requiring specialized training, unique skills, or a level of specific technical experience which employees represented by the Union do not possess. At least ten (10) working days notice shall be given to the Council before any work is performed pursuant to this exemption.; and

(g) Laboratory work for testing; and

(h) Non-construction support services contracted by the City, Project Labor Coordinator, or Contractor in connection with this Project.

Section 3.3 Awarding of Contracts.

(a) The City has the absolute right to bid or award Covered Contracts regardless of delivery method to any Contractor notwithstanding the existence or non-existence of any agreements between such Contractor and any Union Parties,

provided only that such Contractor is willing, ready, and able to execute and comply with this PLA should such Contractor be awarded work covered by this PLA.

(b) It is agreed that all Contractors who have been awarded a contract for Project Work shall be required to accept and be bound by the terms and conditions of this PLA. Contractors shall evidence their acceptance of this Agreement by executing a Letter of Assent as set forth in Attachment A hereto. The Prime Contractor must sign and submit the Letter of Assent as a condition of award prior to the execution of a Covered Contract. No Contractor shall commence Project Work without first providing a copy of the signed Letter of Assent to the Project Labor Coordinator.

(c) The City and Prime Contractors agree that to the extent permitted by law and consistent with the economy and efficiency of construction and operation, it will use its best efforts to purchase materials, equipment, and supplies that will not create labor strife. Under all circumstances, however, the City and Prime Contractors shall retain the absolute right to select the lowest responsive and responsible bidder for the award of contracts on all Covered Projects.

Section 3.4 Coverage Exception. The Parties agree and understand that this PLA shall not apply to any work that would otherwise be covered Project Work if a governmental agency or granting authority partially or fully funding such work determines that it will not fund the Project Work if it is covered by this PLA. The City agrees that it will make every effort to establish the inclusion of this PLA with any governmental agency or granting authority funding a Covered Project.

Section 3.5 Schedule A's.

(a) The provisions of this PLA, including the Schedule A's (which are the local Master Labor Agreements of the signatory Unions having jurisdiction over the work on the Project, as such may be changed from time to time consistent with Section 21.3, and which are incorporated herein by reference), shall apply to the work covered by this PLA, notwithstanding the provisions of any other local, area and/or national agreement that may conflict with or differ from the terms of this PLA. Where a subject covered by the provisions of this PLA is also covered by a Schedule A, the provisions of this PLA shall prevail. Where a subject is covered by a provision of a Schedule A and not covered by this PLA, the provisions of the Schedule A shall prevail. Any dispute as to the applicable source between this PLA and any Schedule A shall be resolved under the procedures established in Article 10.

(b) It is understood that this PLA, together with the referenced Schedule A's, constitutes a self-contained, stand-alone agreement and, by virtue of having become bound to this PLA, the Contractor will not be obligated to sign any other local, area, or national collective bargaining agreement as a condition of performing work within the scope of this PLA (provided, however, that the Contractor may be required to sign a uniformly applied non-discriminatory Participation or Subscription Agreement at the request of the trustees or administrator of a trust fund established pursuant to Section 302 of the Labor Management Relations Act, and to which such Contractor may be bound to make contributions under this PLA, provided that such Participation or Subscription Agreement does not purport to bind the Contractor beyond the terms and conditions of this PLA and/or expand its obligation to make contributions pursuant thereto). It shall be the responsibility of the Prime Contractor to have each of its Contractors of any tier sign the documents with the appropriate Union prior to the Contractor beginning Project Work.

Section 3.6 The Parties agree that this PLA will be made available to, and will fully apply to, any successful bidder for Project Work, without regard to whether that successful bidder performs work at other sites on either a Union or non-Union basis. This PLA shall not apply to any work of any Contractor other than that on Project Work specifically covered by this PLA.

Section 3.7 Binding Signatories Only. This PLA and Letter of Assent shall only be binding on the signatory Parties hereto, and shall not apply to the parents, affiliates, subsidiaries, or other ventures of any such Party.

Section 3.8 Other City Work. Nothing contained herein shall be interpreted to prohibit, restrict, or interfere with the performance of any other operation, work, or function not covered by this PLA, which may be performed by City employees or contracted for by the City for its own account, on its property, or in and around a project site.

Section 3.9 Separate Liability. It is understood that the liability of the Contractor(s) and the liability of the separate Unions under this PLA shall be several and not joint. The Unions agree that this PLA does not have the effect of creating any joint employment status between or among the City or Project Labor Coordinator and/or any Contractor.

Section 3.10 Completed Project Work. As areas of Project Work are accepted by the City, this PLA shall have no further force or effect on such items or areas except where the Contractor is directed by the City or its representatives to engage in repairs, modification and/or check-out functions required by its contract(s) with the City.

Section 3.11 Except for all work performed under the NTL Articles of Agreement, the National Stack/Chimney Agreement, and the National Cooling Tower Agreement, all instrument calibrations work and loop checking shall be performed under the terms of the UA/IBEW Joint National Agreement for Instrument and Control Systems Technicians, and the National Agreement of the International Union of Elevator Constructors, with the exception of Article 7 (Work Stoppages and Lockouts), Article 8 (Work Assignments and Jurisdictional Disputes) and Article 10 (Settlement of Grievances and Disputes) of this PLA, which shall apply to such work.

ARTICLE 4

UNION RECOGNITION AND EMPLOYMENT

Section 4.1 Recognition. The Contractor recognizes the Unions as the exclusive bargaining representative for the employees engaged in Project Work. Such recognition does not extend beyond the period when the employee is engaged in Project Work.

Section 4.2 Contractor Selection of Employees. The Contractor shall have the right to determine the competency of all employees, the number of employees required, the duties of such employees within their craft jurisdiction, and shall have the sole responsibility for selecting employees to be laid off, consistent with this Article. The Contractor shall also have the right to reject any applicant referred by a Union for any reason, subject to any reporting time requirements of the applicable Schedule A; provided, however, that such right is exercised in good faith and not for the purpose of avoiding the Contractor's commitment to employ qualified workers through the procedures endorsed in this PLA.

Section 4.3 Referral Procedures.

(a) For signatory Unions to this Agreement having a job referral system contained in a Schedule A, the Contractor agrees to comply with such system and it shall be used exclusively by such Contractor, except as modified by this PLA. Such job referral system will be operated in a nondiscriminatory manner and in full compliance with federal, state, and local laws and regulations that require equal employment opportunities and non-discrimination. All of the foregoing hiring procedures, including related practices affecting apprenticeship, shall be operated so as to consider the goals of the City to encourage employment of City Residents, Targeted Workers, and utilization of Disadvantaged Business Enterprises on the Project Work, and to facilitate the ability of all Contractors to meet their employment needs.

(b) The local Unions will exert their best efforts to recruit and refer sufficient numbers of skilled craft workers to fulfill the labor requirements of the Contractor, including specific employment obligations to which the Contractor may be legally and/or contractually obligated; and to refer Apprentices as requested to develop a larger, skilled workforce. The Unions will work with the Project Labor Coordinator and others designated by the City, to identify and refer competent craft persons as needed for Project Work, and to identify individuals, particularly City Residents and Targeted Workers, for entrance into Apprenticeship Programs, or participation in other identified programs and procedures to assist individuals in qualifying and becoming eligible for such Apprenticeship Programs, all maintained to increase the available supply of skilled craft personnel for Project Work and future construction work to be undertaken by the City.

(c) The Union shall not knowingly refer an employee currently employed by a Contractor on Project Work to any other Contractor.

Section 4.4 Non-Discrimination in Referral, Employment, and Contracting. The Unions and Contractors agree that they will not discriminate against any employee or applicant for employment on the basis of race, color, religion, gender, national origin, age, Union status, sex, sexual orientation, marital status, political affiliation, or disability. Further, it is recognized that the City has certain policies, programs, and goals for the utilization of Disadvantaged Business Enterprises. The Parties shall jointly endeavor to assure that these commitments are fully met, and that any provisions of this PLA that may appear to interfere with Disadvantaged Business Enterprises successfully bidding for work on Covered Projects shall be carefully reviewed, and adjustments made as may be appropriate and agreed upon among the Parties, to ensure full compliance with the spirit and letter of the City's policies and commitment to its goals for the significant utilization of Disadvantaged Business Enterprises as Contractors, vendors or suppliers on Project Work.

Section 4.5 Employment of City Residents and Targeted Workers.

(a) In recognition of the City's mission to serve the City and its residents, the Unions and Contractors agree that, to the extent allowed by law, and as long as they possess the requisite skills and qualifications, residents of the City of San Diego, hereafter “City Residents”, shall be first referred for Project Work. A “City Resident” is defined as a City of San Diego permanent resident at the time of initial employment on a Covered Project or a Veteran residing anywhere. The

list of qualifying zip codes for City Residents is included within Attachment B-1, Workforce Dispatch Request Form.

(b) The Contractors and Unions agree to work together to achieve a goal of at least thirty-five (35) percent of the total construction craft hours worked on each Covered Project be performed by City Residents.

(c) The Contractors and Unions agree to work together to achieve a goal of at least ten (10) percent of the total construction craft hours worked on each Covered Project be performed by Targeted Workers. Hours worked by Targeted Workers who are also City Residents may be applied to the City Resident participation goal.

(d) Professional services agreements entered into by the City for covered surveying or inspection services, which are separate and apart from the Construction Contract for a Covered Project, are exempt from the foregoing City Resident and Targeted Worker hiring goals.

(e) To facilitate the dispatch of City Residents, as well as all Contractor requests for referral and dispatch of workers from the applicable Union referral system, all Contractors are required to utilize the Workforce Dispatch Request Form for Covered Projects, a sample of which is attached as Attachment B-1.

(f) The Project Labor Coordinator shall work with the Unions and Contractors in the administration, monitoring, and the reporting of the foregoing City Resident and Targeted Worker hiring goals.

(g) The Parties recognize that the Pure Water Program Phase I Projects have multiple funding sources. If a particular funding source applied by the City to a Covered Project does not allow geographic preference for hiring local craft workers, the foregoing City Resident participation requirement will not be applicable to that Covered Project. The City reserves the right to apply Pure Water Program Phase I funding as it chooses and will make every effort to fund the Covered Projects to encourage inclusivity of City Residents.

Section 4.6 Core Employees. This Section only applies to Contractors who are not directly signatory to an applicable Schedule A.

(a) Disadvantaged Business Enterprise. The Parties recognize the City's interest in promoting competition and inclusion of Disadvantaged Business Enterprises, which may not be signatory to a current Schedule A. In order to promote participation and attract Disadvantaged Business Enterprises to work

under this Agreement, and subject to the limitations set forth below, each Contractor that is a Disadvantaged Business Enterprise may first employ three (3) of its core employees per craft on each Covered Project prior to employing an employee through the appropriate Union hiring hall. The next (fourth) employee shall be hired from the appropriate Union hiring hall and thereafter, such Contractor may employ, as needed, two (2) additional Core Employees in an alternating manner with Union referrals, up to a total of five (5) Core Employees. Thereafter, all additional employees in the affected trade or craft shall be requested and referred from the appropriate Union hiring hall.

The foregoing Core Employee hiring procedure for Disadvantaged Business Enterprises is subject to the following limitations:

(1) Disadvantaged Business Enterprises with an individual subcontract value of $500,000 or less and;

(2) Disadvantaged Business Enterprises are limited to utilizing the foregoing Core Employee hiring procedure to one (1) subcontract per Covered Project and;

(3) The total value of all subcontracts utilizing the foregoing Core Employee hiring procedure shall not exceed ten (10) percent of the total value of each Covered Project; and

(4) In order to assist the Project Labor Coordinator monitor compliance with this Section, each Prime Contractor will be responsible for tracking, reporting and providing notice to the Project Labor Coordinator describing each Disadvantaged Business Enterprise subcontract that qualifies for the foregoing hiring procedure prior to work commencing.

(b) Employers who do not qualify for the hiring procedure set forth in Section 4.6(a), and who are not otherwise signatory to a current Schedule A, may employ, as needed, first, a Core Employee, then an employee through a referral from the appropriate Union hiring hall, then a second Core Employee, then a second employee through the referral system, and so on until a maximum of three (3) Core Employees are employed per craft on each Covered Project. Thereafter, all additional employees in the affected trade or craft shall be requested and referred from the appropriate Union hiring hall in accordance with this Article. Contractors employing more than fifty (50) craft workers at the same time in a specific trade on a Covered Project may hire an additional two (2) Core Employees.

(c) Section 4.6 only applies to Contractors who are not directly signatory to a current Schedule A for the craft worker in its employ and is not intended to limit the transfer provisions of the Schedule A of any trade. As part of this process, and in order to facilitate the contract administration procedures, as well as appropriate fringe benefit fund coverage, all Contractors shall require their Core Employees and any other persons employed other than through the referral process, to register with the appropriate Union hiring hall, if any, prior to their first day of employment working under the Construction Contract at the project site.

(d) Prior to each Contractor performing any work on a Covered Project, each Contractor shall provide a list of Core Employees to the Project Labor Coordinator and the Council. After submitting the Core Employee list prior to commencing work, Contractors shall not make any changes or substitutions to the Core Employee list for the duration of the Covered Project. Failure to submit the Core Employee list prior to work commencing will prohibit the Contractor from using any Core Employees for 30 calendar days after the list is provided to the Project Labor Coordinator and Council.

(e) Upon request by any Party to this Agreement, the Contractor hiring any Core Employee shall provide satisfactory proof (i.e., payroll records, quarterly tax records, and such other documentation) evidencing the Core Employee's qualification as a Core Employee to the Project Labor Coordinator and the Council.

(f) Core Employees must meet the following eligibility requirements to qualify for employment on Covered Projects:

(1) A Core Employee must be either a journeyperson or Apprentice and appear on the Contractor's active payroll for at least ninety (90) of the last one-hundred-eighty (180) working days prior to being designated as a Core Employee. The date a Core Employee is designated is the date the Core Employee list is submitted to the Project Labor Coordinator and Council prior to the Contractor commencing work; and

(2) A Core Employee must possess any license required by state or federal law for the Project Work to be performed; and

(3) A Core Employee must have the ability to safely perform the basic functions of the applicable trade.

(g) In addition to the core employee provisions set forth herein, all Contractors may avail themselves of any opportunity provided for in the applicable Schedule A's to call for specific employees by name.

(h) During any layoffs or reductions in workforce, Contractors shall layoff employees in an order and manner consistent with the Core Employee hiring procedures and maintain the required Core Employee-to-Union referral ratios required by this Section for the duration of each Covered Project.

Section 4.7 Time for Referral. If any Union's registration and referral system does not fulfill the requirements for specific classifications of covered employees (including City Residents) requested by any Contractor within forty-eight (48) hours (excluding Saturdays, Sundays, and holidays), that Contractor may employ Core Employees without reference to the ratio requirements in Section 4.6 or use employment sources other than the Union registration and referral services, and may employ applicants from any other available source. The Contractor should promptly inform the Union of any applicants hired from other sources, and such applicants shall register with the appropriate hiring hall, if any.

Section 4.8 Lack of Referral Procedure. If a signatory local Union does not have a job referral system as set forth in Section 4.3 above, the Contractors shall give the Union equal opportunity to refer applicants. The Contractors shall notify the Union of employees so hired, as set forth in Section 4.7.

Section 4.9 Union Membership. Employees are not required to become or remain union members as a condition of performing Covered Work under this Agreement. Employers shall make and transmit all deductions for union dues, fees, and assessments that have been authorized by employees in writing in accordance with the applicable Schedule A. Nothing in this Section 4.9 is intended to supersede the requirements of the applicable Schedule A's as to those Employers otherwise signatory to such Schedule A and as to the employees of those Employers who are performing Covered Work.

Section 4.10 Foremen. The selection and number of craft foremen and/or general foremen shall be the responsibility of the Contractor, consistent with the Schedule A's. All foremen shall take orders exclusively from the designated Contractor representatives. Craft foremen shall be designated as working foreman at the request of the Contractors.

Section 4.11 Skilled and Trained Workforce. All Contractors performing Project Work are required to provide the City with an enforceable commitment that a skilled and

trained workforce will be used to complete the construction contract or project, in accordance with City Council Resolution Number R-312062.

ARTICLE 5

UNION ACCESS AND STEWARDS

Section 5.1 Access to Project Sites. Authorized representatives of the Union shall have access to Project Work, provided that they do not interfere with the work of employees and further provided that such representatives fully comply with posted visitor, security, and safety rules.

Section 5.2 Stewards.

(a) Each signatory local Union shall have the right to dispatch a working journeyperson as a steward for each shift, and shall notify the Contractor in writing of the identity of the designated steward or stewards prior to the assumption of such person's duties as steward. Such designated steward or stewards shall not exercise any supervisory functions. There will be no non-working stewards. Stewards will receive the regular rate of pay for their respective crafts.

(b) In addition to his/her work as an employee, the steward should have the right to receive, but not to solicit, complaints or grievances and to discuss and assist in the adjustment of the same with the employee's appropriate supervisor. Each steward should be concerned only with the employees of the steward's Contractor and not with the employees of any other Contractor. The Contractor will not discriminate against the steward in the proper performance of his/her Union duties.

(c) When a Contractor has multiple, non-contiguous work locations at one site, the Contractor may request and the Union shall appoint such additional working stewards as the Contractor requests to provide independent coverage of one or more such locations. In such cases, a steward may not service more than one work location without the approval of the Contractor.

(d) The stewards shall not have the right to determine when overtime shall be worked or who shall work overtime.

Section 5.3 Steward Layoff/Discharge. The Contractor agrees to notify the appropriate Union twenty-four (24) hours before the layoff of a steward, except in the case of

disciplinary discharge for just cause. If the steward is protected against such layoff by the provisions of the applicable Schedule A, such provisions shall be recognized when the steward possesses the necessary qualifications to perform the remaining work. In any case in which the steward is discharged or disciplined for just cause, the appropriate Union will be notified immediately by the Contractor, and such discharge or discipline shall not become final (subject to any later filed grievance) until twenty-four (24) hours after such notice has been given.

Section 5.4 Employees on Non-Project Work. On work where the personnel of the City may be working in close proximity to the construction activities covered by this PLA, the Union agrees that the Union representatives, stewards, and individual workers will not interfere with the City personnel, or with personnel employed by any other employer not a Party to this PLA.

ARTICLE 6

WAGES AND BENEFITS

Section 6.1 Wages. At a minimum, all employees covered by this PLA shall be classified in accordance with work performed and paid the hourly wage rates for those classifications in compliance with the Applicable Prevailing Wage Determination established pursuant to the California Labor Code by the California Department of Industrial Relations.

Section 6.2 Benefits.

(a) Subject to the exception set forth below for Disadvantaged Business Enterprises, otherwise, for all employees performing Project Work, Contractors shall pay all fringe benefits and other required employer contributions to the established Union employee benefit funds in the amounts required by the applicable Schedule A. In addition, the Contractors and Unions agree that only such bona fide employee benefits that accrue to the direct benefit of the employees (such as pension and annuity, health and welfare, vacation, apprenticeship, and training funds) shall be included in this requirement and required to be paid by the Contractor on Covered Projects. These Contractor contributions shall not exceed the contribution amounts set forth in the Applicable Prevailing Wage Determination.

Union Benefit Fund Contributions for Disadvantaged Business Enterprises. Disadvantaged Business Enterprises are exempt from paying fringe benefits and

other required employer contributions on behalf of their Core Employees to the Union employee benefit funds, subject to the following exemption limitations:

(1) The exemption is only applicable to Disadvantaged Business Enterprises with an individual subcontract value of $500,000 or less and;

(2) Disadvantaged Business Enterprises are limited to utilizing this exemption for one subcontract per Covered Project and;

(3) The total value of all subcontracts utilizing this exemption shall not exceed ten (10) percent of the total value of each Covered Project; and

(4) Disadvantaged Business Enterprises utilizing this exemption are still required to pay all fringe benefits and other required employer contributions to the established Union employee benefit funds for all employees other than their Core Employees, and must comply with the applicable prevailing wage requirements, including the payment of fringe benefits, for all employees performing Project Work; and

(5) In order to assist the Project Labor Coordinator monitor utilization of this exemption, each Prime Contractor will be responsible for tracking, reporting and providing notice to the Project Labor Coordinator about each Disadvantaged Business Enterprise subcontract that qualifies and intends to utilize this exemption prior to work commencing.

(b) Where applicable, the Contractor adopts and agrees to be bound by the written terms of the applicable, legally established, Union trust agreement(s) specifying the detailed basis how payments will be made into, and benefits paid out of, such trust funds for its employees. The Contractor authorizes the Parties to such trust funds to appoint trustees and successors' trustees to administer the trust funds and hereby ratifies and accepts the trustees so appointed as if made by the Contractor. The Contractor obligations to the applicable Union benefit fund(s) and trust agreement(s) are limited to work performed on a Covered Project. The applicable Union benefit funds and trust agreement(s) to each Contractor are determined by the pre-job conference and Union work assignment process described in Articles 8 and 16.

(c) Each Contractor is required to certify to the Project Labor Coordinator that it has paid all benefit contributions due and owing to the appropriate Union trust(s) and benefit funds prior to the receipt of its final payment and/or retention. Further, upon timely notification by a Union to the Project Labor Coordinator, the Project Labor Coordinator shall work with any Contractor who is delinquent in

payments to assure that proper benefit contributions are made, to the extent of requesting the City or the prime Contractor to withhold payments otherwise due such Contractor, until such contributions have been made or otherwise guaranteed.

(d) Notwithstanding any other provisions, this Agreement is an agreement under Section 8(f) of the National Labor Relations Act (NLRA), which covers work performed in the building and construction industry. In addition, the work performed under this Agreement qualifies for the Construction Industry Exemption under the Employee Retirement and Income Security Act of 1974 ("ERISA"), as amended as well. If any Union Pension Trust Fund ("Fund") covered by the terms and conditions of this Agreement does not qualify for the Construction Industry Exemption authorized by Section 4203 (B)(1)(i), of the Employee Retirement Income Security Act of 1974 ("ERISA") as amended, 29 U.S.C. 1383(b)(1)(i), or has not taken the necessary steps to amend the Fund documents to qualify for the Construction Industry Exemption as authorized by Section 4203(B)(1)(ii) of ERISA, as amended, 29 U.S.C. 1383(b)(1)(B)(ii); and to recognize the work performed under this Agreement to qualify for the Construction Industry Exemption, the Contractors signatory to this Agreement will not be obligated to make pension fund contributions to that Fund. In such an event, the Contractor shall pay all required amounts otherwise allocated for payment toward the non-exempt Fund to the employees' wages or other bona fide retirement plan program pursuant to applicable prevailing wage requirements.

Section 6.3 Wage Premiums. Wage premiums, including, but not limited to, pay based on height of work, shift premiums, hazard pay, scaffold pay, and special skills shall not be applicable to work under this PLA, except to the extent provided for in any applicable prevailing wage determination.

Section 6.4 Compliance with Prevailing Wage Laws. All complaints regarding possible prevailing wage violations may be referred to the Project Labor Coordinator or Labor Compliance Program, if any, for processing, investigation and resolution, and if not resolved within thirty (30) calendar days, may be referred by any Party to the State Labor Commissioner. To facilitate compliance with applicable prevailing wage laws, the City and each Contractor agree to provide copies of certified payroll reports, redacted only to the extent required by law, to the Unions (or to any Labor Management Cooperation Committee in which a Union or its affiliate participates) within ten (10) days of their request.

ARTICLE 7

WORK STOPPAGES AND LOCKOUTS

Section 7.1 No Work Stoppages or Disruptive Activity. The Council and the Unions signatory hereto agree that they, nor their respective officers, or agents or representatives, shall incite or encourage, condone or participate in any strike, walk-out, slowdown, picketing, observation of picket lines, or other activity of any nature or kind whatsoever, for any cause or dispute whatsoever with respect to or any way related to Project Work, or which interferes with or otherwise disrupts Project Work, or with respect to or related to the City or Contractors or subcontractors, including, but not limited to, economic strikes, unfair labor practice strikes, safety strikes, sympathy strikes, and jurisdictional strikes whether or not the underlying dispute is arbitrable. Any such actions by the Council, or Unions, or their members, agents, representatives, or the employees they represent shall constitute a material violation of this PLA. The Council and the Union shall take all steps necessary to obtain compliance with this Article.

Section 7.2 Employee Violations. The Contractor may discharge any employee violating Section 7.1 above, and any such employee will not be eligible for rehire under this PLA.

Section 7.3 Standing to Enforce. The City, the Project Labor Coordinator, or any Contractor affected by an alleged violation of Section 7.1 shall have standing and the right to enforce the obligations established therein.

Section 7.4 Expiration of Schedule A's. If a collective bargaining agreement between a signatory Contractor and one or more of the Union(s) expires before the Contractor completes the performance of a Covered Contract for a Covered Project, and the Union or the Contractor gives notice of demand for a new or modified collective bargaining agreement, the Unions agree that they will not strike the Contractor on any Covered Project, and the Union and the Contractor agree that the expired collective bargaining agreement will continue in full force and effect for the Project Work until a new or modified collective bargaining agreement is reached between the Union and the Contractor. If the new or modified collective bargaining agreement reached between the Union and the Contractor provides that any terms of the collective bargaining agreement shall be retroactive, the Contractor agrees to comply, consistent with the terms of this PLA and the Prevailing Wage Statute, with any retroactive terms of the new or modified collective bargaining agreement which are applicable to employees of said Contractor that are employed on a Covered Project within seven (7) days at

no cost to the City. All employees shall continue to work and to perform all their obligations with respect to Project Work despite the expiration of a Schedule A agreement. Should a Contractor engaged in Project Work enter into an interim agreement with the Unions for work being performed elsewhere after the expiration, and before the renewal of a local collective bargaining agreement forming the basis for Schedule A, such interim agreement shall be utilized by that Contractor for Project Work, subject to the provisions of Section 21.3.

Section 7.5 No Lock Outs. Contractors shall not cause, incite, encourage, condone or participate in any lock-out of employees with respect to Project Work during the term of this PLA. The term "lock-out" refers only to a Contractor's exclusion of employees in order to secure collective bargaining advantage, and does not refer to the discharge, termination, or layoff of employees by the Contractor for any reason in the exercise of rights pursuant to any provision of this PLA, or any other agreement, nor does "lock-out" include the City's decision to stop, suspend, or discontinue any Project Work or any portion thereof for any reason.

Section 7.6 Best Efforts to End Violations.

(a) If a Contractor contends that there is any violation of this Article, it shall, at least twenty-four (24) hours prior to invoking the procedures of Section 7.7, provide written notification to the Council of the involved Union(s) and to the Project Labor Coordinator, setting forth the facts which the Contractor contends violates this Article. The Council and the leadership of the involved Union(s) will immediately instruct, order, and use their best efforts to cause the cessation of any violation of the Article.

(b) If the Union contends that any Contractor has violated this Article, it will notify the Contractor and the Project Labor Coordinator, setting forth the facts which the Union contends violate this Article, at least twenty-four (24) hours prior to invoking the procedures of Section 7.7. The Project Labor Coordinator shall promptly order the involved Contractor(s) to cease any violation of the Article.

Section 7.7 Expedited Enforcement Procedure. Any Party, including the City, which is an intended beneficiary of this Article, or the Project Labor Coordinator, may institute the following procedures, in lieu of or in addition to any other action at law or equity, when a breach of this Article is alleged.

(a) The Party invoking this procedure shall notify Thomas Pagan, who has been selected by the negotiating Parties, and whom the Parties agree shall be the permanent arbitrator under this procedure, or Barry Winograd, as the alternate

arbitrator under this procedure. If the permanent arbitrator is unavailable at any time, the alternate will be contacted. If neither is available, then a selection shall be made from the list of arbitrators as set forth in Article 10. Notice to the arbitrator shall be by the most expeditious means available, with notices to the Parties alleged to be in violation, and to the Project Labor Coordinator and Council. For purposes of this Article, written notice may be given by email, facsimile, hand delivery, or overnight mail and will be deemed effective upon receipt.

(b) Upon receipt of said notice, the arbitrator named above or his/her alternate shall sit and hold a hearing within twenty-four (24) hours if it is contended that the violation still exists, but not sooner than twenty-four (24) hours after notice has been dispatched to the Council of the involved Union(s) and/or Contractor as required by Section 7.6, above.

(c) The arbitrator shall notify the Parties of the place and time chosen for this hearing. Said hearing shall be completed in one session, which, with appropriate recesses at the arbitrator's discretion, shall not exceed twenty-four (24) hours unless otherwise agreed upon by all Parties. A failure of any Party or Parties to attend said hearings shall not delay the hearing of evidence or the issuance of any award by the arbitrator.

(d) The sole issue at the hearing shall be whether or not a violation of this Article has in fact occurred. The arbitrator shall have no authority to consider any matter in justification, explanation, or mitigation of such violation or to award damages, (except for damages as set forth in Section 7.8 below) which issue is reserved for court proceedings, if any. The award shall be issued in writing within three (3) hours after the close of the hearing and may be issued without an opinion. If any Party desires a written opinion, one shall be issued within fifteen (15) days, but its issuance shall not delay compliance with, or enforcement of, the award. The arbitrator may order cessation of the violation of the Article and other appropriate relief, and such award shall be served on all Parties by hand or registered mail upon issuance.

(e) Such award shall be final and binding on all Parties and may be enforced by any court of competent jurisdiction upon the filing of this PLA and all other relevant documents referred to herein above in the following manner. Written notice of the filing of such enforcement proceedings shall be given to the other Party. In any judicial proceeding to obtain a temporary order enforcing the arbitrator's award as issued under Section 7.7(d) of this Article, all Parties waive the right to a hearing and agree that such proceedings may be ex parte. Such

agreement does not waive any Party's right to participate in a hearing for a final order of enforcement. The court's order or orders enforcing the arbitrator's award shall be served on all Parties by hand or by delivery to their address as shown on this PLA (for a Union), as shown on their business contract for work under this PLA (for a Contractor) and to the representing Union (for an employee), by certified mail by the Party or Parties first alleging the violation.

(f) Any rights created by statute or law governing arbitration proceedings inconsistent with the above procedure or which interfere with compliance hereto are hereby waived by the Parties to whom they accrue.

(g) The fees and expenses of the arbitrator shall be equally divided between the Party or Parties initiating this procedure and the respondent Party or Parties.

Section 7.8 Liquidated Damages.

(a) If the arbitrator determines in accordance with Section 7.7 above that a work stoppage has occurred, the respondent Union(s) shall, within eight (8) hours of receipt of the Award, direct all the employees they represent on the project to immediately return to work. If the craft(s) involved do not return to work by the beginning of the next regularly scheduled shift following such eight (8) hour period after receipt of the arbitrator's Award, and the respondent Union(s) have not complied with their obligations to immediately instruct, order, and use their best efforts to cause a cessation of the violation and return the employees they represent to work, then the non-complying Union(s) shall each pay a sum as liquidated damages to the City, and each will pay an additional sum per shift, as set forth in (c), below, for each shift thereafter on which the craft(s) has not returned to work.

(b) If the arbitrator determines in accordance with Section 7.7 above that a lock out has occurred, the respondent Contractor(s) shall, within eight (8) hours after receipt of the award, return all the affected employees to work on the Project, or otherwise correct the violations found by the arbitrator. If the respondent Contractor(s) do not take such action by the beginning of the next regular scheduled shift following the eight (8) hour period, each non-complying respondent Contractor shall pay or give as liquidated damages, to the affected Union(s) (to be apportioned among the affected employees and the benefit funds to which contributions are made on their behalf, as designated by the arbitrator) and each shall pay an additional sum per shift, as set forth in (c), below, for each shift thereafter in which compliance by the respondent Contractor(s) has not been completed.

(c) The Parties agree that project delays caused by violations of this Article will cause the City to sustain damages. They agree that it would be impractical or extremely difficult to fix the amount of such damages. Therefore, the Parties agree that, in the event of a breach of either of these provisions, the Party in breach shall pay to the City the sum of not less than $10,000.00 and no more than $20,000.00 per shift from the time the arbitrator determines that a delay has occurred until the arbitrator determines that the project is again on construction schedule. The payment, when made, shall constitute a damages remedy of the City for the delay specified, but shall not prevent the City from seeking an injunctive or other monetary relief, including termination of this PLA. Payment of these sums as liquidated damages is not intended as a forfeiture or penalty within the meaning of California Civil Code sections 3275 or 3369, but instead, is intended to constitute liquidated damages to the City pursuant to section 1671 of the California Civil Code.

ARTICLE 8

WORK ASSIGNMENTS AND JURISDICTIONAL DISPUTES

Section 8.1 No Jobsite Disruption. There will be no strikes, work stoppages, picketing, sympathy strikes, slowdowns, or other interferences with the work because of jurisdictional disputes between Unions. The assignment of work will be solely the responsibility of the Contractor performing the work involved; and such work assignments will be in accordance with the Plan for Settlement of Jurisdictional Disputes in the Construction Industry (the "Plan") or any successor Plan.

Section 8.2 All jurisdictional disputes on this project shall be settled and adjusted according to the present Plan established by the Building and Construction Trades Department or any other plan or method of procedure that may be adopted by the Building and Construction Trades Department. Decisions rendered shall be final and binding and conclusive on the Contractors and Unions parties to this PLA.

All jurisdictional disputes shall be resolved without the occurrence of any of the activities prohibited in Article 7 (Work Stoppages and Lockouts), and the Contractor's assignment shall be adhered to until the dispute is resolved. Individuals violating this section shall be subject to immediate discharge.

Section 8.2.1 If a dispute arising under this Article involves the Southwest Regional Council of Carpenters or any of its subordinate bodies, an arbitrator shall be chosen by the procedures specified in Article V, Section 5, of the Plan from a list composed of Thomas Pagan, Thomas Angelo, Robert Hirsch, and John Kagel, and the

arbitrator's hearing on the dispute shall be held at the offices of the Council within fourteen (14) days of the selection of the arbitrator. All other procedures shall be as specified in the Plan.

Section 8.3 Failure to Comply. If any Union or Contractor fails to immediately and fully comply with the final decision rendered by the Plan, affected Union(s) or Contractor(s) may seek legal redress for such conduct, including, but not limited to, injunctive relief and/or damages.

Section 8.4 Pre-job Conference. It is required that a pre-job conference be held not later than fourteen (14) calendar days prior to the start of work by each Contractor for the Covered Project in accordance with the procedure described in Article 16.

ARTICLE 9

MANAGEMENT RIGHTS

Section 9.1 Contractor and City Rights. The Contractors and the City have the sole and exclusive right and authority to oversee and manage construction operations on Project Work without any limitations unless expressly limited by a specific provision of this PLA. In addition to the following and other rights of the Contractors enumerated in this PLA, the Contractors expressly reserve their management rights and all the rights conferred upon them by law. The Contractor's rights include, but are not limited to, the right to:

(a) Plan, direct, and control operations of all work; and

(b) Hire, promote, transfer, and layoff their own employees, respectively, as deemed appropriate to satisfy work and/or skill requirements; and

(c) Promulgate and require all employees to observe reasonable job rules and security and safety regulations; and

(d) Discharge, suspend, or discipline their own employees for just cause; and

(e) Utilize, in accordance with City approval, any work methods, procedures, or techniques, and select, use, and install any types or kinds of materials, apparatus, or equipment, regardless of source of manufacture or construction; and

(f) Assign and schedule work at their discretion; and

(g) Assign overtime, determine when it will be worked and the number and identity of employees engaged in such work, subject to such provisions in the applicable Schedule A(s) requiring such assignments be equalized or otherwise made in a nondiscriminatory manner.

Section 9.2 Specific City Rights. In addition to the following and other rights of the City enumerated in this PLA, the City expressly reserves its management rights and all the rights conferred on it by law and contract. The City's rights (and those of the Project Labor Coordinator on its behalf) include, but are not limited to the right to:

(a) Inspect any construction site or facility to ensure that the Contractor follows the applicable safety and other work requirements; and

(b) At its sole option, terminate, delay, and/or suspend any and all portions of the Project Work at any time; prohibit some or all work on certain days or during certain hours of the day to accommodate the ongoing operations of the City and/or to mitigate the effect of ongoing Project Work on businesses and residents in the neighborhood of the Project sites; and/or require any other operational or schedule changes it deems necessary, in its sole judgment, to meet Project deadlines and remain a good neighbor to those in the area of the Covered Projects. (In order to permit the Contractors and Unions to make appropriate scheduling plans, the City will provide the Project Labor Coordinator, and the affected Contractor[s] and Union[s] with reasonable notice of any changes it requires pursuant to this section); and

(c) Approve any work methods, procedures, and techniques used by Contractors whether or not these methods, procedures, or techniques are part of industry practices or customs; and

(d) Investigate and process complaints or disagreements, through its Project Labor Coordinator.

Section 9.3 Use of Materials. There should be no limitations or restrictions by the Union upon a Contractor's choice of materials or design, nor, regardless of source or location, upon the full use and utilization of equipment, machinery, packaging, precast, prefabricated, prefinished, or preassembled materials, tools, or other labor-saving devices, subject to the application of the California Public Contract and Labor Codes. Generally, the onsite installation or application of such items shall be performed by the craft having jurisdiction over such work.

Section 9.4 Special Equipment, Warranties, and Guaranties.

(a) It is recognized that certain equipment of a highly technical and specialized nature may be installed at Covered Project sites. The nature of the equipment, together with the requirements for manufacturer's warranties, may dictate that it be prefabricated, pre-piped, and/or pre-wired and that it be installed under the supervision and direction of the City's and/or manufacturer's personnel. The Unions agree that such equipment is to be installed without incident.

(b) The Parties recognize that the Contractor will initiate from time to time the use of new technology, equipment, machinery, tools, and other labor-savings devices and methods of performing Project Work. The Unions agree that they will not restrict the implementation of such devices or work methods. The Unions will accept and will not refuse to handle, install, or work with any standardized and/or catalogue parts, assemblies, accessories, prefabricated items, preassembled items, partially assembled items, or materials whatever their source of manufacture or construction.

(c) If any disagreement between the Contractor and the Unions concerning the methods of implementation or installation of any equipment, device, or item, or method of work arises, or whether a particular part or pre-assembled item is a standardized or catalog part or item, the work will proceed as directed by the Contractor, and the Parties shall immediately consult over the matter. If the disagreement is not resolved, the affected Union(s) shall have the right to proceed through the procedures set forth in Article 10.

ARTICLE 10

SETTLEMENT OF GRIEVANCES AND DISPUTES

Section 10.1 Cooperation and Harmony on Site.

(a) This PLA is intended to establish and foster continued close cooperation between management and labor. The Council shall assign a representative to this Project for the purpose of assisting the local Unions, and working with the Project Labor Coordinator, together with the Contractors, to complete construction of the Project Work economically, efficiently, continuously, and without any interruption, delays, or work stoppages.

(b) The Project Labor Coordinator, the Contractors, Unions, and employees collectively and individually, realize the importance to all Parties of maintaining continuous and uninterrupted performance of Project Work, and agree to resolve

disputes in accordance with the grievance provisions set forth in this Article or, as appropriate, those of Article 7 or 8.

(c) The Project Labor Coordinator shall observe the processing of grievances under this Article and Articles 7 and 8, including the scheduling and arrangements of facilities for meetings, selection of the arbitrator from the agreed-upon panel to hear the case, and any other administrative matters necessary to facilitate the timely resolution of any dispute; provided, however, it is the responsibility of the principal Parties to any pending grievance to ensure the time limits and deadlines are met.

Section 10.2 Processing Grievances. Any questions arising out of and during the term of this PLA involving its interpretation and application, which includes applicable provisions of the Schedule A's, but not alleged violations of Articles 7 or 8, shall be considered a grievance and subject to resolution under the following procedures.

Step 1. (a) Employee Grievances. When any employee subject to the provisions of this PLA feels aggrieved by an alleged violation of this PLA, the employee shall, through his local Union business representative or job steward, within ten (10) working days after the occurrence of the violation, give notice to the work site representative of the involved Contractor stating the provision(s) alleged to have been violated, the details of the alleged violation and the remedy sought to resolve the matter. A grievance shall be considered null and void if notice of the grievance is not given within the ten (10) day period. A business representative of the local Union or the job steward and the work site representative of the involved Contractor shall meet and endeavor to adjust the matter within ten (10) working days after timely notice has been given. If they fail to resolve the matter within the prescribed period, the grieving Party may, within ten (10) working days thereafter, pursue Step 2 of this grievance procedure provided the grievance is reduced to writing, setting forth the relevant information, including a short description thereof, the date on which the alleged violation occurred, and the provision(s) of the applicable agreement alleged to have been violated. Grievances and disputes settled at Step 1 shall be non-precedential except as to the Parties directly involved.

(b) Union or Contractor Grievances. Should the Union(s) or any Contractor have a dispute with the other Party(ies) and, if after conferring within ten (10) working days after the disputing Party knew or should have known of the facts or occurrence giving rise to the dispute, a settlement is not reached within five (5) working days, the dispute shall be reduced to writing and processed to Step 2 in

the same manner as outlined in Step 1(a) above for the adjustment of an employee complaint.

Step 2. The business manager of the involved local Union or his designee, together with the site representative of the involved Contractor, and the labor relations representative of the Project Labor Coordinator shall meet within seven (7) working days of the referral of the dispute to this second step to arrive at a satisfactory settlement thereof. If the Parties fail to reach an agreement, the dispute may be appealed in writing in accordance with the provisions of Step 3 within seven (7) calendar days after the initial meeting at Step 2.

Step 3. (a) If the grievance shall have been submitted but not resolved under Step 2, either the Union or Contractor Party may request in writing to the Project Labor Coordinator (with copy[ies] to the other Party[ies]) within seven (7) calendar days after the initial Step 2 meeting, that the grievance be submitted to an arbitrator selected from the agreed-upon list below, on a rotational basis in the order listed. Those arbitrators are: (1) Thomas Pagan; (2) David Hart; (3) Edna Francis; (4) Mike Rappaport; (5) Michael Prihar; (6) Fred Horowitz; and (7) Sara Adler. The decision of the arbitrator shall be final and binding on all Parties, and the fee and expenses of such arbitrations shall be borne equally by the involved Contractor(s) and the involved Union(s).

(b) Failure of the grieving Party to adhere to the time limits established herein shall render the grievance null and void. The time limits established herein may be extended only by written consent of the Parties involved at the particular step where the extension is agreed upon. The arbitrator shall have the authority to make decisions only on issues presented and shall not have the authority to change, amend, add to, or detract from any of the provisions of this PLA.

Section 10.3 Limit on Use of Procedures. Procedures contained in this Article shall not be applicable to any alleged violation of Article 7 or 8, with a single exception that any employee discharged for violation of Section 7.2 may resort to the procedures of this Article to determine only if he/she was, in fact, engaged in that violation.

Section 10.4 Notice. The Project Labor Coordinator (and the City, in the case of any grievance regarding the Scope of this PLA), shall be notified by the involved Contractor of all actions at Steps 2 and 3, and further, the Project Labor Coordinator shall, upon its own request, be permitted to participate fully in all proceedings at such steps.

ARTICLE 11

COMPLIANCE

Section 11.1 Compliance with All Laws. The Council and all Unions, Contractors, and their employees shall comply with all applicable federal and state laws, ordinances, and regulations including, but not limited to, those relating to safety and health, employment, and applications for employment. All employees shall comply with the safety regulations established by the City, the Project Labor Coordinator, and the Contractor. Employees must promptly report any injuries or accidents to a supervisor.

Section 11.2 Monitoring Compliance. The Parties agree that the City shall require, and that the Project Labor Coordinator and Council shall monitor, compliance by all Contractors with all federal and state laws and regulations that, from time to time may apply to Project Work. It shall be the responsibility of both the Council and the Project Labor Coordinator (on behalf of the City) to investigate or monitor compliance with these various laws and regulations. The Council may recommend to the Project Labor Coordinator and/or the City procedures to encourage compliance with these laws and regulations.

Section 11.3 Prevailing Wage Compliance. The Council or Union may refer all complaints regarding any potential prevailing wage violation to the Project Labor Coordinator, who may process, investigate, and resolve such complaints. The Council or Union, as appropriate, shall be advised in a timely manner with regard to the facts and resolution, if any, of any complaint. It is understood that this Section does not restrict any individual rights as established under the State Labor Code, including the rights of an individual to file a complaint with the State Labor Commissioner.

Section 11.4 Violations of Law. Based upon a finding of violation by the City of a federal and state law, and upon notice to the Contractor that it is in such violation, the City, in the absence of the Contractor remedying such violation, shall take such action as it is permitted by law or contract to encourage the Contractor to come into compliance, including, but not limited to, assessing fines and penalties and/or removing the offending Contractor from Project Work.

ARTICLE 12

SAFETY AND PROTECTION OF PERSON AND PROPERTY

Section 12.1 Safety.

(a) It shall be the responsibility of each Contractor to ensure safe working conditions and employee compliance with all applicable safety laws and regulations and any safety rules contained herein or established by the City, the Project Labor Coordinator, or the Contractor. It is understood that employees have an individual obligation to use diligent care to perform their work in a safe manner and to protect themselves and the property of the Contractor and the City.

(b) All Parties and Contractor employees shall be bound by the safety, security, and visitor rules established by the Contractor, the Project Labor Coordinator, and the City. These rules will be published and posted. An employee's failure to satisfy his/her obligations under this Section will subject him/her to discipline, up to and including discharge.

Section 12.2 Drug and Alcohol Testing Policy. The Parties agree to adopt the Drug and Alcohol Testing Policy attached hereto as Attachment C, which is the exclusive Drug and Alcohol Testing Policy for Covered Projects.

Section 12.3 Inspection. The inspection of shipments of equipment, machinery, and construction materials of every kind shall be performed at the discretion of the Contractor by individuals of its choice.

ARTICLE 13

TRAVEL AND SUBSISTENCE

Section 13.1 Travel expenses, travel time, subsistence allowances and/or zone rates, and parking reimbursements shall not be applicable to work under this PLA, except to the extent provided for in any applicable prevailing wage determination. Parking for employees covered by this PLA shall be provided by the Contractor(s) according to the provision of the Schedule A(s) existing on the Effective Date of this PLA and upon presentation of proof of any expense incurred.

ARTICLE 14

APPRENTICES

Section 14.1 Importance of Training. The Parties recognize the need to maintain continuing support of the programs designed to develop adequate numbers of competent workers in the construction industry, the obligation to capitalize on the availability of the local work force in the area served by the City, and the opportunities to provide continuing work on Covered Projects for City Residents and Targeted Workers. To these ends, and consistent with any laws or regulations, the Parties will facilitate, encourage, and assist City Residents and Targeted Workers commence and progress in Apprenticeship Programs and/or apprenticeship readiness programs in the construction industry leading to participation in such Apprenticeship Programs. The City, the Project Labor Coordinator, other City consultants, the Contractors, and the Council and Unions, will work cooperatively to identify, or establish and maintain, effective programs and procedures for persons interested in entering the construction industry and which will help prepare them for the entry into Apprenticeship Programs. Apprentices, if utilized, must be enrolled in a California Apprenticeship Council-approved Apprenticeship Program.

Section 14.2 Use of Apprentices.

(a) The Unions and Contractors agree to cooperate in referring and employing Apprentices up to the maximum percentage allowed by the State Labor Code and the standards of each State-Approved Apprenticeship Program. The minimum ratios for Apprentice to journeyperson hours worked shall be in compliance, at a minimum, with the applicable provisions of the State Labor Code relating to utilization of Apprentices. The City, unless otherwise required by law, shall encourage such utilization, and, both as to Apprentices and the overall supply of experienced workers, the Project Labor Coordinator will work with the Council, Apprenticeship Programs, and Contractors to assure appropriate and maximum utilization of Apprentices and the continuing availability of both Apprentices and journey persons.

(b) The Parties agree that all Contractors will comply with all applicable laws and regulations in the request for dispatch and employment of Apprentices.

(c) The Parties agree that Apprentices will not be dispatched to Contractors working under this PLA unless there is a journeymen or other Contractor employee working on the Project where the Apprentice is to be employed who is

qualified to assist and oversee the Apprentice's progress through the program in which he/she is participating.

ARTICLE 15

LEGAL ACTION

Section 15.1 Legal Action. The City, Council and Unions recognize the substantial legal costs (including all attorney's fees and associated disbursements) that might accrue with regard to any legal challenge over the adoption by the City of this PLA, and related to claims directly challenging the legality of this PLA, or a particular section or language that has been adopted herein. In the event of a legal challenge, the Council, on behalf of itself and affiliated Unions, agrees to seek to intervene in the legal action and actively participate in the litigation or other action to defend the legality of this PLA, or a particular section or language herein. The failure of the Council to seek to intervene in the legal action and actively participate to defend the legality of this PLA will constitute a material breach of this PLA. In the event the Council is denied leave to intervene in the legal action, the Council shall have its counsel coordinate with the City's counsel, at the Council's own expense, regarding how the Council can best support the City's legal position.

ARTICLE 16

PRE-JOB CONFERENCE

Section 16.1 Each Contractor is required to conduct a pre-job conference with the Unions not later than fourteen (14) calendar days prior to commencing work. The purpose of the conference will be to, among other things, convey craft manpower needs, the schedule of work for the Covered Project, project work rules, and propose preliminary Union work assignments. The Project Labor Coordinator may work with the Prime Contractor and Council to facilitate the scheduling of all pre-job conferences, but ensuring each Contractor conducts a pre-job conference in accordance with this Agreement is the responsibility of the Prime Contractor. All preliminary Union work assignments shall be disclosed by each Contractor at a pre-job conference. Should there be work within the scope of a Construction Contract for a Covered Project that was not previously assigned at a pre-job conference, or additional work be added to the scope of the Covered Project, the Contractor(s) performing such work will conduct a separate pre-job conference.

Any Union in disagreement with a proposed assignment shall notify the affected Contractor of its position in writing, with a copy sent to the Project Labor Coordinator, within seven (7) calendar days after the pre-job conference occurred. Within seven (7) calendar days after the period allowed for Union notices of disagreement with the Employer's proposed assignments, but prior to the commencement of any work, the Employer shall make final assignments in writing with copies sent to the Project Labor Coordinator and Council.

ARTICLE 17

LABOR/MANAGEMENT AND COOPERATION

Section 17.1 Joint Committee. The Parties to this PLA will form a joint committee consisting of three (3) representatives selected by the Council and three (3) representatives selected by the Project Labor Coordinator, to be chaired jointly by a representative of the Project Labor Coordinator and the Council. The purpose of the Committee shall be to promote harmonious and stable labor management relations on this Project, to ensure effective and constructive communication between labor and management Parties, to advance the proficiency of work in the industry, and to evaluate and ensure an adequate supply of skilled labor for all Project Work. Representatives of the City may participate upon its request, and all Parties will be invited to attend.

Section 17.2 Functions of Joint Committee. The Committee shall meet on a schedule to be determined by the Committee or at the call of the joint chairs, to discuss the administration of the PLA, the progress of the project, general labor management problems that may arise, and any other matters consistent with this PLA. Substantive grievances or disputes arising under Articles 7, 8, or 10 shall not be reviewed or discussed by this Committee, but shall be processed pursuant to the provisions of the appropriate Article.

The Project Labor Coordinator shall be responsible for scheduling of the meetings and the preparation of the agenda topics for the meetings, with input from the Unions, the Contractors, and the City. Notice of the date, time and place of meetings, shall be given to the Committee members at least three (3) days prior to the meeting. The City shall be notified of the meetings and invited to send a representative(s) to participate.

The Project Labor Coordinator shall prepare quarterly reports on Apprentice utilization and the training and employment of City Residents, and a schedule of Project work and estimated number of craft workers needed. The Committee, or

an appropriate subcommittee, may review such reports and make any recommendations for improvement, if necessary, including increasing the availability of skilled trades, and the employment of local residents or other individuals who should be assisted with appropriate training to qualify for Apprenticeship Programs.

Section 17.3 Subcommittees. The Committee may form subcommittees to consider and advise the full Committee with regard to safety and health issues affecting the Project and other similar issues affecting the overall Project, including any workers' compensation program initiated under this PLA.

ARTICLE 18

SAVINGS AND SEPARABILITY

Section 18.1 Savings Clause. It is not the intention of the City, the Project Labor Coordinator, Contractor, or the Union Parties to violate any laws governing the subject manner of this PLA. The Parties hereto agree that in the event any provision of this PLA is finally held or determined to be illegal or void as being in contravention of any applicable law or regulation, the remainder of the PLA shall remain in full force and effect unless the part or parts so found to be void are wholly inseparable from the remaining portions of this PLA. Further, the Parties agree that if and when any provision(s) of this PLA is finally held or determined to be illegal or void by a court of competent jurisdiction, the Parties will promptly enter into negotiations concerning the substantive effect of such decision for the purposes of achieving conformity with the requirements of any applicable laws and the intent of the Parties hereto. If the legality of this PLA is challenged and any form of injunctive relief is granted by any court, suspending temporarily or permanently the implementation of this PLA, then the Parties agree that all Project Work that would otherwise be covered by this PLA should be continued to be bid and constructed without application of this PLA so that there is no delay or interference with the ongoing planning, bidding, and construction of any Project Work.

Section 18.2 Effect of Injunctions or Other Court Orders. The Parties recognize the right of the City to withdraw, at its absolute discretion, the utilization of the PLA as part of any bid specification should a court of competent jurisdiction issue any order, or any applicable statute that could result, temporarily or permanently, in delay of the bidding, awarding, and/or construction on the Project.

ARTICLE 19

WAIVER

Section 19.1 Waiver. A waiver of or a failure to assert any provisions of this PLA by any or all of the Parties hereto shall not constitute a waiver of such provision for the future. Any such waiver shall not constitute a modification of the PLA or change in the terms and conditions of the PLA and shall not relieve, excuse or release any of the Parties from any of their rights, duties, or obligations hereunder.

ARTICLE 20

AMENDMENTS

Section 20.1 Amendments. The provisions of this PLA can be renegotiated, supplemented, rescinded, or otherwise altered only by mutual agreement in writing, hereafter signed by the Parties.

ARTICLE 21

DURATION OF THE PLA

Section 21.1 Duration. This Agreement shall be effective on June 16, 2020, provided that the Council has signed the Agreement. The Agreement shall continue in full force and effect until all of the work within the scope of a Covered Contract is completed and accepted by the City.

Section 21.2 Turnover and Final Acceptance of Completed Work.

(a) Construction of any phase, portion, section, or segment of Project Work shall be deemed complete when such phase, portion, section or segment has been turned over to the City by the Contractor and the City has accepted such phase, portion, section, or segment. As areas and systems of the Project are inspected and construction-tested and/or approved and accepted by the City or third parties with approval of the City, the PLA shall have no further force or effect on such items or areas, except when the Contractor is directed by the City to engage in repairs or modifications required by its Contract(s) with the City.

(b) Notice of each final acceptance received by the Contractor will be provided to the Council with the description of what portion, segment, etc. has

been accepted. Final acceptance may be subject to a "punch" list, and in such case, the PLA will continue to apply to each such item on the list until it is completed to the satisfaction of the City and Notice of Acceptance is given by the City or its representative to the Contractor.

Section 21.3 Continuation of Schedule A's. Schedule A's incorporated as part of this PLA shall continue in full force and effect, as previously stated, until the Contractor and Union Parties to the collective bargaining agreement(s), which are the basis for such Schedule A's, notify the Project Labor Coordinator of the mutually agreed upon changes in such agreements and their effective date(s).

The Parties agree to recognize and implement all applicable changes on their effective dates, except as otherwise provided by this PLA; provided, however, that any such provisions negotiated in said collective bargaining agreements will not apply to work covered by this PLA if such provisions are less favorable to the Contractor under the PLA than those uniformly required of Contractors for construction work normally covered by those agreements; nor shall any provision be recognized or applied if it may be construed to apply exclusively or predominantly to work covered by this PLA. Any disagreement between the Parties over the incorporation into a Schedule A of any such provision agreed upon in a negotiation of the local collective bargaining agreement that is the basis for a Schedule A shall be resolved under the procedures established in Article 10.

Section 21.4 Final Termination. Final termination of all obligations, rights, and liabilities, and disagreements shall occur upon receipt by the Council of a Notice from the City saying that no work remains within the scope of the PLA.

Section 21.5 Pure Water Program Phase II Projects. The City and the Unions intend to have this Agreement or a succeeding Agreement include all construction projects in Pure Water Program Phase II. The Pure Water Program Phase II Projects are in the early development stage and cannot be specifically identified at this time to be included in the scope of this Agreement. Therefore, to reopen negotiations to include Pure Water Program Phase II Projects into this Agreement, the Council shall send written notice to the City's Project Labor Coordinator after the City has approved Pure Water Program Phase II Projects' Environmental Impact Report and no later than ninety (90) days after the City's final approval of the Environmental Impact Report.

ARTICLE 22

WORK AND ECONOMIC OPPORTUNITY

Section 22.1 The magnitude, duration, and complexity of the Pure Water Program Phase I Projects will require large numbers of skilled craft personnel and create significant economic opportunities for City Residents, Targeted Workers, Disadvantaged Business Enterprises and other businesses. It is therefore the understanding and intention of the Parties to use the opportunities provided by the extensive amount of work to collaborate and implement programs and procedures, which may include, for example, North America's Building Trades Unions Multi-Craft Core Curriculum (MC3) apprenticeship readiness programs, to prepare persons, especially City Residents and Targeted Workers, for entrance into Apprenticeship Programs to begin or continue their construction careers on Covered Projects. Further, the Parties agree to maximize the inclusion of Disadvantage Business Enterprises through outreach, training, and subcontracting for Covered Projects. With assistance from the Project Labor Coordinator, the City, the Contractors, the Unions and their affiliated regional and national organizations will work jointly to promptly develop and implement procedures for the identification of craft needs, the scheduling of work to facilitate the utilization of available craft workers, and the securing of services of craft workers in sufficient numbers to meet the high demands of the Project Work to be undertaken.

Section 22.2 The City, together with the Parties, supports the development of increased numbers of skilled construction workers who are City Residents and Targeted Workers to meet the labor needs of Covered Projects. Towards that end, the Parties, together with the City and its Project Labor Coordinator, agree to develop and implement a work opportunities program for City Residents and Targeted Workers to maximize construction career opportunities and create a construction career pipeline to becoming employed on Covered Projects. Further, the City together with the Parties, will create opportunities for Disadvantaged Business Enterprises consistent with the City's goals and inclusion programs for such businesses. In furtherance of the foregoing, the Council and Unions specifically agree to work with the City and the Project Labor Coordinator to:

(a) Collaborate with existing or newly created MC3 apprenticeship readiness programs in San Diego to offer opportunities for City Residents and Targeted Workers, including students, to enroll in free short-term construction apprenticeship readiness training to prepare them to enter into Apprenticeship Programs and become employed by a Contractor on a Covered Project. The

Project Labor Coordinator, with the assistance of the Parties, will assist with the recruitment, career placement, and tracking of such City Residents and Targeted Workers who graduate from these apprenticeship readiness programs; and

(b) The Parties will cooperate and collaborate with the City and Project Labor Coordinator to conduct outreach to and include City Residents and Targeted Workers from traditionally underrepresented segments of the City's population in the construction craft workforce for each Covered Project; and

(c) The Council will provide accurate data on a quarterly basis to the City and Project Labor Coordinator pertaining to their level of economic support provided to meet these objectives. Further, the Project Labor Coordinator shall produce detailed quarterly reports for the City and Council to measure and report the outcomes of the policies, requirements, and programs established in this Agreement; and

(d) The Unions will partner with the City and Project Labor Coordinator to conduct outreach and recruitment activities by establishing or continuing to maintain existing centers, programs, and events to facilitate the entry of City Residents and Targeted Workers into the building and construction trades. These programs shall serve as a resource for preliminary orientation, assessment of construction aptitude, referral to MC3 apprenticeship readiness programs or Apprenticeship Programs, referral to hiring halls, and provide tailored orientation and mentoring for women and Targeted Workers; and

(e) The Unions shall assist City Residents and Targeted Workers with contacting the Apprenticeship Programs for the crafts and trades they are interested in. The Unions shall assist City Residents and Targeted Workers who are seeking employment on Covered Projects and provide opportunities for Union membership by assessing their work experience and giving them credit for provable past experience in their relevant craft or trade, including experience gained working for non-Union Contractors. The Unions shall put on their rolls qualified bona fide City Residents and Targeted Workers for employment on Covered Projects.

Section 22.3 Joint Subcommittee on Work and Economic Opportunity. To carry out the intent and purpose of this Article, a subcommittee of the Labor Management Committee established pursuant to Article 17 shall be established, jointly chaired by a designee of the City and a designee of the Council, to oversee the effective development and implementation of the programs and policies described herein, and to work with representatives of each apprenticeship committee and representatives of the MC3 apprenticeship readiness programs to maximize

employment opportunities for City Residents and Targeted workers who reflect the diversity of the communities surrounding each Covered Project and who may not be previously qualified for the construction career opportunities created by the Covered Projects. The subcommittee will meet as necessary at the call of the joint chairs to promptly facilitate its purposes in an expeditious manner as soon as this PLA becomes effective. In addition to the joint chairs, the membership of the committee will consist of at least three (3) representatives of the signatory local Unions and three (3) representatives of Contractors (or organization to which the Contractors belong) signatory to this PLA and experienced in overseeing and participating in Apprenticeship Programs.

ARTICLE 23

HELMETS TO HARDHATS

Section 23.1 Veterans Entry into Building and Construction Trades. The Parties recognize a desire to facilitate the entry into the building and construction trades of Veterans who are interested in careers in the building and construction industry. The Contractors and Unions agree to utilize the services of the Center for Military Recruitment, Assessment and Veterans Employment (hereinafter "Center") and the Center's "Helmets to Hardhats" program to serve as a resource for preliminary orientation, assessment, and construction aptitude, referral to Apprenticeship Programs or hiring halls, counseling and mentoring, support network, employment opportunities, and other needs as identified by the Parties.

Section 23.2 Integrated Database. The Unions and Contractors agree to coordinate with the Center to create and maintain an integrated database of Veterans interested in working on this Covered Project and of apprenticeship and employment opportunities for this Covered Project.

In witness whereof, the Parties have caused this Project Labor Agreement for City of San Diego Pure Water Program Phase I Projects to be executed as of the date and year above stated.

Dated: July 9, 2020

SAN DIEGO BUILDING AND CONSTRUCTION TRADES COUNCIL

By: DocuSigned by: ADB86106CE1E414...

Tom Lemmon, Business Manager

SIGNATORY UNIONS AND
(See Attached)

SIGNATORY UNIONS

By: DocuSigned by: Michael Patterson 38B4C81867E341A...

Allied Workers Local 5

By: Chad Boggio Chad Boggio

Bricklayer & Allied Crafts Local 4

By: DocuSigned by: 4111C0A1543D4C8...

Electrical Workers Local 569

By: DocuSigned by: 3380E1140A31459...

Glaziers, Floor Coverings & Painters Local 1399

By: DocuSigned by: Valentine R. Macedo AC599327876441...

Laborers Local 89

By: DocuSigned by: James Preciado

Plasterer Tenders Local 1414

By:

Operating Engineers Local 12

By: DocuSigned by: Mike Hartley 363A0846720A48F...

Plumbers & Pipefitters Local 230

By: DocuSigned by: Paul Colmenero 97581004B0E0439...

Roofers & Waterproofers Local 45

By: DocuSigned by: B569A3D2C62940C...

Laborers Local 1184

By: DocuSigned by: Ed Learn AEBFEA548C4F413...

Laborers Local 345

By: DocuSigned by: Ricardo Perez 8C144FFD6F5F464...

UA Local 345

By: DocuSigned by: Stephen Aravian B66C6F62284F439...

Southwest Regional Council of Carpenters

By: DocuSigned by: Luis Miramontes 997D1F49D5364AD...

Boilermakers Local 92

By: DocuSigned by: Jack Alvarado 5C661A00E44B47F...

Cement Masons Local 500 / Area 744

By: Frank Belio, Jr. For BM Gazzaniga

Elevator Constructors Local 18

By: DocuSigned by: David Osborne 0879DF11AEC34C3...

Iron Workers Local 229

By: DocuSigned by: Tom Castleman D99E7C175E1E4A7...

Plasterers Local 200

By:

Operating Engineers Local 12

By:

Operating Engineers Local 12

By: DocuSigned by: Todd Barry B9584FD2117949F...

Road Sprinkler Fitters Local 669

By: DocuSigned by: Dave Gauthier D3C0E4114A0C482...

Sheet Metal Workers Local 206

By: DocuSigned by: Douglas R Tracy E86FE77945CC47E...

Sheet Metal Workers Local 206

By: DocuSigned by: Jose Estrada 530AF0FCACB1494...

Teamsters Local 166

By: DocuSigned by: 3380E1140A31459...

Tradeshow & Sign Craft Local 831

By: DocuSigned by: Dayna Renoise ...493...

Laborers Local 300

J.R. FILANC CONSTRUCTION COMPANY, INC.
740 North Andreasen Drive, Escondido, California 92029 Ph 760-941-7130 Fax 760-941-3969 www.filanc.com

FILANC

ATTACHMENT A – LETTER OF ASSENT

To be signed by all Contractors awarded work covered by the Project Labor Agreement prior to commencing work.

Feb. 14, 2023

Project Labor Coordinator
City of San Diego

Attention: Lea Fields-Bernard

Re: City of San Diego Project Labor Agreement for Pure Water Program Phase I Project

Dear Ms. Fields-Bernard:

This is to confirm J.R. Filanc Construction Company, Inc. agrees to be party to and bound by the City of San Diego Project Labor Agreement for Construction of Pure Water Program Phase I Projects, effective May 1, 2020, as such Agreement may from time to time be amended by the negotiating Parties or interpreted pursuant to its terms. Such obligation to be a Party and bound by this Agreement shall extend to all work covered by the Agreement undertaken by this Company on the Project pursuant to K-23-2119-DBB-3-C; Pure Water Program (PCP) Central Area Small-Scale Facility, and this Company shall require all of its subcontractors of whatever tier to be similarly bound for all work within the scope of the Agreement by signing and furnishing to you an identical Letter of Assent prior to their commencement of work.

Sincerely,

J.R. Filanc Construction

By:

Omar Rodea, President

[Copies of this Letter must be submitted to the Project Labor Coordinator and to the Council consistent with Article 3, Section 3.3(b)]

ATTACHMENT B-1 – WORKFORCE DISPATCH REQUEST FORM

The City of San Diego's Project Labor Agreement for Pure Water Program Phase I Projects establishes a goal of at least thirty-five percent (35%) of the total craft hours on each Covered Project be performed by City Residents. The Unions and Contractors agree that, to the extent allowed by law, and as long as they possess the requisite skills and qualifications, City Residents shall be first referred for Project Work. A "City Resident" is defined as a City of San Diego permanent resident at the time of initial employment on a Covered Project or a Veteran residing anywhere.

*The list of qualifying zip codes for City Residents includes: 92014, 92037, 92038, 92067, 92093, 92101, 92102, 92103, 92104, 92105, 92106, 92107, 92108, 92109, 92110, 92111, 92113, 921 14, 92115, 92116, 92117, 92119, 92120, 92121, 92122, 92123, 92124, 92126, 92127, 92128, 92129, 92130, 92131, 92132, 92134, 92137, 92138, 92139, 92145, 92154, 92166, 92167, 92169, 92171, 92173, 92177.

C O N T R A C T O R U S E O N L Y

Please complete and fax or email this form to the applicable union to request craft workers that fulfill the hiring requirements for this project. After faxing your request, please call the Local to verify receipt and substantiate their capacity to furnish workers as specified below. Please print your Fax or Email Transmission Verification Reports and keep copies for your records.

TO:	Local Union and #	
	Email	
	Fax	

CC:	**City of San Diego Project Labor Coordinator**	
	Email	
	Fax	

FROM:	Contractor	
	Issued by	
	Email	
	Phone	
	Fax	

UNION CRAFT WORKER REQUEST:

Craft Classification	Journeyperson or Apprentice	City Resident and/or Veteran	# of Workers
	☐ JM ☐APP	YES*	
	☐ JM ☐APP	YES*	
	☐ JM ☐APP	YES*	
	☐ JM ☐APP	YES*	

WORKER REPORTING INSTRUCTIONS:

Reporting Date:	
Reporting Time:	
Project Name:	
Project Location:	
Reporting To:	
On Site Phone:	
Special Instructions:	

U N I O N U S E O N L Y

Please complete the "Union Use Only" section and fax or email both pages to the requesting Contractor and Project Labor Coordinator.

Date Dispatch Received:	
Dispatch Received by:	

Date Worker(s) Dispatched:

Name	Veteran (Y/N)	Zip Code	JM or App
			☒ JM ☐APP
			☐ JM ☐APP
			☐ JM ☒APP
			☐ JM ☐APP

ATTACHMENT B-2 – CONTRACTOR CORE WORKFORCE FORM

CONTRACTOR INFORMATION			
Project Name:			
Contractor/Firm Name:			
Prime Tier:			
Submitted by:			
Email:		Phone:	

In accordance with the Project Labor Agreement, Article 4, Section 4.6 (f), a Core Employee must be either a journeyperson or Apprentice and appear on the Contractor's active payroll for at least ninety (90) of the last one-hundred-eighty (180) working days prior to being designated as a Core Employee; and must possess any license required by state or federal law for the Project Work to be performed; and must have the ability to safely perform the basic functions of the applicable.

Prior to each Contractor performing any work on a Covered Project, each Contractor shall provide a list of Core Employees to the Project Labor Coordinator and the Council. After submitting the Core Employee list prior to commencing work, Contractors shall not make any changes or substitutions to the Core Employee list for the duration of the Covered Project. Failure to submit the Core Employee list prior to work commencing will prohibit the Contractor from using any Core Employees for 30 calendar days after the list is provided to the Project Labor Coordinator and Council.

Please check all that apply:

☐ Our firm will not be self-performing any work on this project.
We will be subcontracting our work to: _____

☐ PLA Section 4.6 regarding Core Employees is not applicable to Contractors that are signatory to one or more Schedule As, which are the Master Labor Agreements of the Unions. If your company is signatory, please list the union and local number below. For crafts that you are not signatory, please complete the core employee list below.

Indicate Signatory Union Trade: _____ Local # _____
Indicate Signatory Union Trade: _____ Local # _____
Indicate Signatory Union Trade: _____ Local # _____

☐ We are not a union signatory contractor and will be using core employees on this project as indicated below:

Craft/Trade	Employee Name	MC3 Apprentice Y/N?	Last 4 SSN	Hire Date	Date Last Employed

ATTACHMENT C – DRUG AND ALCOHOL TESTING POLICY

The Parties recognize the problems that drug and alcohol abuse have created in the construction industry and the need to develop drug and alcohol abuse prevention programs. Accordingly, the Parties agree that in order to enhance the safety of the workplace and to maintain a drug and alcohol-free work environment, individual Contractors shall require applicants or employees to undergo drug and alcohol testing in accordance with this PLA and this policy, Attachment C – Drug and Alcohol Testing Policy, hereafter "Policy."

1. It is understood that the use, possession, transfer, or sale of illegal drugs, narcotics, or other unlawful substances, as well as being under the influence of alcohol and the possession of or consuming alcohol is absolutely prohibited while employees are on the Contractor's job premises or while working on any jobsite in connection with work performed under the PLA.

2. No Contractor may implement a drug and alcohol testing program that does not conform in all respects to the provisions of this Policy.

3. No Contractor may implement drug and alcohol testing at any jobsite unless written notice is given to the Union setting forth the location of the jobsite, a description of the project under construction, and the name and telephone number of the Prime Contractor's project manager. Said notice shall be provided at the pre-job conferences for each Covered Project. Failure to give such notice shall make any drug and alcohol testing engaged in by the Contractor a violation of the Agreement and subject to the Article 10 grievance procedure.

4. A Contractor who elects to implement drug and alcohol testing pursuant to this Policy shall require all craft employees on the Covered Project to be tested. With respect to individuals who become employed on the Covered Project subsequent to the proper implementation of a valid drug and alcohol testing program, such test shall be administered upon the commencement of employment on the project, whether by referral from a Union Dispatch Office, transfer from another project, or another method. Individuals who were employed on the project prior to proper implementation of a valid drug and alcohol testing program may only be subjected to testing for the reasons set forth in paragraphs 5(g)(l) through 5(g)(3) and paragraphs 6(a) through 6(e) of this Policy. Refusal to undergo such testing shall be considered sufficient grounds to deny employment on the project.

5. The following procedure shall apply to all drug and alcohol testing:

    a. The Contractor may request urine samples only. The applicant or employee shall not be observed when the urine specimen is given. An applicant or employee, at his or her sole option, shall, upon request, receive a blood test in lieu of a urine test. No employee of the Contractor shall draw blood from a bargaining unit employee, touch

or handle urine specimens, or in any way become involved in the chain of custody of urine or blood specimens. A Union Business Representative, subject to the approval of the individual applicant or employee, shall be permitted to accompany the applicant or employee to the collection facility to observe the collection, bottling, and sealing of the specimen.

b. A Contractor may request an applicant or employee promptly, within four (4) hours of the Contractor's request, perform an alcohol breathalyzer test at a certified laboratory only, and cutoff levels shall be those mandated by applicable state or federal law.

c. The testing shall be done by a laboratory approved by the Substance Abuse & Mental Health Services Administration (SAMHSA), which is chosen by the Contractor and the Union.

d. An initial test shall be performed using the Enzyme Multiplied Immunoassay Technique (EMIT). In the event a question or positive result arises from the initial test, a confirmation test must be utilized before action can be taken against the applicant or employee. The confirmation test will be by Gas Chromatography/Mass Spectrometry (GC/MS). Cutoff levels for both the initial test and confirmation test will be those established by SAMHSA and this Policy. Should these SAMHSA levels be changed during the course of the PLA or new testing procedures are approved, then these new regulations will be deemed as part of this existing PLA. Confirmed positive samples will be retained by the testing laboratory in secured long-term frozen storage for a minimum of one (1) year. Handling and transportation of each sample must be documented through strict chain-of-custody procedures.

e. In the event of a confirmed positive test result, the applicant or employee may request, within forty-eight (48) hours, a sample of his/her specimen from the testing laboratory for purposes of a second test to be performed at a second laboratory, designated by the Union and approved by SAMHSA. The retest must be performed within ten (10) days of the request. Chain of custody for this sample shall be maintained by the Contractor between the original testing laboratory and the Union's designated laboratory. Retesting shall be performed at the applicant's or employee's expense. In the event of conflicting test results, the Contractor may require a third test, at the Contractor's expense.

f. If, as a result of the above testing procedure, it is determined that an applicant or employee has tested positive, this shall be considered sufficient grounds to deny the applicant or employee his/her employment on the project.

g. No individual who tests negative for drugs and alcohol pursuant to the above procedure and becomes employed on the project shall again be subjected to drug and alcohol testing with the following exceptions:

    1) Employees who are involved in industrial accidents resulting in damage to plant, property, or equipment or injury to him/her or others may be tested for drugs or alcohol pursuant to the procedures stated hereinabove.

2) The Contractor may test employees following thirty (30) days' advance written notice to the employee(s) to be tested and to the applicable Union. Notice to the applicable Union shall be sent by certified mail to the affected Union with a copy to the Project Labor Coordinator. Such testing shall be pursuant to the procedures stated hereinabove.

3) The Contractor may test an employee where the Contractor has reasonable cause to believe that the employee is impaired from performing his/her job. Reasonable cause shall be defined as being aberrant or unusual behavior, the type of which is a recognized and accepted symptom of impairment (e.g., slurred speech, unusual lack of muscular coordination). Such behavior must be actually observed by at least two (2) persons, one (1) of whom shall be a supervisor who has been trained to recognize the symptoms of drug and alcohol abuse or impairment and the other of whom shall be the Job Steward. If the Job Steward is unavailable or there is no Job Steward on the Covered Project, the other person shall be a member of the applicable Union's bargaining unit. Testing shall be pursuant to the procedures stated hereinabove. Employees who are tested pursuant to the exceptions set forth in this paragraph and who test positive will be removed from the Contractor's payroll.

h. Applicants or employees who do not test positive shall be paid for all time lost while undergoing drug and alcohol testing. Payment shall be at the applicable wage and benefit rates set forth in the applicable Union's Master Labor Agreement. Applicants who have been dispatched from the Union and who are not put to work pending the results of a test will be paid waiting time until such time as they are put to work. It is understood that an applicant must pass the test as a condition of employment. Applicants who are put to work pending the results of a test will be considered probationary employees.

6. The Contractors will be allowed to conduct periodic jobsite drug and alcohol testing on the Project under the following conditions:

a. The entire jobsite must be tested, including any employee or subcontractor's employee who worked on that project three (3) working days before or after the date of the test;

b. Jobsite testing cannot commence sooner than fifteen (15) days after start of the work on the project;

c. Prior to start of periodic testing, a Business Representative will be allowed to conduct an educational period on company time to explain periodic jobsite testing program to affected employees;

d. Testing shall be conducted by an SAMHSA-certified laboratory, pursuant to the provisions set forth in paragraph 5 hereinabove.

e. Only two (2) periodic tests may be performed in a twelve (12)-month period.

7. It is understood that the unsafe use of prescribed medication, or where the use of prescribed medication impairs the employee's ability to perform work, is a basis for the Contractor to remove the employee from the jobsite.

8. Any grievance or dispute that may arise out of the application of this Policy shall be subject to the grievance and arbitration procedures set forth in the PLA.

9. The establishment or operation of this Policy shall not curtail any right of any employee found in any law, rule, or regulation. Should any part of this Policy be found unlawful by a court of competent jurisdiction or a public agency having jurisdiction over the Parties, the remaining portions of the Agreement shall be unaffected, and the Parties shall enter negotiations to replace the affected provision.

10. Present employees, if tested positive, shall have the prerogative for rehabilitation program at the employee's expense. When such program has been successfully completed, the Contractor shall not discriminate in any way against the employee. If work for which the employee is qualified exists, he/she may be reinstated.

11. The Contractor agrees that results of urine and blood tests performed hereunder will be considered medical records held confidential to the extent permitted or required by law. Such records shall not be released to any persons or entities other than designated Contractor representatives and the applicable Union. Such release to the applicable Union shall only be allowed upon the signing of a written release by the employee, and the information contained therein shall not be used to discourage the employment of the individual applicant or employee on any subsequent occasion.

12. Employees who seek voluntary assistance for substance abuse may not be disciplined for seeking such assistance. Requests from employees for such assistance shall remain confidential and shall not be revealed to other employees or management personnel without the employee's consent. Employees enrolled in substance abuse programs will be subject to all Contractor rules, regulations, and job performance standards with the understanding that an employee enrolled in such a program is receiving treatment for an illness.

13. The Contractor shall indemnify and hold the Union harmless against any and all claims, demands, suits, or liabilities that may arise out of the application of this Policy.

14. This Policy shall constitute the only Policy in effect between the Parties concerning drug and alcohol abuse, prevention, and testing. Any modifications thereto must be accomplished pursuant to collective bargaining negotiations between the Parties.

SPECIMEN REPORTING CRITERIA

Initial Test Analyte	Initial Test Cutoff [1]	Confirmatory Test Analyte	Confirmatory Test Cutoff Concentration
Marijuana metabolites (THCA)[2]	50 ng/ml [3]	THCA	15 ng/ml
Cocaine metabolite (Benzoylecgonine)	150 ng/ml 3	Benzoylecgonine	100 ng/ml
Codeine/ Morphine	2000 ng/ml	Codeine Morphine	2000 ng/ml 2000 ng/ml
Hydrocodone/ Hydromorphone	300 ng/ml	Hydrocodone Hydromorphone	100 ng/ml 100 ng/ml
Alcohol	0.02%	Ethanol	0.02%
Oxycodone/ Oxymorphone	100 ng/ml	Oxycodone Oxymorphone	100 ng/ml 100 ng/ml
6-Acetylmorphine	10 ng/ml	6-Acetylmorphine	10 ng/ml
Phencyclidine	25 ng/ml	Phencyclidine	25 ng/ml
Amphetamine/ Methamphetamine	500 ng/ml	Amphetamine Methamphetamine	250 ng/ml 250 ng/ml
MDMA[4]/MDA[5]	500 ng/ml	MDMA MDA	250 ng/ml 250 ng/ml
Initial Test Analyte	Initial Test Cutoff	Confirmatory Test Analyte	Confirmatory Test Cutoff Concentration
Barbiturates	300 ng/ml	Barbiturates	200 ng/ml
Benzodiazepines	300 ng/ml	Benzodiazepines	300 ng/ml
Methadone[6]	300 ng/ml	Methadone	100 ng/ml
Methaqualone	300 ng/ml	Methaqualone	300 ng/ml
Propoxyphene	300 ng/ml	Propoxyphene	100 ng/ml

[1] For grouped analytes (i.e., two or more analytes that are in the same drug class and have the same initial test cutoff):

Immunoassay: The test must be calibrated with one analyte from the group identified as the target analyte. The cross-reactivity of the immunoassay to the other analyte(s) within the group must be 80 percent or greater; if not, separate immunoassays must be used for the analytes within the group.

Alternate technology: Either one analyte or all analytes from the group must be used for calibration, depending on the technology. At least one analyte within the group must have a concentration equal to or greater than the initial test cutoff or, alternatively, the sum of the analytes present (i.e., equal to or greater than the laboratory's validated limit of quantification) must be equal to or greater than the initial test cutoff.

[2] An immunoassay must be calibrated with the target analyte, 9-tetrahydrocannabinoJ-9- carboxylic acid (THCA).

[3] **Alternate technology (THCA and benzoylecgonine):** The confirmatory test cutoff must be used for an alternate technology initial test that is specific for the target analyte (i.e., 15 ng/ml for THCA, 100 ng/ ml for benzoylecgonine).

[4] Methylenedioxymethamphetamine (MDMA)

[5] Methylenedioxyamphetamine (MDA)

[6] Employees with a prescription for methadone who are using the medication as prescribed, and are not impaired and can safely perform their work, will not be considered to have violated this Policy.

MEMORANDUM OF UNDERSTANDING REGARDING
"QUICK" DRUG SCREENING TESTS PURSUANT TO
ATTACHMENT C – DRUG AND ALCOHOL TESTING POLICY

It is hereby agreed between the Parties hereto that a Contractor who has otherwise properly implemented drug and alcohol testing, as set forth in the Policy, shall have the right to offer an applicant or employee a "quick" drug screening test. This "quick" screen test shall consist either of the "ICUP" urine screen or similar test or an oral screen test. The applicant or employee shall have the absolute right to select either of the two "quick" screen tests, or to reject both and request a full drug test.

An applicant or employee who selects one of the "quick" screen tests, and who passes the test, shall be put to work immediately. An applicant or employee who fails the "quick" screen test, or who rejects the "quick" screen tests, shall be tested pursuant to the procedures set forth in the Policy. The sample used for the "quick" screen test shall be discarded immediately upon conclusion of the test. An applicant or employee shall not be deprived of any rights granted to them by the Policy as a result of any occurrence related to the "quick" screen test.

APPENDIX A – SAN DIEGO PURE WATER PROGRAM PHASE I COVERED PROJECTS

1. Morena PS/PL Construction Package 1: Morena Pump Station

- **Associated Pure Water Project:** Morena PS/PL Project
- **Summary:** The package is the construction of a new pump station that will transport approximately 32 mgd of wastewater to the NCWRP, where it will be treated before being sent to the NCPWF for further purification. Construction of the pump station will be on Sherman Street.
- **Summary of Major Construction Package Components**
  - 4+1 Dual Stage Sewer Pump Station
  - Screening Facility
  - High Purity Oxygen System
  - 48-inch to 60-inch diameter influent diversion sewers in Friars Road
  - 66-inch Overflow Sewer
  - Electrical and Instrumentation

Morena Pump Station Rendering and Site Plan

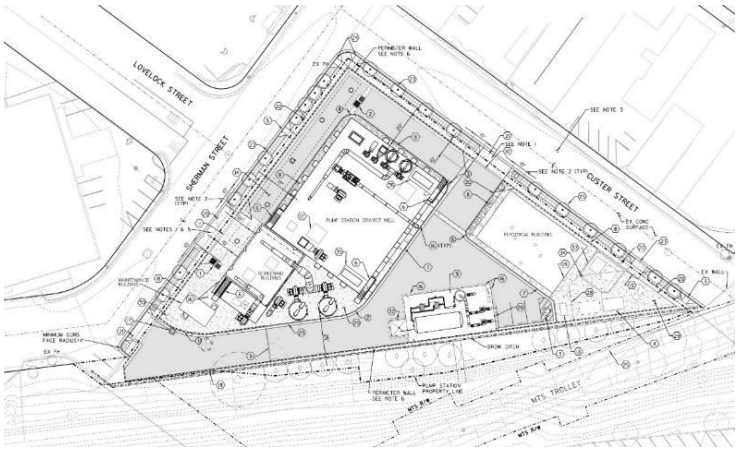

2. Morena PS/PL Construction Package 2: Morena Northern Alignment and Tunnels

- **Associated Pure Water Project:** Morena PS/PL Project
- **Summary:** Two pipelines that will start at approximately Genesee Avenue/Highway 52, and will continue through University City to the NCWRP. Three short length tunnels are included in this section, each approximately 1000 feet; one at Highway 52, one at Rose Creek in University City and one at Interstate 805. One pipeline will transport wastewater to the NCWRP, while the other will transport salt and contaminants removed from the water at the NCPWF to the Point Loma Wastewater Treatment Plant.
- **Summary of Major Construction Package Components**
  - 4 miles of 48-inch force main
  - 4 miles of 36-inch brine/centrate pipeline
  - Tunnel crossing of I-805
  - Tunnel crossing of MTS/NCTD railroad at Rose Creek Canyon
  - Tunnel crossing at San Clemente Creek

Morena Conveyance Northern, Middle and Southern Segments Site Plan

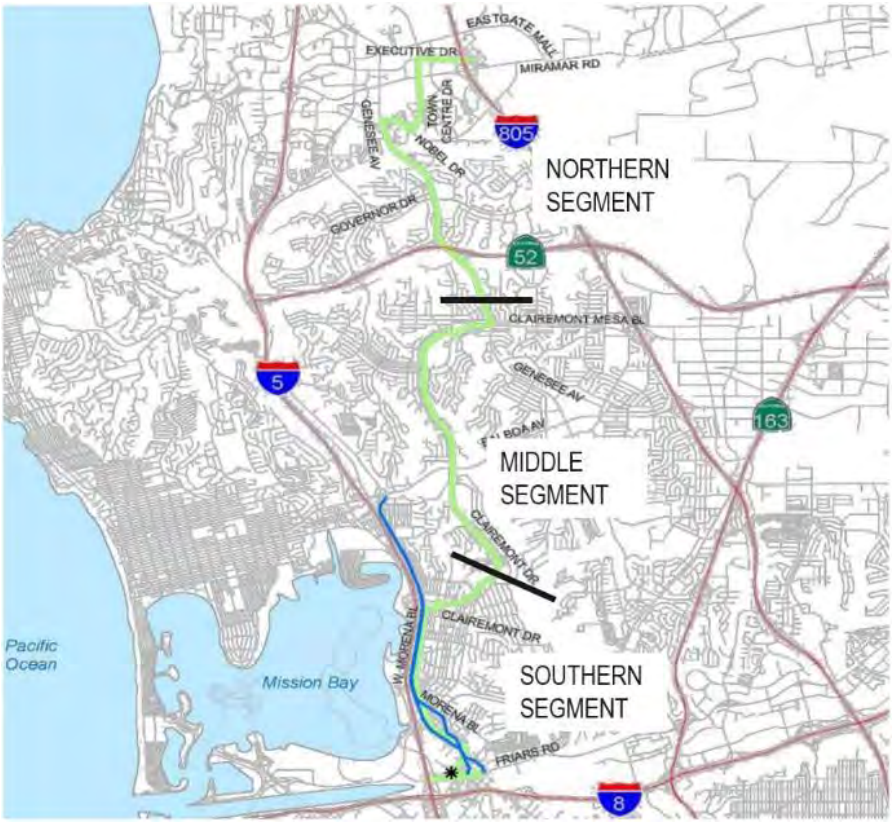

3. Morena PS/PL Construction Package 3: Morena Middle Alignment

- **Associated Pure Water Project:** Morena PS/PL Project
- **Summary:** Two pipelines will start at Iroquois Avenue and will terminate at Genesee Avenue/Highway 52. One pipeline will transport wastewater to the NCWRP, while the other will transport salt and contaminants removed from the water at the NCPWF to the Point Loma Wastewater Treatment Plant.
- **Summary of Major Construction Package Components**
  - 3.6 miles of 48-inch welded steel force main
  - 3.6 miles of 36-inch brine/centrate high density polyethylene pipeline

4. Morena PS/PL Construction Package 4: Morena Southern Alignment

- **Associated Pure Water Project:** Morena PS/PL Project
- **Summary:** Two pipelines will start at Sherman Street, follow West Morena Boulevard and terminate at Iroquois Avenue. One pipeline will transport wastewater to the NCWRP, while the other will transport salt and contaminants removed from the water at the NCPWF to the Point Loma Wastewater Treatment Plant. A 36-inch diameter welded steel water transmission main will be constructed and a 16 inch steel water distribution main will be replaced by 16 inch PVC in this package.
- **Summary of Major Construction Package Components**
  - 3.2 miles of 48-inch force main
  - 3.2 miles of 30-inch brine/centrate pipeline
  - Brine/centrate pressure reducing station
  - 3.2 Miles of existing 16-inch steel water distribution main replacement with PVC
  - 3.3 miles of new 36-inch water transmission main

5. NCWRP Expansion Construction Package 1: NCWRP Flow Equalization Basin

- **Associated Pure Water Project:** NCWRP Expansion
- **Summary:** This package includes the construction of one concrete equalization tank that will balance high/low wastewater flows from primary effluent and will provide for consistent flow to the biological treatment basins.
- **Summary of Major Construction Package Components**
  - 2.35-million-gallon flow equalization basin
  - Grading, yard piping and stormwater basin
  - Electrical and instrumentation

NCWRP Equalization Basin Package 1 Rendering

6. NCWRP Construction Packages 2 and 3: NCWRP Expansion and NCPWF Influent Conveyance

- **Associated Pure Water Project:** NCWRP Expansion
- **Summary:** This package will increase the amount of recycled water that the plant produces to meet the needs of both the non-potable reuse recycled water system and the new NCPWF. Plant expansion includes the construction of a 42.5 mgd pump station that will convey water to the NCPWF across Eastgate Mall Road.
- **Summary of Major Construction Package Components**
  - Plant expansion from 30 mgd to 52 mgd
  - 42-mgd Influent Pump Station and pipeline to the NCPWF
  - New primary clarifies, new bioreactor basins and retrofit of existing basins, secondary clarifiers, new tertiary filter, chemical facilities, and yard piping
  - Equipment and electrical substation replacements
  - Electrical and instrumentation

NCWRP Expansion Rendering

7. NCPWF Construction Package 1: NCPWF and NCPW Pump Station

- **Associated Pure Water Project:** NCWPF
- **Summary:** A new Pure Water Facility will be built on Eastgate Mall across the street from the existing NCWRP to clean the recycled water further and produce 30 mgd of a safe, high-quality drinking water source. A new pump station will be constructed adjacent to the NCPWF on Eastgate Mall Road to pump an annual average of 30 mgd to Miramar Reservoir. The package includes widening a portion of Eastgate Mall Road.
- **Summary of Major Construction Package Components**
  - New 34-mgd Pure Water Facility, including:
    - Ozone Generation and Contactor
    - Biologically Active Carbon (BAC) Filters
    - Membrane Filtration (MF) System
    - Reverse Osmosis (RO)
    - Ultraviolet Disinfection and Advanced Oxidation (UV/AOP)
    - Chemical Feed Systems
    - Operations Building
    - 30-mgd Pump Station (3 + 1 vertical turbine pumps)
    - Electrical and instrumentation

NCPWF and NCPW Pump Station Rendering

8. NCPW PS/PL Construction Package 1: NCPW Pipeline and Dechlorination Facility

- **Associated Pure Water Project:** NCPW PS/PL
- **Summary:** This package includes infrastructure to convey 30 mgd of purified water produced by the NCPWF to Miramar Reservoir. The pipeline will start on Eastgate Mall, follow Miramar Road, continue through Scripps Ranch and end at Miramar Reservoir. The package includes the replacement of 6.4 miles of asbestos cement watermains with PVC.
- **Summary of Major Construction Package Components**
  - 8 Miles of 48-inch welded steel pipe transmission main (purified water pipeline)
  - Dechlorination Facility
  - Standpipe
  - 6.4 miles of watermain replacement of 6, 12 and 16-inch asbestos cement (AC) pipe with 16-inch polyvinylchloride (PVC) pipe.

Pure Water Pipeline Alignment

Dechlorination Facility Rendering

9. NCPW PS/PL Construction Package 2: Subaqueous Pipeline and Miramar Reservoir Pump Station Improvements

- **Associated Pure Water Project:** NCPW PS/PL
- **Summary:** This package includes 0.9 miles of pipeline with duckbill outlets placed at the bottom of Miramar Reservoir together with the rehabilitation of a 100 mgd pump station that delivers raw water from Miramar Reservoir to the Miramar Water Treatment Plant.
- **Summary of Major Construction Package Components**
  - 54-inch to 8-inch Subaqueous pipe
  - 94 Dual duckbill valve outlet ports
  - Miramar Reservoir Pump Station Improvements
  - Electrical and instrumentation

Subaqueous Pipeline Site Plan

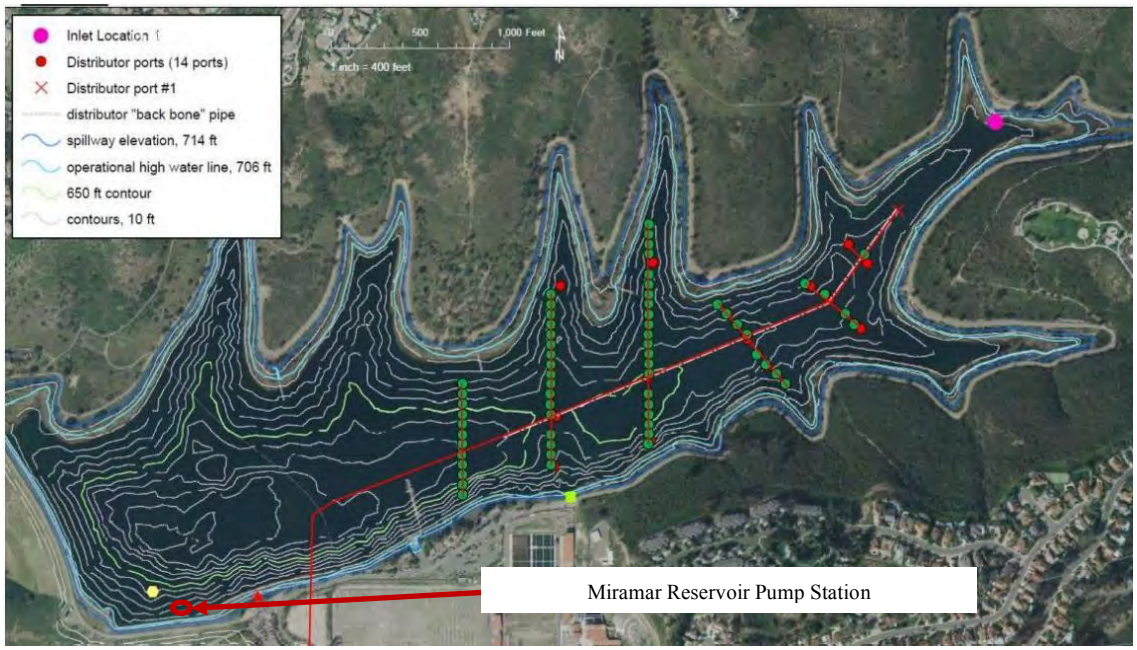

10. MBC Construction Package 1: Metropolitan Biosolids Center Improvements

- **Associated Pure Water Project:** MBC Improvements
- **Summary:** This package will consist of improvements to the existing City biosolids center.
- **Summary of Major Construction Package Components**
  - Thickening centrifuges, sludge feed and polymer pumps, transfer pumps and supply pipeline
  - Digester mixing pump replacements, nozzles, overflow lines, biogas compressors, flare and biogas pipeline
  - Dewatering sludge feed pumps and polymer pumps
  - Centrate Pump Station pump and VFD replacements
  - Electrical and instrumentation

Metropolitan Biosolids Center Improvements Site Plan

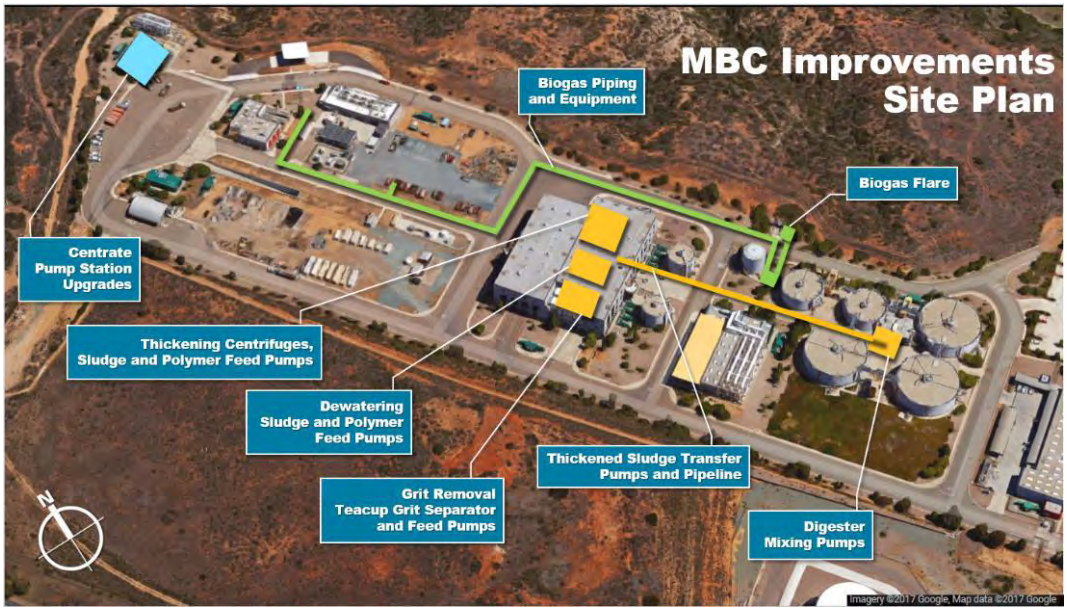

APPENDIX B

MEMORANDUM OF UNDERSTANDING #1

PROJECT LABOR AGREEMENT SECTION 3.1

The City and the Parties agree that Project Work includes all onsite physical craft work that is part of startup and commissioning, including, but not limited to, system flushes and testing, loop checks, rework and modifications, and functional and operational testing up to and including the final running test. It is understood that the City's personnel and/or its representatives, together with the manufacturer's and/or vendor's representatives, and/or plant operating personnel may supervise and direct the startup, commissioning, rework, and modification activity, and that the onsite physical craft work is typically performed as part of a joint effort with these representatives and personnel. A manufacturer or its representatives may perform industry standard startup and commissioning work to satisfy its guarantee or warranty on a piece of equipment, and such work will be exempt from the Project Labor Agreement to the extent the work is excluded by Section 3.2(e) and/or Section 3.2(f).

MEMORANDUM OF UNDERSTANDING #2

NO DISCRIMINATION AND HARASSMENT

The City hereby provides notice that the City and its Contractors must not unlawfully discriminate, harass, or allow harassment against any employee or applicant for employment because of sex, race, color, ancestry, religious creed, national origin, sexual orientation, physical disability (including HIV and AIDS), mental disability, medical condition (cancer), age (over 40), marital status, denial of family care leave, or genetic information, gender, gender identity, gender expression, or military and veteran status. The City and Contractors will ensure that the evaluation and treatment of their employees and applicants for employment are free from such discrimination and harassment. The City and Contractors must comply with the provisions of the Fair Employment and Housing Act and the applicable regulations promulgated thereunder. (Govt. Code §12990, subs. (a)-(f) et seq.; Cal. Code Regs., tit. 2 §7285, et seq.) These terms will be incorporated into every contract and subcontract for the Covered Project.

Dated: ____9-18-20_____

SAN DIEGO BUILDING AND CONSTRUCTION TRADES COUNCIL

By: _____

Tom Lemmon, Business Manager

FIRST AMENDMENT

CITY OF SAN DIEGO PROJECT LABOR AGREEMENT FOR CONSTRUCTION OF PURE WATER PROGRAM PHASE I PROJECTS

This First Amendment is entered into pursuant to Article 20, Section 20.1, of the above-referenced Project Labor Agreement ("PLA"), effective June 16, 2020. The San Diego Building and Construction Trades Council (hereinafter "Council"), the signatory Craft Unions (hereinafter, together with the Council, collectively, the "Union" or "Unions"), and the Contractors performing work on Covered Projects agree to amend Appendix A – San Diego Pure Water Program Phase I Covered Projects to include the following additional Covered Projects:

11. Central Area Small-Scale Facility

- Associated Pure Water Project: Pure Water Phase II
- Summary: In preparation for the design of full-scale facilities, a Central Area Small-Scale Facility (CASSF) consisting of water reclamation processes (secondary/tertiary treatment consisting of biological nutrient removal (BNR) and membrane bioreactors (MBR)) and advanced water purification (AWP) process trains (ozone/BAC, membrane filtration, reverse osmosis, and UV/AOP) will be constructed and used to determine parameters for full scale design and demonstrate compliance with recycled water objectives. The CASSF will be located at Point Loma Wastewater Treatment Plant (PLWTP) with provision for drawing either primary effluent or degritted sewage or a mix of both in any proportion to the CASSF.
- Summary of Major Construction Package Components
    - Influent wastewater pipeline
    - Secondary treatment consisting of biological nutrient removal and membrane bioreactor
    - Ozone treatment
    - Biological activated carbon
    - Membrane filtration
    - Reverse osmosis
    - Ultraviolet/advanced oxidation process
    - Instrumentation and controls

12. Pure Water Genesee Avenue Median Improvements

- Associated Pure Water Project: Morena PS/PL Project
- Summary: Medians will be constructed along Genesee Ave between Nobel Dr and SR-52 and along Governor Dr between Genesee Ave and Radcliffe Dr.

- Summary of Major Construction Package Components
  - Removal of existing AC
  - Install medians with a sinuous pattern of cobble, flat concrete, and shrubs/groundcover
  - Temporary irrigation

13. Penasquitos Pump Station Oxygenation System

- Associated Pure Water Project: NCPWF
- Summary: Septic water from the Penasquitos Pump Station has been linked to the poor performance of the processes at the NCWRP. The addition of high-purity oxygen can effectively prevent septicity by increasing the dissolved oxygen concentration in the wastewater and maintaining an aerobic environment during conveyance of wastewater from the PQPS to the NCWRP
- Summary of Major Construction Package Components:
  - High purity oxygenation system
  - Communication system

The Unions and Contractors agree this First Amendment to the PLA represents the entire understanding of the parties and affects only Appendix A. All other terms and conditions of the PLA remain in full force and effect.

Dated: _____

SAN DIEGO BUILDING AND CONSTRUCTION TRADES COUNCIL

By: DocuSigned by: Carol Kim
Carol Kim, Business Manager

SIGNATORY UNIONS

By: DocuSigned by: Michael Patterson
Allied Workers Local 5

By: DocuSigned by: Luis Miramontes
Boilermakers Local 92

By: DocuSigned by: Chris Brisson
Bricklayers & Allied Crafts Local 4

By: DocuSigned by: Jack Alvarado
Cement Masons Local 500 / Area 744

By: DocuSigned by:
Electrical Workers Local 569

By: DocuSigned by: Tony Gazzaniga
Elevator Constructors Local 18

By: DocuSigned by: Ernesto Toscano
Glaziers, Floor Coverings & Painters Local 1399

By: DocuSigned by: Brian Coleman
Iron Workers Local 229

By: DocuSigned by: Val Macedo
Laborers Local 89

By: DocuSigned by: Tom Castleman
Plasters Local 200

By: DocuSigned by: Vince Uribe
Plasterers Local 1414

By:
Operating Engineers Local 12

By:
Operating Engineers Local 12

By:
Operating Engineers Local 12

By: DocuSigned by: Steve Beringer
Plumbers & Pipefitters Local 230

By: DocuSigned by: Todd Barry
Roadsprinkler Fitters Local 669

By: DocuSigned by: Paul Colmenero
Roofers & Waterproofers Local 45

By: DocuSigned by: Dave Gauthier
Sheet Metal Workers Local 206

By: DocuSigned by:
Laborers Local 1184

By:
Sheet Metal Workers Local 206

By: DocuSigned by: Ed Learn
Laborers Local 345

By: DocuSigned by: Jose Estrada
Teamsters Local 166

By: DocuSigned by: Ricardo Perez
UA Local 345

By: DocuSigned by: Ernesto Toscano
Tradeshow & Sign Craft Local 831

By:
Southwest Regional Council of Carpenters

By: DocuSigned by: SERGIO RUSCON
Laborers Local 300

By: _____
Laborers Local 89

By: _____
Plaster Tenders Local 1414

By: _____
Operating Engineers Local 12

By: _____
Plumbers & Pipefitters Local 230

By: _____
Roofers & Waterproofers Local 45

By: _____
Laborers Local 1184

By: _____
Laborers Local 345

By: _____
UA Local 345

By: _____
Southwest Regional Council of Carpenters

By: DocuSigned by: Jon Preciado
Southern California District Council of Laborers

By: _____
Plasters Local 200

By: _____
Operating Engineers Local 12

By: _____
Operating Engineers Local 12

By: _____
Road Sprinkler Fitters Local 669

By: _____
Sheet Metal Workers Local 206

By: _____
Sheet Metal Workers Local 206

By: _____
Teamsters Local 166

By: _____
Tradeshow & Sign Craft Local 831

By: _____
Laborers Local 300

By: _____
Laborers Local 89

By: _____
Plasters Local 200

By: _____
Plaster Tenders Local 1414

By: _____
Operating Engineers Local 12

By: _____
Operating Engineers Local 12

By: _____
Operating Engineers Local 12

By: _____
Plumbers & Pipefitters Local 230

By: _____
Road Sprinkler Fitters Local 669

By: _____
Roofers & Waterproofers Local 45

By: _____
Sheet Metal Workers Local 206

By: _____
Laborers Local 1184

By: _____
Sheet Metal Workers Local 206

By: _____
Laborers Local 345

By: _____
Teamsters Local 166

By: _____
UA Local 345

By: _____
Tradeshow & Sign Craft Local 831

By: _____
Southwest Regional Council of Carpenters

By: _____
Laborers Local 300

ATTACHMENT G

CONTRACT AGREEMENT

ATTACHMENT G

CONTRACT AGREEMENT

CONSTRUCTION CONTRACT

This contract is made and entered into between THE CITY OF SAN DIEGO, a municipal corporation, herein called "City", and **J.R. Filanc Construction Co., Inc.**, herein called "Contractor" for construction of **Pure Water Program (PWP) Central Area Small-Scale Facility**; Bid No. **K-23-2119-DBB-3-C;** in the total amount of **THIRTY EIGHT MILLION FOUR HUNDRED THIRTY ONE THOUSAND THREE HUNDRED THIRTY ONE DOLLARS ($38,431,331)**, which is comprised of the Base Bid, consisting of an amount not to exceed **$38,431,331**.

IN CONSIDERATION of the payments to be made hereunder and the mutual undertakings of the parties hereto, City and Contractor agree as follows:

1. The following are incorporated into this contract as though fully set forth herein:

   (a) The attached Faithful Performance and Payment Bonds.

   (b) The attached Proposal included in the Bid documents by the Contractor.

   (c) Reference Standards listed in the Instruction to Bidders and the Supplementary Special Provisions (SSP).

   (d) That certain documents entitled **Pure Water Program (PWP) Central Area Small-Scale Facility**, on file in the office of the City Clerks as Document No. **B-21151**, as well as all matters referenced therein.

2. The Contractor shall perform and be bound by all the terms and conditions of this contract and in strict conformity therewith shall perform and complete in a good and workmanlike manner **Pure Water Program (PWP) Central Area Small-Scale Facility**, Bid Number **K-23-2119-DBB-3-C**, San Diego, California.

3. For such performances, the City shall pay to Contractor the amounts set forth at the times and in the manner and with such additions or deductions as are provided for in this contract, and the Contractor shall accept such payment in full satisfaction of all claims incident to such performances.

4. No claim or suit whatsoever shall be made or brought by Contractor against any officer, agent, or employee of the City for or on account of anything done or omitted to be done in connection with this contract, nor shall any such officer, agent, or employee be liable hereunder.

5. This contract is effective as of the date that the Mayor or designee signs the agreement and is approved by the City Attorney in accordance with San Diego Charter Section 40.

CONTRACT AGREEMENT (continued)

IN WITNESS WHEREOF, this Agreement is signed by the City of San Diego, acting by and through its Mayor or designee, pursuant to Resolution No. 313764, authorizing such execution.

THE CITY OF SAN DIEGO

By _____

Print Name: Alia Khouri
Deputy Chief Operating Officer
Purchasing & Contracting Dept.

Date: 6/27/2023

APPROVED AS TO FORM

Mara W. Elliott, City Attorney

By _____

Print Name: Elizabeth Cason

Deputy City Attorney

Date: June 28, 2023

CONTRACTOR
J.R. Filanc Construction Company, Inc.

By _____

Print Name: Omar Rodea

Title: President

Date: Feb. 14, 2023

City of San Diego License No.: B1994000641

State Contractor's License No.: 134877

DEPARTMENT OF INDUSTRIAL RELATIONS (DIR) REGISTRATION NUMBER: 1000001631

CERTIFICATIONS AND FORMS

The Bidder, by submitting its electronic bid, agrees to and certifies under penalty of perjury under the laws of the State of California, that the certifications, forms and affidavits submitted as part of this bid are true and correct.

BIDDER'S GENERAL INFORMATION

To the City of San Diego:

Pursuant to "Notice Inviting Bids", specifications, and requirements on file with the City Clerk, and subject to all provisions of the Charter and Ordinances of the City of San Diego and applicable laws and regulations of the United States and the State of California, the undersigned hereby proposes to furnish to the City of San Diego, complete at the prices stated herein, the items or services hereinafter mentioned. The undersigned further warrants that this bid is not made in the interest of, or on behalf of, any undisclosed person, partnership, company, association, organization, or corporation; that the bid is genuine and not collusive or sham; that the bidder has not directly or indirectly induced or solicited any other bidder to put in a false or sham bid, and has not directly or indirectly colluded, conspired, connived, or agreed with any bidder or anyone else to put in a sham bid, or that anyone shall refrain from bidding; that the bidder has not in any manner, directly or indirectly, sought by agreement, communication, or conference with anyone to fix the bid price of the bidder or any other bidder, or to fix any overhead, profit, or cost element of the bid price, or of that of any other bidder, or to secure any advantage against the public body awarding the contract of anyone interested in the proposed contract; that all statements contained in the bid are true; and, further, that the bidder has not, directly or indirectly, submitted his or her bid price or any breakdown thereof, or the contents thereof, or divulged information or data relative thereto, or paid, and will not pay, any fee to any corporation, partnership, company, association, organization, bid depository, or to any member or agent thereof to effectuate a collusive or sham bid.

The undersigned bidder(s) further warrants that bidder(s) has thoroughly examined and understands the entire Contract Documents (plans and specifications) and the Bidding Documents therefore, and that by submitting said Bidding Documents as its bid proposal, bidder(s) acknowledges and is bound by the entire Contract Documents, including any addenda issued thereto, as such Contract Documents incorporated by reference in the Bidding Documents.

NON-COLLUSION AFFIDAVIT TO BE EXECUTED BY BIDDER AND SUBMITTED WITH BID UNDER 23 UNITED STATES CODE 112 AND PUBLIC CONTRACT CODE 7106

State of California

County of San Diego

The bidder, being first duly sworn, deposes and says that he or she is authorized by the party making the foregoing bid that the bid is not made in the interest of, or on behalf of, any undisclosed person, partnership, company, association, organization, or corporation; that the bid is genuine and not collusive or sham; that the bidder has not directly or indirectly induced or solicited any other bidder to put in a false or sham bid, and has not directly or indirectly colluded, conspired, connived, or agreed with any bidder or anyone else to put in a sham bid, or that anyone shall refrain from bidding; that the bidder has not in any manner, directly or indirectly, sought by agreement, communication, or conference with anyone to fix the bid price of the bidder or any other bidder, or to fix any overhead, profit, or cost element of the bid price, or of that of any other bidder, or to secure any advantage against the public body awarding the contract of anyone interested in the proposed contract; that all statements contained in the bid are true; and further, that the bidder has not, directly or indirectly, submitted his or her bid price or any breakdown thereof, or the contents thereof, or divulged information or data relative thereto, or paid, and will not pay, any fee to any corporation, partnership, company association, organization, bid depository, or to any member or agent thereof to effectuate a collusive or sham bid.

CONTRACTOR CERTIFICATION

COVID-19 VACCINATION ORDINANCE

CERTIFICATION OF COMPLIANCE

I hereby certify that I am familiar with the requirements of San Diego Ordinance No. O-21398 implementing the City's Mandatory COVID-19 Vaccination Policy.

TERMS OF COMPLIANCE

The City's Mandatory COVID-19 Vaccination Policy, outlined in San Diego Ordinance O-21398 (Nov. 29, 2021), requires ALL City contractors, who interact in close contact with City employees while providing contracted services indoors in City facilities or while performing bargaining unit work while indoors, to be fully vaccinated against COVID-19, effective January 3, 2022, as a condition for provision or continued provision of contracted services.

1. "City contractor" means a person who has contracted with the City of San Diego to provide public works, goods, services, franchise, or consultant services for or on behalf of the City, and includes a subcontractor, vendor, franchisee, consultant, or any of their respective officers, directors, shareholders, partners, managers, employees, or other individuals associated with the contractor, subcontractor, consultant, or vendor. "Person" means any natural person, firm, joint venture, joint stock company, partnership, association, club, company, corporation business trust or organization.
2. "Fully vaccinated" means a person has received, at least 14 days prior, either the second dose in a two-dose COVID-19 vaccine series or a single-dose COVID-19 vaccine, or otherwise meets the criteria for full vaccination against COVID-19 as stated in applicable public health guidance, orders, or law. Acceptable COVID-19 vaccines must be approved by the U.S. Food and Drug Administration (FDA) or authorized for emergency use by the FDA or the World Health Organization.
3. "Close contact" means a City contractor is **within 6 feet** of a City employee for a **cumulative total of 15 minutes or more over a 24-hour period** (for example, three individual 5-minute exposures for a total of 15 minutes).
4. City contractors who interact in close contact with City employees must fully comply with the City's Mandatory COVID-19 Vaccination Policy,which may include a reporting program that tracks employee vaccination status.
5. City contractors with employees or subcontractors who interact in close contact with City employees must certify that those members of their workforce, and subcontractors regardless of tier, who work indoors at a City facility, are fully vaccinated and that the City contractor has a program to track employee compliance.
6. City contractors that have an Occupational Safety and Health Administration compliant testing program for members of their workforce, as a reasonable accommodation, may be considered for compliance.

Non-compliance with the City's Mandatory COVID-19 Vaccination Policy may result in termination of a contract for cause, pursuant to the City's General Terms and Provisions, Reference Standards, and the San Diego Municipal Code.

CONTRACTOR CERTIFICATION

DRUG-FREE WORKPLACE

I hereby certify that I am familiar with the requirements of San Diego City Council Policy No. 100-17 regarding Drug-Free Workplace as outlined in the WHITEBOOK, Section 5-1.3, "Drug-Free Workplace", of the project specifications, and that;

This company has in place a drug-free workplace program that complies with said policy. I further certify that each subcontract agreement for this project contains language which indicates the subcontractor's agreement to abide by the provisions of subdivisions a) through c) of the policy as outlined.

CONTRACTOR CERTIFICATION

AMERICANS WITH DISABILITIES ACT (ADA) COMPLIANCE CERTIFICATION

I hereby certify that I am familiar with the requirements of San Diego City Council Policy No. 100-4 regarding the Americans With Disabilities Act (ADA) outlined in the WHITEBOOK, Section 5-1.2, "California Building Code, California Code of Regulations Title 24 and Americans with Disabilities Act". of the project specifications, and that:

This company has in place workplace program that complies with said policy. I further certify that each subcontract agreement for this project contains language which indicates the subcontractor's agreement to abide by the provisions of the policy as outlined.

CONTRACTOR CERTIFICATION

CONTRACTOR STANDARDS – PLEDGE OF COMPLIANCE

I declare under penalty of perjury that I am authorized to make this certification on behalf of the company submitting this bid/proposal, that as Contractor, I am familiar with the requirements of City of San Diego Municipal Code § 22.3004 regarding Contractor Standards as outlined in the WHITEBOOK, Section 5-1.4, ("Contractor Standards and Pledge of Compliance"), of the project specifications, and that Contractor has complied with those requirements.

I further certify that each of the Contractor's subcontractors has completed a Pledge of Compliance attesting under penalty of perjury of having complied with City of San Diego Municipal Code § 22.3004.

CONTRACTOR CERTIFICATION

EQUAL BENEFITS ORDINANCE CERTIFICATION

I declare under penalty of perjury that I am familiar with the requirements of and in compliance with the City of San Diego Municipal Code § 22.4300 regarding Equal Benefits Ordinance.

CONTRACTOR CERTIFICATION

EQUAL PAY ORDINANCE CERTIFICATION

Contractor shall comply with the Equal Pay Ordinance (EPO) codified in the San Diego Municipal Code (SDMC) at section 22.4801 through 22.4809, unless compliance is not required based on an exception listed in SDMC section 22.4804.

Contractor shall require all of its subcontractors to certify compliance with the EPO in their written subcontracts.

Contractor must post a notice informing its employees of their rights under the EPO in the workplace or job site.

By signing this Contract with the City of San Diego, Contractor acknowledges the EPO requirements and pledges ongoing compliance with the requirements of SDMC Division 48, section 22.4801 et seq., throughout the duration of this Contract.

CONTRACTOR CERTIFICATION

PRODUCT ENDORSEMENT

I declare under penalty of perjury that I acknowledge and agree to comply with the provisions of City of San Diego Administrative Regulation 95.65, concerning product endorsement. Any advertisement identifying or referring to the City as the user of a product or service requires the prior written approval of the City.

AFFIDAVIT OF DISPOSAL

(To be submitted upon completion of Construction pursuant to the contracts Certificate of Completion)

WHEREAS, on the _____ DAY OF _____, 2_____ the undersigned entered into and executed a contract with the City of San Diego, a municipal corporation, for:

Pure Water Program (PWP) Central Area Small-Scale Facility
(Project Title)

as particularly described in said contract and identified as Bid No. **K-23-2119-DBB-3-C**; SAP No. (WBS) **B-21151**; and **WHEREAS**, the specification of said contract requires the Contractor to affirm that "all brush, trash, debris, and surplus materials resulting from this project have been disposed of in a legal manner"; and **WHEREAS**, said contract has been completed and all surplus materials disposed of:

_____

_____

NOW, THEREFORE, in consideration of the final payment by the City of San Diego to said Contractor under the terms of said contract, the undersigned Contractor, does hereby affirm that all surplus materials as described in said contract have been disposed of at the following location(s)

_____

_____

and that they have been disposed of according to all applicable laws and regulations.

Dated this _____ DAY OF _____, _____.

By:_____
Contractor

ATTEST:

State of _____ County of _____

On this_____ DAY OF _____, 2_____, before the undersigned, a Notary Public in and for said County and State, duly commissioned and sworn, personally appeared_____ known to me to be the _____ Contractor named in the foregoing Release, and whose name is subscribed thereto, and acknowledged to me that said Contractor executed the said Release.

Notary Public in and for said County and State

LIST OF SUBCONTRACTORS

***** PROVIDED FOR ILLUSTRATIVE PURPOSES ONLY *** TO BE SUBMITTED IN ELECTRONIC FORMAT ONLY*** SEE INSTRUCTIONS TO BIDDERS, FOR FURTHER INFORMATION**

In accordance with the requirements of the "Subletting and Subcontracting Fair Practices Act", Section 4100, of the California Public Contract Code (PCC), the Bidder is to list below the name, address and license number of each Subcontractor who will perform work, labor, render services or specially fabricate and install a portion [type] of the work or improvement, in an amount of or in excess of 0.5% of the Contractor's total Bid. Failure to comply with this requirement may result in the Bid being rejected as non-responsive. The Contractor is to list only one Subcontractor for each portion of the Work. The Bidder's attention is directed to the Special Provisions – General; Paragraph 2-3 Subcontracts, which stipulates the percentage of the Work to be performed with the Bidder's own forces. The Bidder is to also list all SLBE, ELBE, DBE, DVBE, MBE, WBE, OBE, SDB, WoSB, HUBZone, and SDVOSB Subcontractors for which the Bidders are seeking recognition towards achieving any mandatory, voluntary, or both subcontracting participation percentages.

NAME, ADDRESS AND TELEPHONE NUMBER OF SUBCONTRACTOR	CONSTRUCTOR OR DESIGNER	SUBCONTRACTOR LICENSE NUMBER	TYPE OF WORK	DOLLAR VALUE OF SUBCONTRACT	MBE, WBE, DBE, DVBE, OBE, ELBE, SLBE, SDB, WoSB, HUBZone, OR SDVOSB①	WHERE CERTIFIED②	CHECK IF JOINT VENTURE PARTNERSHIP
Name:_____ Address:_____ City:_____ State:_____ Zip:_____ Phone:_____ Email:_____							
Name:_____ Address:_____ City:_____ State:_____ Zip:_____ Phone:_____ Email:_____							

① As appropriate, Bidder shall identify Subcontractor as one of the following and shall include a valid proof of certification (except for OBE, SLBE and ELBE):

Certified Minority Business Enterprise	MBE	Certified Woman Business Enterprise	WBE
Certified Disadvantaged Business Enterprise	DBE	Certified Disabled Veteran Business Enterprise	DVBE
Other Business Enterprise	OBE	Certified Emerging Local Business Enterprise	ELBE
Certified Small Local Business Enterprise	SLBE	Small Disadvantaged Business	SDB
Woman-Owned Small Business	WoSB	HUBZone Business	HUBZone
Service-Disabled Veteran Owned Small Business	SDVOSB		

② As appropriate, Bidder shall indicate if Subcontractor is certified by:

City of San Diego	CITY	State of California Department of Transportation	CALTRANS
California Public Utilities Commission	CPUC		
State of California's Department of General Services	CADoGS	City of Los Angeles	LA
State of California	CA	U.S. Small Business Administration	SBA

The Bidder will not receive any subcontracting participation percentages if the Bidder fails to submit the required proof of certification.

NAMED EQUIPMENT/MATERIAL SUPPLIER LIST

***** PROVIDED FOR ILLUSTRATIVE PURPOSES ONLY *** TO BE SUBMITTED IN ELECTRONIC FORMAT ONLY *** SEE INSTRUCTIONS TO BIDDERS FOR FURTHER INFORMATION**

NAME, ADDRESS AND TELEPHONE NUMBER OF VENDOR/SUPPLIER	MATERIALS OR SUPPLIES	DOLLAR VALUE OF MATERIAL OR SUPPLIES	SUPPLIER (Yes/No)	MANUFACTURER (Yes/No)	MBE, WBE, DBE, DVBE, OBE, ELBE, SLBE, SDB, WoSB, HUBZone, OR SDVOSB①	WHERE CERTIFIED②
Name:_____ Address:_____ City:_____ State:_____ Zip:_____ Phone:_____ Email:_____						
Name:_____ Address:_____ City:_____ State:_____ Zip:_____ Phone:_____ Email:_____						

① As appropriate, Bidder shall identify Vendor/Supplier as one of the following and shall include a valid proof of certification (except for OBE, SLBE and ELBE):

Certified Minority Business Enterprise	MBE	Certified Woman Business Enterprise	WBE
Certified Disadvantaged Business Enterprise	DBE	Certified Disabled Veteran Business Enterprise	DVBE
Other Business Enterprise	OBE	Certified Emerging Local Business Enterprise	ELBE
Certified Small Local Business Enterprise	SLBE	Small Disadvantaged Business	SDB
Woman-Owned Small Business	WoSB	HUBZone Business	HUBZone
Service-Disabled Veteran Owned Small Business	SDVOSB		

② As appropriate, Bidder shall indicate if Vendor/Supplier is certified by:

City of San Diego	CITY	State of California Department of Transportation	CALTRANS
California Public Utilities Commission	CPUC		
State of California's Department of General Services	CADoGS	City of Los Angeles	LA
State of California	CA	U.S. Small Business Administration	SBA

The Bidder will not receive any subcontracting participation percentages if the Bidder fails to submit the required proof of certification.

ELECTRONICALLY SUBMITTED FORMS

FAILURE TO FULLY COMPLETE AND SUBMIT ANY OF THE FOLLOWING FORMS WILL DEEM YOUR BID NON-RESPONSIVE.

PLANETBIDS WILL NOT ALLOW FOR BID SUBMISSIONS WITHOUT THE ATTACHMENT OF THESE FORMS

The following forms are to be completed by the bidder and submitted (uploaded) electronically with the bid in PlanetBids.

A. **BID BOND – See Instructions to Bidders, Bidders Guarantee of Good Faith (Bid Security) for further instructions**

B. **CONTRACTOR'S CERTIFICATION OF PENDING ACTIONS**

C. **MANDATORY DISCLOSURE OF BUSINESS INTERESTS FORM**

D. **DEBARMENT AND SUSPENSION CERTIFICATION FOR PRIME CONTRACTOR**

E. **DEBARMENT AND SUSPENSION CERTIFICATION FOR SUBCONTRACTORS, SUPPLIERS AND MANUFACTURERS**

BID BOND

See Instructions to Bidders, Bidder Guarantee of Good Faith
(Bid Security)

KNOW ALL MEN BY THESE PRESENTS,

That J.R. Filanc Construction Company, Inc. as Principal, and Travelers Casualty and Surety Company of America as Surety, are held and firmly bound unto The City of San Diego hereinafter called "OWNER," in the sum of **10% OF THE TOTAL BID AMOUNT** for the payment of which sum, well and truly to be made, we bind ourselves, our heirs, executors, administrators, successors, and assigns, jointly and severally, firmly by these presents.

WHEREAS, said Principal has submitted a Bid to said OWNER to perform the WORK required under the bidding schedule(s) of the OWNER's Contract Documents entitled

Bid No.: K-23-2119-DBB-3-C - Pure Water Program (PWP) Central Area Small-Scale Facility

NOW THEREFORE, if said Principal is awarded a contract by said OWNER and, within the time and in the manner required in the "Notice Inviting Bids" enters into a written Agreement on the form of agreement bound with said Contract Documents, furnishes the required certificates of insurance, and furnishes the required Performance Bond and Payment Bond, then this obligation shall be null and void, otherwise it shall remain in full force and effect. In the event suit is brought upon this bond by said OWNER and OWNER prevails, said Surety shall pay all costs incurred by said OWNER in such suit, including a reasonable attorney's fee to be fixed by the court.

SIGNED AND SEALED, this 6th day of January, 2023

J.R. Filanc Construction Company, Inc. (SEAL)
(Principal)

By: _____
(Signature)
Robert Zaiser, Vice President

Travelers Casualty and Surety Company of America (SEAL)
(Surety)

By: _____
(Signature)
Lawrence F. McMahon, Attorney-in-Fact

(SEAL AND NOTARIAL ACKNOWLEDGEMENT OF SURETY)

ACKNOWLEDGMENT

A notary public or other officer completing this certificate verifies only the identity of the individual who signed the document to which this certificate is attached, and not the truthfulness, accuracy, or validity of that document.

State of California
County of San Diego)

On January 6, 2023 before me, Minna Huovila, Notary Public
(insert name and title of the officer)

personally appeared Lawrence F. McMahon,
who proved to me on the basis of satisfactory evidence to be the person(s) whose name(s) is/are subscribed to the within instrument and acknowledged to me that he/she/they executed the same in his/her/their authorized capacity(ies), and that by his/her/their signature(s) on the instrument the person(s), or the entity upon behalf of which the person(s) acted, executed the instrument.

I certify under PENALTY OF PERJURY under the laws of the State of California that the foregoing paragraph is true and correct.

WITNESS my hand and official seal.

Signature _____ **(Seal)**

CSC1 MINNA HUOVILA
COMM. #2313883
NOTARY PUBLIC-CALIFORNIA
SAN DIEGO COUNTY
My Commission Expires
DECEMBER 6, 2023 CSC1

TRAVELERS	Travelers Casualty and Surety Company of America Travelers Casualty and Surety Company St. Paul Fire and Marine Insurance Company

POWER OF ATTORNEY

KNOW ALL MEN BY THESE PRESENTS: That Travelers Casualty and Surety Company of America, Travelers Casualty and Surety Company, and St. Paul Fire and Marine Insurance Company are corporations duly organized under the laws of the State of Connecticut (herein collectively called the "Companies"), and that the Companies do hereby make, constitute and appoint **LAWRENCE F MCMAHON** of **SAN DIEGO**, **California**, their true and lawful Attorney(s)-in-Fact to sign, execute, seal and acknowledge any and all bonds, recognizances, conditional undertakings and other writings obligatory in the nature thereof on behalf of the Companies in their business of guaranteeing the fidelity of persons, guaranteeing the performance of contracts and executing or guaranteeing bonds and undertakings required or permitted in any actions or proceedings allowed by law.

IN WITNESS WHEREOF, the Companies have caused this instrument to be signed, and their corporate seals to be hereto affixed, this **21st** day of **April, 2021.**

HARTFORD, CONN. — HARTFORD, CONN. — CORPORATE SEAL

State of Connecticut

By: _____
Robert L. Raney, Senior Vice President

City of Hartford ss.

On this the **21st** day of **April, 2021**, before me personally appeared **Robert L. Raney**, who acknowledged himself to be the Senior Vice President of each of the Companies, and that he, as such, being authorized so to do, executed the foregoing instrument for the purposes therein contained by signing on behalf of said Companies by himself as a duly authorized officer.

IN WITNESS WHEREOF, I hereunto set my hand and official seal.

My Commission expires the **30th** day of **June, 2026**

ANNA P. NOWIK — NOTARY PUBLIC — CONNECTICUT

_____
Anna P. Nowik, Notary Public

This Power of Attorney is granted under and by the authority of the following resolutions adopted by the Boards of Directors of each of the Companies, which resolutions are now in full force and effect, reading as follows:

RESOLVED, that the Chairman, the President, any Vice Chairman, any Executive Vice President, any Senior Vice President, any Vice President, any Second Vice President, the Treasurer, any Assistant Treasurer, the Corporate Secretary or any Assistant Secretary may appoint Attorneys-in-Fact and Agents to act for and on behalf of the Company and may give such appointee such authority as his or her certificate of authority may prescribe to sign with the Company's name and seal with the Company's seal bonds, recognizances, contracts of indemnity, and other writings obligatory in the nature of a bond, recognizance, or conditional undertaking, and any of said officers or the Board of Directors at any time may remove any such appointee and revoke the power given him or her; and it is

FURTHER RESOLVED, that the Chairman, the President, any Vice Chairman, any Executive Vice President, any Senior Vice President or any Vice President may delegate all or any part of the foregoing authority to one or more officers or employees of this Company, provided that each such delegation is in writing and a copy thereof is filed in the office of the Secretary; and it is

FURTHER RESOLVED, that any bond, recognizance, contract of indemnity, or writing obligatory in the nature of a bond, recognizance, or conditional undertaking shall be valid and binding upon the Company when (a) signed by the President, any Vice Chairman, any Executive Vice President, any Senior Vice President or any Vice President, any Second Vice President, the Treasurer, any Assistant Treasurer, the Corporate Secretary or any Assistant Secretary and duly attested and sealed with the Company's seal by a Secretary or Assistant Secretary; or (b) duly executed (under seal, if required) by one or more Attorneys-in-Fact and Agents pursuant to the power prescribed in his or her certificate or their certificates of authority or by one or more Company officers pursuant to a written delegation of authority; and it is

FURTHER RESOLVED, that the signature of each of the following officers: President, any Executive Vice President, any Senior Vice President, any Vice President, any Assistant Vice President, any Secretary, any Assistant Secretary, and the seal of the Company may be affixed by facsimile to any Power of Attorney or to any certificate relating thereto appointing Resident Vice Presidents, Resident Assistant Secretaries or Attorneys-in-Fact for purposes only of executing and attesting bonds and undertakings and other writings obligatory in the nature thereof, and any such Power of Attorney or certificate bearing such facsimile signature or facsimile seal shall be valid and binding upon the Company and any such power so executed and certified by such facsimile signature and facsimile seal shall be valid and binding on the Company in the future with respect to any bond or understanding to which it is attached.

I, **Kevin E. Hughes**, the undersigned, Assistant Secretary of each of the Companies, do hereby certify that the above and foregoing is a true and correct copy of the Power of Attorney executed by said Companies, which remains in full force and effect.

Dated this 6th day of January, 2023.

HARTFORD, CONN. — HARTFORD, CONN. — CORPORATE SEAL

_____
Kevin E. Hughes, Assistant Secretary

To verify the authenticity of this Power of Attorney, please call us at 1-800-421-3880.
Please refer to the above-named Attorney(s)-in-Fact and the details of the bond to which this Power of Attorney is attached.

CONTRACTOR'S CERTIFICATION OF PENDING ACTIONS

As part of its bid or proposal (Non-Price Proposal in the case of Design-Build contracts), the Bidder shall provide to the City a list of all instances within the past 10 years where a complaint was filed or pending against the Bidder in a legal or administrative proceeding alleging that Bidder discriminated against its employees, subcontractors, vendors or suppliers, and a description of the status or resolution of that complaint, including any remedial action taken.

CHECK ONE BOX ONLY.

☒ The undersigned certifies that within the past 10 years the Bidder has NOT been the subject of a complaint or pending action in a legal administrative proceeding alleging that Bidder discriminated against its employees, subcontractors, vendors or suppliers.

☐ The undersigned certifies that within the past 10 years the Bidder has been the subject of a complaint or pending action in a legal administrative proceeding alleging that Bidder discriminated against its employees, subcontractors, vendors or suppliers. A description of the status or resolution of that complaint, including any remedial action taken and the applicable dates is as follows:

DATE OF CLAIM	LOCATION	DESCRIPTION OF CLAIM	LITIGATION (Y/N)	STATUS	RESOLUTION/REMEDIAL ACTION TAKEN

Contractor Name: J.R. Filanc Construction Company, Inc.

Certified By Omar Rodea Title President

Name

Signature Date January 5, 2023

USE ADDITIONAL FORMS AS NECESSARY

Mandatory Disclosure of Business Interests Form

BIDDER/PROPOSER INFORMATION

Legal Name		DBA	
J.R. Filanc Construction Company, Inc.		N/A	
Street Address	**City**	**State**	**Zip**
740 N. Andreasen Drive	Escondido	CA	92029
Contact Person, Title		**Phone**	**Fax**
Omar Rodea, President		760-941-7130	760-941-3969

Provide the name, identity, and precise nature of the interest* of all persons who are directly or indirectly involved** in this proposed transaction (SDMC § 21.0103).

* The precise nature of the interest includes:

- the percentage ownership interest in a party to the transaction,
- the percentage ownership interest in any firm, corporation, or partnership that will receive funds from the
- transaction, the value of any financial interest in the transaction,
- any contingent interest in the transaction and the value of such interest should the contingency be satisfied, and any
- philanthropic, scientific, artistic, or property interest in the transaction.

** Directly or indirectly involved means pursuing the transaction by:

- communicating or negotiating with City officers or employees,
- submitting or preparing applications, bids, proposals or other documents for purposes of contracting with the City,
- or directing or supervising the actions of persons engaged in the above activity.

Name	Title/Position
Please see Attachment A	
City and State of Residence	**Employer (if different than Bidder/Proposer)**
Interest in the transaction	

Name	Title/Position
City and State of Residence	**Employer (if different than Bidder/Proposer)**
Interest in the transaction	

* Use Additional Pages if Necessary *

Under penalty of perjury under the laws of the State of California, I certify that I am responsible for the completeness and accuracy of the responses contained herein, and that all information provided is true, full and complete to the best of my knowledge and belief. I agree to provide written notice to the Mayor or Designee within five (5) business days if, at any time, I learn that any portion of this Mandatory Disclosure of Business Interests Form requires an updated response. Failure to timely provide the Mayor or Designee with written notice is grounds for Contract termination.

Omar Rodea, President		January 5, 2023
Print Name, Title	Signature	Date

Failure to sign and submit this form with the bid/proposal shall make the bid/proposal non-responsive. In the case of an informal solicitation, the contract will not be awarded unless a signed and completed Mandatory Disclosure of Business Interests Form is submitted.

Attachment A

Name(s) of Member of Firm or Office of Corporation authorized to enter into a binding Contract	City and State of Residence	Employer (if different than Bidder/Proposer)	Interest in Transaction
Mark E. Filanc - Chief Executive Officer	Del Mar, CA	n/a	91.0749%
Omar Rodea - President	Carlsbad, CA	n/a	0.4224%
Vincent L. Diaz - Vice President	Fallbrook, CA	n/a	1.6915%
Norbert J. Schulz - Vice President	Del Mar, CA	n/a	0.5280%
Robert W. Zaiser - Vice President	Cardiff, CA	n/a	1.7600%
David J. Kiess - Assistant Secretary and Vice President	Carlsbad, CA	n/a	1.9872%

DEBARMENT AND SUSPENSION CERTIFICATION

PRIME CONTRACTOR

FAILURE TO COMPLETE AND SUBMIT AT TIME OF BID SHALL RENDER BID NON-RESPONSIVE

EFFECT OF DEBARMENT OR SUSPENSION
To promote integrity in the City's contracting processes and to protect the public interest, the City shall only enter into contracts with responsible- bidders and contractors. In accordance with San Diego Municipal Code §22.0814 (a): *Bidders* and *contractors* who have been *debarred* or *suspended* are excluded from submitting bids, submitting responses to requests for proposal or qualifications, receiving *contract* awards, executing *contracts*, participating as a *subcontractor*, employee, agent or representative of another *person* contracting with the City.

As part of its bid or proposal (Non-Price Proposal in the case of Design-Build contracts), the Bidder shall provide to the City a list of Names of the Principal Individual owner(s).

The names of all persons interested in the foregoing proposal as Principals are as follows:

NAME	TITLE
Please see Attachment A	

IMPORTANT NOTICE: If Bidder or other interested person is a corporation, state secretary, treasurer, and manager thereof; if a co-partnership, state true name of firm, also names of all individual co-partners composing firm; if Bidder or other interested person is an individual, state first and last names in full.

The Bidder, under penalty of perjury, certifies that, except as noted below, he/she or any person associated therewith in the capacity of owner, partner, director, officer, manager:

- Is not currently under suspension, debarment, voluntary exclusion, or determination of ineligibility by any Federal, State or local agency;
- has not been suspended, debarred, voluntarily excluded or determined ineligible by any Federal, State or local agency within the past 3 years;
- does not have a proposed debarment pending; and
- has not been indicted, convicted, or had a civil judgment rendered against it by a court of competent jurisdiction in any matter involving fraud or official misconduct within the past 3 years.

If there are any exceptions to this certification, insert the exceptions in the following space.

Exceptions will be considered in determining bidder responsibility. For any exception noted above, indicate below to whom it applies, initiating agency, and dates of action.

Contractor Name: J.R. Filanc Construction Company, Inc.

Certified By Omar Rodea Title President

Name

Date January 5, 2023

Signature

NOTE: Providing false information may result in criminal prosecution or administrative sanctions.

Attachment A

Name(s) of Member of Firm or Office of Corporation authorized to enter into a binding Contract	City and State of Residence	Employer (if different than Bidder/Proposer)	Interest in Transaction
Mark E. Filanc - Chief Executive Officer	Del Mar, CA	n/a	91.0749%
Omar Rodea - President	Carlsbad, CA	n/a	0.4224%
Vincent L. Diaz - Vice President	Fallbrook, CA	n/a	1.6915%
Norbert J. Schulz - Vice President	Del Mar, CA	n/a	0.5280%
Robert W. Zaiser - Vice President	Cardiff, CA	n/a	1.7600%
David J. Kiess - Assistant Secretary and Vice President	Carlsbad, CA	n/a	1.9872%

DEBARMENT AND SUSPENSION CERTIFICATION
SUBCONTRACTORS, SUPPLIERS AND MANUFACTURERS
TO BE COMPLETED BY BIDDER
FAILURE TO COMPLETE AND SUBMIT AT TIME OF BID SHALL RENDER BID NON-RESPONSIVE

Names of the Principal individual owner(s)

As part of its bid or proposal (Non-Price Proposal in the case of Design-Build contracts), the Bidder shall provide to the City a list of Names of the Principal Individual owner(s) for their subcontractor/supplier/manufacturers.

Please indicate if principal owner is serving in the capacity of **subcontractor**, **supplier,** and/or **manufacturer**:

☐ SUBCONTRACTOR ☐ SUPPLIER ☐ MANUFACTURER

NAME	TITLE
Please see attached	

☐ SUBCONTRACTOR ☐ SUPPLIER ☐ MANUFACTURER

NAME	TITLE

☐ SUBCONTRACTOR ☐ SUPPLIER ☐ MANUFACTURER

NAME	TITLE

☐ SUBCONTRACTOR ☐ SUPPLIER ☐ MANUFACTURER

NAME	TITLE

Contractor Name: J.R. Filanc Construction Company, Inc.

Certified By Omar Rodea Title President

Name

Date January 5, 2023

Signature

USE ADDITIONAL FORMS AS NECESSARY*

DEBARMENT AND SUSPENSION CERTIFICATION
SUBCONTRACTORS, SUPPLIERS AND MANUFACTURERS
TO BE COMPLETED BY BIDDER
FAILURE TO COMPLETE AND SUBMIT AT TIME OF BID SHALL RENDER BID NON-RESPONSIVE

Names of the Principal individual owner(s)

As part of its bid or proposal (Non-Price Proposal in the case of Design-Build contracts), the Bidder shall provide to the City a list of Names of the Principal Individual owner(s) for their subcontractor/supplier/manufacturers.

Please indicate if principal owner is serving in the capacity of **subcontractor**, **supplier**, and/or **manufacturer**:

☒ SUBCONTRACTOR ☐ SUPPLIER ☐ MANUFACTURER

NAME	TITLE
Frank Marquez	President

☐ SUBCONTRACTOR ☐ SUPPLIER ☐ MANUFACTURER

NAME	TITLE

☐ SUBCONTRACTOR ☐ SUPPLIER ☐ MANUFACTURER

NAME	TITLE

☐ SUBCONTRACTOR ☐ SUPPLIER ☐ MANUFACTURER

NAME	TITLE

Contractor Name: Bonita Pipeline, Inc. J.R. FILANC CONSTRUCTION COMPANY, INC.

Certified By Frank Marquez Title President

Name

Francisco J. Marquez Digitally signed by Francisco J. Marquez DN: C=US, E=frank@bonitapipeline.com, O="Bonita Pipeline, Inc.", OU=Administration, CN=Francisco J. Marquez Date: 2023.01.06 13:10:50-08'00' Date 01/06/2023

Signature

USE ADDITIONAL FORMS AS NECESSARY*

DEBARMENT AND SUSPENSION CERTIFICATION
SUBCONTRACTORS, SUPPLIERS AND MANUFACTURERS
TO BE COMPLETED BY BIDDER
FAILURE TO COMPLETE AND SUBMIT AT TIME OF BID SHALL RENDER BID NON-RESPONSIVE

Names of the Principal individual owner(s)

As part of its bid or proposal (Non-Price Proposal in the case of Design-Build contracts), the Bidder shall provide to the City a list of Names of the Principal Individual owner(s) for their subcontractor/supplier/manufacturers.

Please indicate if principal owner is serving in the capacity of **subcontractor, supplier,** and/or **manufacturer**:

☑ SUBCONTRACTOR ☐ SUPPLIER ☐ MANUFACTURER

NAME	TITLE
James Johnson	President
Jeremy Condon	Vice President

☐ SUBCONTRACTOR ☐ SUPPLIER ☐ MANUFACTURER

NAME	TITLE

☐ SUBCONTRACTOR ☐ SUPPLIER ☐ MANUFACTURER

NAME	TITLE

☐ SUBCONTRACTOR ☐ SUPPLIER ☐ MANUFACTURER

NAME	TITLE

Contractor Name: Condon-Johnson & Associates J.R. FILANC CONSTRUCTION COMPANY, INC.

Certified By Thomas Russo Title Estimator

Name

Date 1/11/2023

Signature

USE ADDITIONAL FORMS AS NECESSARY*

DEBARMENT AND SUSPENSION CERTIFICATION
SUBCONTRACTORS, SUPPLIERS AND MANUFACTURERS
TO BE COMPLETED BY BIDDER
FAILURE TO COMPLETE AND SUBMIT AT TIME OF BID SHALL RENDER BID NON-RESPONSIVE

Names of the Principal individual owner(s)

As part of its bid or proposal (Non-Price Proposal in the case of Design-Build contracts), the Bidder shall provide to the City a list of Names of the Principal Individual owner(s) for their subcontractor/supplier/manufacturers.

Please indicate if principal owner is serving in the capacity of **subcontractor**, **supplier**, and/or **manufacturer**:

☒ SUBCONTRACTOR ☐ SUPPLIER ☐ MANUFACTURER

NAME	TITLE
Christine L. Harvey dba Leopold Biological Services	Principal

☐ SUBCONTRACTOR ☐ SUPPLIER ☐ MANUFACTURER

NAME	TITLE

☐ SUBCONTRACTOR ☐ SUPPLIER ☐ MANUFACTURER

NAME	TITLE

☐ SUBCONTRACTOR ☐ SUPPLIER ☐ MANUFACTURER

NAME	TITLE

Contractor Name: Leopold Biological Services J.R. FILANC CONSTRUCTION COMPANY, INC.

Certified By Christine L. Harvey Title Principal

Name

Christine L Harvey Date 1/11/2023

Signature

USE ADDITIONAL FORMS AS NECESSARY*

DEBARMENT AND SUSPENSION CERTIFICATION
SUBCONTRACTORS, SUPPLIERS AND MANUFACTURERS
TO BE COMPLETED BY BIDDER
FAILURE TO COMPLETE AND SUBMIT AT TIME OF BID SHALL RENDER BID NON-RESPONSIVE

Names of the Principal individual owner(s)

As part of its bid or proposal (Non-Price Proposal in the case of Design-Build contracts), the Bidder shall provide to the City a list of Names of the Principal Individual owner(s) for their subcontractor/supplier/manufacturers.

Please indicate if principal owner is serving in the capacity of **subcontractor**, **supplier**, and/or **manufacturer**:

☒ SUBCONTRACTOR ☐ SUPPLIER ☐ MANUFACTURER

NAME	TITLE
Danny J. Barnett	President
Dan Barnett	Principal

☐ SUBCONTRACTOR ☐ SUPPLIER ☐ MANUFACTURER

NAME	TITLE

☐ SUBCONTRACTOR ☐ SUPPLIER ☐ MANUFACTURER

NAME	TITLE

☐ SUBCONTRACTOR ☐ SUPPLIER ☐ MANUFACTURER

NAME	TITLE

J.R. FILANC CONSTRUCTION COMPANY, INC.

Contractor Name: Barnett Quality Control Services, Inc. dba NOVA Services, Inc.

Certified By Danny Barnett Title President

Name

Date 1/12/2023

Signature

USE ADDITIONAL FORMS AS NECESSARY*

DEBARMENT AND SUSPENSION CERTIFICATION
SUBCONTRACTORS, SUPPLIERS AND MANUFACTURERS
TO BE COMPLETED BY BIDDER
FAILURE TO COMPLETE AND SUBMIT AT TIME OF BID SHALL RENDER BID NON-RESPONSIVE

Names of the Principal individual owner(s)

As part of its bid or proposal (Non-Price Proposal in the case of Design-Build contracts), the Bidder shall provide to the City a list of Names of the Principal Individual owner(s) for their subcontractor/supplier/manufacturers.

Please indicate if principal owner is serving in the capacity of **subcontractor, supplier,** and/or **manufacturer**:

☒ SUBCONTRACTOR ☐ SUPPLIER ☐ MANUFACTURER

Jon Kirk	President

☐ SUBCONTRACTOR ☐ SUPPLIER ☐ MANUFACTURER

☐ SUBCONTRACTOR ☐ SUPPLIER ☐ MANUFACTURER

☐ SUBCONTRACTOR ☐ SUPPLIER ☐ MANUFACTURER

Contractor Name: Kirk Paving, Inc. J.R. FILANC CONSTRUCTION COMPANY, INC.

Certified By Jon Kirk Title President

Name

Date 01/12/2023

Signature

USE ADDITIONAL FORMS AS NECESSARY*

DEBARMENT AND SUSPENSION CERTIFICATION
SUBCONTRACTORS, SUPPLIERS AND MANUFACTURERS
TO BE COMPLETED BY BIDDER
FAILURE TO COMPLETE AND SUBMIT AT TIME OF BID SHALL RENDER BID NON-RESPONSIVE

Names of the Principal individual owner(s)

As part of its bid or proposal (Non-Price Proposal in the case of Design-Build contracts), the Bidder shall provide to the City a list of Names of the Principal Individual owner(s) for their subcontractor/supplier/manufacturers.

Please indicate if principal owner is serving in the capacity of **subcontractor**, **supplier**, and/or **manufacturer**:

☑ SUBCONTRACTOR ☐ SUPPLIER ☐ MANUFACTURER

NAME	TITLE
Tom Unsell	Vice President

☐ SUBCONTRACTOR ☐ SUPPLIER ☐ MANUFACTURER

NAME	TITLE

☐ SUBCONTRACTOR ☐ SUPPLIER ☐ MANUFACTURER

NAME	TITLE

☐ SUBCONTRACTOR ☐ SUPPLIER ☐ MANUFACTURER

NAME	TITLE

J.R. FILANC CONSTRUCTION COMPANY, INC.

Contractor Name: SoCal Pacific Construction Corp. dba National Coating & Lining Company

Certified By Tom Unsell Title Vice President

Name

Tom

Signature

Date 1/12/2023

USE ADDITIONAL FORMS AS NECESSARY*

DEBARMENT AND SUSPENSION CERTIFICATION
SUBCONTRACTORS, SUPPLIERS AND MANUFACTURERS
TO BE COMPLETED BY BIDDER
FAILURE TO COMPLETE AND SUBMIT AT TIME OF BID SHALL RENDER BID NON-RESPONSIVE

Names of the Principal individual owner(s)

As part of its bid or proposal (Non-Price Proposal in the case of Design-Build contracts), the Bidder shall provide to the City a list of Names of the Principal Individual owner(s) for their subcontractor/supplier/manufacturers.

Please indicate if principal owner is serving in the capacity of **subcontractor**, **supplier**, and/or **manufacturer**:

☑ SUBCONTRACTOR ☐ SUPPLIER ☐ MANUFACTURER

NAME	TITLE
Seth A. Jamali Dinan	Chief Executive Officer

☐ SUBCONTRACTOR ☐ SUPPLIER ☐ MANUFACTURER

NAME	TITLE

☐ SUBCONTRACTOR ☐ SUPPLIER ☐ MANUFACTURER

NAME	TITLE

☐ SUBCONTRACTOR ☐ SUPPLIER ☐ MANUFACTURER

NAME	TITLE

Contractor Name: LEED Electric, Inc. J.R. FILANC CONSTRUCTION COMPANY, INC.

Certified By Seth A. Jamali Dinan Title Chief Executive Officer

Name

Signature Date 1/6/2022

USE ADDITIONAL FORMS AS NECESSARY*

DEBARMENT AND SUSPENSION CERTIFICATION
SUBCONTRACTORS, SUPPLIERS AND MANUFACTURERS
TO BE COMPLETED BY BIDDER
FAILURE TO COMPLETE AND SUBMIT AT TIME OF BID SHALL RENDER BID NON-RESPONSIVE

Names of the Principal individual owner(s)

As part of its bid or proposal (Non-Price Proposal in the case of Design-Build contracts), the Bidder shall provide to the City a list of Names of the Principal Individual owner(s) for their subcontractor/supplier/manufacturers.

Please indicate if principal owner is serving in the capacity of **subcontractor**, **supplier**, and/or **manufacturer**:

☑ SUBCONTRACTOR ☐ SUPPLIER ☐ MANUFACTURER

NAME	TITLE
Integrity Rebar Placers	Ken Negrete

☐ SUBCONTRACTOR ☐ SUPPLIER ☐ MANUFACTURER

NAME	TITLE

☐ SUBCONTRACTOR ☐ SUPPLIER ☐ MANUFACTURER

NAME	TITLE

☐ SUBCONTRACTOR ☐ SUPPLIER ☐ MANUFACTURER

NAME	TITLE

Contractor Name: Integrity Rebar Placers

Certified By Maria Adams Title Project Coordinator

Name

Date 01/12/23

Signature

USE ADDITIONAL FORMS AS NECESSARY*

City of San Diego

CITY CONTACT: Brittany Friedenreich, Senior Contract Specialist, Email: BFriedenreic@sandiego.gov
Phone No. (619) 533-3104

ADDENDUM A

e - Bidding

FOR

PURE WATER PROGRAM (PWP) CENTRAL AREA SMALL SCALE FACILITY

BID NO.:	**K-23-2119-DBB-3-C**
SAP NO. (WBS/IO/CC):	**B-21151**
CLIENT DEPARTMENT:	**2000**
COUNCIL DISTRICT:	**2**
PROJECT TYPE:	**BO, BI**

BID DUE DATE:

2:00 PM

JANUARY 12, 2023

CITY OF SAN DIEGO'S ELECTRONIC BIDDING SITE, PLANETBIDS

http://www.sandiego.gov/cip/bidopps/index.shtml

A. CHANGES TO CONTRACT DOCUMENTS

The following changes to the Contract Documents are hereby made effective as though originally issued with the bid package. Bidders are reminded that all previous requirements to this solicitation remain in full force and effect.

THE SUBMITTAL DATE FOR THIS PROJECT HAS BEEN **EXTENDED AS STATED ON THE COVER PAGE.**

Rania Amen, Director
Engineering & Capital Projects Department

Dated: *November 21, 2022*
San Diego, California

RA/AJ/na/ez

City of San Diego

CITY CONTACT: Brittany Friedenreich, Senior Contract Specialist, Email: BFriedenreic@sandiego.gov
Phone No. (619) 533-3104

ADDENDUM B

e - Bidding

FOR

PURE WATER PROGRAM (PWP) CENTRAL AREA SMALL SCALE FACILITY

BID NO.: **K-23-2119-DBB-3-C**
SAP NO. (WBS/IO/CC): **B-21151**
CLIENT DEPARTMENT: **2000**
COUNCIL DISTRICT: **2**
PROJECT TYPE: **BO, BI**

BID DUE DATE:

2:00 PM

JANUARY 12, 2023

CITY OF SAN DIEGO'S ELECTRONIC BIDDING SITE, PLANETBIDS

http://www.sandiego.gov/cip/bidopps/index.shtml

ENGINEER OF WORK

The Engineering Specifications and Special Provisions contained herein have been prepared by or under the direction of the following Registered Engineer:

1) Registered Engineer	12/19/2022 Date	Seal:
2) For City Engineer	12-19-22 Date	Seal:

A. CHANGES TO CONTRACT DOCUMENTS

The following changes to the Contract Documents are hereby made effective as though originally issued with the bid package. Bidders are reminded that all previous requirements to this solicitation remain in full force and effect.

B. BIDDER's QUESTIONS

Q1. The current schedule duration for the project is 340 work days. Please consider extending the contract duration based on vendor/manufacturer long lead times.

A1. The contract will be extended 100 working days and will now be a total of 440 working days. Refer to Contract Time in Section D Attachments and Section E Supplementary Special Provisions, Item 3, included in this Addendum.

Q2. Specifications reference section 26 29 23 for Variable Frequency Motor Controllers (VFD). This section appears to be missing from the spec book. Please provide spec section detailing requirements for this equipment.

A2. Please refer to Section 26 24 19 2.10 - Motor Control Center for VFD specifications. References to Section 26 29 23 have been deleted and updated spec Sections (13 34 23.25 and 26 08 00). See Section E Supplementary Special Provisions, Items 6 and 7 included in this Addendum.

Q3. Sheet D-01, Note 7 requires demolition of a prefabricated trench drain that runs the length of the pad. The pictures don't show this and it was not see during the job walk. Please advise.

A3. The pre-fabricated trench drain is beneath the concrete surface. Only the drain covers are visible from the surface.

Q4. Sheet D-01, Note 2 requires tank demo. Please confirm that the tanks will be cleaned by the Owner prior to our demolition so that they can be placed in a normal trash bin.

A4. The contractor needs to comply with all permits, Federal, State, and Local laws as well as the contract specification when it comes to disposal of the tanks.

Q5. Per Note 1 C8 and C9 the pipe must have a union every 5' for maintenance access. This will mean that a pipe support must be utilized every 5' as well. What is the current separation distance between existing Unistrut supports in the trenches? Please provide more photos of what the existing conditions are in the yard trenches so we can accurately access the number of new supports that need to be installed per note 3 on those same pages.

A5. Contractor shall provide pipe supports required per Contract Specifications. City shall be credited if Contractor discovers during construction that existing pipe supports can be used and new pipe supports do not have to be installed.

Q6. Is over excavation required for the new retaining wall shown on S-07?

A6. Over excavate 24 inches below bottom of retaining wall footings and backfill with fill materials compacted to 95%.

Q7. SHT C-11, Key Note #1: The connection type is not clear. Can this line be isolated to perform a cut-in connection? Is a “wet/hot” tap required? May we assume that the existing 6” water line is C900, PVC? Lastly, what is bury depth of the existing 6” waterline? Please confirm existing materials, bury depth and connection type.

A7. A hot tap connection is required. Based on available information, this line is SCH 80 PVC at the connection location, Contractor shall field verify during construction. Existing waterline is approximately 2'-4' below ground surface based on available information and to be field verified by the Contractor during construction.

Q8. Missing specification. The provided project specifications only reference gate valves and valve boxes. We only found detailed information for these materials in the 2021 Green and White books. Please confirm that gate valve materials will adhere to the 2021 Green and White books.

A8. Confirmed that Gate Valves shall be per City's 2021 Greenbook and Whitebook requirements.

Q9. Missing valve schedule. There were several references to a valve schedule however, we found only (2) valves of a certain type. For the stormdrain pump station, the valves appear to be outside of the pump station supplier scope (ie: to be provided by contractor), however appear to be directly buried as there are no vaults shown on the plans.

This seems unusual and unlikely, especially for the swing check valve. Additionally, are we to assume that the check valve materials are to match those of the adjacent pipe? (Excepting of course, the pressure limits of the PVC check valve per the spec). What is the working PSI for this system (and the plant drain system). The pipe schedule in section 40 05 01 shows only a test psi for "DR". This nomenclature applies to many drain systems, including gravity systems. Please clarify condition for valve installation on stormdrain discharge line. Please confirm check valve body materials. Please provide working psi for this and "plant drain" systems.

A9. There are no valves on the Stormdrain Pump Station as shown on Drawing M-24. The valves on the Process Drain Pump Station Discharge shall be installed on top of the existing West Point Loma Interceptor Vault as shown on Drawing M-24 Section A (and are exposed - not buried). Provide Plug Valves per Spec Section 40 05 62.16 and Check Valves per Section 40 05 65.23 both with flanged connections and cast iron body. The system pressure is in the order of 2 psi at the valve location, so standard class 150 valves would be adequate. Updated P&ID Drawing I-30 (deleting the Stormdrain Pump Discharge Valves) is included in this Addendum.

Q10. Spec 40 05 78.23, 2.03 B 1 - The specification appears to require glass lining withing the stainless steel valve body. This would be very unusual. Please confirm lining for stainless steel body ARVs in the spec section referenced.

A10. Glass lining or equal finish is not required for stainless steel valve bodies. See Section E Supplementary Special Provisions, item 10, included in this Addendum.

Q11. Material conflict between specs and plans. In the event of material conflicts, we normally rely on an "order of Precedence" (contract document order, etc.) to determine which material requirement will prevail. We found no Order of Precedence. When this is unavailable, we typically quote "the most stringent", however in this case there seems to be a stronger case in favor of the less expensive materials. The pipe schedule in section 40 05 01 lists a number of systems as being stainless steel however, most of these systems are labeled, clearly as PVC on the plans and the P&IDs. PVC materials are also echoed in several equipment specifications such as 46 31 54. Please confirm materials for

systems: OFBF, OFBE, ODIE, OCE, etc. Please also confirm that systems noted to be PVC (On pipe schedule and plans) are to be S80.

A11. For the ozone process, stainless steel is required for all ozone gas feed lines and off gas lines per the plans and P&IDs. OCE, OCF, ODIE, ODIF, OFBE, and OFBF shall be PVC per the plans and P&IDs and shall be SCH 80. See Section E Supplementary Special Provisions, Item 8, included in this Addendum.

Q12. Missing psi on pipe schedule – section 40 05 01, please provide a test PSI for the BFE system

A12. The test pressure for BPE shall be 45 psi. Spec Section 40 05 01 updated, See Section E Supplementary Special Provisions, Item 8, included in this Addendum.

Q13. ARV shown on plans, not P&IDs. 1" ARV shown/called out on C-10. This valve does not appear on the P&IDs. Please confirm that this valve is required.

A13. The ARV is required and shown on P&ID drawing I-32. Refer to drawing M-03 for location of ARV downstream of strainer.

Q14. PVC S80 unless otherwise noted. DWGs M03, 04, and 05 have a note which reads, "all piping shall be SCH 80 PVC per section 40 05 01.". Are we to assumed that PVC noted on other pages is to be S80? There seems to be an intermittent and inconsistent use of "PVC1" next to some of the system names. We were unable to find parameters that govern its use. Please confirm materials for system labeled "PVC" and "PVC1".

A14. For pipes designated as PVC and PVC1 on drawings, use Sch. 80 PVC pipes.

Q15. Configuration conflict between Plans & P&IDs. MBR area, (system MBRF) the P&IDs do not match the plans regarding size and layout/pipe configuration. Example: DWG M10, Sect "A" shows 4" MBRE with an air gap at the membrane tank, whereas DWG I-51 (E88) shows a connected 8" MBRF pipe. Please confirm materials size, configuration and system nomenclature.

A15. The 4" MBRE is correct. Drawing M-9 and M-10 shows the general configuration of piping arrangement to the MBR equipment. Exact

routing of pipes shall be modified to suit the details of the MBR system provided by the Contractor per 46 61 33. An air gap on the MBRE pipe is not required.

Q16. Vendor-supplied scope unclear as DWG I-52 does not clearly define the vendor supplied scope of materials. The dashed line that normally forms a box around the vendor scope is only shown partially and is not complete. It is difficult to tell if valves VF-510A & B are to be by contractor or package vendor. They do not have an "A" or "B" next to them however, the dashed lines and arrow placements suggest that they may be a part of the vendor package. Please clarify vendor package materials on I-52.

A16. VF-510A and VF-510B are Contractor supplied valves as shown on I-52.

Q17. Configuration conflict between Plans & P&IDs. DWG M09 the MBRE suction lines shows a 4" meter and only (1) butterfly valve, whereas DWG I-55 & I-56 show (2) butterfly valves and NO meter. Please clarify materials required for the line.

A17. FIT-571 shall be located on the discharge side of P-570 as shown in the P&IDs. Updated Mechanical drawings M-09 and M-12 are included in this Addendum.

Q18. System source unknown. DWG M13 shows a 4" potable water line, however its source is unclear as C11 only shows a 2" line going into the bldg. Is this 4" actually the "hose" shown for informational purposes on C11? Please clarify source of 4" potable water line.

A18. The 4" potable water line shown on drawing M-13 is incorrect. The Contractor shall route a 1.5-inch potable water line to along existing retaining wall to hosebibs and eye wash showers EW-236 and EW-233. See updated drawings M-02, M-12, and M-13 included in this Addendum.

Q19. Section 46 31 52, Par. 2.04B states the plant compressed air will meet Class 5.6.4 per ISO 8573.1. Please confirm the dew point will meet Class 4 requirements (less than or equal to +3 deg C 38 deg F).

A19. The dew point will meet Class 4 requirements. Contractor shall provide an air dryer as required per I-27.

Q20. Section 46 61 33, Par. 2.02 plates is mentioned to select as SS316

whereas in sections 43 24 41 Cast iron is mentioned to use. Please confirm which material we have to use.

A20. The filtrate/backwash pump shall be rotary lobe type. Wear plates using cast iron materials is acceptable.

Q21. Section 46 61 33, Par. 2.04 the table states that the RAS pump shall be centrifugal but has reference to general pump specification 43 20 00, which is not available in the tender package provided. Please confirm that the centrifugal type is acceptable.

A21. The RAS pump shall be centrifugal. Reference to specification 43 20 00 was removed. Section 43 23 03 is now referenced in its place. See Section E Supplementary Special Provisions, Item 23, included in this Addendum.

Q22. Section 46 61 33, Par. 2.05 shows the customer needs one air compressor that will provide compressed air to the entire CASSF site in addition to the air demand required for the MBR system. This conflicts with drawing 0100179-11-D, which shows an individual compressor for the MBR system. Additionally, both compressor capacities are different, one is 10 hp and the other is 20 hp. Please clarify what compressor will be provided, and if the WWSS is required to provide.

A22. The air compressor shown on drawings G-11 is a common air compressor for the MBR system and entire CASSF site. The air compressor shall be 20-HP (AC-200) and be supplied by the WWSS.

Q23. Please confirm the desired noise level for the air compressor.

A23. Noise shall be limited to 65 dBA at 5-feet.

Q24. The Maximum ML Flow to the membrane tanks is lower than the design flow out of the tank (design recirculation flow specified in Par. 2.02 alone is greater than the Maximum ML Flow to the membrane tanks). Please clarify the flow balance used to determine the specified Max ML Flow into the membrane tanks.

A24. The capacity of the ML Pump will be revised to 1040 gpm. See Section E Supplementary Special Provisions, Items 17 and 21, and Drawing G-11 included in this Addendum.

Q25. There are different references for the MBR Average Net Design Flow (189 gpm, 201 gpm). Though the design can accomplish both, please clarify the net average design flow.

A25. The 189 gpm is the required net average design flow.

Q26. Where stated that maintenance cleans shall be limited to a maximum of once per week, please clarify if it is once per week per chemical or once per week in total.

A26. To clarify it is once per week per chemical.

Q27. The system as described includes a ML pump that will be called on by the MBR vendor. The MBR vendor also controls a RAS pump operating based on a RAS flow setpoint. Typically, MBR systems are either "pump to" wherein ML is pumped to the MBR and RAS is recirculated via gravity, or "pump from" where ML flows by gravity to the MBR and RAS is pumped back. Please clarify why the decision was to have both.

A27. The design includes an ML pump and RAS pump to allow testing multiple conditions including a lower HRT within the BNR tanks. The pumps allow for better flow balance and control in conjunction with the IMLR pump.

Q28. The spec shows to use AWWA C504 butterfly valves. We request the use of Bray valves that exceed the AWWA C504 specification.

A28. There are no exceptions noted to the use of Bray Valves as an equal product.

Q29. Please include a mass flow controller sized for 120 scfh (2 scfm) to the list of required instrumentation.

A29. Instruments shown on contract documents are minimum required. WWSS may provide additional instruments required for satisfactory operation of the system.

Q30. Reference P&ID I-91. This shows the RO Feed tank to be labeled TNK-900, however spec 43 41 48, Page 2 refers to the tank as TNK-1000. Please clarify which tank number is correct?

A30. TNK-900 is the correct ID, per the P&IDs and plans. See Section E, Supplementary Special Provisions, Item 19, included in this Addendum.

Q31. Reference the Notice Inviting Bids, paragraph 12.2. This paragraph states "Questions received less than 14 days prior to the date for opening of Bids may not be considered.". Please confirm that the question deadline of 14 days prior to the date for opening of Bids will move in relation to the extended bid due date of January 12, 2023, which would put the new question deadline date as 12/29/2022.

A31. Correct, deadline is 14 days prior to the date for opening of Bids.

Q32. The Bid Documents refer to "Design-Builder" in sections listed below. Please confirm that this is not a Design-Build project.

a. Notice Inviting Bids, Item No. 10

b. Section 43 05 21 - 1.07.C

c. Section 43 23 03 - 3.04.A

A32. Confirmed, this is a Design-Bid-Build project. See Section C. Notice of Inviting Bids, item 1 and Section E, Supplementary Special Provisions, Items 14 and 15 included in this Addendum.

Q33. P&ID Drawing I-33 shows an Ammonia Analyzer Sample Tank TNK-662, however, this tank does not show up in Spec 43 41 48 – Polyethylene tanks or elsewhere in the specifications. Can you please provide information for this tank? (Material, capacity, outlets, etc.)

A33. Per Drawing M-06 keynotes 18 and 19 and M-08 keynote 12, the tank is a 55-gallon plastic open-head drum. See Section E, Supplemental Special Provisions, Item 11 included in this Addendum. In addition, note that additional revisions are made to Spec Section 40 91 12 on the TOC Analyzer. See Section E, Supplemental Special Provisions, Item 12 included in this Addendum.

Q34. Spec Section 13 34 23.25, PRE-FABRICATED ELECTRICAL EQUIPMENT ENCLOSURE, Section 2.03 states " B. Enclosure roof, walls, and floor shall be constructed of 5,000 psi minimum reinforced concrete". However, Section 1.01,D,1 states "Fabricated metal enclosure designed to be moved and installed as a single unit." Please confirm that the enclosure is a pre-fabricated metal structure.

A34. Pre-fabricated electrical enclosure shall be per Spec 13 34 23.25 - 1.03 DESIGN CRITERIA. See Section E, Supplementary Special Provisions, Item 5, included in this Addendum.

Q35. Please provide a specification section for the asphalt paving scope of work or confirm that asphalt paving shall be installed per Greenbook Section 203-6.

A35. Asphalt paving shall be per Greenbook requirements.

Q36. Keynote 1 on Sheets C-02/03/04/05 states "DEMOLISH EXISTING ACCESS ROAD, GRADE PER SHEET C-05". Please confirm that the existing access road is consistent with Road Section 2 on Sheet C-12. Additionally, Sheet C-05 only shows grade for part of the road, please provide complete information of new grade vs. existing grade along entire access road.

A36. Contractor shall assume existing access road is consistent with Road Section 2. City shall be credited if Contractor discovers during construction that existing access road is composed of less asphalt or less base material than shown on Road Section 2. Existing grade and proposed grade for the access road is shown between sheets C-04 and C-05 via spot elevations and contours. Grading for the road shall be per both sheets C-04 and C-05.

Q37. Regarding Keynote 2 on Sheet D-03, please confirm if the edges of the existing slab demolition will need to be sawcut on any sides or all sides will be demolished to asphalt or native soils. Regarding Keynote 1 on Sheet D-03, only part of the existing retaining wall is shown - for the remaining portion to the southeast (not shown), please confirm if it should also be demolished or if the slab to be demolished should be sawcut flush to the wall. Additionally, please confirm that it will not be the Contractor's responsibility to relocate the existing storage bins, containers, and stored materials from the slab, as shown on Photo 1 on Sheet D-02.

A37. The entire existing retaining wall south of Area 4 is to be removed. Sawcut or breakout the slab will be required on the south and west sides of Area 4. City will remove/relocate existing storage bins, containers, and stored materials from the slab prior to construction.

Q38. Specification Section 43 23 89.13 calls for IMLR Pump P-440 to have a 2 HP motor. Meanwhile, Sheets G-11 and E-22 indicate this pump should have a 7.5 HP motor. Please clarify which is correct.

A38. IMLR Pump P-440 has a 7.5 HP Motor. The motor size shown on the drawings are correct. See Section E, Supplementary Special Provisions, Item 16, included in this Addendum.

Q39. The three types of BFV's described in the spec do not have valve end conditions in their details. Please revise the spec to show in greater detail the types of valves intended for the design (ie. Manufacturer, models, valve end conditions).

A39. Per 40 05 64 2.02 A, flanged valves are generally required with the option of wafer type for exposed applications.

Q40. Sheet S-21 shows pile lengths for some of the piles. Please confirm that the piles along Grid Line N have an embedment of 45', piles along Grid Line M.5 have an embedment of 60', piles between Grid Line M and H have an embedment of 50', and provide the embedment of the piles along Grid Line M.

A40. See pile plan for Area 7 on S-21 and Area 8 on S-34. A complete grid system is shown on S-07. Both sheets note all piles are 45'-0" min unless otherwise noted. On S-21 the pile at Grids 9.5 and K.5 is called out to be 50' and the pile at Grids 10.3 and M.5 is called out to be 60'. On S-34 the pile at Grids 10.2 and I.2 is called out to be 50'.

Q41. Is over excavation required for the concrete ramp and stairs shown on S-07?

A41. Yes, over excavate 24 inches then backfill with fill materials compacted to 95%.

Q42. The equipment pad schedule on S-31 referenced detail 2/S-13 which is for an existing slab. Please confirm that the dowels can be cast in the slabs in lieu of being drilled in for all locations where there is not an existing slab.

A42. Confirmed that dowels can be cast in slab in lieu of being drilled-in at all locations with new slabs. Embed per typical details See Drawings S10 and S11/S-05.

Q43. Clarifying question that was posed during the pre-bid site visit regarding Coastal Development Permit Waiver and the 65 dB requirement if gnatcatcher nest are observed, and where that dB level is measured.

A43. Once the pre-construction survey for gnatcatchers is completed and if there are any nests identified within the 500-ft radius stated in the waiver, then the noise level should be measured at the location of the

nest. The noise level should be measured before any construction begins to get a baseline for the project at the nest as well. However, if the biologist does determine a buffer is needed, the biologist on the project will usually determine what distance is needed to make sure the nest is protected and not impacted. If noise does exceed the limit of what is set, then adjustments would need to be made such as can the work being done move further way from the nest, or only so much noise level may be permitted per hour, or is there other equipment that can be used to help lower the dBs, etc.

Q44. Clarifying weight limitations on main access road to Point Loma Wastewater Treatment Plant

A44. The City has an imposed weight limit of 80,000 lbs on the access road leading into the PLWTP (main plant entrance to the south). Additional information is now provided on Drawing S-02 included in this Addendum.

Q45. S-35 shows a freestanding wall. Please provide the length of the wall.

A45. The freestanding wall along Grid 10.5 is approximately 17'-5" long.

Q46. In Section 01 29 00 of the specifications item 1.05-D states the mobilization payment is 1% of the contract value. The Whitebook Section 7-3.4.1 allows for the mobilization to be up to 3% of the contract value. Due to the size of this project and large amount of material procurement it is requested that the mobilization payment be increased to 3% of the contract value.

A46. See Section E, Supplementary Special Provisions, Item 2, included in this Addendum.

Q47. C-08 thru C-10 shows the piping strapped to the ground and to the wall. What is the strap spacing for the ground and the wall?

A47. Pipe Support Design is the responsibility of the Design Professional to be engaged by the Contractor per Spec Section 40 05 01. In general, pipe support spacing shall be per Table A on Drawing M-25.

Q48. Key note 9 and 13 on M-16 refer to the Metering pumps to be the responsibility of the Contractor. In spec section 46 33 42.16

(Hydraulically Driven Diaphragm Pumps) in section B it reads "The Equipment supplier shall furnish and install complete chemical metering systems." Please clarify who is responsible for these pump skids.

A48. The sulfuric acid and antiscalant metering pump skids shall be provided by the Contractor and not by the RO equipment manufacturers. Please see 46 63 23.01 Section 2.08 A and 2.09 A; 46 63 23.02 Section 2.09 A and 2.10 A; and 46 63 23.03 Section 2.08 A and 2.09 A. See Section E, Supplementary Special Provisions, Item 20, included in this Addendum.

Q49. Regarding Site Security Clearances - Spec Section 01 31 13 - 1.05(A)(2) states "The Contractor shall comply with and coordinate with PLWTP security requirements". Please advise on the following:

1. What are PLWTP security (site access) requirements?

2. Since PLWTP is accessed through Navy property, are employees required to have specific security clearances/badging?

a. If so, is the contractor responsible for fees associated with security clearances/badging and what are said fees?

A49. There is no specific security clearance/badge required, as you will not be entering Navy-restricted areas. Since there is no after-hours work anticipated, then there should be no specific site security access requirements other than checking in with the security at the PLWTP entrance (and National Park Service if after 09:00 am).

Q50. Regarding SLBE/ELBE claimable participation. Subcontractors and Manufacturers receive 100%, suppliers receive 60%. What is the claimable percentage for bare rental of construction equipment?

A50. Please refer to the solicitation, Attachment C, section C.1.(c), a Supplier incudes a firm that leases equipment to the public.

Q51. In the EOCP - Section B - SLBE-ELBE Subcontracting Requirements, Section C goes over the subcontractor participation (Page 38) Within this section reference is made to forms AA40 - Named Equipment/Material Supplier List and form AA35 - List of Subcontractors. It is indicated that these forms need to be submitted with the bid. Forms AA40 and AA35 could not be found in the specification package and are not included in the list of required documents schedule during bidding and awarding

(page 4). Please clarify if forms AA40 and AA35 are to be submitted with the bid and if so please provide the forms and indicate where in the electronic submission they should be included.

A51. Page 38 of the solicitation, Attachment C, section D(a)states that "The Bidder shall achieve the mandatory Subcontractor participation requirement or demonstrate GFE." To demonstrate GFE, the Bidder must submit the GFE documentation, including Forms AA35 and AA40. Form AA35 – List of Subcontractors is provided on page 1578 and Form AA40 - Named Equipment/Material Supplier List is provided on page 1579 of the original bid solicitation document. These forms can also be downloaded from this link: https://www.sandiego.gov/eoc/forms. Please refer to Notice Inviting Bids, section 9.2, and Attachment C of the solicitation for more information.

Q52. On page M-04, Please confirm: The pump discharge diameter, the (3) sizes of the first Tee after the pump discharge (that branches into the ball valve + cam lock cap), and whether the plug valve along the suction line into pump P-320 is 4" (Key note 7) or 3" (Keynote 15)

A52. The pump is shown with a 3" suction and 3" discharge port. A reducer shall be selected to match the actual pump discharge to the 4" pipe. The plug valve at the suction line is 4" with a reducer downstream to match actual pump suction size.

Q53. On Page M-12, the MBRE line runs through (2) 45°Elbows before tying into the pipe loops. On page M-13, there are (3) 90°Elbows before tying into the pipe loops. Please verify the correct route.

A53. The three (3) 90-degree elbows as shown on M-13 is correct.

Q54. Related to MF and RO Equipment in Section 46 61 36 and 46 63 23.01.3. In the specifications section 46 61 36 part 1.03.D it says the equipment is to be designed for outdoor use but does not indicate if this equipment will be under a canopy.

Will the Membrane Filtration equipment be covered by a process canopy to shelter the equipment from direct sunlight and rain as will the RO equipment? In section 46 63 23.01 Part 1.02.I it indicates the RO

equipment will be under a canopy. This will impact the materials used for piping. If the equipment will be in direct sunlight, we recommend CPVC is used instead of PVC for piping.

A54. A canopy will be provided to cover the MF equipment, as shown on sheet S-23 and See Section E, Supplementary Special Provisions, Item 24, included in this Addendum.

Q55. Regarding Section 46 61 36, Part 2.02. In Part 2.02.A.5 it says major components of the MFS include chemical dosing pumps for the automated maintenance clean system. Then in Part 2.02.B.6 it says Chemical dosing pumps are provided by the contractor and shall require interface with the MFS.

We assume the contractor is providing the chemical dosing pumps for the automated maintenance clean system but they will be controlled by the MFS – can you please confirm this?

A55. Part 2.02.B.6 is correct: all chemical pumps which move the chemical from the chemical storage area to the skid are provided by the Contractor. The MFS PLC shall communicate to these pumps through the Master Plant PLC. See Section E, Supplementary Special Provisions, Item 25, included in this Addendum.

Q56. P&ID I-74 shows 4" ball valves (VB-750 & 751) on the BACF lines, however per spec 40 05 60, 2.01 (Valve Type Table), these should be butterfly valves. And, based on the butterfly valve spec, it seems that they are to be DI body, AWWA C504 butterfly valves. I-82 & 83 show a total of (3) tanks with 3" drain lines. Tanks on I-83 show ball valves, whereas the tank on I-82 calls for a butterfly valves. According to spec 40 05 60, 2.01 (Valve type by service table), drain lines should have plug valves. These (2) examples may not include all valve type conflicts. There are some 1" process drain lines also showing ball valves. Please confirm valve type.

A56. See Section E, Supplementary Special Provisions, Item 9, revised to specify ball valves on the BACF lines, per P&ID Drawing I-74 and included in this Addendum.

Spec 40 05 60, 2.01 has been revised to allow butterfuly and ball valves to be acceptable for use on drain lines. Drain line valves should be provided as indicated on the Drawings for each specific application.

Q57. We have found notable sizing conflicts between the plans, the P&IDs and the "Tank Nozzle Info" plan sheets. Systems include (not limited to):

BACF (4” or 2”?), MFF (3” or 4”?), MFRROP (2” or 3”), etc. Please confirm sizing (all affected systems, whether or not listed here).

A57. BACF shall be 3". MFRROP shall be 3". MFF shall be 3". Drawings M-15, M-16, I-74, I-81, I-82, and I-86 have been revised accordingly and included in this Addendum.

Q58, Per spec 40 05 01 (Pipe Sch) system MCCROF is supposed to be PVC up to the feed/transfer pump and then it should become a high-pressure system made of stainless-steel materials, however DWG M16 & 17 clear call out for PVC materials. May we assume that the plans are in error and the Pipe Sch is correct? Please confirm MCCROF materials.

A58. The plans are correct. The piping shall be PVC up to the high pressure feed pump for each RO system, which are located on each of the vendor provided skids. Stainless steel piping shall be provided by each of the RO equipment manufacturers and PVC shall be provided by the Contractor up to the connection to the skids.

C. NOTICE INVITING BIDS

1. To Section **10, Pre-Bid Site Visit**, page 7, **DELETE** in its entirety and **SUBSTITUTE** with the following:

   10. PRE-BID SITE VISIT: All those wishing to submit a bid **MUST** visit the Work Site with the Engineer. The purpose of the Site visit is to acquaint Bidders with the Site conditions. To request a sign language or oral interpreter for this visit, call the Purchasing & Contracting Department, Public Works Division at (619) 533-3450 at least 5 Working Days prior to the meeting to ensure availability. Failure to attend the **Mandatory** Pre-Bid Site Visit may result in the Design-Bid-Builder’s Bid being deemed non-responsive.

D. ATTACHMENTS

1. To Attachment A, Scope of Work, **Section 3**, page 23, **DELETE** in its entirety and **SUBSTITUTE** with the following:

   3. CONTRACT TIME: The Contract Time for completion of the Work shall be **440 Working Days** which include **50 Working Days** for Project Acceptance.

E. SUPPLEMENTARY SPECIAL PROVISIONS

1. To Section 5 – Legal Relations and Responsibilities, **Sub-Section 5-4.8**, page 61, **DELETE** in its entirety and **SUBSTITUTE** with the following:

   5-4.8 Notice of Changes to Insurance. You shall notify the City, in writing, 30 days prior to any material change to the policies of insurance provided under this Contract. This written notice is in addition to the requirements of paragraph 6 of Section 5-4.1.

2. To Attachment E, **TECHNICALS**, Section 01 29 00 Payment Procedures, Part 1, General, Item 1.05 Schedule of Values, Sub-Item D. Limitations, Item **1**., page 77 **DELETE** in its entirety, and **SUBSTITUTE** with the following:

   D. Limitations:

   1. The values of the activities listed below are limited as indicated. The limit is the percent of the Total Contract Price.

ACTIVITY	LIMIT
Mobilization	3.0 Percent, maximum
Contractor Quality Control Program	0.5 Percent, minimum
180-Day Schedule Approval	0.25 Percent
Baseline Schedule Approval	0.5 Percent
O&M Data (Manuals)	1.0 Percent-minimum
Functional Testing	1.5 Percent-minimum
Performance Testing	1.0 Percent-minimum
Project Record Documents	0.5 Percent-minimum
Demobilization	0.5 Percent-minimum

3. To Attachment E, **TECHNICALS**, Section 01 33 00 Submittal Procedures**, Part 1 General,** page 134, **ADD** the following:

   1.05 SUBMITTALS FOR LONG LEAD ITEMS

   A. This clause applies to items with a lead time (time between approval of submittal and delivery of material to site) of 32

weeks and over. The following approach shall be followed to keep the project on schedule.

1. Within two weeks of Notice to Proceed, the Contractor shall submit a list of systems /equipment with lead times of 32 weeks and over. The list shall identify the component (e.g. electrical gear for the system, PLC for the system) that is causing the long lead time and the earliest possible submittal date.

2. The Contractor in coordination with the System/Equipment Vendor shall submit details of item (a partial submittal can be provided if approved by the Engineer) if ordering this item on priority does not impact other components of the system. Examples (not an exhaustive list) of not impacting other components include: enough I/O points for PLCs, enough feeders/breakers/starters of adequate capacities for anticipated electrical equipment on MCCs, sufficient space in skid for accommodating all planned equipment/piping of the system etc. The System/Equipment Supplier shall include a confirmation that the requirements have been coordinated and ordering the long lead component will not have any adverse impact to the system when the system design is completed.

3. The Contractor/System Supplier shall be prepared and be available for review meetings to discuss the submittal and resolve any outstanding items immediately after submitting the details.

4. To Attachment E, **TECHNICALS**, Section 13 34 23.25 Pre-Fabricated Electrical Equipment Enclosure, Part 1 General, page 442 to 443, 1.02**,** QUALITY ASSURANCE, Item A, References**, Sub-Item 2, TABLE** (Reference/Title) **DELETE** in its entirety, and **SUBSTITUTE** with the following:

Reference	Title
IBC	International Building Code

5. To Attachment E, **TECHNICALS**, Section 13 34 23.25 Pre-Fabricated Electrical Equipment Enclosure, Part 2 Products, Item 2.03 Enclosure, **Subitem B,** page 446, **DELETE** in its entirety, and **SUBSTITUTE** with the following:

   B. Enclosure roof slope shall be a minimum of 1-inch to the rear or side of the enclosure as controlled by the shortest distance. Enclosure exterior and interior, doors, and frames shall be painted as specified in Section 09 90 00.

6. To Attachment E, **TECHNICALS**, Section 13 34 23.25 Pre-Fabricated Electrical Equipment Enclosure, Part 2 Products, Item 2.07, ELECTRICAL DISTRIBUTION EQUIPMENT, **Subitem L,** page 448, **DELETE** in its entirety, and **SUBSTITUTE** with the following:

   L. VFD in in accordance with Section 26 24 19-2.10, VARIABLE FREQUENCY DRIVES.

7. To Attachment E, **TECHNICALS**, Section 26 08 00 Commissioning of Electrical Systems, Part 3, Execution, Item 3.03 Testing Firm Acceptance Testing Requirements**, Subitem D, Acceptance Testing Firm Tests,** pages 512 to 513, **DELETE** in its entirety, and **SUBSTITUTE** with the following:

   D. Acceptance Testing Firm Tests:

      1. Acceptance testing procedures and test results shall be as specified in ANSI/NETA ATS. The following types of equipment and systems shall be inspected and tested by the Testing Firm. Acceptance testing work shall not be limited to equipment shown on the drawings. Refer to Division 26 specification for the electrical equipment specified.

         a. Refer to the electrical drawings for location and identification of the electrical distribution system equipment, utilization equipment, and electrical conductors, included but not limited to as applicable:

            1) Transformers Dry-Type Air-Cooled.

            2) Cables Low-Voltage 600 Volt Maximum.

            3) Protective Relays.

4) Instrument Transformers.

5) Metering, include non-utility power metering equipment.

6) Grounding Systems include installed grounding systems and existing grounding systems that are being utilized.

7) Ground Fault Protection Systems.

8) Motors.

9) Motor Starters Low-Voltage.

10) Motor Control Centers Low-Voltage.

11) Surge Protection Devices, include lightning arresters, surge capacitors, and TVSS.

12) Capacitors and Inductors.

13) Uninterruptible Power Systems (UPS).

14) Manual Transfer Switched (MTS).

8. To Attachment E, **TECHNICALS**, Section 40 05 01 Piping Systems, Part 2, Products, Item **2.01**, **Pipe Materials – General**, pages 588 to 590, **DELETE** in its entirety, and **SUBSTITUTE** with the following:

2.01 PIPE MATERIALS – GENERAL

All pipe materials to be new, free from defects and conforming to the requirements and shall be per the table below for various applications.

Process Service Identifier	Process Service	Material	Test Pressure , psig	Pipe Marker Background Color
AOHD	Acetic Acid	PVDF / PFA	45	Orange
AMM	Liquid Ammonium Sulfate	PVC / PFA	45	Orange
AS	Antiscalant	PVC / PFA	45	Orange
BACE	BAC Filtrate	PVC	45	Green
BACF	BAC Feed	PVC	45	Green
BPE	Blended Primary Effluent	PVC	45	Green
CS	Caustic Soda	PVC / PFA	45	Orange

DR	Drain	PVC	45	Green
IA	Instrument Air	Stainless Steel	130	Blue
IMLR	Internal Mixed Liquor Return	PVC	45	Green
MBRAS	Membrane Bioreactor Air Scour	Stainless Steel	45	Blue
MBRE	Membrane Bioreactor Effluent	PVC / PVC1	45	Blue
MBRF	Membrane Bioreactor Feed	PVC / PVC1	45	Green
MBRPFC	Preformed Chloramines to MBR	PVC/PFA	45	Green
MCCROC	CCRO Concentrate	Stainless Steel (up to Control Valve) / PVC downstream of Control Valve	450 / 45	Green
MCCROF	CCRO Feed	PVC (up to HP RO Feed Pump) / Stainless Steel (up to RO Skids)	60 / 450	Green
MCCROP	CCRO Permeate	PVC	45	Green
MCOMBP	Murray Combined RO Permeate Diversion to RO Flush Tank	PVC	45	Green
MFAS	Membrane Filtration Air Scour	Stainless Steel	45	Blue
MFE	Membrane Filtration Effluent	PVC	45	Blue
MFF	Membrane Filtration Feed	PVC	45	
MFRROC	FRRO Concentrate	Stainless Steel (up to Control Valve) / PVC downstream of Control Valve	450 / 45	Green
MFRROF	FRRO Feed	PVC (up to HP RO Feed Pump) / Stainless Steel (up to RO Skids)	60 / 450	Green
MFRROP	FRRO Permeate	PVC	45	Green
ML	Mixed Liquor	PVC	45	Green
MPFC	Preformed Chloramines to Murray MF Feed	PVC/PFA	45	Green
MROC	Murray 3-Stage RO Concentrate	Stainless Steel (up to Control Valve) / PVC downstream of Control Valve	450 / 45	Green
MROF	Murray 3-Stage RO Feed	PVC (up to HP RO Feed Pump) / Stainless Steel (up to RO Skids)	60 / 450	Green

MROP	Murray 3-Stage RO Permeate	PVC	45	Green
MUVF	Murray UV/AOP Feed	PVC	45	Green
OCE	Ozone Contactor Effluent	PVC	45	Green
OCF	Ozone Contactor Feed	PVC	45	Green
ODIE	Ozone Direct Injection Effluent	PVC	45	Green
ODIF	Ozone Direct Injection Feed	PVC	45	Green
OFBE	Ozone Fine Bubble Diffuser Effluent	PVC	45	Green
OFBF	Ozone Fine Bubble Diffuser Feed	PVC	45	Green
OFG	Ozone Off Gas	Stainless Steel	45	Yellow
OZG	Ozone Gas	Stainless Steel	45	Yellow
PA	Plant Air	Stainless Steel	45	Blue
PE	Primary Effluent	PVC	90	Green
PI	Primary Influent	PVC	135	Green
PW	Potable Water (City water)	PVC	120	Green
RAS	Return Activated Sludge	PVC	45	Green
SBS	Sodium Bisulfite	PVC/PFA	45	Orange
SHC	Sodium Hypochlorite	PVC/PFA	45	Orange
SOA	Sulfuric Acid	CPVC/PFA	45	Orange
SVPFC	Preformed Chloramines to SV RO Feed	PVC/PFA	45	Green
SVROBACF	BAC Filtrate Diversion to San Vicente 3-Stage RO Feed	PVC	45	Green
SVROC	San Vicente 3-Stage RO Concentrate	Stainless Steel (up to Control Valve) / PVC downstream of Control Valve	450 / 45	Green
SVROF	San Vicente 3-Stage RO Feed	PVC (up to HP RO Feed Pump) / Stainless Steel (up to RO Skids)	60 / 450	Green
SVROP	San Vicente 3-Stage RO Permeate	PVC	45	Green
SVUVF	San Vicente UV/AOP Feed	PVC	45	Green
UVE	Combined UV/AOP Effluent to Drain	PVC	45	Green
UW1	Potable Water (City water)	PVC	120	Green
UW2	Spray Water	PVC	120	Green

V	Vent	PVC	45	Green
WAS	Waste Activated Sludge	PVC	45	Green

9. To Attachment E, **TECHNICALS**, Section 40 05 60 Valves, Part 2, Products, Item **2.01**, **Valve Types,** page 704, **DELETE** in its entirety, and **SUBSTITUTE** with the following:

2.01 VALVE TYPES

A. Valve types for various services shall be per table below.

Process Service Identifier	Process Service	Valve Type	Valve Specification
AOHD	Acetic Acid	Ball	40 05 63.53
AMM	Liquid Ammonium Sulfate	Ball	40 05 63.06
AS	Antiscalant	Ball	40 05 63.06
BACE	BAC Filtrate	Butterfly	40 05 64
BACF	BAC Feed	Ball	40 05 63.06
BPE	Blended Primary Effluent	Plug	40 05 62.16
CS	Caustic Soda	Ball	40 05 63.06
DR	Drain	Plug, Ball, or Butterfly	40 05 62.16, 40 05 63.06, 40 05 64
IA	Instrument Air	Ball	40 05 63.03
IMLR	Internal Mixed Liquor Return	Plug	40 05 62.16
MBRAS	Membrane Bioreactor Air Scour	Butterfly	40 05 64
MBRE	Membrane Bioreactor Effluent	Butterfly	40 05 64
MBRF	Membrane Bioreactor Feed	Plug	40 05 62.16
MBRPFC	Preformed Chloramines to MBR	Ball	40 05 63.06
MCCROC	CCRO Concentrate	Butterfly	40 05 64
MCCROF	CRRO Feed	Butterfly	40 05 64
MCCROP	CCRO Permeate	Ball	40 05 63.06
MCOMBP	Murray Combined RO Permeate Diversion to RO Flush Tank	Ball	40 05 63.06

MFAS	Membrane Filtration Air Scour	Butterfly	40 05 64
MFE	Membrane Filtration Effluent	Ball	40 05 63.06
MFF	Membrane Filtration Feed	Butterfly	40 05 64
MFRROC	FRRO Concentrate	Butterfly	40 05 64
MFRROF	FRRO Feed	Butterfly	40 05 64
MFRROP	FRRO Permeate	Ball	40 05 63.06
ML	Mixed Liquor	Plug	40 05 62.16
MPFC	Preformed Chloramines to Murray MF Feed	Ball	40 05 63.06
MROC	Murray 3-Stage RO Concentrate	Butterfly	40 05 64
MROF	Murray 3-Stage RO Feed	Butterfly	40 05 64
MROP	Murray 3-Stage RO Permeate	Ball	40 05 63.06
MUVF	Murray UV/AOP Feed	Butterfly	40 05 64
OCE	Ozone Contactor Effluent	Ball	40 05 63.03
OCF	Ozone Contactor Feed	Ball	40 05 63.03
ODIE	Ozone Direct Injection Effluent	Ball	40 05 63.03
ODIF	Ozone Direct Injection Feed	Ball	40 05 63.03
OFBE	Ozone Fine Bubble Diffuser Effluent	Ball	40 05 63.03
OFBF	Ozone Fine Bubble Diffuser Feed	Ball	40 05 63.03
PA	Plant Air	Butterfly	40 05 64
PE	Primary Effluent	Butterfly	40 05 64
PI	Primary Influent	Butterfly	40 05 64
PW	Potable Water (City water)	Ball	40 05 63.09
RAS	Return Activated Sludge	Plug	40 05 62.16
SBS	Sodium Bisulfite	Ball	40 05 63.06
SHC	Sodium Hypochlorite	Vented Ball	40 05 63.06
SOA	Sulfuric Acid	Ball	40 05 63.53
SVPFC	Preformed Chloramines to SV RO Feed	Ball	40 05 63.06
SVROBACF	BAC Filtrate Diversion to San Vicente 3-Stage RO Feed	Butterfly	40 05 64
SVROC	San Vicente 3-Stage RO Concentrate	Butterfly	40 05 64
SVROF	San Vicente 3-Stage RO Feed	Butterfly	40 05 64

SVROP	San Vicente 3-Stage RO Permeate	Ball	40 05 63.06
SVUVF	San Vicente UV/AOP Feed	Butterfly	40 05 64
UVE	Combined UV/AOP Effluent to Drain	Ball	40 05 63.06
UW1	Potable Water (City water)	Ball	40 05 63.06
UW2	Spray Water	Ball	40 05 63.06
WAS	Waste Activated Sludge	Plug	40 05 62.16

10. To Attachment E, **TECHNICALS**, Section 40 05 78.23 Air/Vacuum Valves for Wastewater Service, Part 2, Products, Item 2.03, Construction, Sub Item **B. Body**, page 756, **DELETE** in its entirety, and **SUBSTITUTE** with the following:

    B. Body:

        1. The valve body shall be sized to assure the unobstructed annular space between the valve floats and the inner surface of the valve body exceeds the cross-sectional area of the valve's inlet and outlet connections. Valved upper and lower flushing ports (1/2 inch minimum) shall be provided. Materials for flushing ports shall be the same as the body.

11. To Attachment E, **TECHNICALS**, Section 40 91 12 Process Analyzer Measuring Systems, Part 2 Products, Item 2.06, Ammonia And Nitrate, Sub Item D, page 895, **DELETE** in its entirety, and **SUBSTITUTE** with the following:

    D. Ammonia Gas Selective Electrode (GSE) Analysis System (for Blending Tank Effluent)

        1. Ammonia Analysis: ammonia in the sample is converted to ammonia gas. Only the gaseous ammonia gas passes through the gas-permeable membrane of the GSE electrode and is detected and measured with a GSE.

        2. The analyzer shall be able to detect ammonia over a minimum range of 5.0 to 1,000 mg/L NH3-N, with an accuracy of +/-3%

        3. The minimum frequency of measurements shall be at least once every 5 minutes.

4. The analyzer shall have a display showing the measured ammonia concentration

5. The analyzer enclosure shall meet a minimum rating of NEMA 4X.

6. Locations:

    a. Ammonia Analyzer Sample Tank in Area 4 BNR Tank.

        1) Ammonia Analyzer Sample Tank shall be a 55-gallon open-head, polyethylene or equal drum with a minimum dimension of 23" diameter x 35" height.

        2) Inlet: Bottom fill approximately 4" from bottom. Fill pattern should eliminate dead zones by filling from bottom with an overflow near the top at 180 degrees from the inlet. Filtrax (Hach) filtration module is submerged in the tank with hose connected to control unit outside of tank. Plumb connection from filtration module to control unit. Allow for access to lift filtration module out of 55-gallon drum by operators.

        3) Outlet: Overflow approximately 6" from top.

7. The ammonia GSE analysis system shall be as manufactured by:

    a. HACH Amtax sc Ammonium analyzer with sc200 controller

8. The sample shall have suspended solids removed using membrane modules and shall use peristaltic pumps (housed in a control unit) to deliver the filtered sample to the analyzer. The sample preparation instrument (filtration/pump) shall be manufactured by:

    a. Hach Filtrax (5739100)

    b. Or approved equal

12. To Attachment E, **TECHNICALS**, Section 40 91 12 Process Analyzer Measuring Systems, Part 2 Products, Item 2.08, Total Organic Carbon, Sub Item **B**. **Total Organic Carbon (TOC) Analysis System**. page 897, **DELETE** in its entirety, and **SUBSTITUTE** with the following:

    B. Total Organic Carbon (TOC) Analysis System.

        1. The TOC analysis system shall provide continuous monitoring of water using membrane conductometric technology and UV-persulfate oxidation to detect organic contaminants. The system shall measure the oxidation of organic carbon to carbon dioxide and shall be compliant with USEPA approved analytical methods (SM 5310C and USEPA 415.3).

        2. An instrument sample flowrate of 50 mL/min between 41° - 140°F is required. Supported measuring range shall be 0.004 to 50 ppm (mg/L) with accuracy ± 2% or ± 0.5 micrograms per liter, whichever is greater. Online precision shall be less than 1% relative standard deviation. Analysis time shall be 2 minutes or less.

        3. The display readout shall be 3 significant digits on a minimum 7" backlit color LCD with touch screen.

        4. If the sample extraction point is not within 6ft (2m) of the analysis system, a compressor driven vacuum sampler shall be furnished as part of the analysis system.

13. To Attachment E, **TECHNICALS**, Section 40 91 12 Process Analyzer Measuring Systems, Part 2, Item 2.06, Total Organic Carbon, **Sub Item D**. Ammonia Gas Selective Electrode (GSE) Analysis System (for Blending Tank), page 895, **DELETE** in its entirety, and **SUBSTITUTE** with the following:

    D. General: Analysis systems shall be furnished complete with a one year supply of active/inactive reagents (e.g., acid and oxidizer), replacement UV lamps, spare compressor (if applicable) and maintenance / cleaning kit. Refer to Section 40 91 00 Appendices for the complete instrument schedule.

14. To Attachment E, **TECHNICALS**, Section 43 05 21 Common Motor Requirements for Equipment, Part 1 General, Item 1.07 QUALITY ASSURANCE, **Sub Item C,** page 1062, **DELETE** in its entirety, and **SUBSTITUTE** the following:

    C. Test report shall be certified by the motor manufacturer's test personnel and submitted to the Engineer.

        1. For motors larger than 100 horsepower, test and submit results for the following:

            a. Routine tests per NEMA MG1 and IEEE 112.

            b. Provide tests as noted in paragraph 1.07 Factory Testing.

            c. Test report shall be certified by the motor manufacturer's test personnel and submitted to the Engineer.

            d. For motors larger than 200 horsepower, efficiency and power factor by Test Method B, IEEE 112. Submit Form B and B-2.

15. To Attachment E, **TECHNICALS**, Section 43 23 03 General Requirements for Centrifugal Pumps, Part 3 Execution, Item 3.04 Alignment, **Sub Item A**, page 1108, **DELETE** in its entirety, and **SUBSTITUTE** with the following:

    A. Ensure that journeymen millwrights perform alignment of equipment furnished under this section and any referencing section. Carpenters, laborers, or any other trades are specifically excluded from performing this work. In locations where such trades are not available, have the Contractor retain the services of a firm specializing in this type of work to perform the setting and alignment work. Have the Subcontractor submit the qualifications of the proposed firm to the Engineer for acceptance prior to performing the work. Ensure that the Engineer personally witnesses final alignment procedures for each item of equipment as a condition precedent to beginning any work required under Division 01. Ensure that alignment techniques conform to the requirements of Section 43 05 14.

16. To Attachment E, **TECHNICALS**, Section 43 23 89.13 Horizontal, Variable Speed, End Suction, Centrifugal Pumps, Part 2, Products, Item 2.03 Performance/Design Criteria**,** Sub Item **D Design Requirements,** pages 1148 to 1149, **DELETE** in its entirety, and **SUBSTITUTE** with the following:

D. Design Requirements

Item	Value				
Equipment number	P-360	P-440	P-824	P-1065	P-1085
Pump	BNR Feed Pump	IMLR	MF Transfer Pump	RO CIP	RO Flush
Minimum efficiency at best efficiency point (BEP) at maximum speed, percent[a]	63	78	74.99	51.7	51.7
	Piping connection size, inches, minimum:				
Pump inlet	3	6	3	2	2
Pump discharge	2	4	2.5	1.5	1.5
Operating speed, rpm, maximum	3,500	900	1765	3,600	3,600
Operating speed, constant or variable	Variable	Variable	Variable	Variable	Variable
Approximate pump suction centerline elevation, feet, NAVD 88	118	122.75	121	121	121
Motor (See Section 43 05 21)					
Horsepower	5	7.5	1	7.5	7.5
Type	See Section 43 05 21	See Section 43 05 21	TEFC	TEFC	TEFC
Inverter duty	Yes	Yes	Yes	Yes	Yes
Space heater	No	No	No	No	No
Thermal protection	Yes	Yes	Yes	Yes	Yes
Temperature sensors	See Section 43 05 21	See Section 43 05 21			
Ambient duty rating	+40°C	+40°C	+40°C	+40°C	+40°C
Voltage rating	460 volt, 3 Phase	460 volt, 3 Phase	460 volt, 3 Phase	460 volt, 3 Phase	460 volt, 3 Phase
Hazardous rating	None	None	None	None	None
Reversing motor	No	No	No	No	No
Multispeed motor	Yes	Yes	Yes	Yes	Yes

Motor starting type	Variable speed drive	Variable speed drive	Variable speed drive	Variable speed drive	Variable speed drive
ANSI	Yes	Yes	ASME 125 Flange	ASME 125 Flange	ASME 125 Flange
Mount	Frame	Frame	Close Coupled	Close Coupled	Close Coupled

Note:

a The minimum acceptable efficiency at BEP at the speed required to achieve the performance specified under Condition Points A and B. The minimum acceptable efficiency is not necessarily required to be associated with any operating condition specified in paragraph 2.03.B Operating Conditions.

17. To Attachment E, **TECHNICALS**, Section 43 24 41 Positive Displacement Rotary Lobe Pumps, Part 2 Products, Item 2.03 Performance/Design Criteria, Subitems **C Performance Requirements** and **D Design Requirements,** pages 1160 to 1161, **DELETE** in their entirety, and **SUBSTITUTE** with the following:

C. Performance Requirements:

Operating Condition	**Value**	**Value**
Equipment	P-570	P-430
Rated operating condition		
Capacity, gpm	168	1040
Total head, psi	41	-6.00

D. Design Requirements:

Item	Value	Value
Equipment number	P-570	P-430
Pump		
Drive type	Closed-coupled block (Type B)	Closed-coupled block (Type B)
Piping connection size, inches		
Pump suction	4	8
Pump discharge	4	8
Operating speed at rated capacity, rpm, maximum	275	275
Operating speed, rpm, maximum	300	300

Item	Value	Value
Equipment number	P-570	P-430
Variable frequency drive (VFD)	Yes	Yes
Motor (See Section 43 05 21)		
Horsepower, maximum	10	10
Type (See Section 43 05 21)		
Inverter duty	Yes	Yes
Space heater	No	No
Thermal protection	Yes	Yes
Ambient duty rating	+40	+40
Operating speed, rpm, maximum	500	500
Voltage rating	460-volt, 3 Phase	460-volt, 3 Phase
Hazardous rating	None	None
Reversing motor	No	No
Multispeed motor	Yes	Yes
Motor starting type	VFD, coordinate for proper starting of driven equipment.	VFD, coordinate for proper starting of driven equipment.

18. To Attachment E, **TECHNICALS**, Section 43 24 41 Positive Displacement Rotary Lobe Pumps, THIS PAGE INTENTIONALLY LEFT BLANK, page 1166 **DELETE** in its entirety.

19. To Attachment E, **TECHNICALS**, Section 43 41 48 Polyethylene Tanks, Part 1 General, Item 1.01 Description**,** Subitems **C. Equipment List** and **D. Performance and Design Requirements**, Pages 1179 to 1182, **DELETE** in their entirety, and **SUBSTITUTE** with the following:

    C. Equipment List:

Item	Equipment Number
Sodium Hypochlorite Storage Tank	TNK-1400
Ammonium Sulfate Storage Tank	TNK-1320
Sodium Hydroxide Storage Tank	TNK-1600
Citric Acid Storage Tank	TNK-1540
Sodium Bisulfite Storage Tank	TNK-1500
Acetic Acid Storage Tank	TNK-1300
Blended Water Storage Tank	TNK-340
MBR Filtrate Tank No 1	TNK-550

Item	Equipment Number
MBR Filtrate Tank No 2	TNK-560
Pathogen Test Tank No 1	TNK-610
Pathogen Test Tank No 2	TNK-620
O3 Product Tank	TNK-740
BAC Filtrate Tank	TNK-820
BAC Filtrate Overflow Tank	TNK-830
BAC Backwash Supply Tank	TNK-850
RO Feed Tank	TNK-900
CCRO Permeate Tank	TNK-1030
RO CIP Tank	TNK-1060
RO Flush Tank	TNK-1075
PFC Carrier Water Tank	TNK-1200
Sulfuric Acid Storage Tank	TNK-1440

D. Performance and Design Requirements

1. The tank furnished under this section shall have the following characteristics and the detail specification of each tank is listed at the end of this specification section.

Equipment Number(s):	TNK-1400	TNK-1320	TNK-1600	TNK-1540	TNK-1500	TNK-1300	TNK-340
Physical Characteristic	Vertical, Cylindrical	Vertical, Cylindrical	Vertical, Cylindrical	Vertical, Cylindrical	Vertical, Cylindrical	Vertical, Cylindrical	Vertical, Cylindrical
Tank Material	HDPE or XLPE with internal oxidation resistant coating	XLPE	XLPE	XLPE	XLPE	XLPE	HDPE
Fitting Material	PVC	PVC	PVC	PVC	PVC	PVC or PP	PVC
Gasket Material	Viton	EPDM	EPDM	EPDM	EPDM	EPDM	EPDM
Bolt Material	Titanium	316SS, Hastelloy c-276, or Titanium	316SS	316SS	316SS	316SS	316SS
Nominal capacity, gallons	750	160	1550	105	105	1,000	6,600
Inside diameter, feet	4’-6”	2’ 7 ¾”	7’-2”	2’-7 ¾”	2’-7 ¾”	5’-9 ½”	10’
Straight shell height	6’-7”	4’-3”	5’-4 ½”	2’-10 ½”	2’-10 ½”	5’-3”	11’-6”

Equipment Number(s):	TNK-1400	TNK-1320	TNK-1600	TNK-1540	TNK-1500	TNK-1300	TNK-340
Access hatches, number	1	1	1	1	1	1	1
Black Tank	No	No	No	No	No	No	No
Fluid	12.5% Sodium Hypochlorite	40% Liquid Ammonium Sulfate	25% Sodium Hydroxide	50% Citric Acid	38% Sodium Bisulfite	56% Acetic Acid	Screened, and degritted sewage
Design specific gravity	1.05	1.22	1.28	1.24	1.14	1.25	1
Double Wall Containment	Yes	Yes	Yes	Yes	Yes	Yes	No
Safety Ladder	No	No	No	No	No	No	Yes

Equipment Number(s):	TNK-550	TNK-560	TNK-610	TNK-620	TNK-740	TNK-820	TNK-830
Physical Characteristic	Vertical, Cylindrical	Vertical, Cylindrical	Vertical, Cylindrical	Vertical, Cylindrical	Vertical, Cylindrical	Vertical, Cylindrical	Vertical, Cylindrical
Tank Material	HDPE	HDPE	HDPE	HDPE	HDPE	HDPE	HDPE
Fitting Material	PVC	PVC	PVC	PVC	PVC	PVC	PVC
Gasket Material	EPDM	EPDM	EPDM	EPDM	Viton	EPDM	EPDM
Bolt Material	316SS	316SS	316SS	316SS	316SS	316SS	316SS
Nominal capacity, gallons	12,500	12,500	3,500	1,000	1,000	2,000	1,000
Inside diameter, feet	11’ 10”	11’ 10”	7’ 6”	5’ 0”	6’	7’-6”	6’
Straight shell height	14’ 1”	14’ 1”	11’ 0”	7’ 3”	5’-5”	6’-9”	5’-5”
Access hatches, number	1	1	1	1	1	1	1
Black Tank	Yes	Yes	Yes	Yes	Yes	Yes	Yes
Fluid	MBR Filtrate	MBR Filtrate	MBR Filtrate	MBR Filtrate	O3 product	BAC Filtrate	BAC Filtrate
Design specific gravity	1	1	1	1	1	1	1
Double Wall Containment	No	No	No	No	No	No	No

Equipment Number(s):	TNK-850	TNK-900	TNK-1030	TNK-1060	TNK-1075	TNK-1200	TNK-1200
Physical Characteristic	Vertical, Cylindrical	Vertical, Cylindrical	Vertical, Cylindrical	Vertical, Cylindrical	Vertical, Cylindrical	Vertical, Cylindrical	Vertical, Cylindrical

Equipment Number(s):	TNK-850	TNK-900	TNK-1030	TNK-1060	TNK-1075	TNK-1200	TNK-1200
Tank Material	HDPE	HDPE	HDPE	HDPE	HDPE	HDPE	HDPE or XLPE with internal oxidation resistant coating
Fitting Material	PVC	PVC	PVC	PVC	PVC	PVC	CPVC or PVDF
Gasket Material	EPDM	EPDM	EPDM	EPDM	EPDM	EPDM	Viton
Bolt Material	316SS	316SS	316SS	316SS	316SS	316SS	Hastelloy C-276
Nominal capacity, gallons	6,000	2,500	500	500	1,500	55	405
Inside diameter, feet	8'-6"	7'-6"	4'	4'	6'	2'	3'-8"'
Straight shell height	12'-8"	8'-6"	6'	7'	7'-8"	2'-11"	5'-2"
Access hatches, number	1	1	1	1	1	1	1
Black Tank	Yes	Yes	Yes	No	Yes	Yes	No
Fluid	BAC Filtrate	MF Filtrate	RO Permeate	RO Permeate with 2% Citric Acid or 0.1% Sodium Hydroxide	RO Permeate	RO Permeate	93% Sulfuric Acid
Design specific gravity	1	1	1	1	1	1	1.84
Double Wall Containment	No	No	No	No	No	No	Yes

20. To Attachment E, **TECHNICALS**, Section 46 33 42.16 Hydraulically Driven Diaphragm Pumps, Part 1 General, Item 1.01, Description, Subitems **A. Scope** and **B. Type,** page 1245, **DELETE** in Its entirety, And **SUBSTITUTE** with the following:

    A. Scope: The section specifies positive displacement, hydraulically actuated, diaphragm metering pumps and associated appurtenances for chemical feed service in water and wastewater treatment applications. The pumps shall be supplied by the Contractor.

    B. Type: Metering pumps shall be of the positive displacement, hydraulically actuated diaphragm type. Pumps shall operate at variable stroke lengths from 0 - 100% with automatic, electronic adjustment. Pump output shall be rated at design operating temperature and be adjustable while the pump is operating.

Pumps shall be simplex (single pump head) design. The Contractor shall furnish and install complete chemical metering systems with associated pump supports, controls, appurtenances and miscellaneous equipment to provide an operating installation as shown or otherwise specified. The Contractor shall coordinate with the Reverse Osmosis Equipment Manufacturer (Section 46 63 23.01), Closed Circuit Reverse Osmosis Equipment Manufacturer (Section 46 63 23.02), and Flow Reversal Reverse Osmosis Equipment Manufacturer (Section 46 63 23.03) to interface the chemical metering pumps with the reverse osmosis systems. The pump shall be suitable for the intended metering service with adjustable speed controls as required to provide the degree of dosing control described herein. Metering pumps shall be fully waterproof and suitable for installation outdoors or in wet processing areas.

21. To Attachment E, **TECHNICALS**, Section 46 61 33 Membrane Bioreactor System, Part 1 General, Item 1.01 General Requirements, **Sub Item D. Table,** page 1321, **DELETE** in its entirety, and **SUBSTITUTE** with the following:

Stream	**Flow Rate (gpm)**
Total Net Filtrate[1]	189
Total Influent to Bioreactor Tanks[2]	208
Average WAS Flow Rate[3]	7
Maximum ML Flow to Membrane Tanks	1040

22. To Attachment E, **TECHNICALS**, Section 46 61 33 Membrane Bioreactor System, Part 2 Products, Item 2.03 Filtrate Pump Skid, **Sub Item B,** page 1328, **DELETE** in its entirety, and **SUBSTITUTE** with the following:

    B. Pump and motor requirements are as listed below. Comply with the general requirements of Section. 43 24 41 POSITIVE DISPLACEMENT ROTARY LOBE PUMPS.

        1. Pump shall be a reversible, positive-displacement rotary lobe pump.

        2. Motor shall be 480 volt, 3 phase, and shall be controlled by VFDs.

3. Pump shall operate at a minimum of 55% wire-to-water efficiency.

4. Pump shell, wear plates, and inlet/outlet flanges shall be Type 316 Stainless Steel. Rotor or lobe tips shall be provided with an EPDM or Buna-bonded covering.

5. Manufacturer's standard mechanical coupling with coupling guard shall be used.

6. Pump VFD shall be provided by the Contractor and housed within the electrical room trailer MCC.

23. To Attachment E, **TECHNICALS**, Section 46 61 33 Membrane Bioreactor System, Part 2 Products, Item 2.04 RAS Pump Skid, **Sub Item A,** page 1329, **DELETE** in its entirety, and **SUBSTITUTE** with the following:

A. The WWSS shall supply one skid-mounted RAS Pump. This pump shall be capable of drawing RAS from the bioreactor tanks for discharge into the associated membrane basin, with a total dynamic head of 8.5 psi.

1. Pump and motor requirements are as listed below. Refer to the requirements of Section 43 23 03 – GENERAL REQUIREMENTS FOR CENTRIFUGAL PUMPS

2. Pump shall be centrifugal.

3. Motors shall be 480 volt, 3 phase, and shall be controlled by VFDs.

4. Pump shall operate at a minimum of 75% efficiency.

5. Pump shell, wear plates, and inlet/outlet flanges shall be Type 316 Stainless Steel. Material selection shall be suitable for RAS service.

6. Manufacturer's standard mechanical coupling with coupling guard shall be used.

7. Pump VFD shall be provided by the Contractor and housed within the electrical room trailer MCC.

24. To Attachment E, **TECHNICALS**, Section 46 61 36 Membrane Filtration, Part 1 General, Item 1.03 Requirements, **Sub Item D,** page 1340, **DELETE** in its entirety, and **SUBSTITUTE** with the following:

    D. The MFS equipment, piping, and skid frames shall be designed for outdoor use. All electrical and control panel enclosures shall be NEMA Type 4X. The MFS equipment will be located under a canopy.

25. To Attachment E, **TECHNICALS**, Section 46 61 36 Membrane Filtration, Part 2 Products, Item 2.02 Minimum Design Criteria**, Sub Item A,** page 1341, **DELETE** in its entirety, and **SUBSTITUTE** with the following:

    A. Major components of the MFS shall include, but not be limited to, the following:

        1. Membrane modules.
        2. Feed pumps.
        3. Automatic strainers.
        4. Automatic backwashing system, including backwash pump, that shall be plumbed for connection to central compressed air supply.
        5. Automatic maintenance clean system, including necessary solution mixing tanks, pumps, and controls.
        6. Automatic clean-in-place (CIP) system, including necessary solution mixing tanks, recirculation pumps, and controls.
        7. Process control system, including a master control panel and human-machine interface (HMI).
        8. Process instrumentation, including, but not limited to, pressure gauges, turbidimeters, and flow meters.
        9. Skid frame(s).

F. CLARIFICATIONS

1. Cover Sheet Drawing G-01 was updated to show drawings revised as part of this Addendum and to make a few changes as highlighted on the drawing.
2. Civil Drawings C-02 to C-05, C-11, and C-14 have been revised and are included in this Addendum to modify the 4" thick sidewalk between

Area 6 and Areas 7 & 8 to a 9" thick slab per Structural Drawings and to incorporate miscellaneous changes as part of development of a Stormwater Management Plan. Details are listed and included on the revised drawings.

3. Structural Drawings S-02, S-07, S-17 to S-21, S-26, S-34, and S-35 have been updated and included in this Addendum to clearly identify the construction loading limitations, modification of sidewalk between Area 6 and Areas 7 & 8 to a 9" thick slab, addition of grout below MBR Tank and Pre-Fabricated Electrical Equipment Enclosure. Details are listed in the respective drawings.

4. Mechanical Drawing M-24 was updated as part of development of a Stormwater Management Plan and included in this Addendum. Changes are listed on the drawing.

5. P&IDs I-51, I-52, and I-56 have been updated and included in this Addendum to revise pipe size, remove area segments, and valve location changes respectively.

G. PLANS

1. To Drawing numbers **0100179-1-D**, **0100179-11-D**, **0100179-23-D**, **0100179-24-D**, **0100179-25-D**, **0100179-26-D**, **0100179-32-D**, **0100179-35-D**, **0100179-37-D**, **0100179-42-D**, **0100179-52-D**, **0100179-53-D**, **0100179-54-D**, **0100179-55-D**, **0100179-56-D**, **0100179-61-D**, **0100179-69-D**, **01000179-70-D**, **0100179-76-D**, **0100179-83-D**, **0100179-86-D**, **0100179-87-D**, **0100179-89-D**, **0100179-90-D**, **0100179-98-D**, **0100179-185-D**, **0100179-194-D**, **0100179-195-D**, **0100179-199-D**, **0100179-204-D**, **0100179-206-D, 0100179-207-D**, and **0100179-211-D**, **DELETE** in their entirety and **REPLACE** with pages 40 through 72 of this Addendum.

Rania Amen, Director
Engineering & Capital Projects Department

Dated: *December 20, 2022*
San Diego, California

RA/AJ/na

CENTRAL AREA SMALL-SCALE FACILITY

CONTRACTOR'S RESPONSIBILITIES

1. PURSUANT TO SECTION 4216 OF THE GOVERNMENT CODE, AT LEAST 2 WORKING DAYS PRIOR TO EXCAVATION, YOU MUST CONTACT THE REGIONAL NOTIFICATION CENTER (E.G. UNDERGROUND SERVICE ALERT OF SOUTHERN CALIFORNIA) AND OBTAIN AN INQUIRY IDENTIFICATION NUMBER.
2. NOTIFY SDG&E AT LEAST 10 WORKING DAYS PRIOR TO EXCAVATING WITHIN 10' OF SDG&E UNDERGROUND HIGH VOLTAGE TRANSMISSION POWER LINES. (I.E., 69 KV & HIGHER)
3. STORM DRAIN INLETS SHALL REMAIN FUNCTIONAL AT ALL TIMES DURING CONSTRUCTION.
4. UNLESS OTHERWISE NOTED AS PREVIOUSLY POTHOLED (PH), ELEVATIONS SHOWN ON THE PROFILE FOR EXISTING UTILITIES ARE BASED ON A SEARCH OF THE AVAILABLE RECORD INFORMATION ONLY AND ARE SOLELY FOR THE CONTRACTOR'S CONVENIENCE. THE CITY DOES NOT GUARANTEE THAT IT HAS REVIEWED ALL AVAILABLE DATA. THE CONTRACTOR SHALL POTHOLE ALL EXISTING UTILITIES EITHER SHOWN ON THE PLANS OR MARKED IN THE FIELD IN ACCORDANCE WITH THE 2021 GREENBOOK AND WHITEBOOK SPECIFICATIONS SECTION 402-UTILITIES.
5. EXISTING UTILITY CROSSING AS SHOWN ON THE PLANS ARE APPROXIMATE AND ARE NOT REPRESENTATIVE OF ACTUAL LENGTH AND LOCATION OF CONFLICT AREAS.
6. IMPORTANT NOTICE: SECTION 4216 OF THE GOVERNMENT CODE REQUIRES A DIG ALERT IDENTIFICATION NUMBER TO BE ISSUED BEFORE A "PERMIT TO EXCAVATE" WILL BE VALID. FOR YOUR DIG ALERT I.D. NUMBER, CALL UNDERGROUND SERVICE ALERT, TOLL FREE 1-800-422-4133, TWO DAYS BEFORE YOU DIG.
7. CONTRACTOR SHALL IMPLEMENT AN EROSION AND SEDIMENT CONTROL PROGRAM DURING THE PROJECT GRADING AND/OR CONSTRUCTION ACTIVITIES. THE PROGRAM SHALL MEET ALL APPLICABLE REQUIREMENTS OF THE STATE WATER RESOURCE CONTROL BOARD AND THE CITY OF SAN DIEGO MUNICIPAL CODE AND STORM WATER STANDARDS MANUAL.
8. DEVIATIONS FROM THESE SIGNED PLANS WILL NOT BE ALLOWED UNLESS A CONSTRUCTION CHANGE IS APPROVED BY THE CITY ENGINEER OR THE CHANGE IS REQUIRED BY THE CITY INSPECTOR.
9. AS-BUILT DRAWING MUST BE SUBMITTED TO THE RESIDENT ENGINEER PRIOR TO ACCEPTANCE OF THIS PROJECT BY THE CITY OF SAN DIEGO.

CONSTRUCTION STORM WATER PROTECTION NOTES

1. TOTAL SITE DISTURBANCE AREA (ACRES) 0.66
   HYDROLOGIC UNIT & WATERSHED PUEBLO SAN DIEGO HU/SAN DIEGO BAY
   HYDROLOGIC SUBAREA NAME & NO. POINT LOMA WATERSHED NO. 908.10

   THE CONTRACTOR SHALL COMPLY WITH THE REQUIREMENTS OF THE
   - ☐ MINOR WPCP
     THE PROJECT IS SUBJECT TO MUNICIPAL SEPARATE STORM SEWER SYSTEM (MS4) PERMIT NO. R9-2013-0001 AS AMENDED BY R9-2015-0001 AND R9-2015-0100
   - ☒ WPCP
     THE PROJECT IS SUBJECT TO MUNICIPAL SEPARATE STORM SEWER SYSTEM (MS4) PERMIT NO. R9-2013-0001 AS AMENDED BY R9-2015-0001 AND R9-2015-0100
   - ☐ SWPPP
     THE PROJECT IS SUBJECT TO MUNICIPAL SEPARATE STORM SEWER SYSTEM (MS4) PERMIT NO. R9-2013-0001 AS AMENDED BY R9-2015-0001 AND R9-2015-0100 AND CONSTRUCTION GENERAL PERMIT (CGP) ORDER 2009-0009-DWQ AS AMENDED BY ORDER 2010-0014-DWQ AND 2012-0006-DWQ
     TRADITIONAL: RISK LEVEL 1☐ 2☐ 3☐
     LUP: RISK TYPE 1☐ 2☐ 3☐

   CONSTRUCTION SITE PRIORITY
   ☐ ASBS ☐ HIGH ☒ MEDIUM ☐ LOW

B

PERMANENT STORM WATER BMP CATEGORY:

- ☒ PRIORITY DEVELOPMENT PROJECT
- ☐ STANDARD DEVELOPMENT PROJECT
- ☐ PDP EXEMPT
- ☐ NOT SUBJECT TO PERMANENT STORM WATER REQUIRMENTS

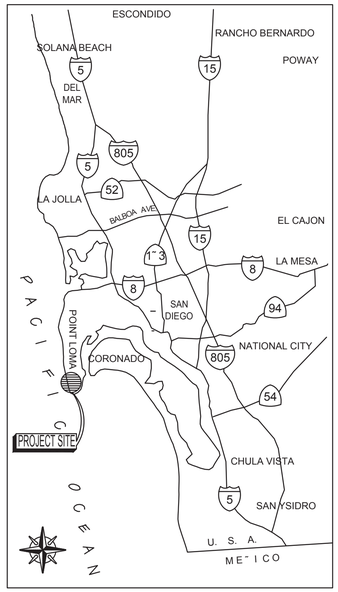

VICINITY MAP

DISCIPLINE CODE

- G GENERAL
- D DEMOLITION
- C CIVIL
- S STRUCTURAL
- M MECHANICAL
- E ELECTRICAL
- I INSTRUMENTATION

SHEET INDEX

FOR SHEET INDEX, SEE SHEET G-02

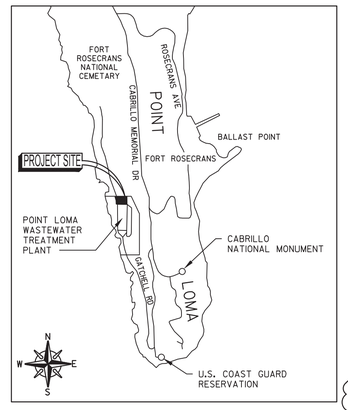

LOCATION MAP

FIELD DATA

BENCHMARK: SWBP CATALINA BLVD AND DUPONT RD

ELEV.= 302.365 MSL

FIELD NOTES:

BASIS OF BEARINGS / COORDINATES:

THE BASIS OF BEARINGS FOR THIS PROJECT WAS DERIVED FROM A PREVIOUS STATIC GPS SURVEY USING R.O.S. 14492 NAD 83 FEET, ZONE 6 (EPOCH 1991.35), UTILIZING RTK/GPS FIELD PROCEDURES WITH A SDSRN BASE STATION BROADCAST OF 2019.20 AND CONSTRAINING TO GPS 23, GPS 1119, GPS 1115 AND CHECKING GPS 1113 I.E. N 7 10'43" W

DATUM: MEAN SEA LEVEL BASED ON NGVD 29 FEET AS SHOWN IN THE CITY OF SAN DIEGO BENCH BOOK

REFERENCES: CITY OF SAN DIEGO SURVEY FIELD NOTES; LAPAGE, WO 192655,186-1692,7-19-1994 &0192331, 6-19-1995.

TOPOGRAPHY SOURCE: FROM AERIAL PHOTOGRAPHY

SOURCE OF SUPPLEMENTAL SURVEY:
O'DAY CONSULTANTS
2710 LAKER AVENUE WEST, SUITE 100
CARLSBAD, CA 92010
TEL: (760) 931 7700

STANDARD SPECIFICATIONS

STANDARD SPECIFICATIONS FOR PUBLIC WORKS CONSTRUCTION ("THE GREENBOOK") 2021 EDITION, INCLUDING THE CITY OF SAN DIEGO SUPPLEMENT ("THE WHITEBOOK" DOCUMENT ECP101010122-02) 2021 EDITION.

STANDARD DRAWINGS

CITY OF SAN DIEGO STANDARD DRAWINGS, DOCUMENT ECP101010122-03, 2021 EDITION.

LEGAL DESCRIPTION:

SAN BERNADINO MERIDIAN CALIFORNIA
T.17S, R.4W TRACT 38X

SITE ADDRESS

POINT LOMA WASTEWATER TREATMENT PLANT
1902 GATCHELL ROAD
SAN DIEGO, CALIFORNIA 92106

ASSESSOR'S NUMBER

532-520-06X

PROJECT DATA

NOTE: CASSF IS A SHORT TERM FACILITY TO DEMONSTRATE ADVANCED WATER TREATMENT PROCESSES. THERE IS NO BUILDING ON SITE. THE DETAILS BELOW ARE BASED ON THIS INPUT.

OCCUPANCY CLASSIFICATION(S): SEE DRAWING G-03
NUMBER OF STORIES (EXISTING & PROPOSED): N/A
HEIGHT OF BUILDING (EXISTING & PROPOSED): N/A
FLOOR AREA AND FLOOR AREA RATIO: N/A
TOTAL NEW FLOOR AREA ADDED: N/A
TOTAL EXISTING FLOOR AREA TO REMAIN PER STORY: N/A
CONDITION OF SOIL: COMPACT
LANDSCAPE AREA SQUARE FOOTAGE: NONE
TOTAL AREA OF DISTURBANCE: 22,150 SQ. FT.
LISTING OF DEFERRED SUBMITTALS: ANCHORAGE CALCULATIONS, SEE DRAWING S-02.
FIRE PROTECTION REQUIREMENTS: FIRE HYDRANT
APPLICABLE CODES: CBC 2019

OWNER

CITY OF SAN DIEGO
9192 TOPAZ WAY
SAN DIEGO CA. 92123 B
PHONE NUMBER 858-292-6479
PROJECT MANAGER NAME: JOSEPH QUICHO

~ ONING

CONSTRUCTION TYPE: CAST-IN-PLACE CONCRETE
BUILDING TYPE: NONE
DISCRETION APPROVALS: NONE
BUILDING CODE YEAR: 2019
EXISTING USE OF BUILDING: NONE (NO BUILDINGS)
PROPOSED USE OF BUILDING: NONE (NO BUILDINGS)

PROJECT TEAM

BROWN AND CALDWELL	858-514-8822
STANTEC	858-751-1214
TRUSSELL TECHNOLOGIES	858-458-1030
WEST COAST CIVIL	858-869-1332
MARTIN AND LIBBY STRUCTURAL ENGINEERS	619-280-9307
ALLIED GEOTECHNICAL ENGINEERS, INC.	619-449-5900
SAN DIEGUITO ENGINEERING, INC.	858-345-1149
TSAC ENGINEERING	858-762-9611

WORK TO BE DONE "SCOPE OF WORK"

A. THE WORK CONSISTS OF PROVIDING A NEW WATER PURIFICATION DEMONSTRATION FACILITY NAMED "CENTRAL AREA SMALL-SCALE FACILITY" INCLUDING, BUT NOT LIMITED TO, PROCESSES, SUPPORT SYSTEMS, AND SITE WORK AS LISTED BELOW:

1. PROCESS FACILITIES INCLUDING:
   a. PRIMARY INFLUENT AND PRIMARY EFFLUENT FEED PUMPS
   b. BLEND TANK
   c. BIOLOGICAL NUTRIENT REMOVAL (BNR) SYSTEM
   d. MEMBRANE BIO REACTOR (MBR) SYSTEM
   e. OZONE TREATMENT
   f. BIOLOGICAL ACTIVATED CARBON FILTRATION
   g. MEMBRANE FILTRATION
   h. REVERSE OSMOSIS
   i. ULTRAVIOLET / ADVANCED OXIDATION PROCESS
2. SUPPORT SYSTEMS INCLUDING:
   a. CHEMICAL STORAGE AND DELIVERY SYSTEMS
   b. ELECTRICAL AND CONTROL
3. PERFORM SITE WORK INCLUDING, BUT NOT LIMITED TO, GRADING, NEW PAVEMENT AND YARD PIPING.

B

B. STRUCTURAL SCOPE:

1. STRUCTURES INCLUDE 2 ELEVATED STRUCTURAL SLABS ON PILE FOUNDATIONS (6,577 SQ. FT.) AND 3 MAT SLABS-ON-GROUND (3,443 SQ. FT.). ONE MAT SLAB WILL BE MODIFIED BY REMOVING (E) EQUIPMENT PADS, INFILLING A TRENCH AND ADDING TOPPING (1,860 SQ. FT.). NINETY SEVEN PIECES OF EQUIPMENT WILL BE ANCHORED AS WELL AS ONE 480 SQ. FT. PREMANUFACTURED ELECTRICAL TRAILER AND FOUR PREMANUFACTURED CLOTH CANOPIES TOTALING 2,362 SQ. FT. THERE ARE RETAINING WALLS TOTALING 134 LF FOR 3'-6" AND UNDER, 88 LF FOR 5'-6" AND UNDER AND 197 LF FOR 7'-6" AND UNDER.

C. DEFERRED APPROVALS

B
1. (1) PREMANUFACTURED ELECTRICAL ENCLOSURE INCLUDING HVAC
2. (4) PREMANUFATURED CLOTH CANOPIES

MONUMENTATION SURVEY NOTES

THIS MAP WAS CREATED FROM A PARCEL LAYER AND DOES NOT DEPICT THE ACTUAL LOCATION OF THE PROPERTY LINES. NO BOUNDARY ANALYSIS WAS PERFORMED. THE SURVEY MONUMENTS HAVE BEEN LOCATED BY SURVEY GRADE MEASUREMENTS, AND ARE SHOWN FOR INFORMATIONAL PURPOSES ONLY.

THE CITY OF SAN DIEGO LAND SURVEYORS SHALL REPLACE SUCH MONUMENTS WITH APPROPRIATE MONUMENTS. WHEN SETTING SURVEY MONUMENTS USED FOR RE-ESTABLISHMENT OF THE DISTURBED CONTROLLING SURVEY MONUMENTS AS REQUIRED BY SECTIONS 6730.2 AND 8771 OF THE BUSINESS AND PROFESSIONS CODE OF THE STATE OF CALIFORNIA, A CORNER RECORD OR RECORD OF SURVEY, AS APPROPRIATE, SHALL BE FILED WITH THE COUNTY SURVEYOR.

IF ANY HORIZONTAL OR VERTICAL CONTROL IS TO BE DISTURBED OR DESTROYED, THE CITY OF SAN DIEGO FIELD SURVEY SECTION SHALL BE NOTIFIED IN WRITING AT LEAST 7 DAYS PRIOR TO CONSTRUCTION. THE CONTRACTOR SHALL BE RESPONSIBLE FOR THE COST OF REPLACING ANY HORIZONTAL CONTROL AND VERTICAL CONTROL BENCHMARKS DESTROYED BY THE CONSTRUCTION IF THE CITY OF SAN DIEGO SURVEY SECTION IS NOT NOTIFIED PRIOR TO CONSTRUCTION. THE FILING OF A CORNER RECORD OR RECORD OF SURVEY, AS APPROPRIATE SHALL BE FILED WITH COUNTY SURVEYOR. A COPY OF THE FILED DOCUMENT SHALL BE FURNISHED TO THE CITY OF SAN DIEGO SURVEY SECTION.

DECLARATION OF RESPONSIBLE CHARGE

I HEREBY DECLARE THAT I AM THE ENGINEER OF WORK FOR THIS PROJECT THAT I HAVE EXERCISED RESPONSIBLE CHARGE OVER THE DESIGN OF THE PROJECT AS DEFINED IN SECTION 6703 OF THE BUSINESS AND PROFESSIONS CODE AND THAT THE DESIGN IS CONSISTENT WITH CURRENT STANDARDS. I UNDERSTAND THAT THE CHECK OF PROJECT DRAWINGS AND SPECIFICATIONS BY THE CITY OF SAN DIEGO IS CONFINED TO A REVIEW ONLY AND DOES NOT RELIEVE ME, AS ENGINEER OF WORK, OF MY RESPONSIBILITIES FOR PROJECT DESIGN.

MADHAVAN JAYAKUMAR — R.C.E. NO. M34495 — DATE OF SIGNING 08/29/22

G-01

CENTRAL AREA SMALL-SCALE FACILITY

PLANS FOR THE CONSTRUCTION OF CENTRAL AREA SMALL-SCALE FACILITY COVER SHEET

CONSTRUCTION CHANGE / ADDENDUM

CHANGE	DATE	AFFECTED OR ADDED SHEET NUMBERS	APPROVAL NO.
B	12-8-22	G-01, G-11, C-02, C-03, C-04, C-05, C-11, C-14, S-02, S-07, S-17, S-18, S-19, S-20, S-21, S-26, S-34, S-35, M-02, M-09, M-12, M-13, M-15, M-16, M-24, I-30, I-51, I-52, I-56, I-74, I-81, I-82, I-86	

WARNING
0 1"
IF THIS BAR DOES NOT MEASURE 1" THEN DRAWING IS NOT TO SCALE.

The City of SAN DIEGO

CONSULTANTS
Stantec
Brown AND Caldwell
Trussell TECHNOLOGIES INC

SPEC. NO. 2119
REGISTERED PROFESSIONAL ENGINEER — MADHAVAN K JAYAKUMAR — NO. M34495 — MECHANICAL — STATE OF CALIFORNIA
12/09/22

CITY OF SAN DIEGO, CALIFORNIA
ENGINEERING AND CAPITAL PROJECTS DEPARTMENT
SHEET 1 OF 264 SHEETS

APPROVED: FOR CITY ENGINEER ALICE ALTES — DATE 10/13/2022 — RCE# C68286
PRINT DCE NAME

DESCRIPTION	BY	APPROVED	DATE	FILMED
ORIGINAL	BC		10/22	
B ADDENDUM B	BC		12/22	

WBS B-21151
SUBMITTED BY: JOSEPH QUICHO, PROJECT MANAGER
CHECKED BY: MICHAEL VIOLANTE, PROJECT ENGINEER
SEE EACH SHEET CCS27 COORDINATE
SEE EACH SHEET CCS83 COORDINATE
DRAWING NO. 0100179-1-D — CS01

CONTRACTOR
INSPECTOR
NTP DATE
NOC DATE

FILENAME: CASSF-G-01.DWG

B UPDATE HYDRAULIC SUBAREA NAME, CHANGE THE CONSTRUCTION SITE PRIORITY FROM HIGH TO MEDIUM, CORRECT OWNER'S ADDRESS, REVISE NOTES B AND C

ADDENDUM B

PRIMARY EFFLUENT PUMP STATION		
DESCRIPTION	UNITS	DESIGN
NUMBER OF PUMPS	NO.	1 (1 DUTY, 0 STANDBY)
TYPE	-	HORIZONTAL SELF-PRIMING CENTRIFUGAL
RATED CAPACITY, EACH	GPM	208
RATED HEAD	FT	90
MOTOR SIZE	HP	10
DRIVE	-	CONSTANT SPEED

PRIMARY INFLUENT PUMP STATION		
DESCRIPTION	UNITS	DESIGN
PRIMARY INFLUENT PUMP		
NUMBER OF PUMPS	NO.	1 (1 DUTY, 0 STANDBY)
TYPE	-	HORIZONTAL SELF-PRIMING CENTRIFUGAL
RATED CAPACITY, EACH	GPM	80
RATED HEAD	FT	95
MOTOR SIZE	HP	8
DRIVE	-	CONSTANT SPEED
GRINDER		
QUANTITY OF GRINDER	NO.	1(1 DUTY, NO STANDBY)
TYPE	-	COMPACT TWIN SHAFT GRINDER
CUTTER PROFILE	IN	5/16
MAJOR MATERIALS OF CONSTRUCTION	-	DUCTILE IRON HOUSING WITH 4140 HEAT TREATED ALLOY STEEL CUTTER
MOTOR SIZE	HP	3
STRAINER		
QUANTITY OF SCREENS	NO.	1 (1 DUTY, NO STANDBY)
TYPE	-	AUTOMATIC STRAINER
PERFORATION SIZE (CIRCULAR OPENING)	MM	3
CAPACITY	GPM	80
DESIGN HEADLOSS ACROSS THE SCREENS	IN OF WC	0.75
MAJOR MATERIALS OF CONSTRUCTION	-	CAST IRON OR FABRICATED BODY WITH SS316 STRAINER ELEMENT
MOTOR SIZE	HP	0.25

BLENDING TANK		
DESCRIPTION	UNITS	DESIGN
BLENDING TANK		
NUMBER OF TANKS	NO.	1 (1 DUTY, NO STANDBY)
HYDRAULIC RETENTION TIME	MIN	30
TANK VOLUME	GAL	6,240
MIXING PUMP		
NUMBER OF PUMPS	NO.	1 (1 DUTY, NO STANDBY)
TYPE	-	HORIZONTAL CENTRIFUGAL
RATED CAPACITY, EACH	GPM	208
RATED HEAD	FT	6
MOTOR SIZE	HP	1.5
DRIVE	-	CONSTANT SPEED

BNR SYSTEM		
DESCRIPTION	UNITS	DESIGN
BNR FEED PUMP		
NUMBER OF PUMPS	NO.	1 (1 DUTY, 0 STANDBY)
TYPE	-	HORIZONTAL CENTRIFUGAL
RATED CAPACITY, EACH	GPM	208
RATED HEAD	FT	48
MOTOR SIZE	HP	5
DRIVE	-	VFD

BNR SYSTEM CONT.		
DESCRIPTION	UNITS	DESIGN
STRAINER		
QUANTITY OF SCREENS	NO.	2 (1 DUTY, 1 STANDBY)
TYPE	-	AUTOMATIC STRAINER
PERFORATION SIZE (CIRCULAR OPENING)	MM	2
CAPACITY	GPM	250
ADDITIONAL RAS FLOW	GPM	42
DESIGN HEADLOSS ACROSS THE SCREENS	IN OF WC	10
MAJOR MATERIALS OF CONSTRUCTION	-	CAST IRON OR FABRICATED BODY WITH SS316 STRAINER ELEMENT
MOTOR SIZE	HP	0.25
BNR SYSTEM		
BPE FEED FLOW	GPM	250
BOD LOADING, AVERAGE ANNUAL	LB/D	483
BOD LOADING, MAXIMUM MONTH	LB/D	535
TSS LOADING, AVERAGE ANNUAL	LB/D	333
TSS LOADING, MAXIMUM MONTH	LB/D	375
TKN LOADING, AVERAGE ANNUAL	LB/D AS N	165
TKN LOADING, MAXIMUM MONTH	LB/D AS N	187
TOTAL SOLIDS RETENTION TIME	DAYS	10
WASTE SLUDGE LOCATION, NORMAL OPERATION	-	INTERMITTENT SURFACE WASTING; FROM AERATION ZONE 2
WASTE SLUDGE FLOW	GPM	32

DEOXYGENATION TANK		
DESCRIPTION	UNITS	DESIGN
DEOXYGENATION TANK		
NUMBER OF TANKS / ZONES PER TANK	NO.	1 / 1
TANK VOLUME, EACH	GAL	7,500
MLSS	MG/L	10,000
HYDRAULIC RETENTION TIME	MIN	32 - 35

ANOXIC TANK		
DESCRIPTION	UNITS	DESIGN
ANOXIC TANKS		
NUMBER OF TANKS / ZONES PER TANK	NO.	1 / 2
PRIMARY EFFLUENT FLOW, EACH	GPM	208 - 250
TANK VOLUME, TOTAL	GAL	21,700
MLSS	MG/L	6,000
HYDRAULIC RETENTION TIME	MIN	94 - 104
ANOXIC MIXERS		
MIXER TYPE	-	TOP ENTERING
NUMBER OF MIXERS, PER TANK	NO.	2
MIXER POWER, PER TANK	HP	2.5

AERATION AEROBIC TANK		
DESCRIPTION	UNITS	DESIGN
AEROBIC TANK		
NUMBER OF TANKS / ZONES PER TANK	NO.	1 / 2
TANK VOLUME, EACH	GAL	47,200
MLSS	MG/L	6,000
HYDRAULIC RETENTION TIME	MIN	204 - 226
AIR SYSTEM		
BLOWER TYPE	-	HELICAL SCREW ROTARY POSITIVE DISPLACEMENT
NUMBER OF BLOWERS, TOTAL	NO.	2 (1 DUTY, 1 STANDBY)
BLOWER CAPACITY RANGE	SCFM	110 - 360
BLOWER POWER, EACH	HP	30
DIFFUSER TYPE	-	MEMBRANE DISC
DIFFUSER SIZE, EACH	INCH	9

AERATION AEROBIC TANK CONT.		
DESCRIPTION	UNITS	DESIGN
INTERNAL MIXED LIQUOR PUMPS		
NUMBER OF PUMPS	NO.	1 (1 DUTY, NO STANDBY)
TYPE	-	HORIZONTAL CENTRIFUGAL
RATED CAPACITY, EACH	GPM	833
RATED HEAD	FT	6.6
MOTOR SIZE	HP	7.5
DRIVE	-	VFD
MIXED LIQUOR PUMPS		
NUMBER OF PUMPS	NO.	1 (1 DUTY, NO STANDBY)
TYPE	-	ROTARY LOBE
RATED CAPACITY, EACH	GPM	1,040
RATED HEAD	FT	13.8
MOTOR SIZE	HP	10
DRIVE	-	0

MBR SYSTEM		
DESCRIPTION	UNITS	DESIGN
MEMBRANE SYSTEM		
NUMBER OF BASINS	NO.	1 (1 DUTY, NO STANDBY)
MEMBRANE TYPE	-	HOLLOW FIBER
TARGET MAXIMUM FLUX	GFD	14.7
MODULES PER BASIN	NO.	44-48 (VARIES BY VENDOR)
FILTRATE PUMPS		
NUMBER OF PUMPS	NO.	1 (1 DUTY, NO STANDBY)
TYPE	-	ROTARY LOBE
RATED CAPACITY, EACH	GPM	201
RATED HEAD	FT	36.9
MOTOR SIZE	HP	10
DRIVE	-	VFD
AIR SCOUR BLOWERS		
NUMBER OF BLOWERS	NO.	1 (1 DUTY, NO STANDBY)
TYPE	-	POSITIVE DISPLACEMENT
CAPACITY, EACH	SCFM	215
RATED PRESSURE	PSIG	8
MOTOR SIZE	HP	15
DRIVE	-	CONSTANT SPEED
COMPRESSED AIR SYSTEM		
NUMBER OF COMPRESSORS	NO.	1 (1 DUTY, NO STANDBY)
TYPE	-	ROTARY SCREW
CAPACITY, EACH	SCFM	82
RATED PRESSURE	PSIG	140
MOTOR SIZE	HP	20
RAS PUMPS		
NUMBER OF PUMPS	NO.	1 (1 DUTY, NO STANDBY)
TYPE	-	CENTRIFUGAL
RATED CAPACITY, EACH	GPM	832
RATED HEAD	FT	15
MOTOR SIZE	HP	7.5
DRIVE	-	VFD

MBR PATHOGEN TESTING SKID		
DESCRIPTION	UNITS	DESIGN
PATHOGEN TESTING TANK(S)	NO.	2
NUMBER OF TANKS	-	HDPE
TANK MATERIAL	GAL	3,500 AND 1,000
PATHOGEN TESTING PUMP(S)		
NUMBER OF PUMPS	NO.	2 (2 DUTY, NO STANDBY)
TYPE	-	HORIZONTAL CENTRIFUGAL
RATED CAPACITY		
PATHOGEN PUMP 1	GPM	2.75
PATHOGEN PUMP 2	GPM	0.55
RATED HEAD		
PATHOGEN PUMP 1	FT	150
PATHOGEN PUMP 2	FT	33
MOTOR SIZE		
PATHOGEN PUMP 1	HP	0.75
PATHOGEN PUMP 2	HP	0.08
DRIVE	-	CONSTANT SPEED

MBR FILTRATE TANK(S) AND PIPE LOOP		
DESCRIPTION	UNITS	DESIGN
MBR FILTRATE TANK(S)		
NUMBER OF TANKS	NO.	2 (2 DUTY, NO STANDBY)
TANK VOLUME, EACH	GAL	12,000
TANK VOLUME, TOTAL	GAL	24,000
HYDRAULIC RETENTION TIME, MIN	MIN	142
PIPE LOOP		
PIPE DIAMETER	INCHES	4
PIPE LENGTH (TOTAL)	FT	2,250
HYDRAULIC RETENTION TIME, PIPE LOOP	MIN	9
HYDRAULIC RETENTION TIME, TOTAL	MIN	151

PWF FEED PUMP		
DESCRIPTION	UNITS	DESIGN
NUMBER OF PUMPS	NO.	1 (1 DUTY, NO STANDBY)
TYPE	-	ROTARY LOBE
RATED CAPACITY, EACH	GPM	186
RATED HEAD	FT	95
MOTOR SIZE	HP	10
DRIVE	-	VFD

DESIGN CRITERIA - PROCESS 1

G-11

CENTRAL AREA SMALL-SCALE FACILITY
GENERAL

DESIGN CRITERIA - PROCESS 1

CITY OF SAN DIEGO, CALIFORNIA
ENGINEERING AND CAPITAL PROJECTS DEPARTMENT
SHEET 11 OF 264 SHEETS

WBS B-21151

CONSULTANT

Stantec
Brown AND Caldwell
Trussell TECHNOLOGIES INC

REGISTERED PROFESSIONAL ENGINEER
JAMES K. JAYNES
NO. M34495
MECHANICAL
STATE OF CALIFORNIA
12/09/22

APPROVED: FOR CITY ENGINEER — DATE 10/13/2022
ALICE ALTES — PRINT DCE NAME — RCE# C68286

SUBMITTED BY: JOSEPH QUICHO, PROJECT MANAGER
CHECKED BY: MICHAEL VIOLANTE, PROJECT ENGINEER

DESCRIPTION	BY	APPROVED	DATE	FILMED
ORIGINAL			10/22	
1 ADDENDUM B			12/22	

CCS27 COORDINATE
CCS83 COORDINATE
DRAWING NO. 0100179-11-D
B10

CONTRACTOR
INSPECTOR
NTP DATE
NOC DATE

1 REVISED CAPACITY OF ML PUMP AND HEAD OF PWF FEED PUMP

ADDENDUM B

FILENAME: CASSF-G-11-13.DWG

December 20, 2022
Pure Water Program (PWP) Central Area Small Scale Facility

CASSF SITE PLAN

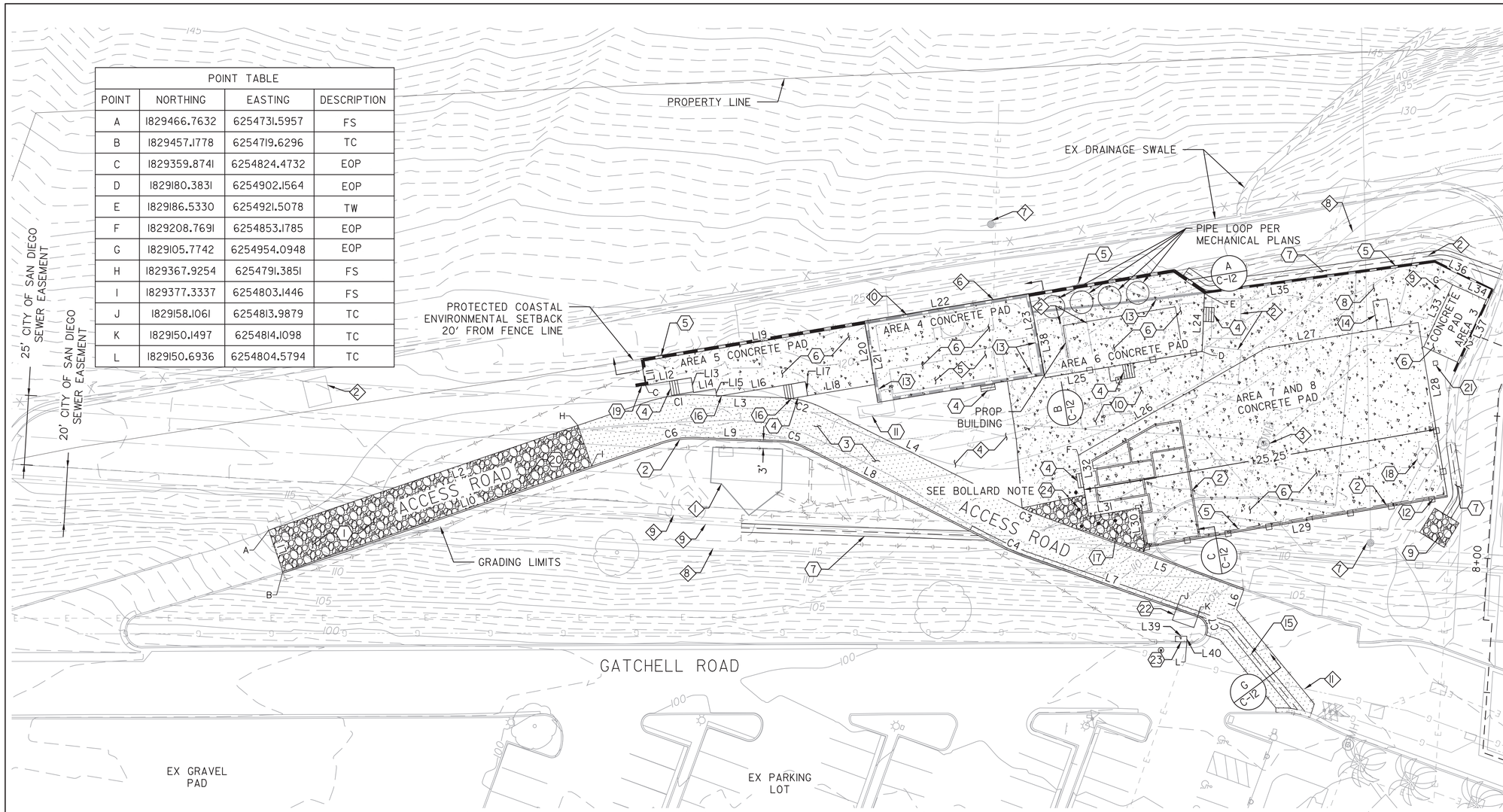

POINT TABLE			
POINT	NORTHING	EASTING	DESCRIPTION
A	1829466.7632	6254731.5957	FS
B	1829457.1778	6254719.6296	TC
C	1829359.8741	6254824.4732	EOP
D	1829180.3831	6254902.1564	EOP
E	1829186.5330	6254921.5078	TW
F	1829208.7691	6254853.1785	EOP
G	1829105.7742	6254954.0948	EOP
H	1829367.9254	6254791.3851	FS
I	1829377.3337	6254803.1446	FS
J	1829158.1061	6254813.9879	TC
K	1829150.1497	6254814.1098	TC
L	1829150.6936	6254804.5794	TC

KEY NOTES

1. DEMOLISH EXISTING ACCESS ROAD, GRADE PER SHEET C-04 & C-05 (B)
2. INSTALL NEW 6" CURB PER SDG-150
3. INSTALL NEW ASPHALT DRIVE PER DETAIL 2, SHEET C-12. CONTRACTOR TO FIELD VERIFY THE R-VALUE
4. INSTALL NEW CONCRETE STAIRCASE PER DETAIL 5, SHEET S-04
5. INSTALL NEW RETAINING WALL PER STRUCTURAL PLANS
6. SEE STRUCTURAL PLANS FOR SLAB THICKNESS AND PILE LOCATIONS
7. INSTALL NEW SWALE PER SDD-106 (B)
8. INSTALL NEW SIDEWALK PER SHEET S-07
9. INSTALL 1/4 TON, 2.70' THICK, 10' X 10' TYPE II ENERGY DISSIPATOR PER SDSD SDD-104 WITH A 1' FILTER BLANKET LAYER CONSISTING OF 6" LAYER OF 3/4" ROCK AND 6" LAYER OF SAND
10. SAWCUT AND REMOVE EX CONCRETE AS NECESSARY
11. DEMOLISH EX STAIRCASE
12. INSTALL NEW GUARDRAIL PER SHEET S-06
13. DEMOLISH EX WALL
14. INSTALL NEW CONCRETE RAMP PER DETAILS 1 & 2, SHEET S-26
15. INSTALL NEW 3' RIBBON PER SECTION G, SHEET C-12
16. INSTALL NEW REFLECTIVE DIAMONDS
17. INSTALL NO. 2 BACKING GRAVEL, T=15"
18. RELOCATE EX LANDSCAPE FEATURE. FIELD LOCATE PER DIRECTION OF THE CITY
19. INSTALL HEADWALL PER DETAIL 4, SHEET C-12
20. INSTALL NEW GRAVEL DRIVE PER DETAIL 5, SHEET C-12
21. INSTALL NEW 18" X 18" ONE-PIECE TAPERED CATCH BASIN, MODEL OR APPROVED EQUAL
22. INSTALL NEW 4' X 8' X 14' PUMP STATION PER DETAIL C, SHEET M-24
23. INSTALL NEW 2' x 4' CONCRETE PAD AREA PER DETAIL A, SHEET S-34
24. BOLLARD PER SDSD WM-04, TYP. OF 5

CURVE TABLE		
CURVE #	LENGTH	RADIUS
C1	20.00	50.00
C2	15.40	35.00
C3	5.72	50.00
C4	7.43	65.00
C5	8.85	20.00
C6	14.27	35.01
C7	8.11	5.03

LINE TABLE		
LINE #	LENGTH	BEARING
L1	15.32	S51° 18' 12.28"W
L2	139.71	S38° 39' 54.75"E
L3	27.76	S18° 02' 29.70"E
L4	77.91	S06° 44' 15.44"W
L5	77.22	S00° 08' 50.56"W
L6	7.32	S89° 52' 48.69"E
L7	65.60	S00° 49' 12.91"E
L8	77.91	S06° 44' 15.44"W
L9	28.14	S18° 02' 29.70"E
L10	139.73	S38° 47' 52.72"E
L11	8.46	S60° 34' 02.99"W
L12	16.26	S29° 16' 27.84"E
L13	5.25	S60° 56' 48.16"W
L14	7.75	S29° 25' 56.99"E

LINE TABLE		
LINE #	LENGTH	BEARING
L15	2.75	S60° 57' 48.28"W
L16	31.50	S29° 25' 57.01"E
L17	5.00	S61° 29' 51.66"W
L18	23.99	S29° 25' 59.01"E
L19	79.50	S29° 25' 57.01"E
L20	21.50	S60° 59' 27.08"W
L21	28.87	S60° 51' 12.46"W
L22	58.33	S29° 25' 57.01"E
L23	29.05	S59° 06' 44.52"W
L24	20.28	S72° 29' 07.26"W
L25	55.80	S29° 25' 57.08"E
L26	75.88	S49° 38' 20.11"E
L27	54.04	S29° 25' 57.00"E
L28	62.01	S60° 34' 03.00"W

LINE TABLE		
LINE #	LENGTH	BEARING
L29	107.42	S29° 25' 33.76"E
L30	14.00	S60° 34' 03.00"W
L31	17.83	S29° 25' 57.00"E
L32	21.79	S60° 34' 03.00"W
L33	24.00	S85° 04' 23.39"E
L34	13.00	S04° 37' 41.37"W
L35	81.50	S27° 37' 51.52"E
L36	21.93	S06° 19' 21.64"W
L37	31.18	S85° 04' 23.39"E
L38	30.01	S58° 55' 09.19"W
L39	4.00	S19° 32' 55.56"E
L40	2.00	S70° 27' 04.44"W

PROTECTION NOTES

1. PROTECT IN PLACE EXISTING INTERCEPTOR VAULT
2. EXISTING STORAGE CONTAINERS TO BE RELOCATED BY CITY
3. PROTECT IN PLACE EX MANHOLE
4. CONTRACTOR TO CLEAR AND GRUB TO LIMITS OF GRADING AS NECESSARY
5. EXISTING BAF PAD EQUIPMENT TO BE RELOCATED BY CITY
6. PROTECT IN PLACE EX WALL
7. PROTECT IN PLACE EX POWER POLE
8. PROTECT IN PLACE EX INTERCEPTOR
9. PROTECT IN PLACE EX SLUDGE LINE
10. PROTECT IN PLACE EX WATER LINE, SEE SHEET D-01
11. PROTECT IN PLACE EX GAS

SCALE 1"=20'

NOTE:

ALL LINE AND CURB DATA REFERS TO FACE OF WALL OR CURB AND EDGE OF PAVEMENT OR CONCRETE UNLESS OTHERWISE NOTED

BOLLARD NOTE:

WHERE PLACED WITHIN NO. 2 BACKING OR RIP RAP, BOLLARDS SHALL INCLUDE ADDITIONAL EMBEDMENT DEPTH TO THE THICKNESS OF THE NO. 2 BACKING OR RIP RAP IN WHICH THEY ARE PLACED.

C-02

CENTRAL AREA SMALL-SCALE FACILITY
CIVIL

CASSF SITE PLAN

CITY OF SAN DIEGO, CALIFORNIA
ENGINEERING AND CAPITAL PROJECTS DEPARTMENT
SHEET 23 OF 264 SHEETS

WBS B-21151

CONSULTANT: Stantec, Brown AND Caldwell, Trussell TECHNOLOGIES INC, WEST COAST CIVIL

REGISTERED PROFESSIONAL ENGINEER — KYLE O. McCANTS — No. 71510 — Exp. 12/31/23 — CIVIL — STATE OF CALIFORNIA
12/09/22

APPROVED: FOR CITY ENGINEER ALICE ALTES — DATE 10-13-22 — RCE# C68286 — PRINT DCE NAME

SUBMITTED BY: JOSEPH QUICHO, PROJECT MANAGER
CHECKED BY: MICHAEL VIOLANTE, PROJECT ENGINEER

DESCRIPTION	BY	APPROVED	DATE	FILMED
ORIGINAL	WCC		10/22	
(B) ADDENDUM B	WCC		12/22	

186-1692 CCS27 COORDINATE
1826444-6250407 CCS83 COORDINATE
DRAWING NO. 0100179-23-D — C02

CONTRACTOR
INSPECTOR
NTP DATE
NOC DATE

FILENAME: CASSF-C-02.DWG

(B) EDIT TO KEY NOTES 1 AND 8

ADDENDUM B

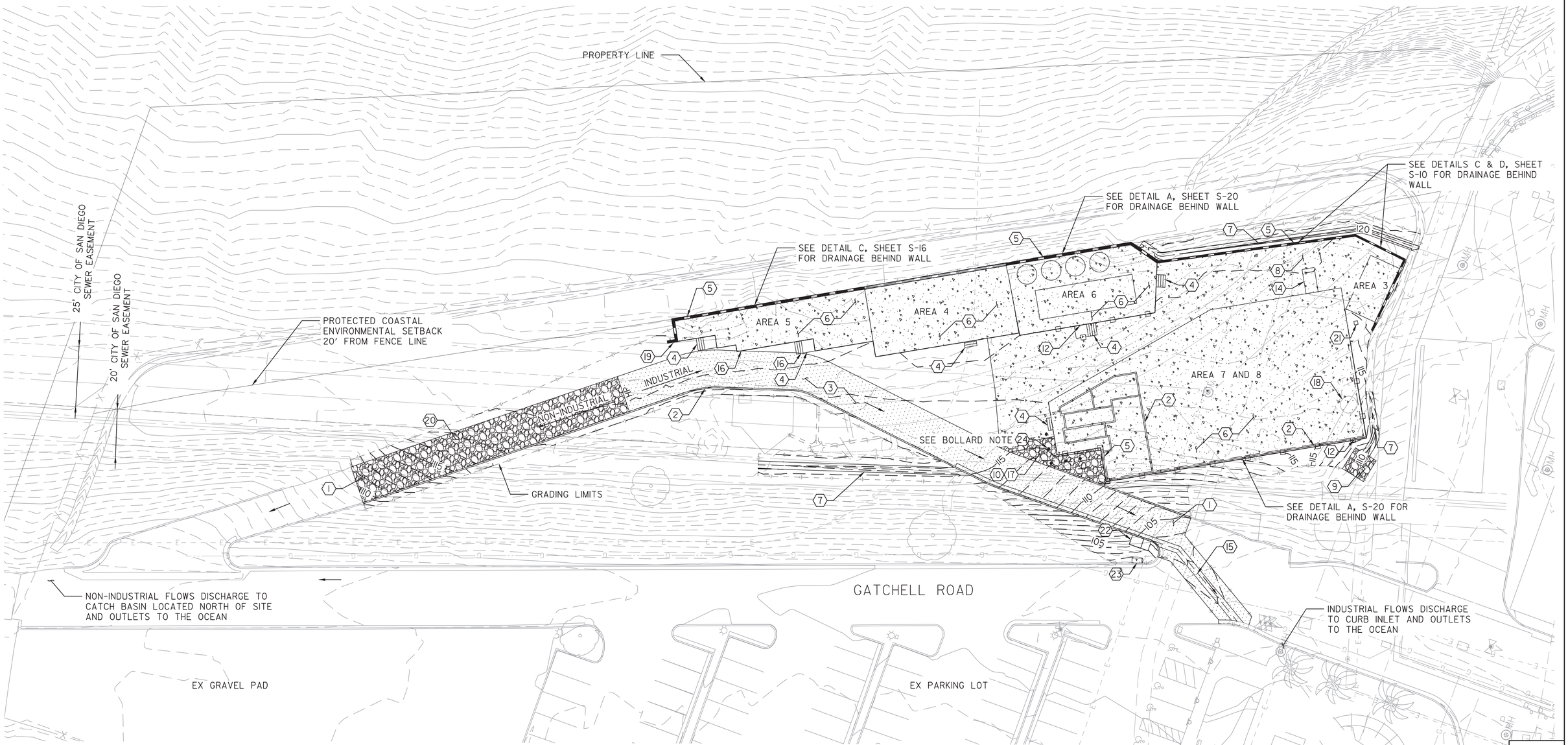

GRADING AND DRAINAGE PLAN - OVERALL

C-03

KEY NOTES

1. DEMOLISH EXISTING ACCESS ROAD, GRADE PER SHEET C-04 & C-05
2. INSTALL NEW 6" CURB PER SDG-150 (B)
3. INSTALL NEW ASPHALT DRIVE PER DETAIL 2, SHEET C-12. CONTRACTOR TO FIELD VERITY THE R-VALUE
4. INSTALL NEW CONCRETE STAIRCASE PER DETAIL 5, SHEET S-04
5. INSTALL NEW RETAINING WALL PER STRUCTURAL PLANS
6. SEE STRUCTURAL PLANS FOR SLAB THICKNESS AND PILE LOCATIONS
7. INSTALL NEW SWALE PER SDD-106 (B)
8. INSTALL NEW SIDEWALK PER SHEET S-07
9. INSTALL 1/4 TON, 2.70' THICK, 10' X 10' TYPE II ENERGY DISSIPATOR PER SDSD SDD-104 WITH A 1' FILTER BLANKET LAYER CONSISTING OF 6" LAYER OF 3/4" ROCK AND 6" LAYER OF SAND
10. SAWCUT AND REMOVE EX CONCRETE AS NECESSARY
12. INSTALL NEW GUARDRAIL PER SHEET S-06
14. INSTALL NEW CONCRETE RAMP PER DETAILS 1 & 2, SHEET S-26
15. INSTALL NEW 3' RIBBON PER SECTION G, SHEET C-12
16. INSTALL NEW REFLECTIVE DIAMONDS
17. INSTALL NO. 2 BACKING GRAVEL, T=15"
18. RELOCATE EX LANDSCAPE FEATURE. FIELD LOCATE PER DIRECTION OF THE CITY
19. INSTALL HEADWALL PER DETAIL 4, SHEET C-12
20. INSTALL NEW GRAVEL DRIVE PER DETAIL 5, SHEET C-12
21. INSTALL NEW 18" X 18" ONE-PIECE TAPERED CATCH BASIN, MODEL OR APPROVED EQUAL
22. INSTALL NEW PUMP STATION PER DETAIL C, SHEET M-24
23. INSTALL NEW 2' X 4' CONCRETE PAD AREA PER DETAIL A, SHEET S-34
24. BOLLARD PER SDSD WM-04, TYP. OF 5

0 20 40 60
SCALE 1"=20'

BOLLARD NOTE:

WHERE PLACED WITHIN NO. 2 BACKING OR RIP RAP, BOLLARDS SHALL INCLUDE ADDITIONAL EMBEDMENT DEPTH TO THE THICKNESS OF THE NO. 2 BACKING OR RIP RAP IN WHICH THEY ARE PLACED.

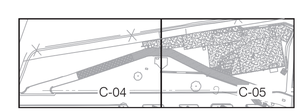

KEY MAP:
SCALE: 1" = 150'

CONSULTANT

Stantec
Brown AND Caldwell
Trussell TECHNOLOGIES INC
WEST COAST CIVIL

REGISTERED PROFESSIONAL ENGINEER ALICE O. ALTES No. 71510 Exp. 12/31/23 CIVIL STATE OF CALIFORNIA
12/09/22

CENTRAL AREA SMALL-SCALE FACILITY
CIVIL
GRADING AND DRAINAGE
PLAN - OVERALL

CITY OF SAN DIEGO, CALIFORNIA
ENGINEERING AND CAPITAL PROJECTS DEPARTMENT
SHEET 24 OF 264 SHEETS

WBS B-21151

APPROVED: FOR CITY ENGINEER — DATE 10-13-22
ALICE ALTES — RCE# C68286
PRINT DCE NAME

SUBMITTED BY: JOSEPH QUICHO, PROJECT MANAGER
CHECKED BY: MICHAEL VIOLANTE, PROJECT ENGINEER

DESCRIPTION	BY	APPROVED	DATE	FILMED
ORIGINAL	WCC		10/22	
(B) ADDENDUM B	WCC		12/22	

186-1692 CCS27 COORDINATE
1826444-6250407 CCS83 COORDINATE
DRAWING NO. 0100179-24-D C03

CONTRACTOR
INSPECTOR
NTP DATE
NOC DATE

(B) EDIT TO KEY NOTES 1 AND 8

ADDENDUM B

FILENAME: CASSF-C-03.DWG

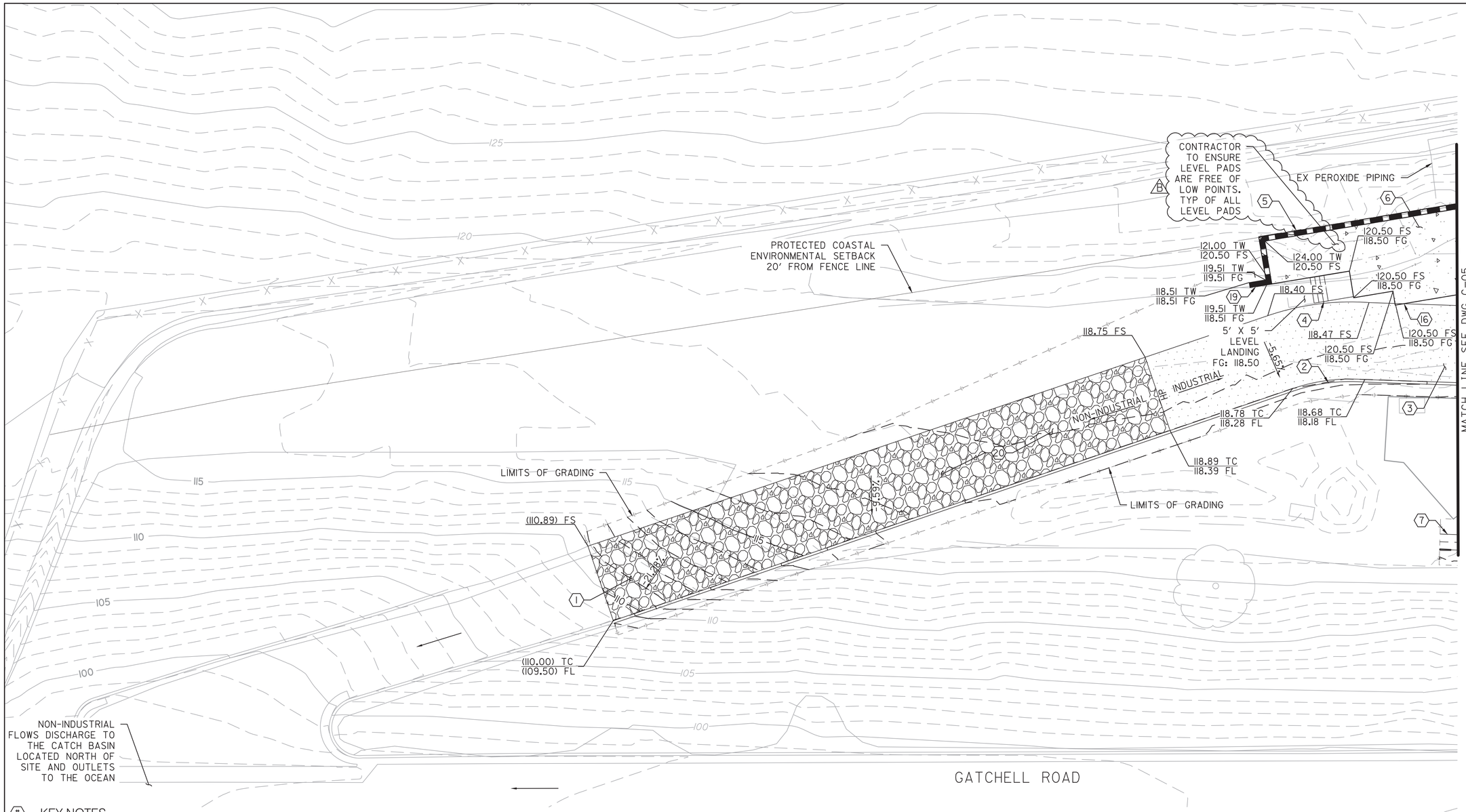

KEY NOTES

1. DEMOLISH EXISTING ACCESS ROAD, GRADE PER SHEET C-04 & C-05 (B)
2. INSTALL NEW 6" CURB PER SDG-150
3. INSTALL NEW ASPHALT DRIVE PER DETAIL 2, SHEET C-12. CONTRACTOR TO FIELD VERIFY THE R-VALUE
4. INSTALL NEW CONCRETE STAIRCASE PER DETAIL 5, SHEET S-04
5. INSTALL NEW RETAINING WALL PER STRUCTURAL PLANS
6. SEE STRUCTURAL PLANS FOR SLAB THICKNESS AND PILE LOCATIONS
7. INSTALL NEW SWALE PER SDD-106
16. INSTALL NEW REFLECTIVE DIAMONDS
19. INSTALL HEADWALL PER DETAIL 4, SHEET C-12
20. INSTALL NEW GRAVEL DRIVE PER DETAIL 5, SHEET C-12

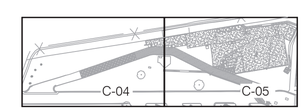

KEY MAP:
SCALE: 1" = 150'

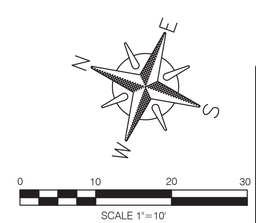

CONSULTANT

Stantec
Brown AND Caldwell
Trussell TECHNOLOGIES INC
WEST COAST CIVIL

REGISTERED PROFESSIONAL ENGINEER — KYLE O. MCCANTS — No. 71510 — Exp. 12/31/23 — CIVIL — STATE OF CALIFORNIA
12/09/22

C-04

CENTRAL AREA SMALL-SCALE FACILITY
CIVIL
NORTH SIDE GRADING AND DRAINAGE PLAN

CITY OF SAN DIEGO, CALIFORNIA
ENGINEERING AND CAPITAL PROJECTS DEPARTMENT
SHEET 25 OF 264 SHEETS

WBS B-21151

APPROVED: FOR CITY ENGINEER — ALICE ALTES — DATE 10-13-22 — RCE# C68286

SUBMITTED BY: JOSEPH QUICHO, PROJECT MANAGER
CHECKED BY: MICHAEL VIOLANTE, PROJECT ENGINEER

DESCRIPTION	BY	APPROVED	DATE	FILMED
ORIGINAL	WCC		10/22	
(B) ADDENDUM B	WCC		12/22	

CCS27 COORDINATE: 186-1692
CCS83 COORDINATE: 1826444-6250407
DRAWING NO.: 0100179-25-D — C04

CONTRACTOR
INSPECTOR
NTP DATE
NOC DATE

NORTH SIDE GRADING AND DRAINAGE PLAN

FILENAME: CASSF-C-04.DWG

(B) ADD NOTE TO LEVEL PAD AND EDIT TO KEY NOTE 1

ADDENDUM B

SOUTH SIDE GRADING AND DRAINAGE PLAN

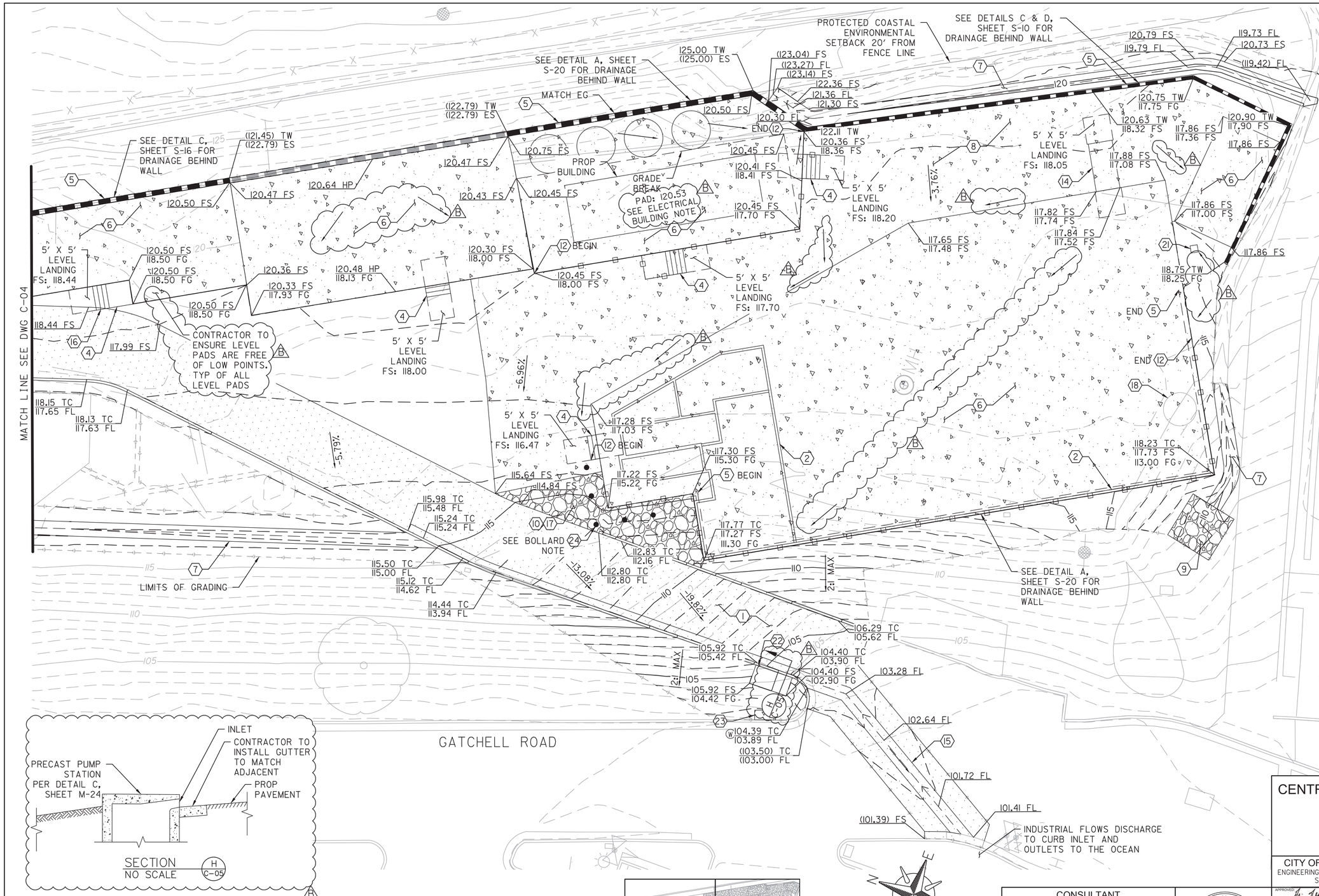

KEY NOTES

1. DEMOLISH EXISTING ACCESS ROAD, GRADE PER SHEET C-04 & C-05
2. INSTALL NEW 6" CURB PER SDG-150
3. INSTALL NEW ASPHALT DRIVE PER DETAIL 2, SHEET C-12. CONTRACTOR TO FIELD VERIFY THE R-VALUE
4. INSTALL NEW CONCRETE STAIRCASE PER DETAIL 5, SHEET S-04
5. INSTALL NEW RETAINING WALL PER STRUCTURAL PLANS
6. SEE STRUCTURAL PLANS FOR SLAB THICKNESS AND PILE LOCATIONS
7. INSTALL NEW SWALE PER SDD-106 B
8. INSTALL NEW SIDEWALK PER SHEET S-07
9. INSTALL 1/4 TON, 2.70' THICK, 10' X 10' TYPE II ENERGY DISSIPATOR PER SDSD SDD-104 WITH A 1' FILTER BLANKET LAYER CONSISTING OF 6" LAYER OF 3/4" ROCK AND 6" LAYER OF SAND
10. SAWCUT AND REMOVE EX CONCRETE AS NECESSARY
12. INSTALL NEW GUARDRAIL PER SHEET S-06
14. INSTALL NEW CONCRETE RAMP PER DETAILS 1 & 2, SHEET S-26
15. INSTALL NEW 3' RIBBON PER SECTION G, SHEET C-12
16. INSTALL NEW REFLECTIVE DIAMONDS
17. INSTALL NO. 2 BACKING GRAVEL, T=15"
18. RELOCATE EX LANDSCAPE FEATURE. FIELD LOCATE PER DIRECTION OF THE CITY
21. INSTALL NEW 18" X 18" ONE-PIECE TAPERED CATCH BASIN, MODEL OR APPROVED EQUAL
22. INSTALL NEW PUMP STATION PER DETAIL C, SHEET M-24
23. INSTALL NEW 2' X 4' CONCRETE PAD AREA PER DETAIL A, SHEET S-34
24. BOLLARD PER SDSD WM-04, TYP. OF 5

ELECTRICAL BUILDING NOTE:

ELECTRICAL BUILDING PAD ELEVATION SHALL BE PROVIDED TO THE OUTER EDGE OF EMBEDED STEEL PLATES OR EXTERIOR BUILDING WALL, WHICHEVER IS FURTHER ON EACH SIDE. SEE DETAIL 3, SHEET S-20 FOR REFERENCE. B

C-05

BOLLARD NOTE:

WHERE PLACED WITHIN NO. 2 BACKING OR RIP RAP, BOLLARDS SHALL INCLUDE ADDITIONAL EMBEDMENT DEPTH TO THE THICKNESS OF THE NO. 2 BACKING OR RIP RAP IN WHICH THEY ARE PLACED.

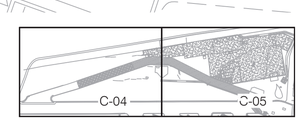

KEY MAP:
SCALE: 1" = 150'

SCALE 1"=10'

CENTRAL AREA SMALL-SCALE FACILITY
CIVIL
SOUTH SIDE GRADING AND DRAINAGE PLAN

CITY OF SAN DIEGO, CALIFORNIA
ENGINEERING AND CAPITAL PROJECTS DEPARTMENT
SHEET 26 OF 264 SHEETS

WBS B-21151

CONSULTANT: Stantec, Brown AND Caldwell, Trussell TECHNOLOGIES INC, WEST COAST CIVIL

REGISTERED PROFESSIONAL ENGINEER KYLE D. McCARTY No. 71510 Exp. 12/31/23 CIVIL STATE OF CALIFORNIA
12/09/22

APPROVED: FOR CITY ENGINEER ALICE ALTES, PRINT DCE NAME — DATE 10-13-22 — RCE# C68286

SUBMITTED BY: JOSEPH QUICHO, PROJECT MANAGER
CHECKED BY: MICHAEL VIOLANTE, PROJECT ENGINEER

DESCRIPTION	BY	APPROVED	DATE	FILMED
ORIGINAL	WCC		10/22	
B ADDENDUM B	WCC		12/22	

186-1692 CCS27 COORDINATE
1826444-6250407 CCS83 COORDINATE
DRAWING NO. 0100179-26-D — C05

CONTRACTOR ____ NTP DATE ____
INSPECTOR ____ NOC DATE ____

B ADD NOTE TO LEVEL PAD, ADD FLOW ARROWS, ADD PUMP STATION SECTION DETAIL, EDIT TO KEY NOTES 1 AND 8, ADD PAD ELEVATION ON AREA 6, AND ADD ELECTRICAL BUILDING NOTE

ADDENDUM B

FILENAME: CASSF-C-05.DWG

December 20, 2022
Pure Water Program (PWP) Central Area Small Scale Facility

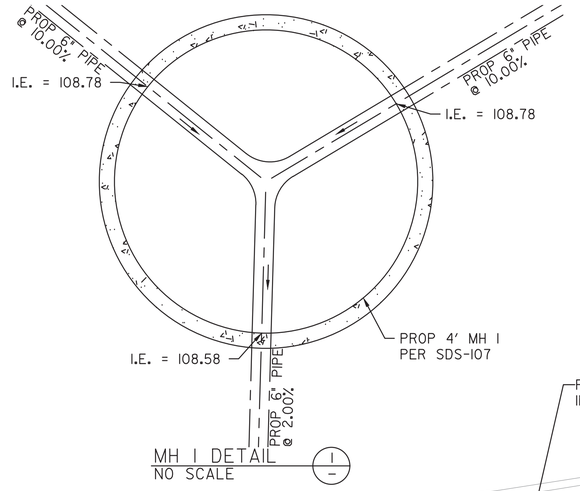

MH I DETAIL (1)
NO SCALE

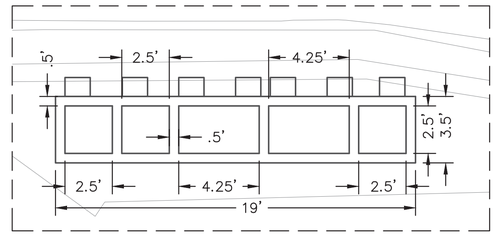

CHEMICAL FILL STATION ENLARGED PLAN (2)
NO SCALE

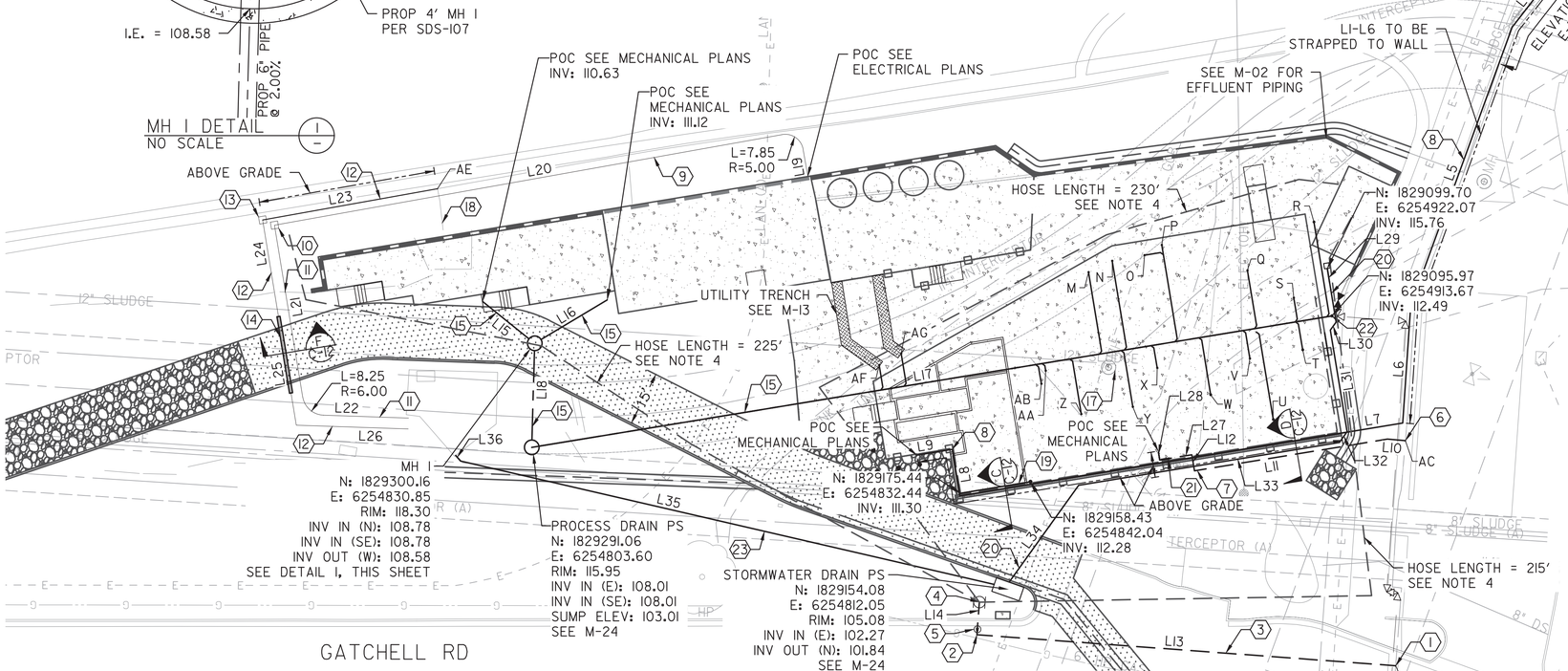

KEY NOTES:

1. INSTALL (N) 6" TEE.
2. INSTALL (N) 6" 90° BEND.
3. INSTALL (N) 6" C-900 PVC WATERLINE PER SDW-110.
4. INSTALL (N) FIRE HYDRANT PER SDW-104.
5. INSTALL (N) 6" GATE VALVE.
6. INSTALL (N) 2" TAPPING SADDLE.
7. INSTALL (N) 2" COPPER WATER SERVICE PER SDW-107 AND SDW-149.
8. INSTALL (N) CHEMICAL FILL LINES PER M-14, M-15, M-16, AND M-21
9. INSTALL (N) 2" ELECTRICAL CONDUIT FROM EXISTING POWER PANEL TO NEW JUNCTION BOX.
10. INSTALL (N) ELECTRICAL JUNCTION BOX.
11. INSTALL (N) 2" ELECTRICAL CONDUIT FROM NEW JUNCTION BOX TO EXISTING ELECTRICAL SERVICES. OWNER TO PROVIDE AND INSTALL.
12. INSTALL (N) HYDROGEN PEROXIDE PIPE EXTENSION. OWNER TO PROVIDE AND INSTALL.
13. INSTALL (N) H202 JUNCTION BOX. OWNER TO PROVIDE.
14. INSTALL (N) 10" PVC DR 18 CASING PIPE.
15. INSTALL (N) 6" C-900 PVC CHEMICAL DRAIN LINE.
16. INSTALL (N) CHEMICAL FILL STATION WITH 6" CURBS SURROUNDING THE SUMP DRAINS.
17. ADD ADDITIONAL RISERS TO MATCH GRADE AS NECESSARY PER DETAIL 3/C-12.
18. CONTRACTOR TO PROTECT IN PLACE EXISTING HYDROGEN PEROXIDE LINE UNTIL NEW HYDROGEN PEROXIDE LINE IS PLACE INTO SERVICE. SEE SPECIFICATION 01 31 13.
19. INSTALL (N) 8" C-900 PVC DRAIN LINE UNDER AREA 7/8 SLAB AND OUTLET AT FG.
20. INSTALL (N) 4" SCH 40 PVC DRAIN LINE PER SDD-110. DEPTH OF COVER TO BE 2' UNDER ACCESS ROAD AND 6" MIN ELSEWHERE. PIPE TO HAVE 1' SEPARATION FROM ALL OTHER UTILITIES.
21. INSTALL (N) 2" REDUCED PRESSURE PRINCIPAL ASSEMBLY ZURN MODEL 975XL2 PER SDW-155.
22. INSTALL (N) CLEANOUT PER SDS-103.
23. INSTALL (N) 4" FM. SEE M-24.

POINT TABLE

SIZE	POINT NAME	NORTHING	EASTING
4"	M	1829163.22	6254901.90
6"	U	1829101.35	6254881.25
4"	N	1829158.16	6254907.07
4"	O	1829150.33	6254911.62
4"	P	1829146.82	6254915.93
4"	Q	1829122.17	6254917.45
6"	R	1829109.53	6254936.33
4"	S	1829107.56	6254914.76
6"	T	1829100.32	6254902.09
4"	V	1829113.19	6254894.83
6"	W	1829119.92	6254881.72
4"	X	1829136.35	6254883.61
4"	Y	1829138.98	6254871.18
4"	Z	1829151.64	6254864.42

LINE TABLE

LINE #	LENGTH	DIRECTION	UTILITY TYPE
L1	2.62	S55° 08' 22.37"W	CHEMICAL
L2	47.74	S35° 28' 58.49"E	CHEMICAL
L3	39.72	S46° 12' 42.50"E	CHEMICAL
L4	20.75	S72° 12' 27.56"E	CHEMICAL
L5	81.89	N89° 53' 51.19"E	CHEMICAL
L6	32.41	N73° 47' 01.73"E	CHEMICAL
L7	123.98	S29° 25' 56.98"E	CHEMICAL
L8	13.00	S60° 35' 10.47"W	CHEMICAL
L9	9.92	S29° 25' 55.89"E	CHEMICAL
L10	5.00	N15° 07' 08.13"W	WATER
L11	54.00	N29° 25' 57.00"W	WATER
L12	4.50	N60° 34' 03.00"E	WATER
L13	116.00	N15° 52' 07.88"W	WATER
L14	9.00	N74° 07' 52.12"E	WATER
L15	18.47	N18° 40' 05.62"E	WASTEWATER

LINE TABLE

LINE #	LENGTH	DIRECTION	UTILITY TYPE
L16	23.37	S50° 58' 25.64"E	WASTEWATER
L17	219.50	S29° 25' 57.01"E	WASTEWATER
L18	23.71	S71° 31' 30.26"W	WASTEWATER
L19	7.53	S59° 44' 10.50"W	ELECTRICAL
L20	142.43	S30° 12' 58.10"E	ELECTRICAL
L21	48.08	N60° 34' 02.99"E	ELECTRICAL
L22	23.55	N18° 10' 57.01"W	ELECTRICAL
L23	49.06	S30° 12' 58.10"E	PEROXIDE
L24	57.42	N60° 34' 02.99"E	PEROXIDE
L25	21.40	N60° 34' 02.99"E	PEROXIDE
L26	30.93	N18° 10' 57.01"W	PEROXIDE
L27	9.00	N29° 25' 57.00"W	WATER
L28	2.50	N60° 34' 03.00"E	WATER
L29	15.00	N60° 34' 02.99"E	DRAINAGE
L30	2.69	S74° 25' 57.01"E	DRAINAGE

LINE TABLE

LINE #	LENGTH	DIRECTION	UTILITY TYPE
L31	28.45	N60° 34' 02.99"E	DRAINAGE
L32	3.64	S74° 25' 57.01"E	DRAINAGE
L33	73.00	N29° 25' 57.01"W	DRAINAGE
L34	32.88	S74° 25' 57.01"E	DRAINAGE
L35	151.29	N07° 05' 49.92"W	DRAINAGE
L36	2.05	N28° 08' 13.15"E	DRAINAGE

POINT TABLE

SIZE	POINT NAME	NORTHING	EASTING
4"	AA	1829164.99	6254872.29
4"	AB	1829164.89	6254868.48
2"	AC	1829065.04	6254888.31
6"	AD	1829046.20	6254829.04
	AE	1829340.06	6254861.71
	AF	1829208.70	6254857.91
	AG	1829204.12	6254863.05

NOTES:
1. CONTRACTOR SHALL COORDINATE LOCATION OF ALL DRAIN LINES. LOCATIONS OF DRAINS LINES SHOWN ON THIS DRAWING ARE APPROXIMATE ONLY.
2. ALL STRUCTURE POINT NORTHINGS AND EASTINGS ARE AT STRUCTURE CENTER.
3. ALL PIPING TO BE UNDERGROUND UNLESS OTHERWISE DIMENSIONED ON PLANS AS: |----|
4. HOSE LENGTHS ARE SHOWN ONLY TO INDICATE THE DISTANCES FOR FIRE DEPARTMENT HOSE REACH. HOSE SUPPLY IS NOT INCLUDED IN THE CONTRACT.

SCALE 1"=20'

CASSF YARD PIPING

C-11

CENTRAL AREA SMALL-SCALE FACILITY
CIVIL

CASSF YARD PIPING

CITY OF SAN DIEGO, CALIFORNIA
ENGINEERING AND CAPITAL PROJECTS DEPARTMENT
SHEET 32 OF 264 SHEETS

WBS B-21151

CONSULTANT: Stantec, Brown AND Caldwell, Trussell TECHNOLOGIES INC, WEST COAST CIVIL

REGISTERED PROFESSIONAL ENGINEER KYLE O. McCARTY No. 71510 Exp. 12/31/23 CIVIL STATE OF CALIFORNIA
12/09/22

APPROVED: FOR/CITY ENGINEER ALICE ALTES 10-13-22 DATE C68286 RCE#
PRINT DCE NAME

DESCRIPTION	BY	APPROVED	DATE	FILMED
ORIGINAL	WCC		10/22	
ADDENDUM B	WCC		12/22	

CONTRACTOR
INSPECTOR
NTP DATE
NOC DATE

SUBMITTED BY: JOSEPH QUICHO, PROJECT MANAGER
CHECKED BY: MICHAEL VIOLANTE, PROJECT ENGINEER
186-1692 CCS27 COORDINATE
1826444-6250407 CCS83 COORDINATE
DRAWING NO. 0100179-32-D
C11

FILENAME: CASSF-C-11 1.DWG

UPDATE L15-L18 UTILITY TYPE IN TABLE

ADDENDUM B

STORM WATER REQUIREMENTS:

1. THIS PROJECT IS SUBJECT TO MUNICIPAL CODE SECTION 4303 AND ORDER NO. R9-2013-0001 AS AMENDED BY R9-2015-0001 AND R9-2015-0100.
2. ALL WORK RELATED TO POST-CONSTRUCTION STORMWATER QUALITY SHALL BE IN ACCORDANCE WITH THE STORM WATER QUALITY MANAGEMENT PLAN ENTITLED,
   PROJECT NAME/ WBS OR IO: B-21151
   PROJECT ADDRESS: 1902 GATCHELL ROAD
   PREPARED BY: WEST COAST CIVIL
   DATE PREPARED: AUGUST 16, 2022
3. POST-CONSTRUCTION BMPS ARE REQUIRED, SEE THIS SHEET
4. NRCS HYDROLOGIC SOIL GROUP: D
5. APPROXIMATE GROUNDWATER DEPTH: 70 TO 91 BGS

POST-CONSTRUCTION BMP CERTIFICATION:

AS THE PROFESSIONAL IN RESPONSIBLE CHARGE FOR THE DESIGN OF THIS PROJECT, I CERTIFY THAT I HAVE INSPECTED ALL CONSTRUCTED LOW IMPACT DEVELOPMENT (LID) SITE DESIGN, SOURCE CONTROL, HYDROMODIFICATION MANAGEMENT, AND TREATMENT CONTROL BMPS REQUIRED PER THE STORM WATER STANDARDS MANUAL AND CONTRACT REQUIREMENTS; AND THAT SAID BMPS HAVE BEEN CONSTRUCTED IN COMPLIANCE WITH THE APPROVED PLANS AND ALL APPLICABLE SPECIFICATIONS, PERMITS, ORDINANCES AND SAN DIEGO REGIONAL MS4 PERMIT.

I UNDERSTAND THAT THIS BMP CERTIFICATION STATEMENT DOES NOT CONSTITUTE AN OPERATION AND MAINTENANCE VERIFICATION.

SIGNATURE: _____

DATE OF SIGNATURE: _____

PRINTED NAME: _____

TITLE: _____

PHONE NO.: _____

SITE DESIGN, SOURCE CONTROL AND POLLUTANT CONTROL BMP OPERATION & MAINTENANCE PROCEDURE

O&M RESPONSIBLE PARTY DESIGNEE:

BMP DESCRIPTION	INSPECTION FREQUENCY	MAINTENANCE FREQUENCY	MAINTENANCE METHOD	QUANTITY	INCLUDED IN O&M MANUAL			SHEET NUMBER
SITE DESIGN ELEMENTS	ANNUAL	AS NEEDED	REPAIR	5	YES	X	NO	
DESCRIPTION: AREA 1 4.3.1 MAINTAIN NATURAL DRAINAGE PATHWAYS, 4.3.2 HAVE NATURAL AREAS, SOILS AND VEGITATION BE CONSERVED, 4.3.3 MINIMIZE IMPERVIOUS AREA, AND 4.3.6 RUNOFF COLLECTION								
SOURCE CONTROL ELEMENTS	ANNUAL	AS NEEDED	REPAIR	1	YES	X	NO	
DESCRIPTION: 4.2.1 PREVENTION OF ILLICIT DISCHARGES INTO THE MS4								
SOURCE CONTROL ELEMENTS	ANNUAL	AS NEEDED	REPAIR	2	YES	X	NO	
DESCRIPTION: 4.2.2 STORM DRAIN STENCILING OR SIGNAGE								
SOURCE CONTROL ELEMENTS	ANNUAL	AS NEEDED	REPAIR	1	YES	X	NO	
DESCRIPTION: 4.2.3 PROTECT OUTDOOR MATERIALS STORAGE FROM RAINFALL, RUN-ON, RUN-OFF, AND WIND DISPERSAL								
SOURCE CONTROL ELEMENTS	ANNUAL	AS NEEDED	REPAIR	1	YES	X	NO	
DESCRIPTION: 4.2.4 PROTECT TRASH STORAGE AREAS FROM RUN-ON, RUN-OFF AND WIND DISPERSAL								
POLLUTANT CONTROL BMP(S)	MONTHLY	AS NEEDED	STANDARD MANUFACTURER MAINTENANCE	1	YES	X	NO	
DESCRIPTION: BMP 1. STORM WATER PUMP STATION								
HMP FACILITY (IF SEPARATE)					YES		NO	
DESCRIPTION:								
HMP EXEMPT	X							

LEGEND:

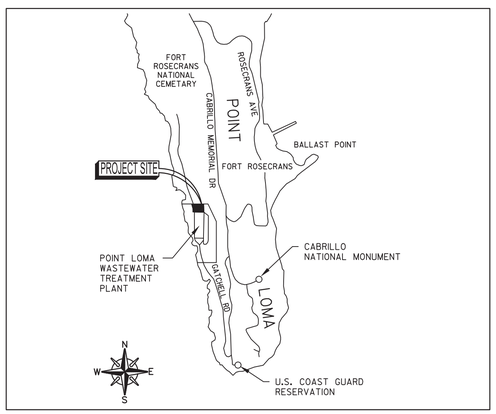

SITE MAP

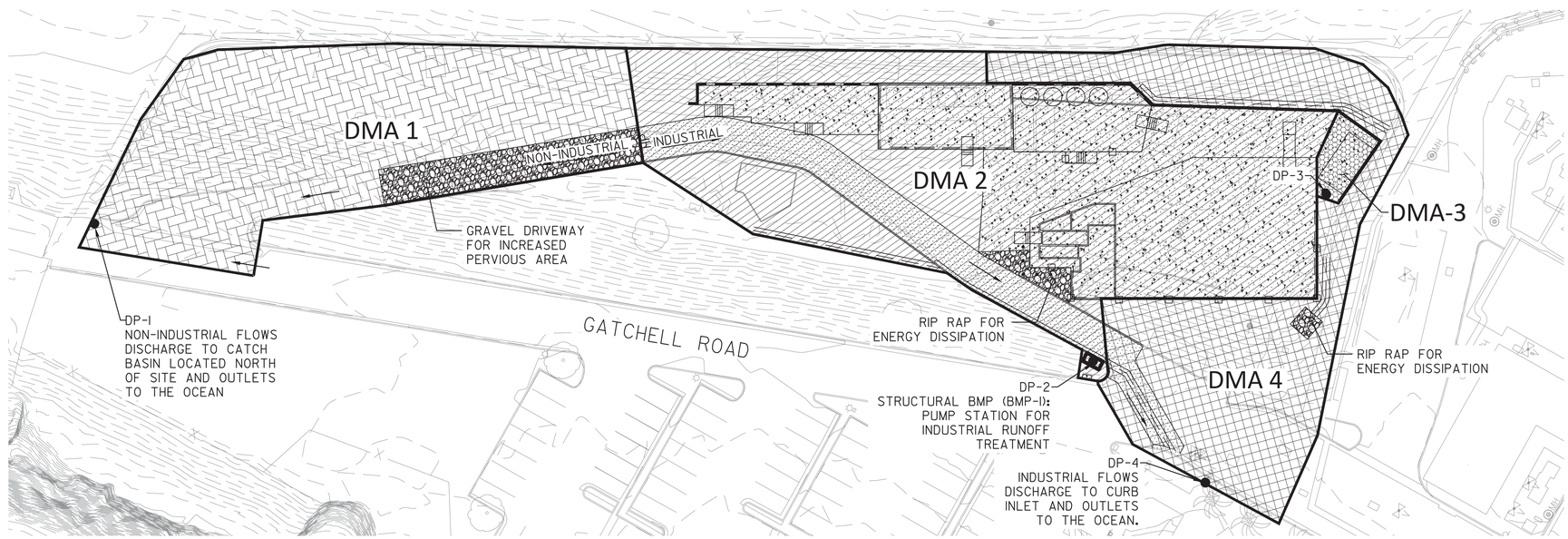

DMA BOUNDARY MAP

C-14

DECLARATION OF RESPONSIBLE CHARGE

I HEREBY DECLARE THAT I AM THE ENGINEER OF WORK AND THAT I HAVE EXERCISED RESPONSIBLE CHARGE OVER THE DESIGN OF THE PERMANENT STORM WATER BMPs AS DEFINED IN SECTION 6703 OF THE BUSINESS AND PROFESSIONS CODE AND THAT THE DESIGN IS CONSISTENT WITH CURRENT STANDARDS.
I UNDERSTAND THAT THE CHECK OF PROJECT DRAWINGS AND SPECIFICATIONS BY THE CITY OF SAN DIEGO IS CONFINED TO A REVIEW ONLY AND DOES NOT RELIEVE ME, AS ENGINEER OF WORK, OF MY RESPONSIBILITIES FOR PROJECT DESIGN.

KYLE McCARTY — NAME
R.C.E. NO. 71510 — EXP. 12-31-23
8/16/22 — DATE

CENTRAL AREA SMALL-SCALE FACILITY
CIVIL
BMP MAP FOR PRIORITY DEVELOPMENT PROJECTS

CITY OF SAN DIEGO, CALIFORNIA
ENGINEERING AND CAPITAL PROJECTS DEPARTMENT
SHEET 35 OF 264 SHEETS

WBS B-21151

CONSULTANT: Stantec, Brown AND Caldwell, Trussell TECHNOLOGIES INC, WEST COAST CIVIL

REGISTERED PROFESSIONAL ENGINEER — KYLE D. McCARTY — No. 71510 — Exp. 12/31/23 — CIVIL — STATE OF CALIFORNIA
12/09/22

APPROVED: FOR CITY ENGINEER — ALICE ALTES — PRINT DCE NAME — 10/13/2022 DATE — C68286 RCE#

DESCRIPTION	BY	APPROVED	DATE	FILMED
ORIGINAL	WCC		10/22	
B ADDENDUM B	WCC		12/22	

SUBMITTED BY: JOSEPH QUICHO — PROJECT MANAGER
CHECKED BY: MICHAEL VIOLANTE — PROJECT ENGINEER
186-1692 — CCS27 COORDINATE
1826444-6250407 — CCS83 COORDINATE
DRAWING NO. 0100179-35-D — C14

CONTRACTOR _____ NTP DATE _____
INSPECTOR _____ NOC DATE _____

BMP MAP FOR PRIORITY DEVELOPMENT PROJECTS

FILENAME: CASSF-C-14.DWG

B UPDATE SITE DESIGN, SOURCE CONTROL AND POLLUTANT CONTROL BMP OPERATION & MAINTENANCE PROCEDURE TABLE

ADDENDUM B

ABBREVIATIONS (CONTINUED)

(N)	NEW
N/A	NOT APPLICABLE
NDT	NON DESTRUCTIVE TESTING
NIC	NOT IN CONTRACT
NO (#)	NUMBER
NS	NEAR SIDE
NTS	NOT TO SCALE
OC	ON CENTER
OD	OUTSIDE
L	DIAMETER
OH	OPPOSITE HAND
OPNG	OPENING
OPP	OPPOSITE
PC	PIECE
PCF	POUNDS PER CUBIC FOOT
PJP	PARTIAL JOINT PENETRATION
PL	PLATE
P	PROPERTY LINE
PLF	POUNDS PER LINEAR FOOT
PSF	POUNDS PER SQUARE FOOT
PSI	POUNDS PER SQUARE INCH
R	RADIUS
REF	REFERENCE
REINF	REINFORCE(ING)(MENT)
REQD	REQUIRED
RW	RETAINING WALL
SCHED	SCHEDULE(D)
SDRSD	SAN DIEGO REGIONAL STANDARD DRAWING
SECT	SECTION
SEOR	STRUCTURAL ENGINEER OF RECORD
SHT	SHEET
SIM	SIMILAR
SMRF	SPECIAL MOMENT-RESISTING FRAME
SOG	SLAB ON GRADE
SPCG	SPACING
SPEC	SPECIFICATION
SQ	SQUARE
SS	STAINLESS STEEL
STD	STANDARD
STGR	STAGGER(ED)
STIFF	STIFFEN(ER)
STIR	STIRRUP
STL	STEEL
STRUCT	STRUCTURAL
SYMM	SYMMETRICAL
T (T)	TOP
T&B	TOP & BOTTOM
TG	TAPERED GIRDER
THK	THICK(NESS)
THRD	THREAD(ED)
TO	TOP OF
TOC	TOP OF CONCRETE
TOF	TOP OF FOOTING
TOS	TOP OF STEEL
TOT	TOTAL
TOW	TOP OF WALL
TRANS	TRANSVERSE
TYP	TYPICAL
ULT	ULTIMATE
UNBLKD	UNBLOCKED
UON	UNLESS OTHERWISE NOTED
VERT (V)	VERTICAL
W	WIDTH (WIDE)
W/	WITH
WHS	WELDED HEADED STUD
W/I	WITHIN
W/O	WITHOUT
WP	WORK POINT
WT	WEIGHT
YD	YARD

STRUCTURAL OBSERVATION

1. STRUCTURAL OBSERVATION SHALL BE PROVIDED BY THE SEOR FOR THE FOLLOWING ITEMS:

   A. MAT FOUNDATIONS.
   B. CIDH PILES.
   C. REINFORCED CONCRETE PILE-SUPPORTED SLABS.

2. STRUCTURAL OBSERVATION IS REQUIRED IN ADDITION TO CITY AND SPECIAL INSPECTIONS.

3. STRUCTURAL OBSERVATION MEANS THE VISUAL OBSERVATION OF THE STRUCTURAL SYSTEM BY THE ENGINEER OF RECORD, FOR GENERAL CONFORMATION TO THE APPROVED PLANS AND SPECIFICATIONS, AT SIGNIFICANT CONSTRUCTION STAGES FOR THE ITEMS LISTED AND AT COMPLETION OF THE STRUCTURAL SYSTEM. STRUCTURAL OBSERVATION DOES NOT INCLUDE OR WAIVE THE RESPONSIBILITY FOR THE INSPECTIONS REQUIRED BY CHAPTER 17 OR OTHER SECTIONS OF THE CBC.

4. IT IS THE RESPONSIBILITY OF THE CONTRACTOR TO REQUEST STRUCTURAL OBSERVATION BY THE ENGINEER. THE ENGINEER SHALL BE GIVEN A MINIMUM OF 2 WORK DAYS NOTICE BY THE CONTRACTOR PRIOR TO PERFORMING STRUCTURAL OBSERVATION.

QUALITY CONTROL

1. THE SPECIAL INSPECTOR MUST BE REGISTERED BY THE CITY OF SAN DIEGO, DEVELOPMENT SERVICES, IN THE CATEGORY OF WORK REQUIRED TO HAVE SPECIAL INSPECTION.

2. THE CONSTRUCTION MATERIALS TESTING LABORATORY MUST BE APPROVED BY THE CITY OF SAN DIEGO, DEVELOPMENT SERVICES, FOR TESTING OF MATERIALS, SYSTEMS, COMPONENTS AND EQUIPMENT.

3. OFFSITE FABRICATOR MUST BE REGISTERED AND APPROVED BY THE CITY OF SAN DIEGO, DEVELOPMENT SERVICES, FOR THE FABRICATION OF MEMBERS AND ASSEMBLIES ON THE PREMISES OF THE FABRICATOR'S SHOP.

4. OFFSITE FABRICATOR SHALL SUBMIT AN "APPLICATION TO PERFORM OFF-SITE FABRICATION" TO THE INSPECTION SERVICES DIVISION FOR APPROVAL PRIOR TO THE COMMENCEMENT OF FABRICATION.

5. OFFSITE FABRICATOR SHALL SUBMIT A "CERTIFICATE OF COMPLIANCE FOR OFF-SITE FABRICATION" TO THE INSPECTION SERVICES DIVISION PRIOR TO ERECTION OF FABRICATED ITEMS AND ASSEMBLIES.

6. THE SPECIAL INSPECTIONS IDENTIFIED ON PLANS ARE, IN ADDITION TO, AND NOT SUBSTITUTE FOR, THOSE INSPECTIONS REQUIRED TO BE PERFORMED BY A CITY'S BUILDING INSPECTOR.

7. FABRICATION OF MEMBERS AND ASSEMBLIES DONE IN FABRICATOR'S SHOP APPROVED BY INSPECTION SERVICES NEED NOT HAVE CONTINUOUS OR PERIODIC SPECIAL INSPECTION. AT COMPLETION OF FABRICATION, THE APPROVED FABRICATOR SHALL SUBMIT THE "CERTIFICATE OF COMPLIANCE" FORM TO INSPECTION SERVICES.

DEFERRED SUBMITTALS

1. PLANS FOR THE DEFERRED SUBMITTAL ITEMS LISTED BELOW SHALL BE SUBMITTED IN A TIMELY MANNER BUT NOT LESS THAN 60 BUSINESS DAYS PRIOR TO INSTALLATION FOR CITY REVIEW AND APPROVAL. ALL COMMENTS RELATED TO THE DEFERRED SUBMITTAL MUST BE ADDRESSED TO THE SATISFACTION OF THE PLAN CHECK DIVISION PRIOR TO APPROVAL OF THE SUBMITTAL ITEMS. FOR ADDITIONAL INFORMATION REFER TO INFORMATION BULLETIN 188 - DEFERRED SUBMITTALS.

   A. PREMANUFACTURED CANOPIES INCLUDING UNFACTORED CANOPY REACTIONS AND STRUCTURAL DRAWINGS AND CALCULATIONS SIGNED BY A CIVIL OR STRUCTURAL ENGINEER REGISTERED IN THE STATE OF CALIFORNIA.

   B. PREMANUFACTURED ELECTRICAL TRAILER.

2. THE CONTRACTOR WILL NOT BE AUTHORIZED FOR ANY INSPECTION OF THE DEFERRED ITEMS PROPOSED PRIOR TO THE SUBMITTAL AND APPROVAL OF PLANS AND/OR CALCULATIONS FOR THOSE DEFERRED ITEMS.

3. IT IS UNDERSTOOD THAT PLANS FOR THE PROJECT HAVE, AT THIS TIME, BEEN REVIEWED FOR COMPLIANCE WITH ALL APPLICABLE STATE AND CITY REGULATIONS, AND THAT THE PROJECT AS A WHOLE HAS BEEN APPROVED BY THE CITY, WITH THE EXCEPTION OF THE DEFERRED ITEMS LISTED.

4. THE DEFERRED SUBMITTAL ITEMS SHALL NOT BE INSTALLED UNTIL THEIR DESIGN AND SUBMITTAL DOCUMENTS HAVE BEEN APPROVED BY THE BUILDING OFFICIAL.

5. THE REGISTERED AND RESPONSIBLE DESIGN PROFESSIONAL SHALL REVIEW THE DEFERRED SUBMITTAL DOCUMENTS AND SUBMIT THEM TO THE BUILDING OFFICIAL, WITH ANNOTATION INDICATING THAT THE DEFERRED SUBMITTAL DOCUMENTS HAVE BEEN REVIEWED AND FOUND TO BE IN GENERAL CONFORMANCE TO THE DESIGN OF THE BUILDING.

MISCELLANEOUS METALS B

1. MISCELLANEOUS METALS SHALL INCLUDE ITEMS MANUFACTURED AND SHOP FORMED OR FABRICATED ITEMS NOT SPECIFIED ELSEWHERE.

2. ALL MISCELLANEOUS STEEL ITEMS THAT ARE NOT STAINLESS STEEL SHALL BE HOT DIP GALVANIZED.

3. WELDING SHALL COMPLY WITH AWS PROCEDURES, AND WELDERS MUST BE CERTIFIED.

4. WELDING ELECTRODES FOR MANUAL SHIELDED METAL-ARC WELDING SHALL CONFORM TO SPECIFICATIONS FOR MILD STEEL COVERED ARC WELDING ELECTRODES, AWS A5.1, OR SPECIFICATION FOR LOW-ALLOY STEEL COVERED ARC-WELDING ELECTRODES AWS A5.5. ELECTRODES SHALL BE E70 SERIES.

5. ELECTRODES USED IN THE GAS METAL ARC PROCESS SHALL CONFORM TO SPECIFICATION FOR MILD STEEL ELECTRODES FOR GAS METAL-ARC WELDING AWS A5.18.

6. ALL TESTING AND WELDING OF STRUCTURAL STEEL AND ALL CERTIFICATION OF WELDERS SHALL BE PER AWS D1.1. REFER TO SPECIAL INSPECTION NOTES FOR ADDITIONAL WELDING REQUIREMENTS.

7. GALVANIZING SHALL COMPLY WITH ASTM A123, WITH MINIMUM COATING THICKNESS PER TABLE FOR EXPOSURE TO SALT AIR.

8. STEEL SHAPES, PLATES AND BARS - ASTM A36.

9. STEEL PIPE - ASTM A501 OR ASTM A53, TYPE E OR S.

10. STEEL TUBE - ASTM A500 GRADE B.

11. BOLTS: ASTM A307 UON.

12. FURNISH ALL NECESSARY ANCHORAGE DEVICES AND FASTENERS FOR COMPLETE INSTALLATION.

13. BASE PLATES SHALL BE BEDDED WITH A MINIMUM OF 1-INCH DRY PACK GROUT (NON-SHRINK) CONFORMING TO ASTM C1107.

14. SHOP DRAWINGS SHALL BE REVIEWED BY SEOR PRIOR TO FABRICATION.

15. VERIFY FIELD CONDITIONS SO THAT ITEMS CAN BE INSTALLED WITHOUT CUTTING AND FITTING IN THE FIELD.

16. FIT EXPOSED CONNECTIONS ACCURATELY TO FORM TIGHT JOINTS.

17. TOUCH UP PRIMED AND GALVANIZED SURFACES DAMAGED OR FIELD FITTED.

18. LADDERS:

    A. SHOP FABRICATED OF SHAPES, AS INDICATED.

19. RAILINGS:

    A. STANDARD 1 1/2 PIPE CONSTRUCTION.
    B. WELD ALL INTERSECTIONS ALL AROUND.
    C. CLOSE ALL ENDS.
    D. GRIND SMOOTH SO THAT THERE ARE NO ROUGH EDGES.

LOAD LIMITS DURING CONSTRUCTION

1. IN ADDITION TO THE EXISTING LOADS, THE CONTRACTOR MAY PLACE AN ADDITIONAL LOAD OF UP TO 459 PSF AT THE TOP OF THE SLUDGE PIPE. THE EQUIPMENT TO BE USED DURING CONSTRUCTION SHALL BE ANALYZED FOR LOAD APPLIED AT THE SURFACE AND CONFIGURATION OF TRACKS, TIRES, ETC. TO MAKE SURE THAT LIMIT IS NOT EXCEEDED AT THE TOP OF THE SLUDGE PIPE.

2. NO ADDITIONAL LOAD OTHER THAN HL-93 LOADING CAN BE ADDED TO THE INTERCEPTOR DURING CONSTRUCTION. THE ZONE OF INFLUENCE FOR THE INTERCEPTOR IS CALLED OUT ON S-21. PILE DRIVING EQUIPMENT MUST STAY OUT OF THE ZONE OF INFLUENCE FOR THE INTERCEPTOR BUT MAY BE WITHIN THE ZONE OF INFLUENCE FOR THE SLUDGE PIPE AS LONG AS THE LOADS TO THE SLUDGE PIPE NOTED IN THE PARAGRAPH ABOVE ARE NOT EXCEEDED.

3. TRANSPORT OF EQUIPMENT AND SUPPLIES ALONG THE ACCESS ROAD FROM CABRILLO ROAD 800 FEET SOUTH OF THE SOUTHERNMOST FENCE LINE OF THE POINT LOMA WASTEWATER TREATMENT PLANT RUNNING NORTH TO THE PROJECT SITE IS LIMITED TO 80,000 POUNDS PER VEHICLE. IF THIS LOAD LIMIT OF 80,000 POUNDS PER VEHICLE IS UNACHIEVABLE, SUBMIT ALTERNATE PLAN WITH GROSS VEHICLE WEIGHT AND DISTRIBUTION FOR CONSIDERATION.

4. ALL EQUIPMENT TO BE USED IN THE VICINITY OF THE INTERCEPTOR AND SLUDGE PIPES MUST BE ANALYZED BY THE CONTRACTOR'S ENGINEER FOR LOADS APPLIED AT THE SURFACE AND THE CONFIGURATION OF TIRES, TRACKS, ETC. LOAD INCREASES MUST BE SUBMITTED FOR REVIEW.

GENERAL NOTES 2

S-02

CENTRAL AREA SMALL-SCALE FACILITY
STRUCTURAL
GENERAL NOTES 2

CITY OF SAN DIEGO, CALIFORNIA
ENGINEERING AND CAPITAL PROJECTS DEPARTMENT
SHEET 37 OF 264 SHEETS

WBS B-21151

CONSULTANT

Stantec
Brown AND Caldwell
Trussell TECHNOLOGIES INC
MARTIN & LIBBY STRUCTURAL ENGINEERS

REGISTERED PROFESSIONAL ENGINEER JEAN M. LIBBY No. 38412 Exp. 03-31-23 CIVIL STATE OF CALIFORNIA
12/09/22

APPROVED: FOR CITY ENGINEER ALICE ALTES — DATE 10-13-22
PRINT DCE NAME — RCE# C68286

DESCRIPTION	BY	APPROVED	DATE	FILMED
ORIGINAL	M&L		10/22	
ADDENDUM B	M&L		12/22	

SUBMITTED BY: JOSEPH QUICHO, PROJECT MANAGER
CHECKED BY: MICHAEL VIOLANTE, PROJECT ENGINEER
CCS27 COORDINATE
CCS83 COORDINATE
DRAWING NO. 0100179-37-D
S02

CONTRACTOR
INSPECTOR
NTP DATE
NOC DATE

B ADDED NOTE.

ADDENDUM B

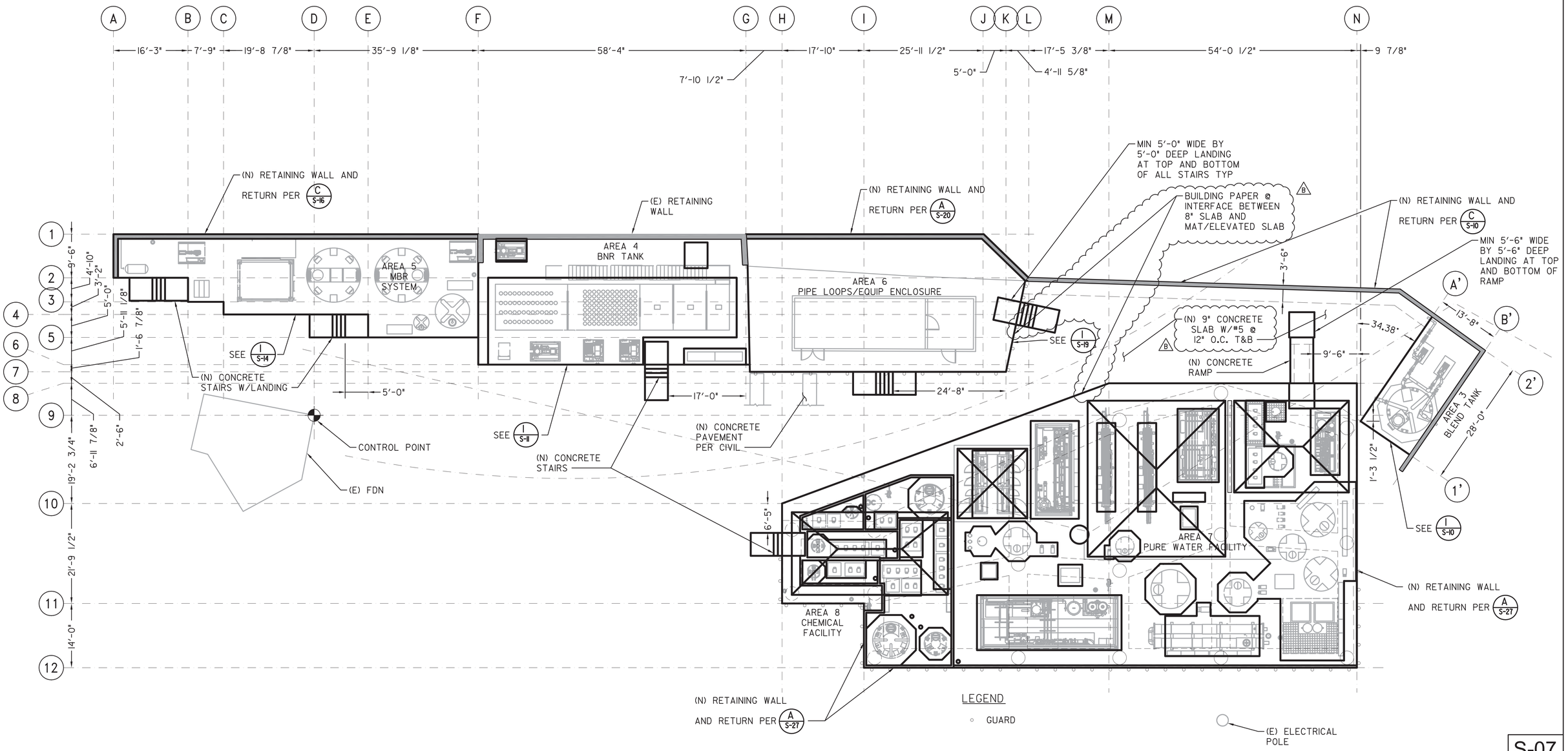

PLAN
SCALE: 3/32" = 1'-0"

S-07

CENTRAL AREA SMALL-SCALE FACILITY STRUCTURAL PLAN

CITY OF SAN DIEGO, CALIFORNIA
ENGINEERING AND CAPITAL PROJECTS DEPARTMENT
SHEET 42 OF 264 SHEETS

WBS B-21151

APPROVED: FOR CITY ENGINEER — 10-13-22 DATE
ALICE ALTES — C68286
PRINT DCE NAME — RCE#

SUBMITTED BY: JOSEPH QUICHO, PROJECT MANAGER
CHECKED BY: MICHAEL VIOLANTE, PROJECT ENGINEER

DESCRIPTION	BY	APPROVED	DATE	FILMED
ORIGINAL	M&L		10/22	
ADDENDUM B	M&L		12/22	

I86-I692 CCS27 COORDINATE
I826444-6250407 CCS83 COORDINATE
DRAWING NO. 0100179-42-D S07

CONSULTANT: Stantec; Brown AND Caldwell; Trussell TECHNOLOGIES INC; M&L MARTIN & LIBBY STRUCTURAL ENGINEERS

REGISTERED PROFESSIONAL ENGINEER — JEAN M. LIBBY — Exp. 03-31-23 — CIVIL — STATE OF CALIFORNIA
12/09/22

CONTRACTOR
INSPECTOR
NTP DATE
NOC DATE

B CHANGED CONCRETE PAVEMENT TO SLAB AND ADDED BUILDING PAPER NOTE.

ADDENDUM B

FILENAME: CASSF-S-07.DWG

EQUIPMENT ANCHORAGE SCHEDULE[1]

EQUIPMENT								DETAILS
ID	WEIGHT (LB)	WIDTH N-S	LENGTH E-W	DIAMETER	HEIGHT	'E'	ANCHORS	
5-1	500	4'-8"	2'-0"	N/A	4'-3"	6"	(4) 1/2"ø HILTI KB-TZ2 A304 SS EMB = 3 1/4" MIN	B S-17
5-2	2000	6'-6"	5'-0"	N/A	5'-9"	6"	(6) 5/8"ø HILTI KB-TZ2 A304 SS EMB = 4" MIN	D S-17
5-3	1500	3'-7"	3'-3"	N/A	3'-11"	6"	(4) 5/8"ø HILTI KB-TZ2 A304 SS EMB = 4" MIN	C S-17
5-4	55000	10'-0"	7'-1"	N/A	10'-6"	1'-0"	(12) 1"ø CIP ANCHORS EMB = 12" MIN	E S-17
5-5	115000	N/A	N/A	12'-0"	17'-3"	1'-0"	(24) 1 1/4"ø CIP ANCHORS EMB = 12" MIN	A S-18
5-6	115000	N/A	N/A	12'-0"	17'-3"	1'-0"	(24) 1 1/4"ø CIP ANCHORS EMB = 12" MIN	A S-18
5-7	30000	N/A	N/A	7'-6"	10'-6"	1'-0"	(16) 1"ø CIP ANCHORS EMB = 12" OR (16) 1"ø A304 HAS-R ATR W/HILTI HIT-RE 500 V3 EPOXY EMB = 12" MIN	B S-18
5-8	2000	6'-6"	5'-0"	N/A	5'-9"	6"	(6) 5/8"ø HILTI KB-TZ2 A304 SS EMB = 4" MIN	D S-17
5-9	7000	N/A	N/A	3'-4"	10'-0"	1'-0"	(12) 7/8"ø A304 HAS-R ATR W/HILTI HIT-RE 500 V3 EPOXY EMB = 10" MIN	C S-18

FOOTNOTES:

(1) ANCHORAGE PAD INFORMATION IS BASED ON EQUIPMENT INFORMATION PROVIDED TO M&L AT THE TIME OF DESIGN. CONTRACTOR SHALL SUBMIT FINAL EQUIPMENT INFORMATION TO M&L FOR APPROVAL PRIOR TO CONSTRUCTION. CONTRACTOR TO COORDINATE EQUIPMENT LOCATIONS W/APPROVED EQUIPMENT ANCHORAGE SUBMITTALS.

EQUIPMENT ANCHORAGE (A / S-14)
NO SCALE

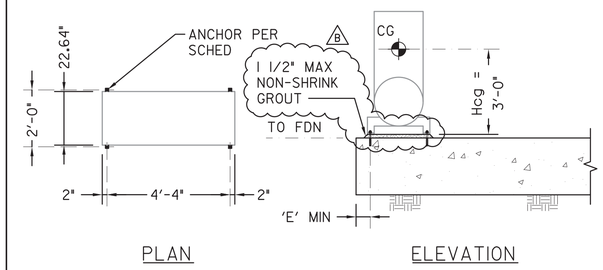

EQUIPMENT 5-1 AIR COMPRESSOR (B / -)
SCALE: 3/8" = 1'-0"

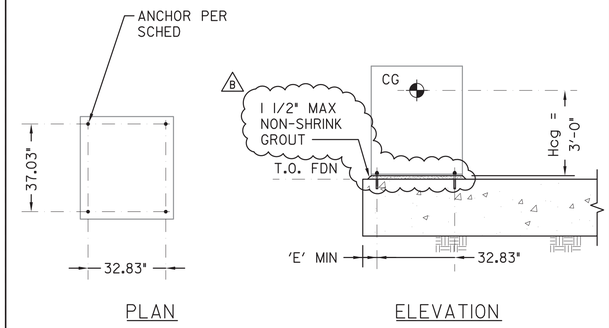

EQUIPMENT 5-3 AIR BLOWER (C / -)
SCALE: 3/8" = 1'-0"

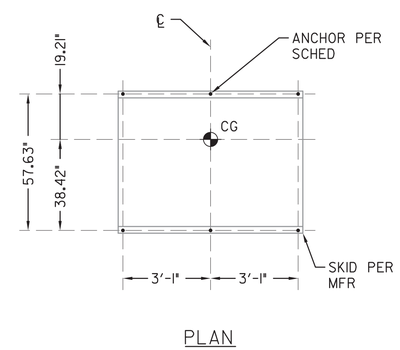

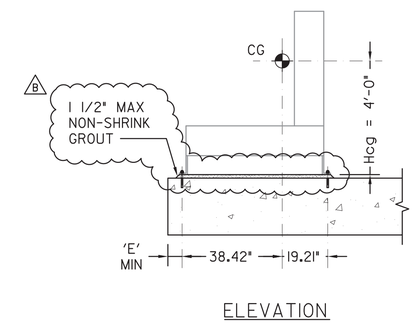

EQUIPMENT 5-2 & 5-8 FILTRATE PUMP SKID (D / -)
SCALE: 3/8" = 1'-0"

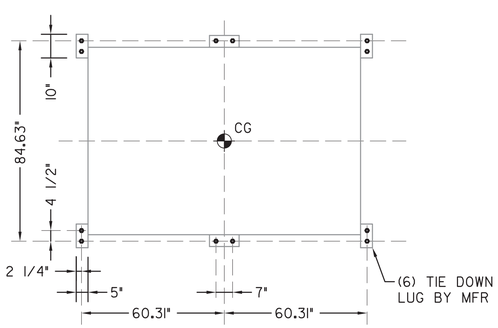

ANCHOR BOLT LAYOUT

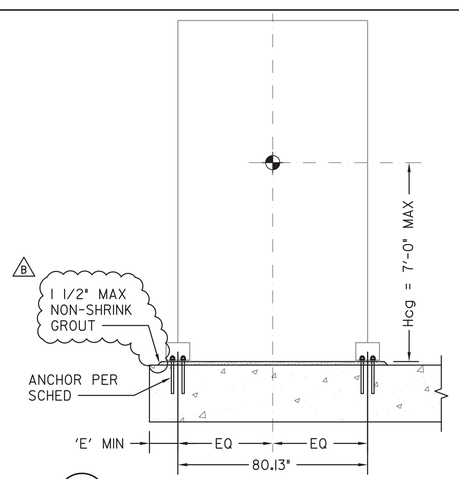

EQUIPMENT 5-4 MBR TANK (E / -)
SCALE: 3/8" = 1'-0"

S-17

CENTRAL AREA SMALL-SCALE FACILITY
STRUCTURAL
AREA 5 MBR SYSTEM EQUIPMENT
ANCHORAGE & PAD SCHEDULE

CITY OF SAN DIEGO, CALIFORNIA
ENGINEERING AND CAPITAL PROJECTS DEPARTMENT
SHEET 52 OF 264 SHEETS

WBS B-21151

CONSULTANT: Stantec; Brown AND Caldwell; Trussell TECHNOLOGIES INC; MARTIN & LIBBY STRUCTURAL ENGINEERS

REGISTERED PROFESSIONAL ENGINEER — JEAN M. LIBBY — No. 38412 — Exp. 03-31-23 — CIVIL — STATE OF CALIFORNIA — 12/09/22

APPROVED: FOR CITY ENGINEER — ALICE ALTES — PRINT DCE NAME — 10-13-22 DATE — C68286 RCE#

DESCRIPTION	BY	APPROVED	DATE	FILMED
ORIGINAL	M&L		10/22	
ADDENDUM B	M&L		12/22	

CONTRACTOR
INSPECTOR
NTP DATE
NOC DATE

SUBMITTED BY: JOSEPH QUICHO, PROJECT MANAGER
CHECKED BY: MICHAEL VIOLANTE, PROJECT ENGINEER
186-1692 CCS27 COORDINATE
1826444-6250407 CCS83 COORDINATE
DRAWING NO. 0100179-52-D
S17

AREA 5 MBR SYSTEM EQUIP ANCHORAGE & PAD SCHEDULE

B ADDED NON-SHRINK GROUT.

ADDENDUM B

FILENAME: CASSF-S-17.DWG

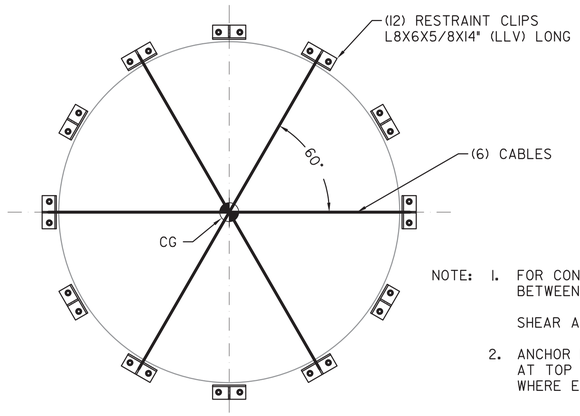

PLAN

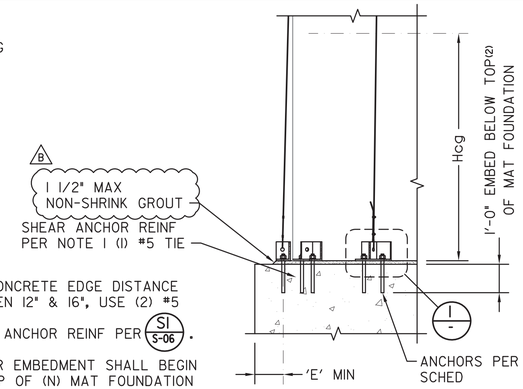

NOTE: 1. FOR CONCRETE EDGE DISTANCE BETWEEN 12" & 16", USE (2) #5 SHEAR ANCHOR REINF PER (S1/S-06).

2. ANCHOR EMBEDMENT SHALL BEGIN AT TOP OF (N) MAT FOUNDATION WHERE EQUIPMENT PAD OCCURS.

ELEVATION

EQUIPMENT 5-5 & 5-6
MBR FILTRATE TANK (A/-)
SCALE: 3/8" = 1'-0"

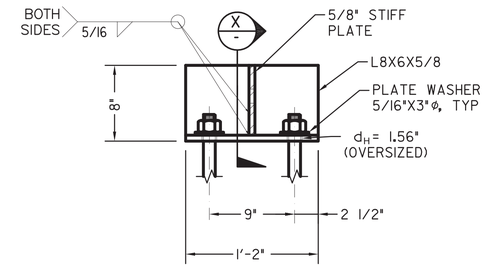

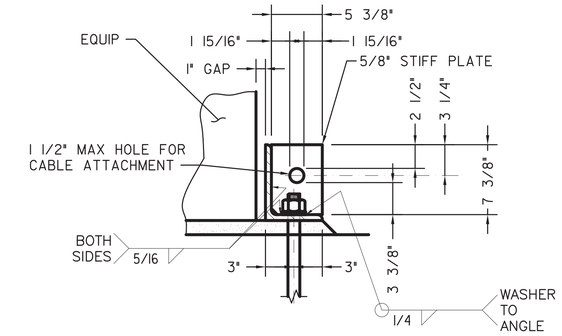

SCALE: 1 1/2" = 1'-0" (X/-)

RESTRAINT CLIP (1/-)
SCALE: 1 1/2" = 1'-0"

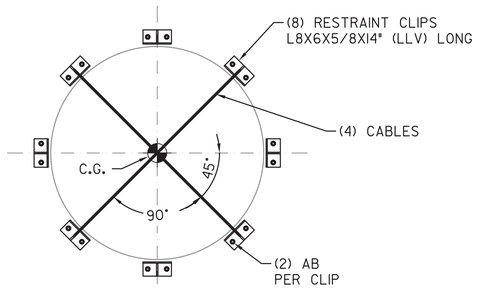

PLAN

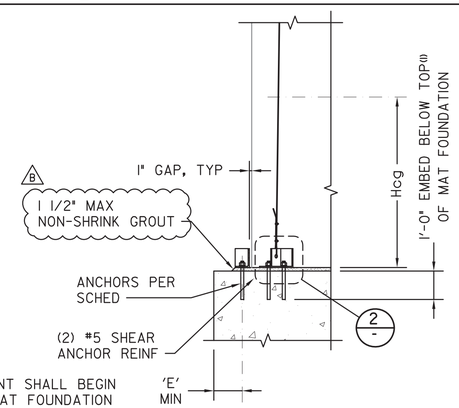

NOTE: 1. ANCHOR EMBEDMENT SHALL BEGIN AT TOP OF (N) MAT FOUNDATION WHERE EQUIPMENT PAD OCCURS.

ELEVATION

EQUIPMENT 5-7
PATHOGEN TEST TANK 1 (B/-)
SCALE: 3/8" = 1'-0"

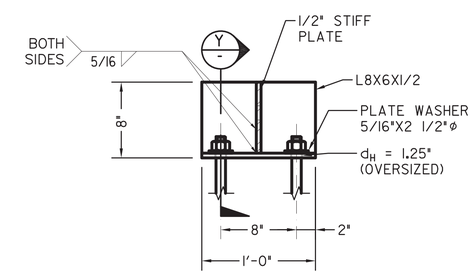

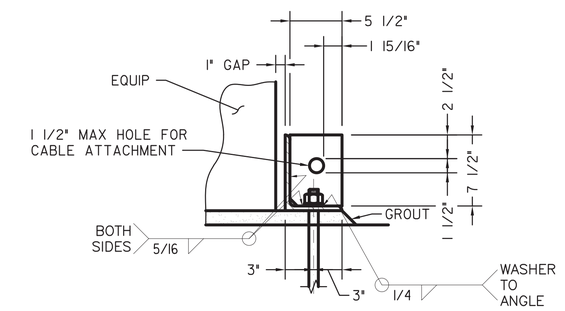

SCALE: 1 1/2" = 1'-0" (Y/-)

RESTRAINT CLIP (2/-)
SCALE: 1 1/2" = 1'-0"

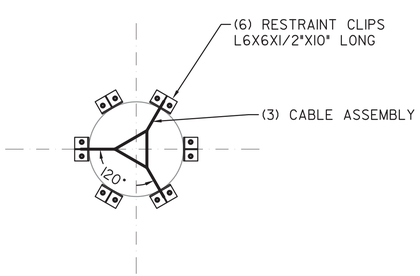

PLAN

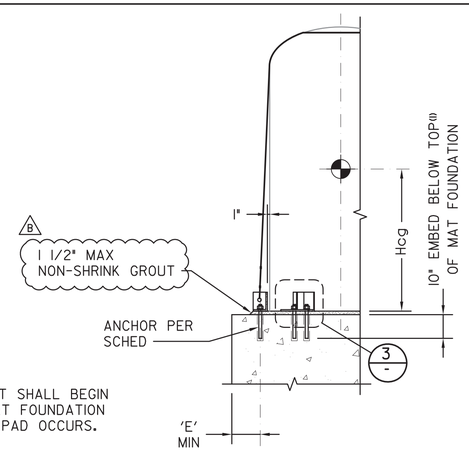

NOTE: 1. ANCHOR EMBEDMENT SHALL BEGIN AT TOP OF (N) MAT FOUNDATION WHERE EQUIPMENT PAD OCCURS.

ELEVATION

EQUIPMENT 5-9 TANK (C/-)
SCALE: 3/8" = 1'-0"

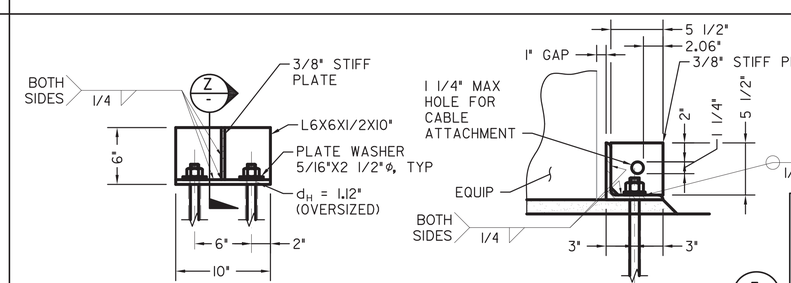

SCALE: 1 1/2" = 1'-0" (Z/-)

RESTRAINT CLIP (3/-)
SCALE: 1 1/2" = 1'-0"

S-18

CENTRAL AREA SMALL-SCALE FACILITY
STRUCTURAL
AREA 5 MBR SYSTEM
EQUIPMENT ANCHORAGE DETAILS

CITY OF SAN DIEGO, CALIFORNIA
ENGINEERING AND CAPITAL PROJECTS DEPARTMENT
SHEET 53 OF 264 SHEETS

WBS B-21151

CONSULTANT: Stantec; Brown AND Caldwell; Trussell TECHNOLOGIES INC; MARTIN & LIBBY STRUCTURAL ENGINEERS

REGISTERED PROFESSIONAL ENGINEER — LEAN M. LIBBY — No. 38412 — Exp. 03-31-23 — CIVIL — STATE OF CALIFORNIA — 12/09/22

APPROVED: FOR CITY ENGINEER ALICE ALTES — 10-13-22 DATE — C68286 RCE# — PRINT DCE NAME

SUBMITTED BY: JOSEPH QUICHO, PROJECT MANAGER
CHECKED BY: MICHAEL VIOLANTE, PROJECT ENGINEER

DESCRIPTION	BY	APPROVED	DATE	FILMED
ORIGINAL	M&L		10/22	
ADDENDUM B	M&L		12/22	

I86-I692 CCS27 COORDINATE
I826444-6250407 CCS83 COORDINATE

CONTRACTOR
INSPECTOR
NTP DATE
NOC DATE

DRAWING NO. 0100179-53-D — S18

AREA 5 MBR SYSTEM EQUIPMENT ANCHORAGE DETAILS

FILENAME: CASSF-S-18.DWG

B REVISED GROUT CALLOUT.

ADDENDUM B

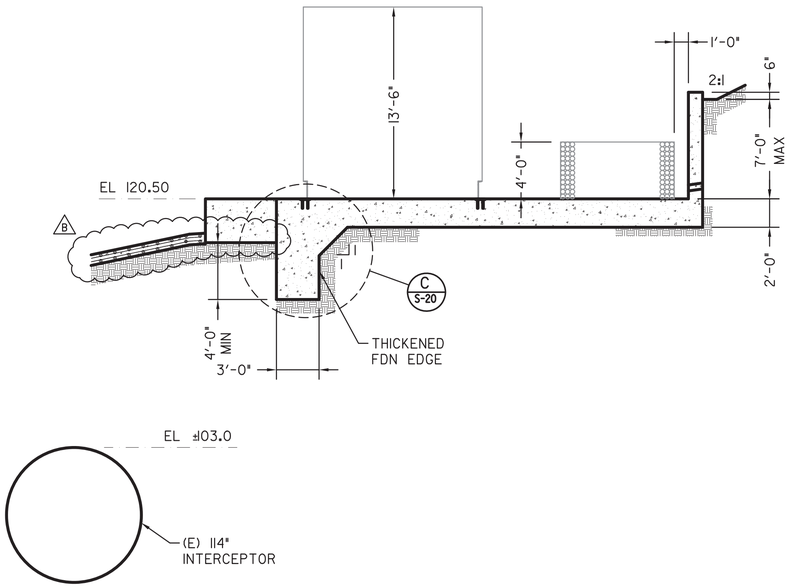

SECTION
SCALE: 3/16" = 1'-0"
A S-07

EQUIPMENT ANCHORAGE SCHEDULE(1)

EQUIPMENT							
ID	WEIGHT (LB)	WIDTH	LENGTH	DIAMETER	HEIGHT	'E'	DETAILS
6-1	5000	N/A	N/A	8'-0"	4'-0"	1'-6"	1 S-20
6-2	50000	12'-7"	40'-7"	N/A	13'-4"	1'-0"	D S-20

FOOTNOTES:

(1) ANCHORAGE AND EQUIPMENT PAD INFORMATION IS BASED ON EQUIPMENT INFORMATION PROVIDED TO M&L AT THE TIME OF DESIGN. CONTRACTOR SHALL SUBMIT FINAL EQUIPMENT INFORMATION TO M&L FOR APPROVAL PRIOR TO CONSTRUCTION. CONTRACTOR TO COORDINATE PAD LOCATIONS W/APPROVED EQUIPMENT ANCHORAGE SUBMITTALS.

EQUIPMENT ANCHORAGE
NO SCALE
B S-17

LEGEND: - CONCRETE WALL
- STEP IN FTG

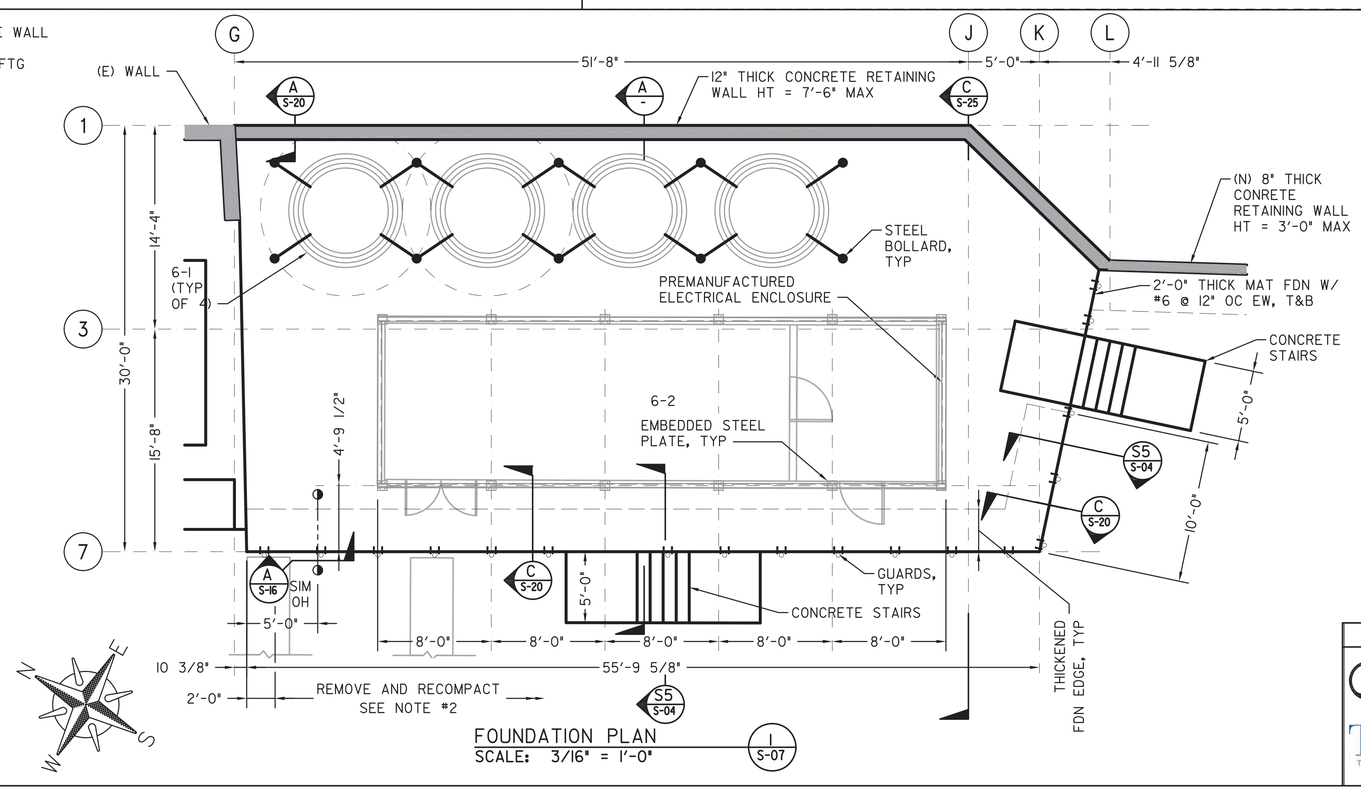

FOUNDATION PLAN
SCALE: 3/16" = 1'-0"
1 S-07

LEGEND/NOTES

- CONCRETE WALL
- STEP IN FTG

1. EQUIPMENT ID X-X
   - EQUIPMENT NO
   - AREA ID

   REFER TO EQUIPMENT SCHEDULE B - FOR EQUIPMENT INFORMATION AND ANCHORAGE.

2. DO NOT DISTURB SOIL WITHIN 2'-0" OF AREA 4 (E) MAT FOUNDATION. REMOVE & RECOMPACT SOIL BEYOND THE 2'-0" LIMIT.

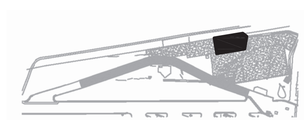

KEY MAP

S-19

CENTRAL AREA SMALL-SCALE FACILITY
STRUCTURAL
AREA 6 PIPE LOOPS/EQUIP ENCLOSURE
PLAN, SECTION & DETAIL

CITY OF SAN DIEGO, CALIFORNIA
ENGINEERING AND CAPITAL PROJECTS DEPARTMENT
SHEET 54 OF 264 SHEETS

WBS B-21151

APPROVED BY: FOR CITY ENGINEER — DATE 10-13-22
ALICE ALTES — RCE# C68286
PRINT DCE NAME

SUBMITTED BY: JOSEPH QUICHO, PROJECT MANAGER
CHECKED BY: MICHAEL VIOLANTE, PROJECT ENGINEER

DESCRIPTION	BY	APPROVED	DATE	FILMED
ORIGINAL	M&L		10/22	
ADDENDUM B	M&L		12/22	

186-1692
CCS27 COORDINATE
1826444-6250407
CCS83 COORDINATE
DRAWING NO. 0100179-54-D
S19

CONSULTANT
Stantec
Brown AND Caldwell
Trussell TECHNOLOGIES INC
MARTIN & LIBBY STRUCTURAL ENGINEERS

REGISTERED PROFESSIONAL ENGINEER JEAN M. LIBBY No. 38412 Exp. 03-31-23 CIVIL STATE OF CALIFORNIA
12/09/22

CONTRACTOR
INSPECTOR
NTP DATE
NOC DATE

B CHANGED CONCRETE PAVEMENT TO SLAB AND INCREASED STAIR DEPTH.

AREA 6 PIPE LOOPS/EQUIP ENCLOSURE PLANS, SECTION & DETAIL

FILENAME: CASSF-S-19.DWG

ADDENDUM B

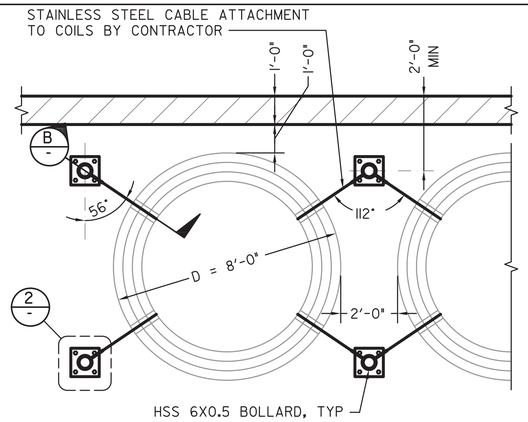

EQUIPMENT 6-1 COILED LOOP PIPES (1 / S-19)
SCALE: 3/8" = 1'-0"

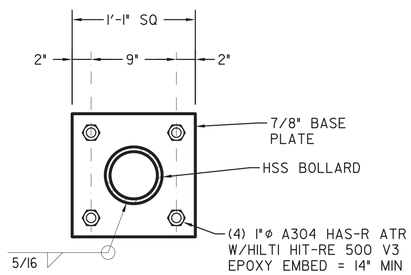

HSS BOLLARD BASE PLATE ANCHORAGE (2 / -)
SCALE: 1 1/2" = 1'-0"

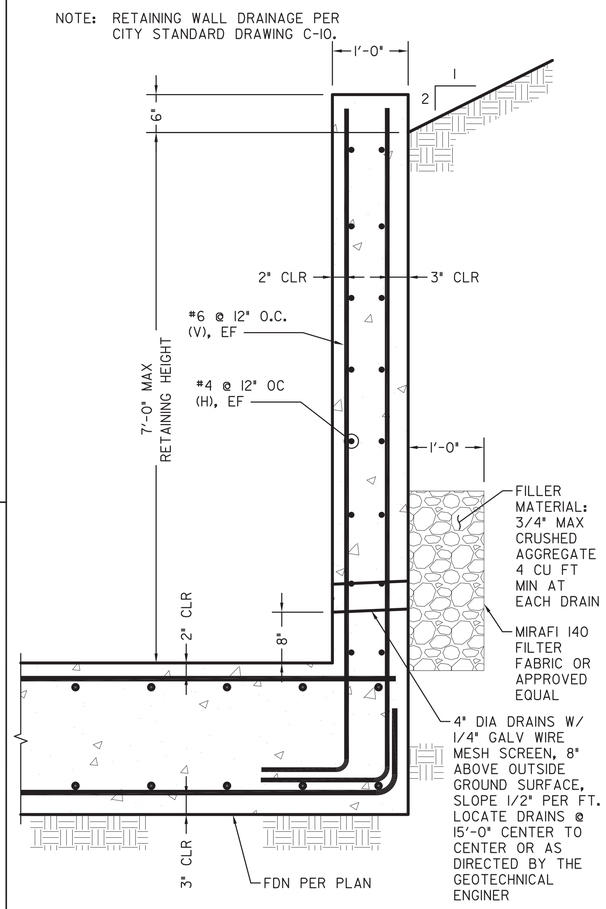

7'-6" MAX CONCRETE RETAINING WALL SECTION (A / S-19)
SCALE: 1" = 1'-0"

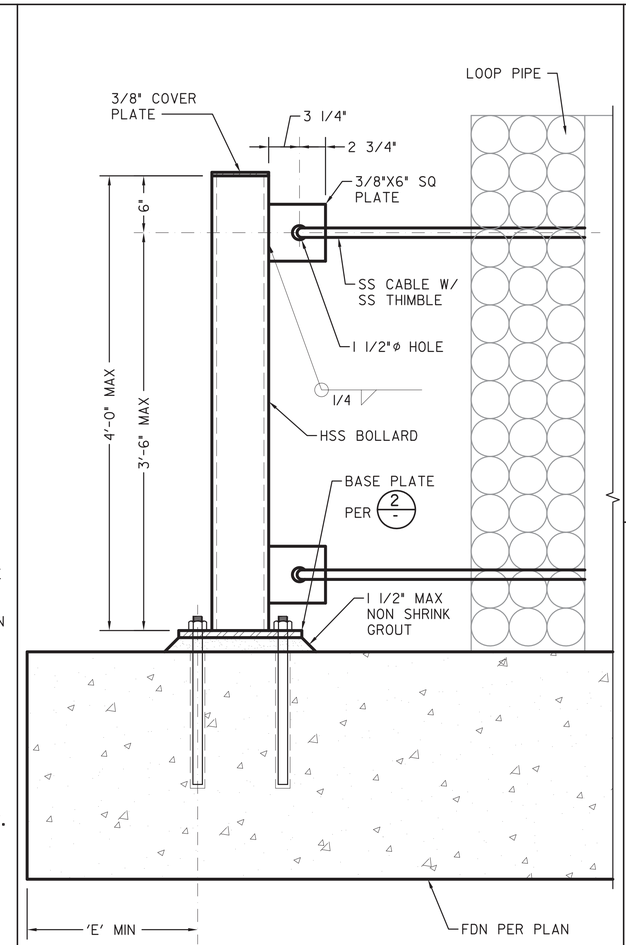

NOTE: ALL STEEL TO BE HOT DIP GALVANIZED UON.

HSS BOLLARD DETAIL (B / -)
SCALE: 1 1/2" = 1'-0"

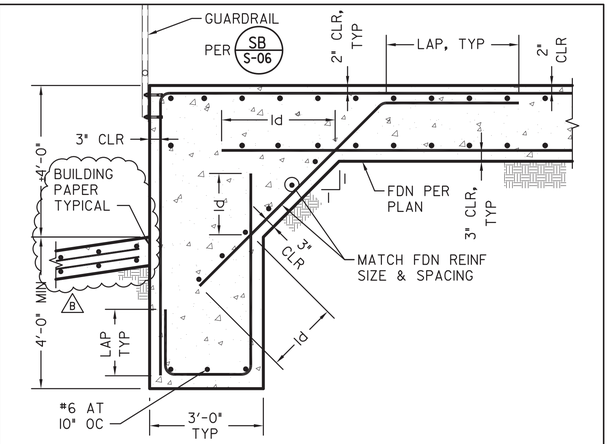

THICKENED FDN EDGE REINFORCMENT DETAIL (C / S-19)
SCALE: 1/2" = 1'-0"

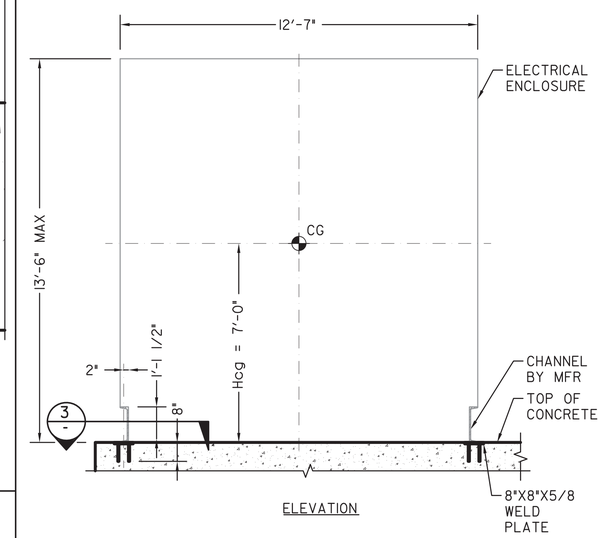

ELEVATION

NOTE: LOCATE EQUIPMENT PER MECHANICAL.

EQUIPMENT 6-2 ELECTRICAL ENCLOSURE (D / S-19)
SCALE: 3/8" = 1'-0"

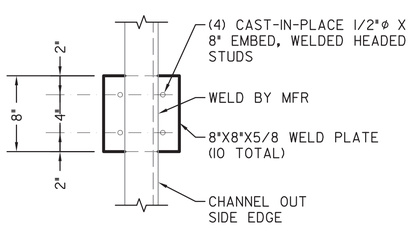

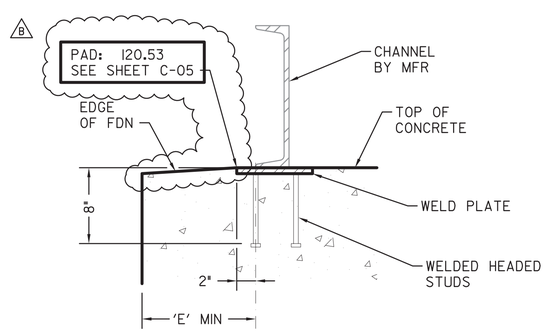

NOTE: ALL STEEL TO BE HOT DIP GALVANIZED, UON, TYP.

EQUIPMENT 6-2 BASE PLATE ANCHORAGE (3 / -)
SCALE: 1 1/2" = 1'-0"

S-20

CENTRAL AREA SMALL-SCALE FACILITY
STRUCTURAL
AREA 6 PIPE LOOPS/EQUIP ENCLOSURE
SECTIONS & CONC ANCHORAGE DETAILS

CITY OF SAN DIEGO, CALIFORNIA
ENGINEERING AND CAPITAL PROJECTS DEPARTMENT
SHEET 55 OF 264 SHEETS

WBS B-21151

CONSULTANT: Stantec; Brown AND Caldwell; Trussell TECHNOLOGIES INC; M&L MARTIN & LIBBY STRUCTURAL ENGINEERS

REGISTERED PROFESSIONAL ENGINEER — ALAN M. LIBBY — No. 38412 — Exp. 03-31-2023 — CIVIL — STATE OF CALIFORNIA — 12/09/22

APPROVED: FOR CITY ENGINEER — 10-13-22 DATE
ALICE ALTES — PRINT DCE NAME — C68286 RCE#

DESCRIPTION	BY	APPROVED	DATE	FILMED
ORIGINAL	M&L		10/22	
ADDENDUM B	M&L		12/22	

CONTRACTOR — NTP DATE
INSPECTOR — NOC DATE

SUBMITTED BY: JOSEPH QUICHO, PROJECT MANAGER
CHECKED BY: MICHAEL VIOLANTE, PROJECT ENGINEER
I86-I692 CCS27 COORDINATE
I826444-6250407 CCS83 COORDINATE
DRAWING NO. 0100179-55-D — S20

AREA 6 PIPE LOOPS/EQUIP ENCLOSURE SECTIONS & CONC ANCHORAGE DETAILS

B CHANGED CONCRETE PAVEMENT TO SLAB, ADDED BUILDING PAPER AND PAD NOTE.

ADDENDUM B

FILENAME: CASSF-S-20.DWG

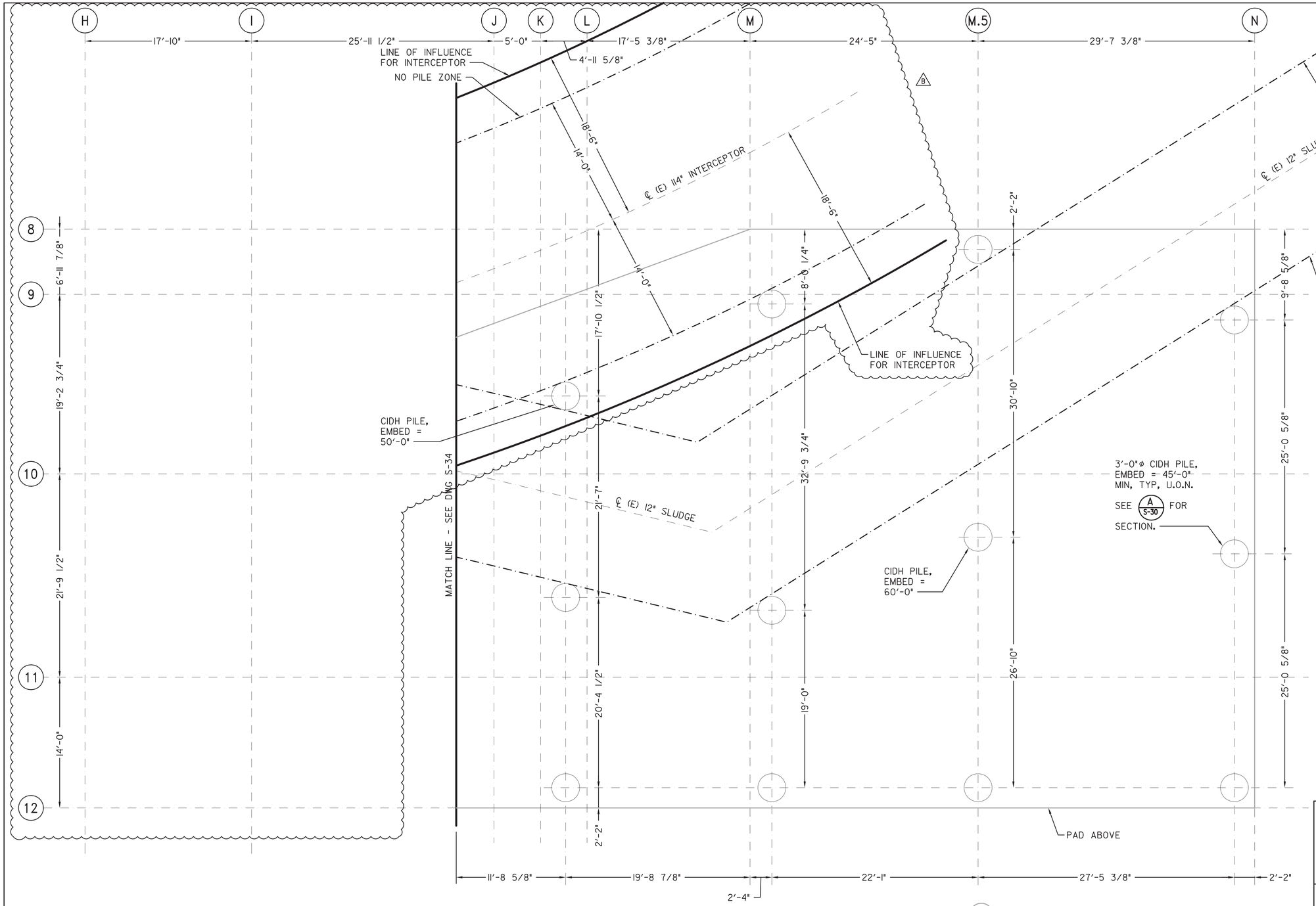

PILE PLAN
SCALE: 3/16" = 1'-0"
1 / S-07

NOTE: (E) ELECTRICAL LINES ALONG GRID M.5 SUPPLY ENTIRE FACILITY AND CANNOT BE MOVED. ACCESS FOR DRILLING THESE THREE PILES MAY BE IMPACTED. SEE CIVIL DRAWINGS FOR MORE INFORMATION.

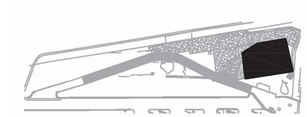

KEY MAP

S-21

CENTRAL AREA SMALL-SCALE FACILITY
STRUCTURAL
AREA 7 PURE WATER FACILITY
PILE PLAN

CITY OF SAN DIEGO, CALIFORNIA
ENGINEERING AND CAPITAL PROJECTS DEPARTMENT
SHEET 56 OF 264 SHEETS

WBS B-21151

CONSULTANT

Stantec
Brown AND Caldwell
Trussell TECHNOLOGIES INC
MARTIN & LIBBY STRUCTURAL ENGINEERS

REGISTERED PROFESSIONAL ENGINEER — JEAN M. LIBBY — No. 38412 — Exp. 03-31-23 — CIVIL — STATE OF CALIFORNIA
12/09/22

APPROVED: FOR CITY ENGINEER ALICE ALTES — 10-13-22 DATE — C68286 RCE#
PRINT DCE NAME

DESCRIPTION	BY	APPROVED	DATE	FILMED
ORIGINAL	M&L		10/22	
ADDENDUM B	M&L		12/22	

CONTRACTOR
INSPECTOR
NTP DATE
NOC DATE

SUBMITTED BY: JOSEPH QUICHO, PROJECT MANAGER
CHECKED BY: MICHAEL VIOLANTE, PROJECT ENGINEER
I86-I692 CCS27 COORDINATE
I826444-6250407 CCS83 COORDINATE
DRAWING NO. 0100179-56-D
S21

AREA 7 PURE WATER FACILITY PILE PLAN

FILENAME: CASSF-S-21.DWG

B ADDED GRID LINES, LINE OF INFLUENCE FOR INTERCEPTOR & BOX AROUND NOTE.

ADDENDUM B

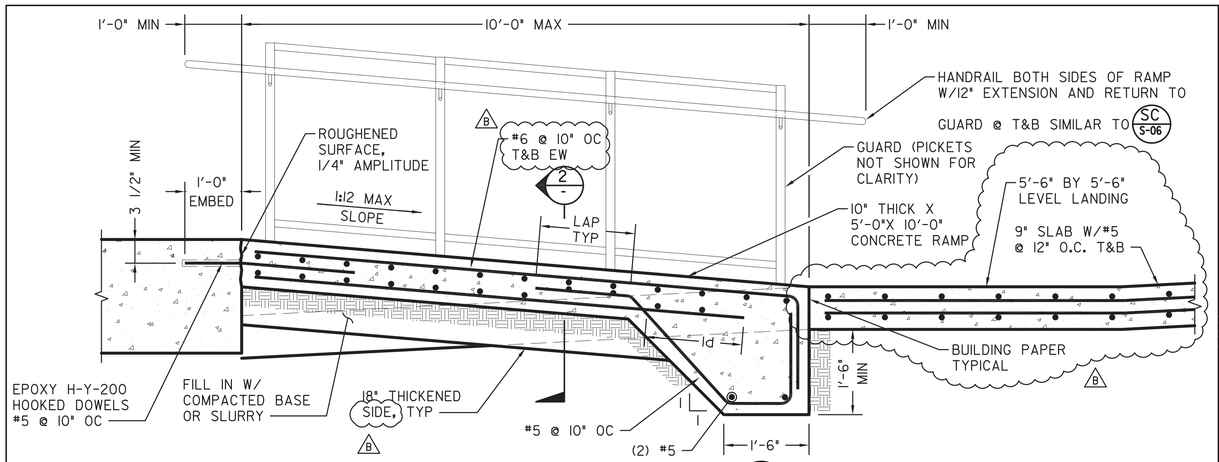

CONCRETE RAMP
SCALE: 3/4" = 1'-0"
A S-22

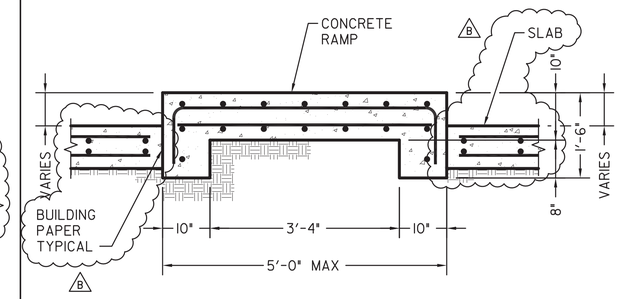

CONCRETE RAMP SECTION
SCALE: 3/4" = 1'-0"
2 -

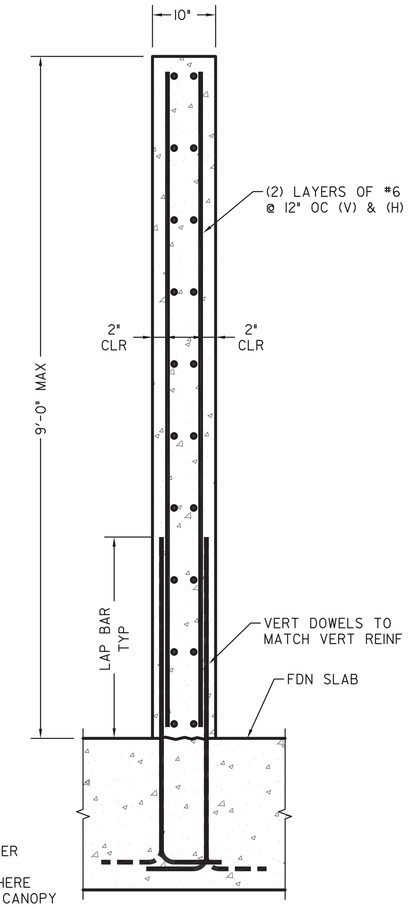

NOTE: CANTILEVER WALL 1'-0" MAX HORIZONTALLY WHERE WALL OVERLAPS CANOPY BASEPLATES AT ENDS.

FREE STANDING PARTITION CONCRETE WALL
SCALE: 1" = 1'-0"
B S-35

S-26

CENTRAL AREA SMALL-SCALE FACILITY
STRUCTURAL
AREA 7 PURE WATER FACILITY
RAMP AND WALL DETAILS

CITY OF SAN DIEGO, CALIFORNIA
ENGINEERING AND CAPITAL PROJECTS DEPARTMENT
SHEET 61 OF 264 SHEETS

WBS B-21151

APPROVED: FOR CITY ENGINEER — DATE 10-13-22
ALICE ALTES — PRINT DCE NAME — RCE# C68286

SUBMITTED BY: JOSEPH QUICHO, PROJECT MANAGER
CHECKED BY: MICHAEL VIOLANTE, PROJECT ENGINEER

DESCRIPTION	BY	APPROVED	DATE	FILMED
ORIGINAL	M&L		10/22	
ADDENDUM B	M&L		12/22	

CCS27 COORDINATE: 186-1692
CCS83 COORDINATE: 1826444-6250407
DRAWING NO. 0100179-61-D — S26

CONSULTANT: Stantec, Brown AND Caldwell, Trussell TECHNOLOGIES INC, MARTIN & LIBBY STRUCTURAL ENGINEERS

REGISTERED PROFESSIONAL ENGINEER — JEAN M. LIBBY — No. 38412 — (Exp) 03-31-23 — CIVIL — STATE OF CALIFORNIA
12/09/22

CONTRACTOR — NTP DATE
INSPECTOR — NOC DATE

AREA 7 PURE WATER FACILITY RAMP AND WALL DETAILS

FILENAME: CASSF-S-26.DWG

B CHANGED CONCRETE PAVEMENT TO SLAB, REBAR SIZE AND NOTE CALLOUTS, AND ADDED BUILDING PAPER.

ADDENDUM B

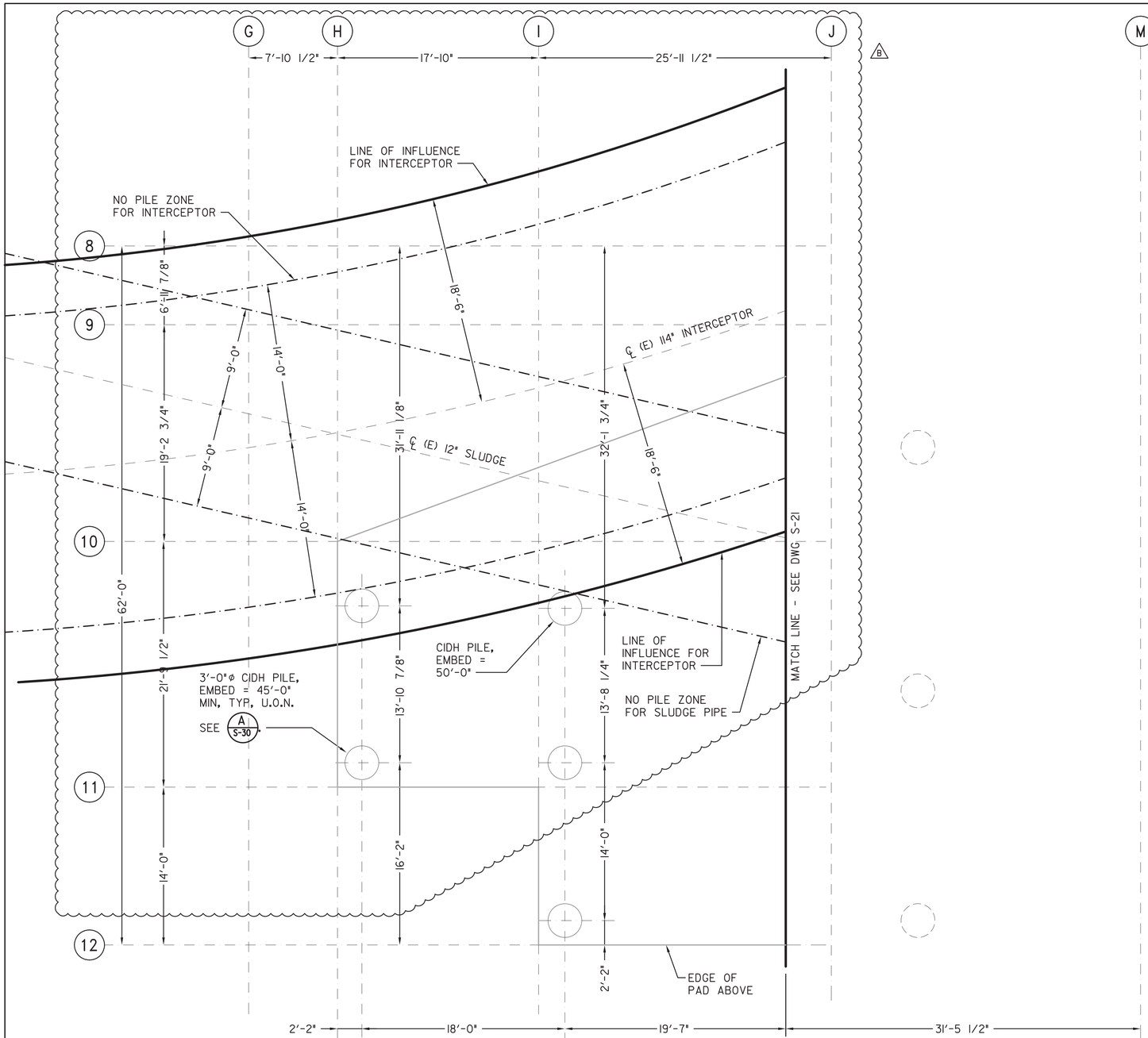

NOTE: DEMOLISH (E) SLAB IN THIS AREA.

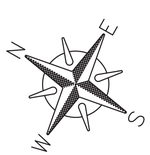

PILE PLAN
SCALE: 3/16" = 1'-0"
1 / S-07

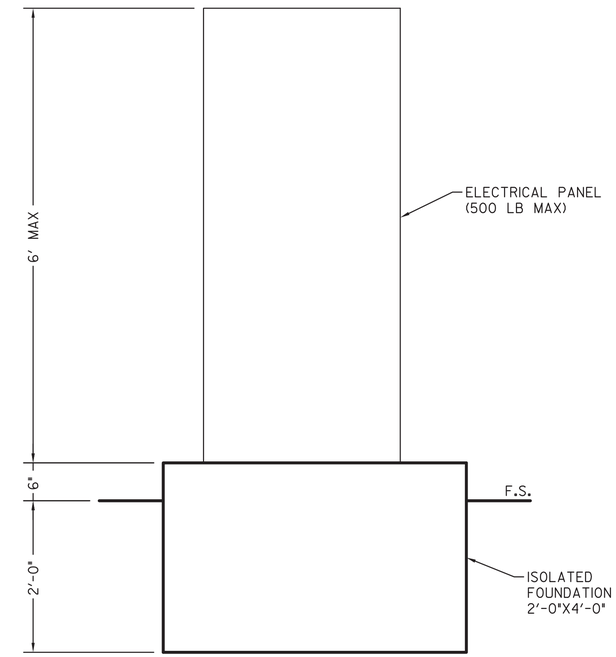

ELECTRICAL PANEL FOUNDATION
SCALE: 1" = 1'-0"
A / S-07

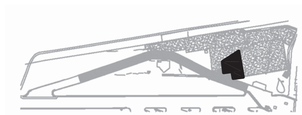

KEY MAP

S-34

CENTRAL AREA SMALL-SCALE FACILITY
STRUCTURAL
AREA 8 CHEMICAL FACILITY
PILE PLAN

CITY OF SAN DIEGO, CALIFORNIA
ENGINEERING AND CAPITAL PROJECTS DEPARTMENT
SHEET 69 OF 264 SHEETS

WBS B-21151

APPROVED: FOR CITY ENGINEER ALICE ALTES (PRINT DCE NAME) — DATE 10-13-22 — RCE# C68286

SUBMITTED BY: JOSEPH QUICHO, PROJECT MANAGER
CHECKED BY: MICHAEL VIOLANTE, PROJECT ENGINEER

DESCRIPTION	BY	APPROVED	DATE	FILMED
ORIGINAL	M&L		10/22	
ADDENDUM B	M&L		12/22	

I86-1692 CCS27 COORDINATE
1826444-6250407 CCS83 COORDINATE

DRAWING NO. 0100179-69-D — S34

CONSULTANT: Stantec, Brown AND Caldwell, Trussell TECHNOLOGIES INC, MARTIN & LIBBY STRUCTURAL ENGINEERS

REGISTERED PROFESSIONAL ENGINEER — SEAN M. LIBBY — No. 38412 — Exp. 03-31-23 — CIVIL — STATE OF CALIFORNIA
12/09/22

CONTRACTOR ____ NTP DATE ____
INSPECTOR ____ NOC DATE ____

B ADDED GRID LINES & LINE OF INFLUENCE FOR INTERCEPTOR.

ADDENDUM B

AREA 8 CHEMICAL FACILITY PILE PLAN

FILENAME: CASSF-S-34.DWG

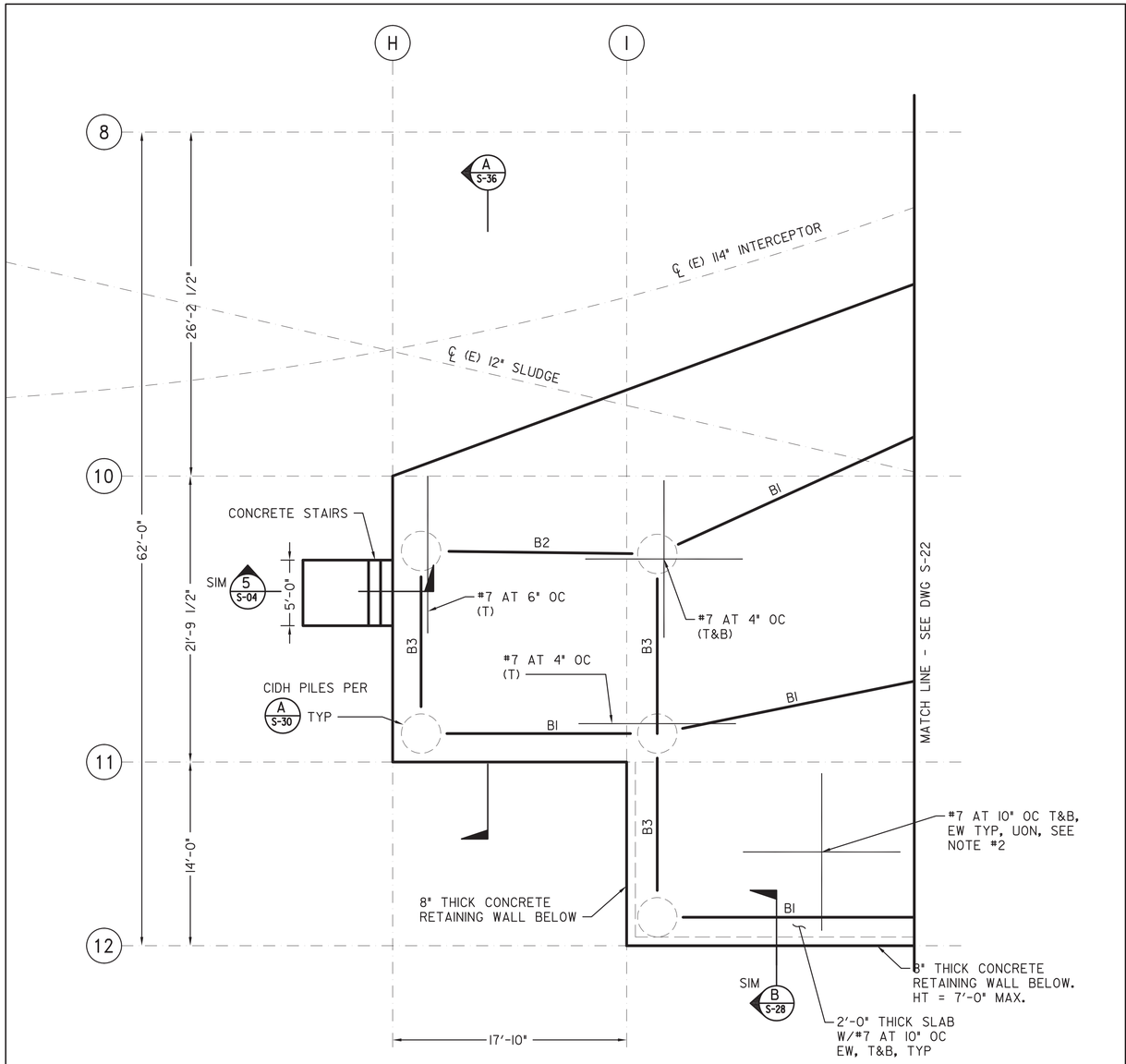

NOTES:
1. DEMOLISH (E) SLAB IN THIS AREA.
2. ALL INCREASED SLAB REINF AT PILES SHALL EXTEND 13'-0" MIN BEYOND FACE OF PILE, UON. SEE (4 / S-28). LAP W/#7 @ 10" O.C.

TYP REINF. NONCONTACT LAP SPLICE IS ACCEPTABLE.

SLAB REINF PLAN (1 / S-07)
SCALE: 3/16" = 1'-0"

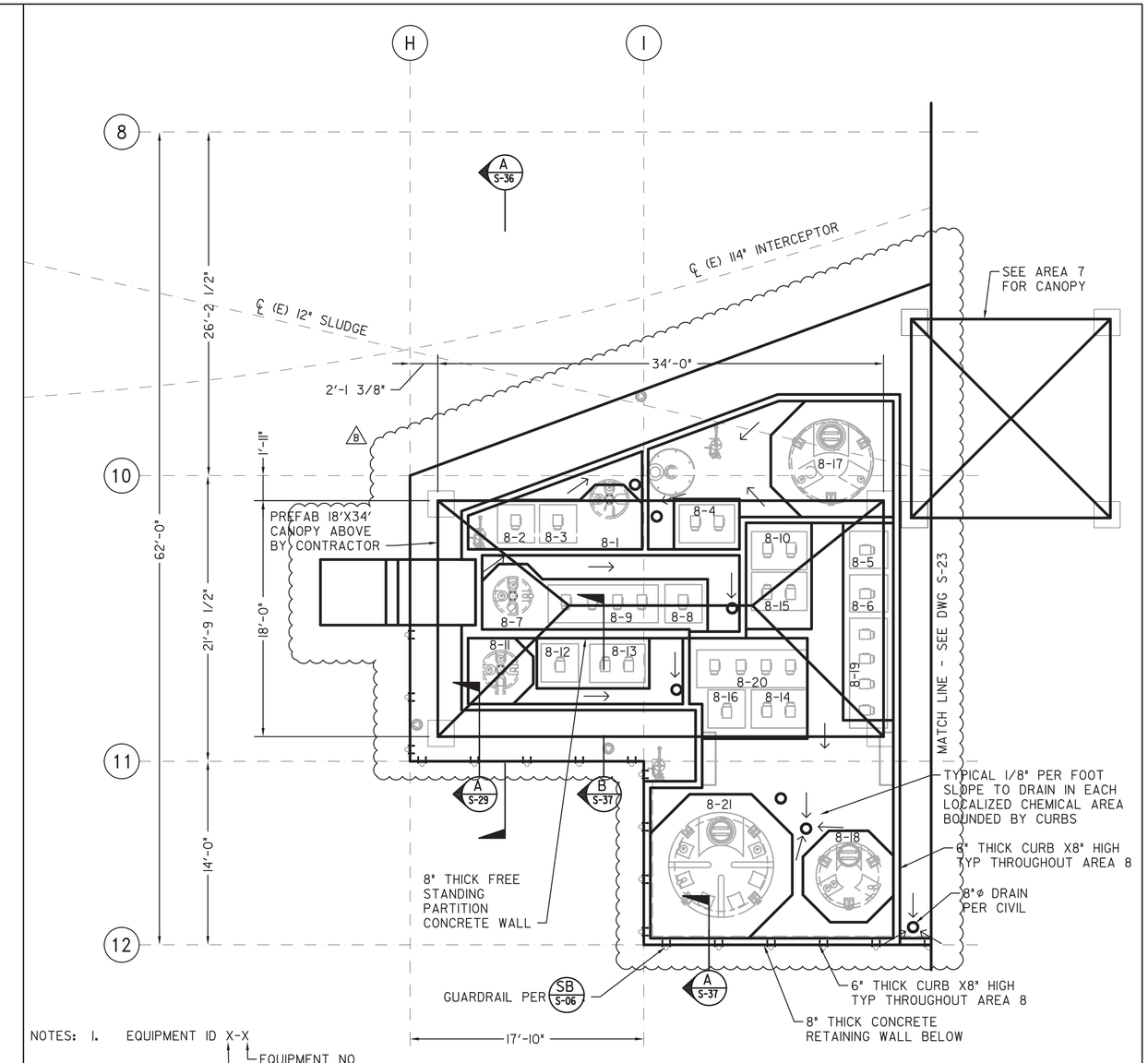

NOTES:
1. EQUIPMENT ID X-X
   - EQUIPMENT NO
   - AREA ID

   REFER TO EQUIPMENT SCHEDULE (A / S-38) FOR EQUIPMENT INFORMATION AND ANCHORAGE.
2. U.O.N. MECHANICAL EQUIP TO BE CENTERED ON PAD. SEE MECHANICAL DRAWINGS FOR LOCATION OF EQUP.
3. SEE (B / S-36) AND (B / S-38) FOR CANOPY ANCHORAGE.

EQUIPMENT & CANOPY PLAN (2 / S-07)
SCALE: 3/16" = 1'-0"

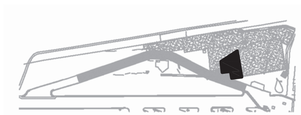

KEY MAP

CONSULTANT

Stantec
Brown AND Caldwell
Trussell TECHNOLOGIES INC
M&L MARTIN & LIBBY STRUCTURAL ENGINEERS

REGISTERED PROFESSIONAL ENGINEER JEAN M. LIBBY No. 28412 Exp. 03-31-23 CIVIL STATE OF CALIFORNIA
12/09/22

S-35

CENTRAL AREA SMALL-SCALE FACILITY
STRUCTURAL
AREA 8 CHEMICAL FACILITY
SLAB REINF, EQUIP & CANOPY PLANS

CITY OF SAN DIEGO, CALIFORNIA
ENGINEERING AND CAPITAL PROJECTS DEPARTMENT
SHEET 70 OF 264 SHEETS

WBS B-21151

APPROVED: FOR CITY ENGINEER ALICE ALTES (PRINT DCE NAME) — DATE 10-13-22 — RCE# C68286

DESCRIPTION	BY	APPROVED	DATE	FILMED
ORIGINAL	M&L		10/22	
ADDENDUM B	M&L		12/22	

SUBMITTED BY: JOSEPH QUICHO, PROJECT MANAGER
CHECKED BY: MICHAEL VIOLANTE, PROJECT ENGINEER
I86-I692 CCS27 COORDINATE
I826444-6250407 CCS83 COORDINATE
DRAWING NO. 0100179-70-D — S35

CONTRACTOR
INSPECTOR
NTP DATE
NOC DATE

AREA 8 CHEMICAL FACILITY SLAB REINF, EQUIP & CANOPY PLANS

FILENAME: CASSF-S-35.DWG

(B) MOVED REFERENCE FILES BACK INTO CORRECT POSITION.

ADDENDUM B

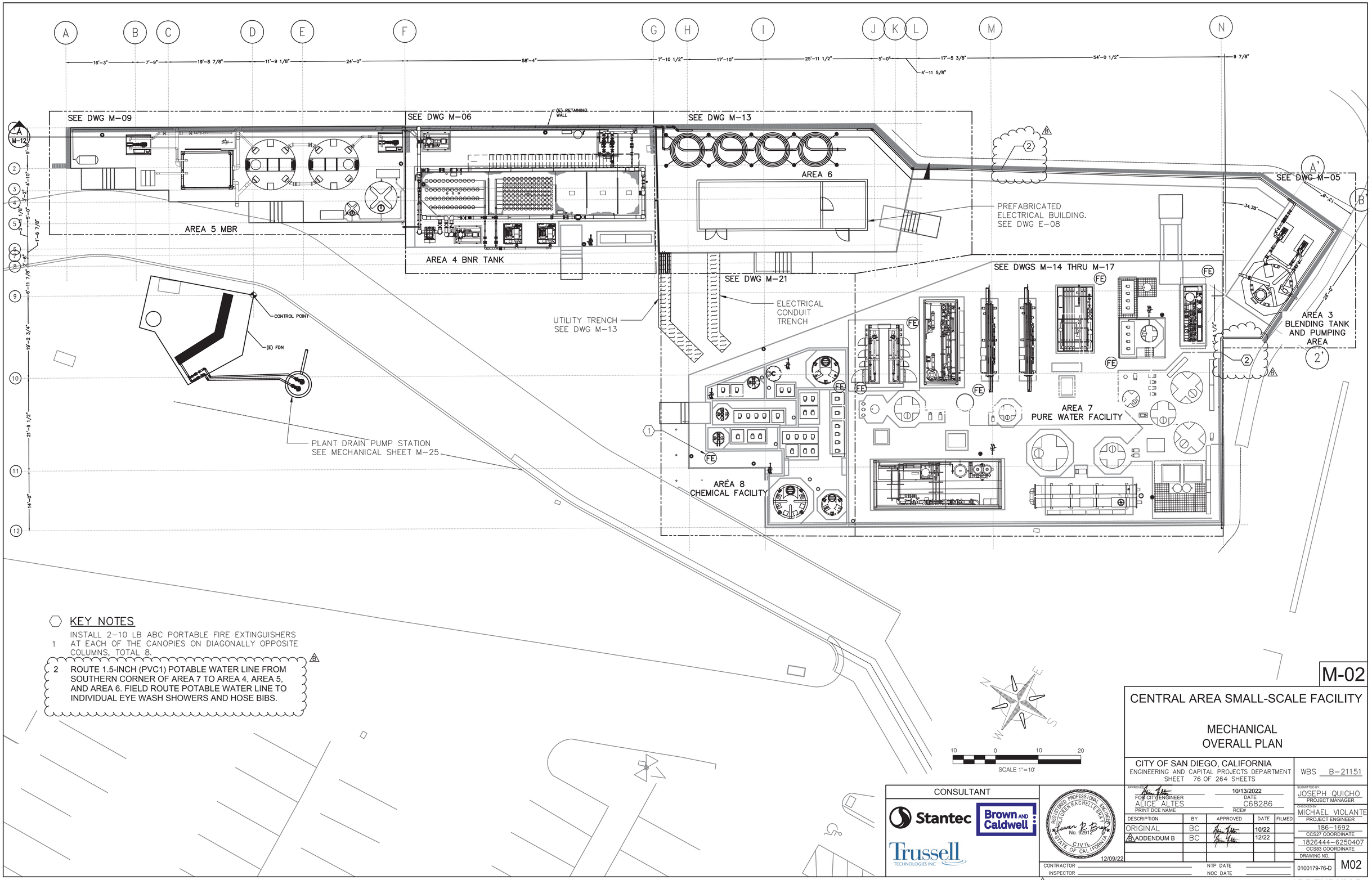

OVERALL PLAN

KEY NOTES

1 INSTALL 2-10 LB ABC PORTABLE FIRE EXTINGUISHERS AT EACH OF THE CANOPIES ON DIAGONALLY OPPOSITE COLUMNS, TOTAL 8.

2 ROUTE 1.5-INCH (PVC1) POTABLE WATER LINE FROM SOUTHERN CORNER OF AREA 7 TO AREA 4, AREA 5, AND AREA 6. FIELD ROUTE POTABLE WATER LINE TO INDIVIDUAL EYE WASH SHOWERS AND HOSE BIBS.

M-02

CENTRAL AREA SMALL-SCALE FACILITY

MECHANICAL OVERALL PLAN

CITY OF SAN DIEGO, CALIFORNIA
ENGINEERING AND CAPITAL PROJECTS DEPARTMENT
SHEET 76 OF 264 SHEETS

WBS B-21151

CONSULTANT: Stantec, Brown AND Caldwell, Trussell TECHNOLOGIES INC

REGISTERED PROFESSIONAL ENGINEER LAUREN RACHELLE BARGE No. 82912 CIVIL STATE OF CALIFORNIA 12/09/22

APPROVED: FOR CITY ENGINEER 10/13/2022 DATE
ALICE ALTES C68286
PRINT DCE NAME RCE#

SUBMITTED BY: JOSEPH QUICHO PROJECT MANAGER
CHECKED BY: MICHAEL VIOLANTE PROJECT ENGINEER

DESCRIPTION	BY	APPROVED	DATE	FILMED
ORIGINAL	BC		10/22	
B ADDENDUM B	BC		12/22	

186-1692 CCS27 COORDINATE
1826444-6250407 CCS83 COORDINATE

CONTRACTOR NTP DATE
INSPECTOR NOC DATE

DRAWING NO. 0100179-76-D M02

FILENAME: CASSF-M-02.DWG

B ADDED KEYNOTE 2 AND ROUTING OF 1.5-INCH POTABLE WATER LINE TO AREAS 4, 5, AND 6

ADDENDUM B

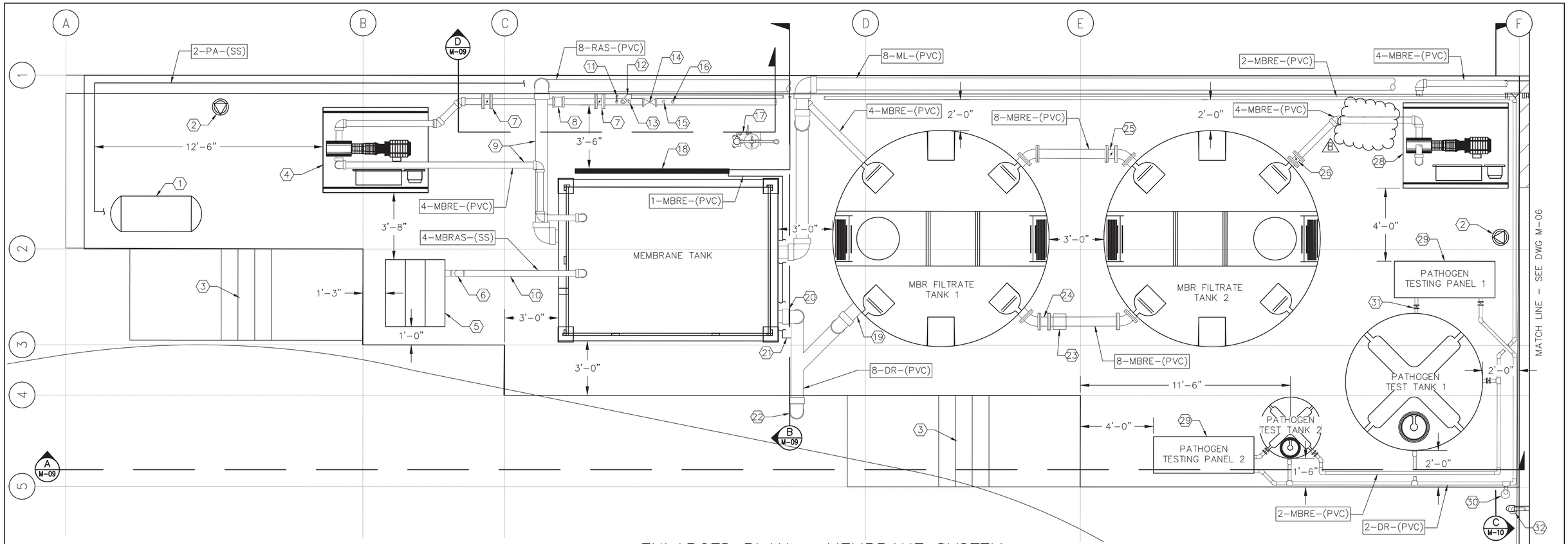

ENLARGED PLAN – MEMBRANE SYSTEM

SCALE: 3/8"=1'-0"

AREA 5 MBR SYSTEM ENLARGED PLAN

GENERAL NOTES

1. PIPING SUPPORTS ARE DEFERRED DESIGN AND SHALL BE BY THE CONTRACTOR'S PIPE SUPPORT DESIGNER PER SECTION 40 05 07. ANY SUPPORTS SHOWN ON DRAWINGS INCLUDING PIPE SUPPORT DETAILS ARE FOR VISUAL AND SPATIAL REFERENCE ONLY.

2. EQUIPMENT PROVIDED BY BNR/MBR SYSTEM SUPPLIER PER SPECIFICATIONS 46 41 40 AND 46 61 33.

KEY NOTES

1. CASSF AIR COMPRESSOR. ME-200. FIELD ROUTE 2-INCH PLANT AIR TO COMPRESSOR.
2. UTILITY STATION PER DETAIL M5021.
3. ACCESS STAIRWAY. SEE STRUCTURAL DRAWINGS FOR ADDITIONAL INFORMATION.
4. MBR SYSTEM FILTRATE/BACKWASH PUMP. P-510.
5. MBR AIR SCOUR BLOWER SKID. BLR-530.
6. MBR AIR SCOUR BLOWER SHIPPED LOOSE INSTRUMENTATION. PIT-530, FIT-530, AND POV-501.
7. 4-INCH BUTTERFLY VALVES. VF-510A, VF-510B.
8. 4-INCH FLOW METER. FIT-411.
9. ROUTE PIPES OVERHEAD TO ALLOW FOR ACCESS EAST OF MEMBRANE TANK.
10. ROUTE PIPES OVERHEAD.
11. 1-INCH MBR ANALYZER PANEL SAMPLE WATER. FIELD ROUTE TO ANALYZER PANEL.
12. 2-INCH PATHOGEN TEST TANK FILL LINES FIELD ROUTE TO PATHOGEN TEST TANKS.
13. PREFORMED CHLORAMINES INJECTION PER DETAIL M2100, SIMILAR. CONTRACTOR TO FIELD ROUTE CHEMICAL LINES FROM AREA 8.
14. 4-INCH STATIC MIXER. MXR-513.
15. CITRIC ACID INJECTION PER DETAIL M2100, SIMILAR. CONTRACTOR TO FIELD ROUTE CHEMICAL LINES FROM AREA 8.
16. SODIUM HYPOCHLORITE INJECTION PER DETAIL M2100, SIMILAR. CONTRACTOR TO FIELD ROUTE CHEMICAL LINES FROM AREA 8.
17. EMERGENCY EYEWASH AND SHOWER, FIELD ROUTE 1-1/4" POTABLE WATER.
18. MBR SYSTEM FILTRATE ANALYZER PANEL. ME-540.
19. 8-INCH BUTTERFLY VALVE (NOT SHOWN). VF-620.
20. 8-INCH PLUG VALVE (NOT SHOWN). MEMBRANE TANK DRAIN VALVE. VP-500A.
21. 2-INCH DRAIN FROM MBR ANALYZER PANEL.
22. 6-INCH DRAIN. CONNECT TO CIVIL DRAIN USING DETAIL M5077. SEE CIVIL FOR CONTINUATION.
23. PIPE SUPPORT PER GENERAL NOTE 1.
24. 8-INCH FLEXIBLE PIPE CONNECTOR.
25. 8-INCH BUTTERFLY VALVE. V-550B.
26. 4-INCH BUTTERFLY VALVE. VF-560.
27. ~~4-INCH FLOW METER. FIT-571.~~ B
28. PURE WATER FACILITY FEED PUMP. P-570.
29. PATHOGEN TESTING PANEL NO. 1 AND NO. 2. SEE I-61 FOR ADDITIONAL INFORMATION.
30. PATHOGEN TEST TANK DRAINS. CONNECT TO CIVIL DRAIN USING DETAIL M5076. SEE CIVIL FOR CONTINUATION.
31. 2-INCH PVC PATHOGEN TEST TANK VALVES (TYP.). SEE I-61 FOR TAG NUMBERS.
32. WAS DRAIN LINE. SEE M-06. CONNECT TO CIVIL DRAIN USING DETAIL M5077. SEE CIVIL FOR CONTINUATION.

M-09

KEY MAP

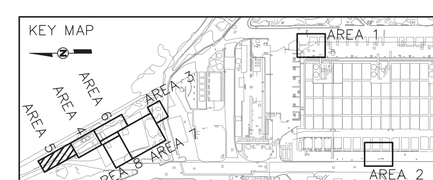

CONSULTANT

Stantec

Brown AND Caldwell

Trussell TECHNOLOGIES INC

REGISTERED PROFESSIONAL ENGINEER PATRICK J. STAHL No. C82053 Exp. 3-31-2024 CIVIL STATE OF CALIFORNIA

12/09/22

CENTRAL AREA SMALL-SCALE FACILITY

MECHANICAL

AREA 5 MBR SYSTEM ENLARGED PLAN

CITY OF SAN DIEGO, CALIFORNIA
ENGINEERING AND CAPITAL PROJECTS DEPARTMENT
SHEET 83 OF 264 SHEETS

WBS B-21151

APPROVED: FOR CITY ENGINEER — DATE 10/13/2022
ALICE ALTES — RCE# C68286
PRINT DCE NAME

SUBMITTED BY: JOSEPH QUICHO, PROJECT MANAGER
CO-EDED BY: MICHAEL VIOLANTE, PROJECT ENGINEER

DESCRIPTION	BY	APPROVED	DATE	FILMED
ORIGINAL	STN		10/22	
B ADDENDUM B	STN		12/22	

186-1692 CCS27 COORDINATE
1826444-6250407 CCS83 COORDINATE

DRAWING NO. 0100179-83-D — M09

CONTRACTOR
INSPECTOR
NTP DATE
NOC DATE

B RELOCATE FLOW METER FIT-571 TO AREA 4. SEE M-12.

ADDENDUM B

FILENAME: CASSF-M-09.DWG

December 20, 2022
Pure Water Program (PWP) Central Area Small Scale Facility

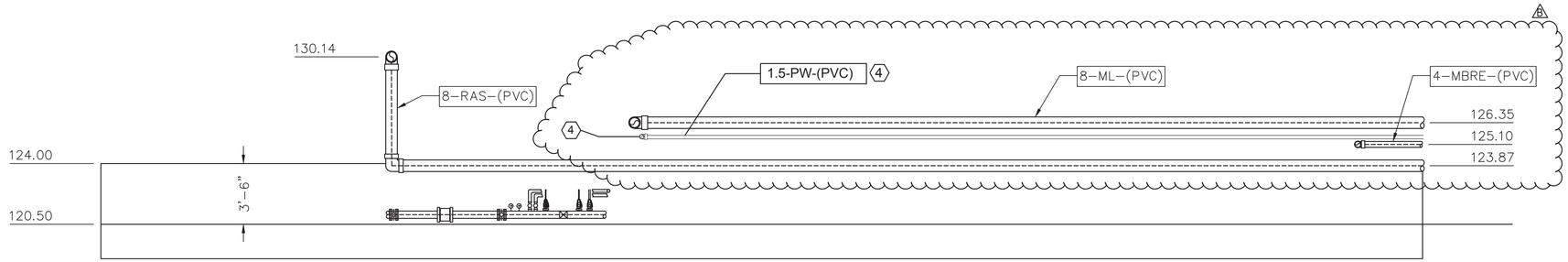

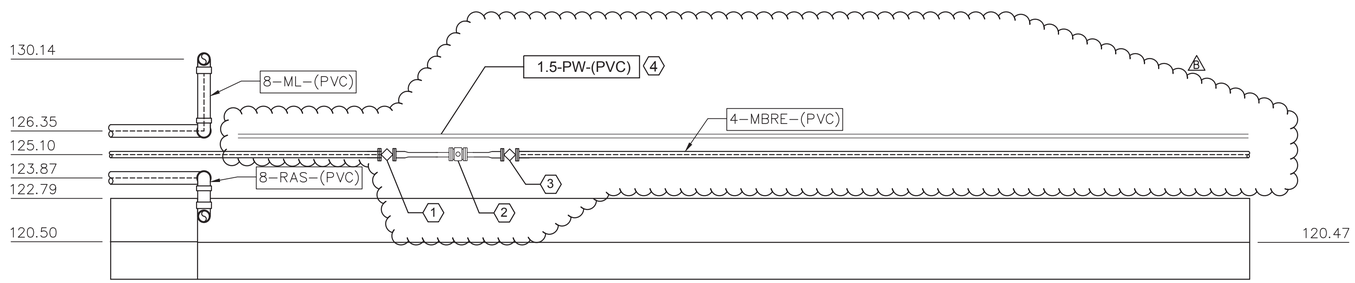

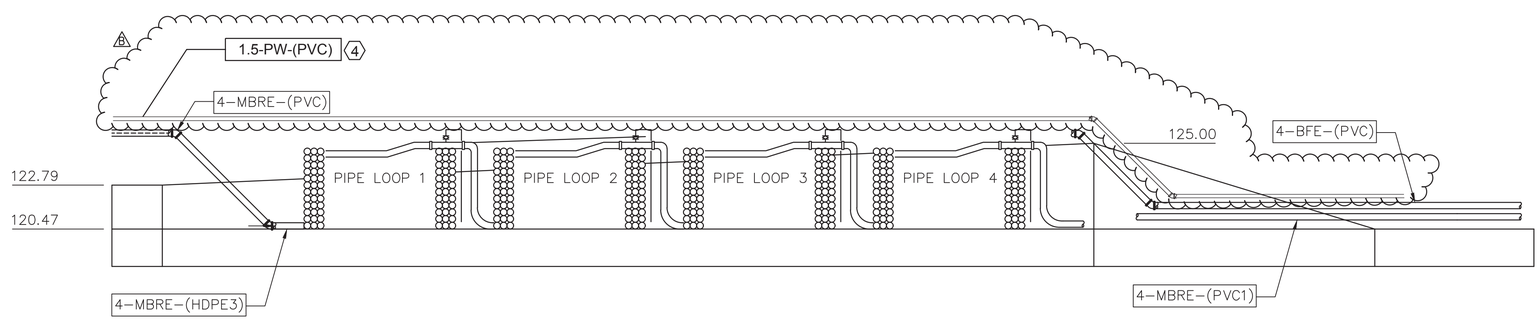

SECTION A M-02
SCALE: 1/4"=1'-0"

GENERAL NOTES:

1. PIPING SUPPORTS ARE DEFERRED DESIGN AND SHALL BE BY THE CONTRACTOR'S PIPE SUPPORT DESIGNER PER SECTION 40 05 07. ANY SUPPORTS SHOWN ON DRAWINGS INCLUDING PIPE SUPPORT DETAILS ARE FOR REFERENCE ONLY.
2. EQUIPMENT PROVIDED BY BNR/MBR SYSTEM SUPPLIER PER SPECIFICATIONS 46 41 40 AND 46 61 33.
3. ONLY MAJOR PIPING IS SHOWN. CONTRACTOR TO FIELD ROUTE ALL CHEMICAL, ELECTRICAL, AND SMALL DIAMETER PIPE.

B

KEY NOTES

1. 4-INCH VALVE, VF-570A
2. 3-INCH FLOW METER, VF-FIT-571
3. 4-INCH VALVE, VF-570B
4. FIELD ROUTE 1.5-INCH POTABLE WATER LINE ALONG RETAINING WALL TO EYE WASH SHOWERS AND HOSE BIBS

M-12

CENTRAL AREA SMALL-SCALE FACILITY

MECHANICAL
AREA 5 MBR SYSTEM SECTIONS AND DETAILS - 3

CITY OF SAN DIEGO, CALIFORNIA
ENGINEERING AND CAPITAL PROJECTS DEPARTMENT
SHEET 86 OF 264 SHEETS

WBS B-21151

CONSULTANT: Stantec, Brown AND Caldwell, Trussell TECHNOLOGIES INC

REGISTERED PROFESSIONAL ENGINEER PATRICK J. SAHL No. C82053 Exp. 3-31-2024 CIVIL STATE OF CALIFORNIA
12/09/22

APPROVED: FOR CITY ENGINEER ALICE ALTES — DATE 10/13/2022 — RCE# C68286

SUBMITTED BY: JOSEPH QUICHO, PROJECT MANAGER
CHECKED BY: MICHAEL VIOLANTE, PROJECT ENGINEER

DESCRIPTION	BY	APPROVED	DATE	FILMED
ORIGINAL	BC		10/22	
3 ADDENDUM B	BC		12/22	

186-1692 CCS27 COORDINATE
1826444-6250407 CCS83 COORDINATE
DRAWING NO. 0100179-86-D M12

CONTRACTOR ____ NTP DATE ____
INSPECTOR ____ NOC DATE ____

3 RELOCATED FLOW METER FIT-571 AND ASSOCIATED VALVES FROM AREA 5. ADDED ROUTING OF 1.5-INCH POTABLE WATER LINE.

ADDENDUM B

AREA 5 MBR SYSTEM SECTIONS AND DETAILS - 3

FILENAME: CASSF-M-12.DWG

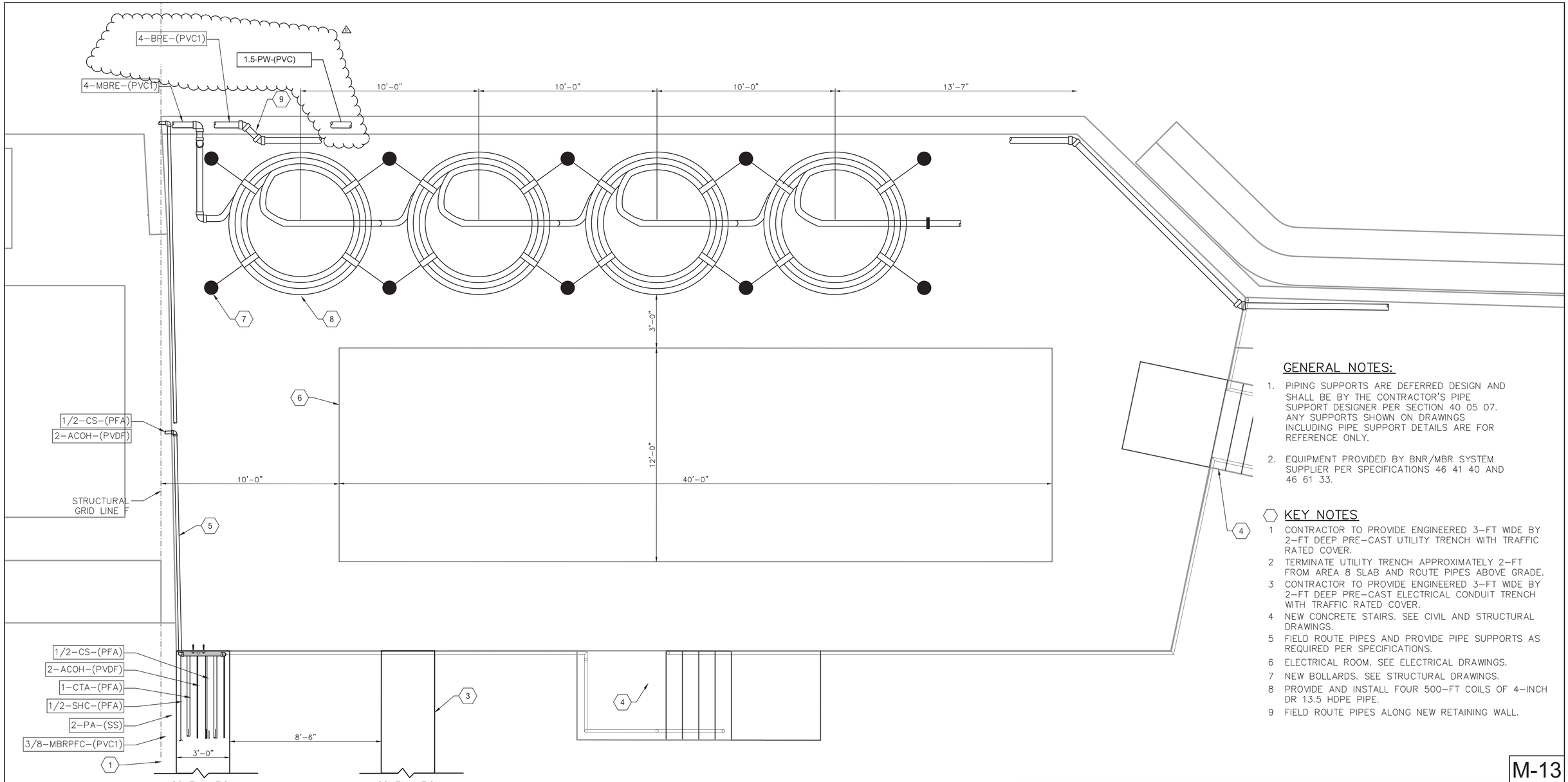

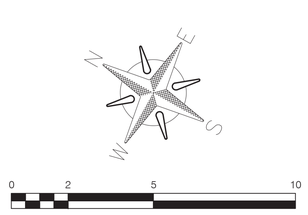

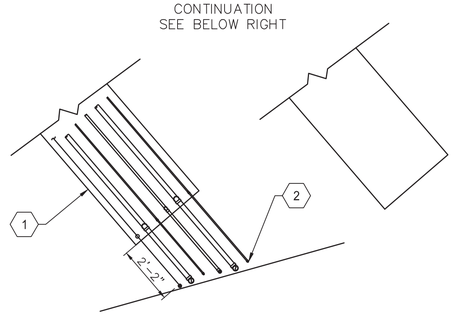

AREA 6 PIPE LOOP DETAILS

GENERAL NOTES:

1. PIPING SUPPORTS ARE DEFERRED DESIGN AND SHALL BE BY THE CONTRACTOR'S PIPE SUPPORT DESIGNER PER SECTION 40 05 07. ANY SUPPORTS SHOWN ON DRAWINGS INCLUDING PIPE SUPPORT DETAILS ARE FOR REFERENCE ONLY.
2. EQUIPMENT PROVIDED BY BNR/MBR SYSTEM SUPPLIER PER SPECIFICATIONS 46 41 40 AND 46 61 33.

KEY NOTES

1. CONTRACTOR TO PROVIDE ENGINEERED 3-FT WIDE BY 2-FT DEEP PRE-CAST UTILITY TRENCH WITH TRAFFIC RATED COVER.
2. TERMINATE UTILITY TRENCH APPROXIMATELY 2-FT FROM AREA 8 SLAB AND ROUTE PIPES ABOVE GRADE.
3. CONTRACTOR TO PROVIDE ENGINEERED 3-FT WIDE BY 2-FT DEEP PRE-CAST ELECTRICAL CONDUIT TRENCH WITH TRAFFIC RATED COVER.
4. NEW CONCRETE STAIRS. SEE CIVIL AND STRUCTURAL DRAWINGS.
5. FIELD ROUTE PIPES AND PROVIDE PIPE SUPPORTS AS REQUIRED PER SPECIFICATIONS.
6. ELECTRICAL ROOM. SEE ELECTRICAL DRAWINGS.
7. NEW BOLLARDS. SEE STRUCTURAL DRAWINGS.
8. PROVIDE AND INSTALL FOUR 500-FT COILS OF 4-INCH DR 13.5 HDPE PIPE.
9. FIELD ROUTE PIPES ALONG NEW RETAINING WALL.

M-13

KEY MAP

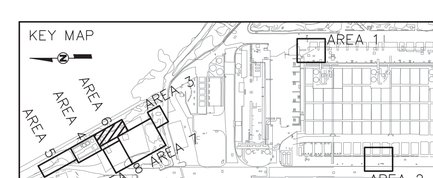

CONSULTANT

Stantec

Brown AND Caldwell

Trussell TECHNOLOGIES INC

REGISTERED PROFESSIONAL ENGINEER PATRICK J STAHL No. C82053 Exp. 3-31-2024 CIVIL STATE OF CALIFORNIA

12/09/22

CONTRACTOR
INSPECTOR
NTP DATE
NOC DATE

CENTRAL AREA SMALL-SCALE FACILITY

MECHANICAL
AREA 6 PIPE LOOP DETAILS

CITY OF SAN DIEGO, CALIFORNIA
ENGINEERING AND CAPITAL PROJECTS DEPARTMENT
SHEET 87 OF 264 SHEETS

WBS B-21151

APPROVED FOR CITY ENGINEER — 10/13/2022 DATE
ALICE ALTES — C68286
PRINT DCE NAME — RCE#

SUBMITTED BY: JOSEPH QUICHO, PROJECT MANAGER
CHECKED BY: MICHAEL VIOLANTE, PROJECT ENGINEER

DESCRIPTION	BY	APPROVED	DATE	FILMED
ORIGINAL	STN		10/22	
⚠ ADDENDUM B	STN		12/22	

186-1692
CCS27 COORDINATE
1826444-6250407
CCS83 COORDINATE
DRAWING NO. 0100179-87-D
M13

FILENAME: CASSF-M-13.DWG

⚠ REVISED SIZE OF POTABLE WATER LINE.

ADDENDUM B

GENERAL NOTES

1. PIPING SUPPORTS ARE DEFERRED DESIGN AND SHALL BE BY THE CONTRACTOR'S PIPE SUPPORT DESIGNER PER SECTION 40 05 17.
2. FINAL PIPING ALIGNMENTS SHALL BE FIELD–VERIFIED BY THE CONTRACTOR AND APPROVED BY THE OWNER.
3. VALVES, INSTRUMENTATION, AND OTHER PIPING APPURTENANCES NOT SHOWN FOR CLARITY. CONTRACTOR TO FIELD–ROUTE AND PLACE PER P&IDS.
4. PROCESS DRAINS TO BE FIELD–ROUTED BY CONTRACTOR TO DRAINS WITHIN SLAB. SEE C–11 FOR DRAIN LOCATIONS AND DETAIL M–5078 FOR FLOOR DRAIN DETAIL.
5. REFER TO STRUCTURAL DWGS FOR EQUIPMENT PAD DETAILS.
6. REFER TO M–30 AND M–31 FOR TANK NOZZLE DETAILS.

KEY NOTES

1 FINE BUBBLE DIFFUSER COLUMNS (BY OZONE/BAC SYSTEM SUPPLIER).
2 OZONE CONTACTOR (BY CONTRACTOR).
3 TNK–740 OZONE PRODUCT TANK (BY CONTRACTOR).
4 P–750 AND P–751 OZONE PRODUCT PUMP NO.1 AND NO.2 (BY OZONE/BAC SYSTEM SUPPLIER).
5 BAC FILTERS (BY OZONE/BAC SYSTEM SUPPLIER).
6 TNK–820 BAC FILTRATE TANK (BY CONTRACTOR).
7 P–824 MF TRANSFER PUMP (BY CONTRACTOR).
8 TNK–850 BAC BACKWASH TANK (BY CONTRACTOR).
9 P–860 BAC BACKWASH PUMP (BY OZONE/BAC SYSTEM SUPPLIER).
10 BLW–870 BAC AIR SCOUR BLOWER (BY OZONE/BAC SYSTEM SUPPLIER).
11 OZONE CONTACTOR ANALYZER PANEL NO. 3 AIT/AE 745 DO3. SEE I–26 FOR ANALYZER PANEL DETAILS. CONTRACTOR TO PROVIDE AND INSTALL SAMPLE LINES FROM PROCESS TO ANALYZERS PER THE P&IDS.
12 OZONE CONTACTOR ANALYZER PANEL NO.2 AIT/AE 744 DO3. SEE I–26 FOR ANALYZER PANEL DETAILS. CONTRACTOR TO PROVIDE AND INSTALL SAMPLE LINES FROM PROCESS TO ANALYZERS PER THE P&IDS.
13 OZONE CONTACTOR ANALYZER PANEL NO.1 AIT/AE 741 DO3. SEE I–26 FOR ANALYZER PANEL DETAILS. CONTRACTOR TO PROVIDE AND INSTALL SAMPLE LINES FROM PROCESS TO ANALYZERS PER THE P&IDS.
14 OZONE PRODUCT ANALYZER PANEL AIT/AE 746 UVT, AIT/AE 747 ORP, AIT/748 TURB. SEE I–26 FOR ANALYZER PANEL DETAILS. CONTRACTOR TO PROVIDE AND INSTALL SAMPLE LINES FROM PROCESS TO ANALYZERS PER THE P&IDS.
15 OZONE INFLUENT ANALYZER PANEL NO. 2 AIT/AE 811 UVT, AIT/AE 812 ORP. SEE I–26 FOR ANALYZER PANEL DETAILS. CONTRACTOR TO PROVIDE AND INSTALL SAMPLE LINES FROM PROCESS TO ANALYZERS PER THE P&IDS.
16 OZONE INFLUENT ANALYZER PANEL NO. 1 AIT/AE 813 TCL. SEE I–26 FOR ANALYZER PANEL DETAILS. CONTRACTOR TO PROVIDE AND INSTALL SAMPLE LINES FROM PROCESS TO ANALYZERS PER THE P&IDS.
17 BAC FILTRATE ANALYZER PANEL AIT/AE 821 TURBIDITY, AIT/AE 822 TOC, AIT/AE 823 UVT. SEE I–26 FOR ANALYZER PANEL DETAILS. CONTRACTOR TO PROVIDE AND INSTALL SAMPLE LINES FROM PROCESS TO ANALYZERS PER THE P&IDS.
18 PIPE SUPPORTS FOR CHEMICAL FILL LINES TO BE MOUNTED TO THE RETAINING WALL PER C–12.
19 SBS ADDITION INTO 4"–MBRE–(PVC) UPSTREAM OF MXR–703. CONTRACTOR TO FIELD–ROUTE CHEMICAL PIPING TO DOSING LOCATIONS PER THE P&IDS.
20 SBS ADDITION INTO 4"–OCE–(PVC). CONTRACTOR TO FIELD–ROUTE CHEMICAL PIPING TO DOSING LOCATIONS PER THE P&IDS.
21 UTILITY STATION TYPE C, RAIL MOUNTED. SEE DETAIL M5021. FIELD ROUTE POTABLE WATER SUPPLY FROM M–14, TYPICAL.
22 DEMISTER UNIT MOUNTED VERTICALLY ABOVE TNK–740 IN–LINE WITH OFF–GAS PIPING TO THE DESTRUCT UNIT. VERTICAL MOUNTING IS REQUIRED TO ALLOW DRAINAGE INTO TANK.
23 BAC TOWER SKID SHALL NOT BE EXPANDED OR SHIFTED NORTHWARD OR EASTWARD OF THIS POINT TO AVOID CONFLICTS WITH DRAIN LOCATION.
24 P–752 OZONE CONTACTOR SAMPLE PUMP NO. 1 (BY CONTRACTOR).
25 P–753 OZONE CONTACTOR SAMPLE PUMP NO. 2 (BY CONTRACTOR).
26 P–754 OZONE CONTACTOR SAMPLE PUMP NO. 3 (BY CONTRACTOR).
27 P–755 OZONE CONTACTOR SAMPLE PUMP NO. 4 (BY CONTRACTOR).

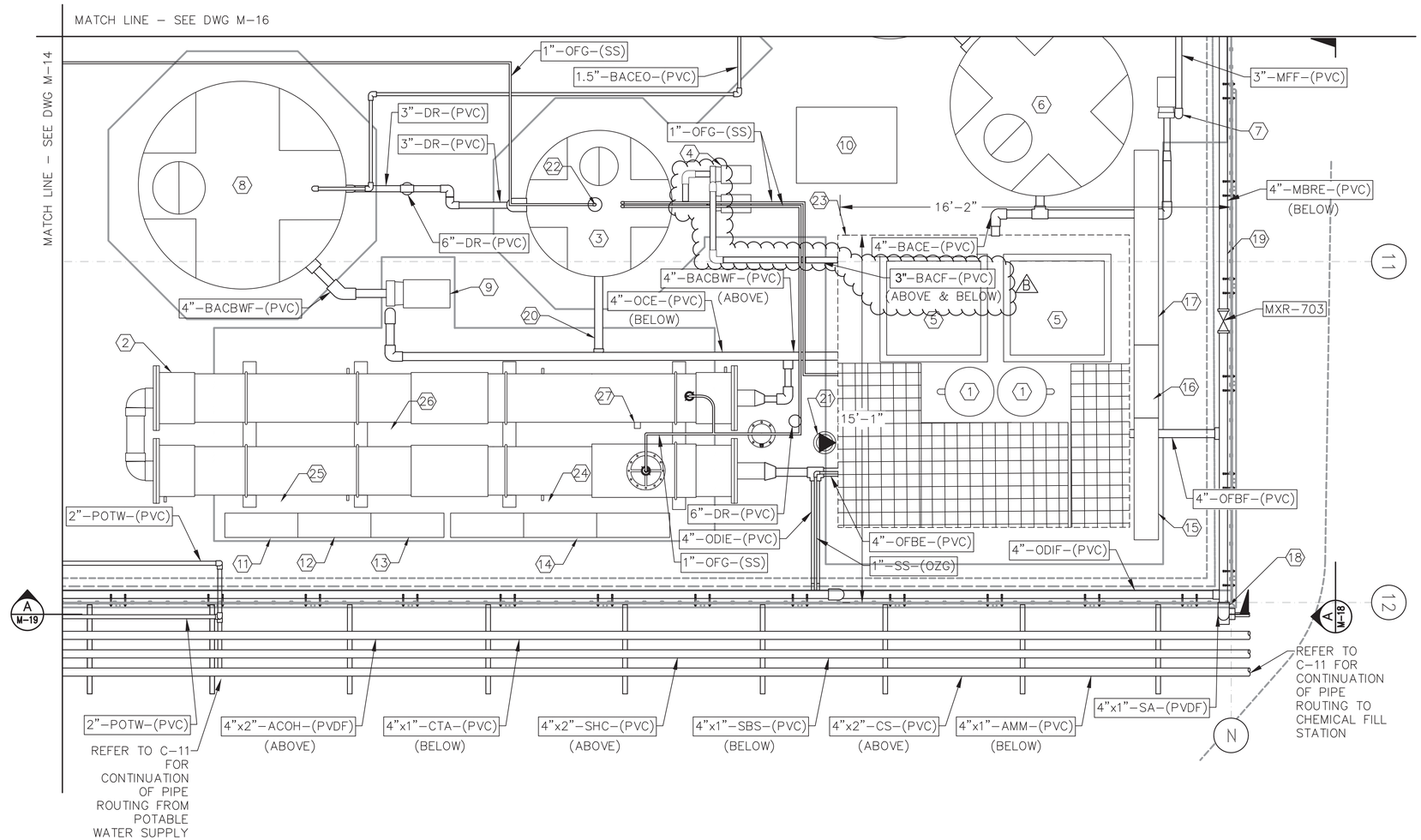

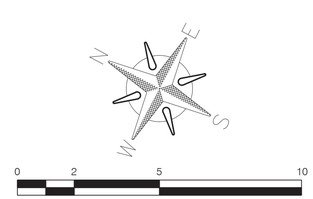

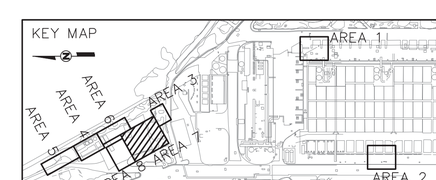

CONSULTANT

Stantec

Brown AND Caldwell

Trussell TECHNOLOGIES INC

REGISTERED PROFESSIONAL ENGINEER MITCHEL JOSEPH BARTOLO C 89295 EXP. 12/31/22 CIVIL STATE OF CALIFORNIA 12/09/22

CENTRAL AREA SMALL-SCALE FACILITY

MECHANICAL
AREA 7 PURE WATER FACILITY
ENLARGED PLAN - 2

CITY OF SAN DIEGO, CALIFORNIA
ENGINEERING AND CAPITAL PROJECTS DEPARTMENT
SHEET 89 OF 264 SHEETS

WBS B–21151

APPROVED: FOR CITY ENGINEER — 10/13/2022 DATE
ALICE ALTES — C68286 RCE#
PRINT DCE NAME

SUBMITTED BY: JOSEPH QUICHO, PROJECT MANAGER
CHECKED BY: MICHAEL VIOLANTE, PROJECT ENGINEER

DESCRIPTION	BY	APPROVED	DATE	FILMED
ORIGINAL	TT		10/22	
B ADDENDUM B	TT		12/22	

186–1692 CCS27 COORDINATE
1826444–6250407 CCS83 COORDINATE
DRAWING NO. 0100179-89-D M15

CONTRACTOR
INSPECTOR
NTP DATE
NOC DATE

M-15

AREA 7 PURE WATER FACILITY ENLARGED PLAN - 2

B REVISED SIZING OF BACF PIPING FROM 2" TO 3"

ADDENDUM B

FILENAME: CASSF-M-14 THRU M-17.DWG

GENERAL NOTES

1. PIPING SUPPORTS ARE DEFERRED DESIGN AND SHALL BE BY THE CONTRACTOR'S PIPE SUPPORT DESIGNER PER SECTION 40 05 17.
2. FINAL PIPING ALIGNMENTS SHALL BE FIELD–VERIFIED BY THE CONTRACTOR AND APPROVED BY THE OWNER.
3. VALVES, INSTRUMENTATION, AND OTHER PIPING APPURTENANCES NOT SHOWN FOR CLARITY. CONTRACTOR TO FIELD–ROUTE AND PLACE PER P&IDS.
4. PROCESS DRAINS TO BE FIELD–ROUTED BY CONTRACTOR TO DRAINS WITHIN SLAB. SEE C–11 FOR DRAIN LOCATIONS AND DETAIL M–5078 FOR FLOOR DRAIN DETAIL.
5. REFER TO STRUCTURAL DWGS FOR EQUIPMENT PAD DETAILS.
6. REFER TO M–30 AND M–31 FOR TANK NOZZLE DETAILS.

KEY NOTES

1. TNK–820 BAC FILTRATE TANK (BY CONTRACTOR).
2. TNK–830 BAC FILTRATE OVERFLOW TANK (BY CONTRACTOR).
3. P–840 BAC BACKWASH TRANSFER PUMP (BY CONTRACTOR).
4. MF SKID DESIGN EXAMPLE PROVIDED BY WIGEN. ADDITIONAL SPACE IS ALLOCATED FOR A LARGER FOOTPRINT SKID. SKID INCLUDES STRAINERS, FEED PUMPS AND CIP SYSTEM (BY MF SYSTEM SUPPLIER). CITRIC ACID, CAUSTIC SODA, SODIUM HYPOCHLORITE, AND SODIUM BISULFITE DOSING POINTS LOCATED ON SKID. CONTRACTOR TO FIELD–ROUTE CHEMICAL PIPING TO DOSING LOCATIONS PER P&IDS.
5. TNK–900 MURRAY RO FEED TANK (BY CONTRACTOR).
6. TOP TO BOTTOM: P–970 CCRO FEED PUMP, P–910 MURRAY CRO TRANSFER PUMP, P–990 FRRO TRANSFER PUMP, P–1000 SAN VICENTE CRO TRANSFER PUMP (BY RO VENDORS).
7. TNK–1060 RO CIP TANK (BY CONTRACTOR).
8. P–1065 RO CIP PUMP AND CARTRIDGE FILTER (BY CONTRACTOR).
9. P–1441, P–1444, P–1446, P–1447 SULFURIC ACID METERING PUMPS (BY CONTRACTOR).
10. TNK–1440 DOUBLE–WALL SULFURIC ACID STORAGE TANK PALLET (BY CONTRACTOR).
11. 4" WIDE X 6" HIGH CONTAINMENT CURB.
12. 2' X 2' X 1' SUMP.
13. P–1631, P–1632, P–1633, P–1634 ANTISCALANT METERING PUMPS AND CONTAINMENT PALLET (BY CONTRACTOR).
14. TNK–1634 ANTISCALANT DRUM AND CONTAINMENT PALLET (BY CONTRACTOR).
15. EMERGENCY EYE WASH AND SHOWER. FIELD ROUTE 1–1/4" POTABLE WATER, TYPICAL.
16. UTILITY STATION TYPE C, RAIL MOUNTED. SEE DETAIL M5021. FIELD ROUTE POTABLE WATER, TYPICAL.
17. MURRAY 3–STAGE CONVENTIONAL RO SKID EXAMPLE PROVIDED BY BIWATER. SKIDS INCLUDE FEED PUMPS, CARTRIDGE FILTERS, BOOSTER PUMPS, AND PRESSURE VESSELS (BY CONVENTIONAL RO SYSTEM SUPPLIER). ANTISCALANT AND SULFURIC ACID DOSING POINTS WILL BE LOCATED ON SKID. CONTRACTOR TO FIELD–ROUTE CHEMICAL PIPING TO DOSING LOCATIONS PER THE P&IDS.
18. FRRO SKID DESIGN EXAMPLE PROVIDED BY ROTEC. FRRO SKID WILL INCLUDE FEED PUMP, CARTRIDGE FILTER, BOOSTER PUMPS, AND PRESSURE VESSELS (BY FLOW REVERSAL RO SYSTEM SUPPLIER). ANTISCALANT AND SULFURIC ACID DOSING POINTS WILL BE LOCATED ON SKID. CONTRACTOR TO FIELD–ROUTE CHEMICAL PIPING TO DOSING LOCATIONS PER THE P&IDS.
19. MF INFLUENT ANALYZER PANEL AIT/AE 860 TCL, AIT/AE 851 NH3. SEE I–26 FOR ANALYZER PANEL DETAILS. CONTRACTOR TO PROVIDE AND INSTALL SAMPLE LINES FROM PROCESS TO ANALYZERS PER THE P&IDS.
20. SAN VICENTE RO FEED ANALYZER PANEL AIT/AE 1003 TCL, AIT/AE 1004 NH3. SEE I–26 FOR ANALYZER PANEL DETAILS. CONTRACTOR TO PROVIDE AND INSTALL SAMPLE LINES FROM PROCESS TO ANALYZERS PER THE P&IDS.
21. MURRAY RO FEED ANALYZER PANEL AIT/AE 903 TCL, AIT/AE 904 ORP. SEE I–26 FOR ANALYZER PANEL DETAILS. CONTRACTOR TO PROVIDE AND INSTALL SAMPLE LINES FROM PROCESS TO ANALYZERS PER THE P&IDS.
22. AIT/AE 960 SR. CONTRACTOR TO PROVIDE AND INSTALL SAMPLE LINES FROM PROCESS TO ANALYZER PER THE P&IDS.
23. RECTANGLE DENOTES THE AREA CONNECTING THE OUTERMOST ANCHOR BOLTS OF THE FOUR CANOPY SUPPORT COLUMNS. ANCHOR BOLTS MUST HAVE A MINIMUM SPACING OF 12' FROM THE EDGE OF THE SLAB OR THE EDGE OF THE AREA 7 MANHOLE. THE ACTUAL EXTENT OF THE CANOPY COVERAGE WILL BE LESS THAN THE AREA SHOWN.
24. CAUSTIC SODA AND CITRIC ACID ADDITION INTO 3"–CIPR–(PVC). CONTRACTOR TO FIELD–ROUTE CHEMICAL PIPING TO DOSING LOCATIONS PER THE P&IDS.
25. PREFORMED CHLORAMINES ADDITION INTO 3"–MFF–(PVC) UPSTREAM OF MXR–860. CONTRACTOR TO FIELD–ROUTE CHEMICAL PIPING TO DOSING LOCATIONS PER THE P&IDS.
26. PREFORMED CHLORAMINES ADDITION INTO 1.5"–SVROF–(PVC) UPSTREAM OF MXR–1000. CONTRACTOR TO FIELD–ROUTE CHEMICAL PIPING TO DOSING LOCATIONS PER THE P&IDS.
27. MF SKID SHALL NOT BE EXPANDED OR SHIFTED WESTWARD OF THIS POINT TO AVOID CONFLICTS WITH DRAIN LOCATION.
28. FRRO SKID SHALL NOT BE EXPANDED OR SHIFTED NORTHWARD OR EASTWARD OF THIS POINT TO AVOID CONFLICTS WITH DRAIN LOCATION.
29. MURRAY 3–STAGE CONVENTIONAL RO SKID SHALL NOT BE EXPANDED OR SHIFTED NORTHWARD OR EASTWARD OF THIS POINT TO AVOID CONFLICTS WITH DRAIN LOCATION.

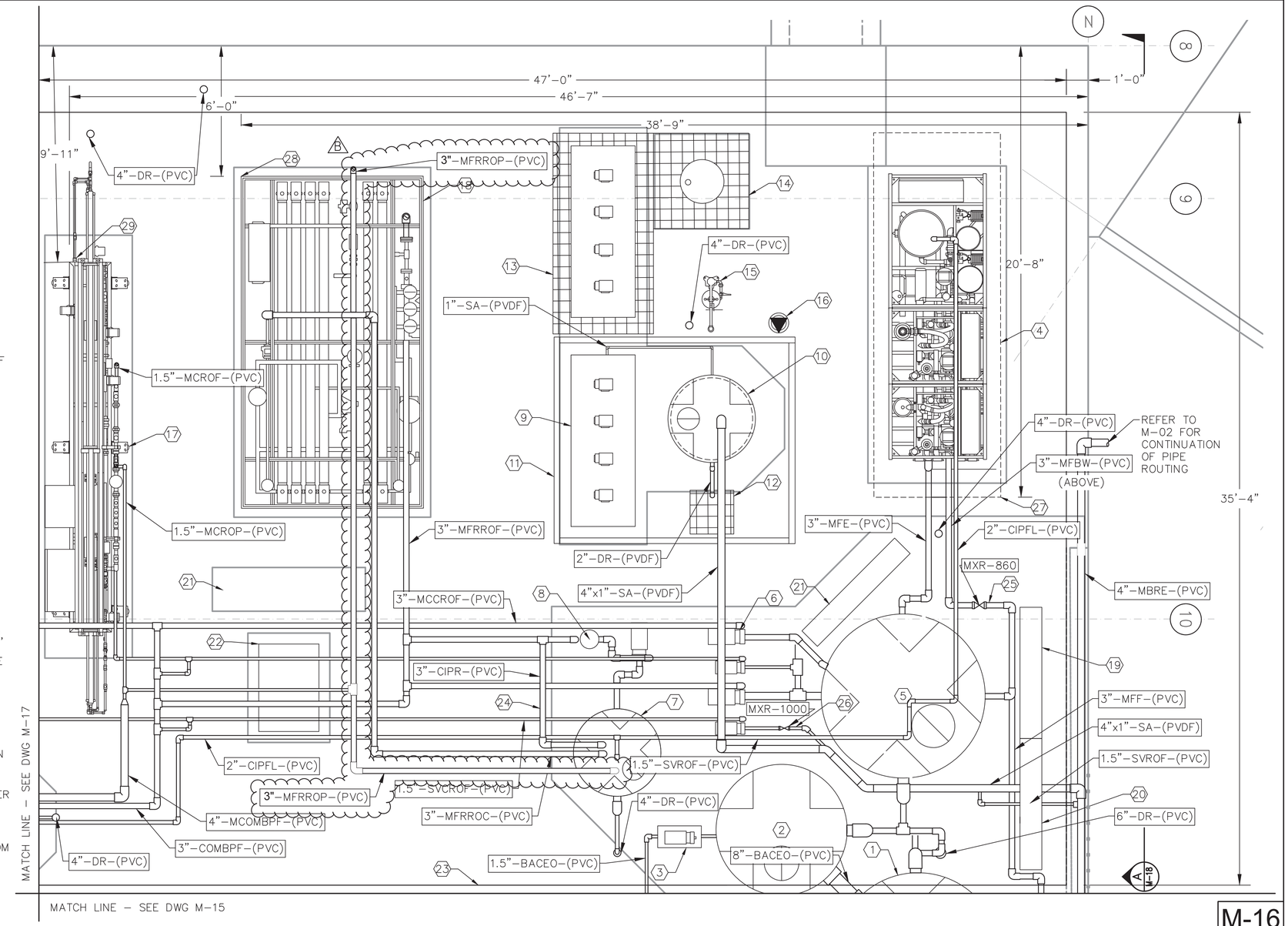

M-16

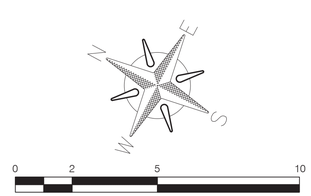

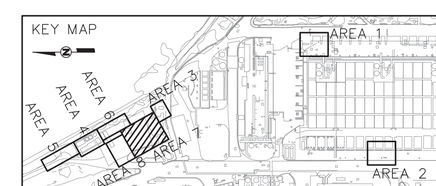

CENTRAL AREA SMALL-SCALE FACILITY

MECHANICAL
AREA 7 PURE WATER FACILITY
ENLARGED PLAN - 3

CITY OF SAN DIEGO, CALIFORNIA
ENGINEERING AND CAPITAL PROJECTS DEPARTMENT
SHEET 90 OF 264 SHEETS

WBS B–21151

CONSULTANT: Stantec; Brown AND Caldwell; Trussell TECHNOLOGIES INC

REGISTERED PROFESSIONAL ENGINEER — MITCHEL JOSEPH BARTOLO — C 89295 — EXP. 12/31/22 — CIVIL — STATE OF CALIFORNIA — 12/09/22

APPROVED: FOR CITY ENGINEER ALICE ALTES, RCE# C68286 — DATE 10/13/2022

SUBMITTED BY: JOSEPH QUICHO, PROJECT MANAGER

CHECKED BY: MICHAEL VIOLANTE, PROJECT ENGINEER

DESCRIPTION	BY	APPROVED	DATE	FILMED
ORIGINAL	TT		10/22	
B ADDENDUM B	TT		12/22	

186–1692 CCS27 COORDINATE
1826444–6250407 CCS83 COORDINATE

DRAWING NO. 0100179-90-D — M16

CONTRACTOR ____ NTP DATE ____
INSPECTOR ____ NOC DATE ____

B REVISED SIZING OF MFRROP PIPING FROM 2" TO 3"

ADDENDUM B

AREA 7 PURE WATER FACILITY ENLARGED PLAN - 3

FILENAME: CASSF-M-14 THRU M-17.DWG

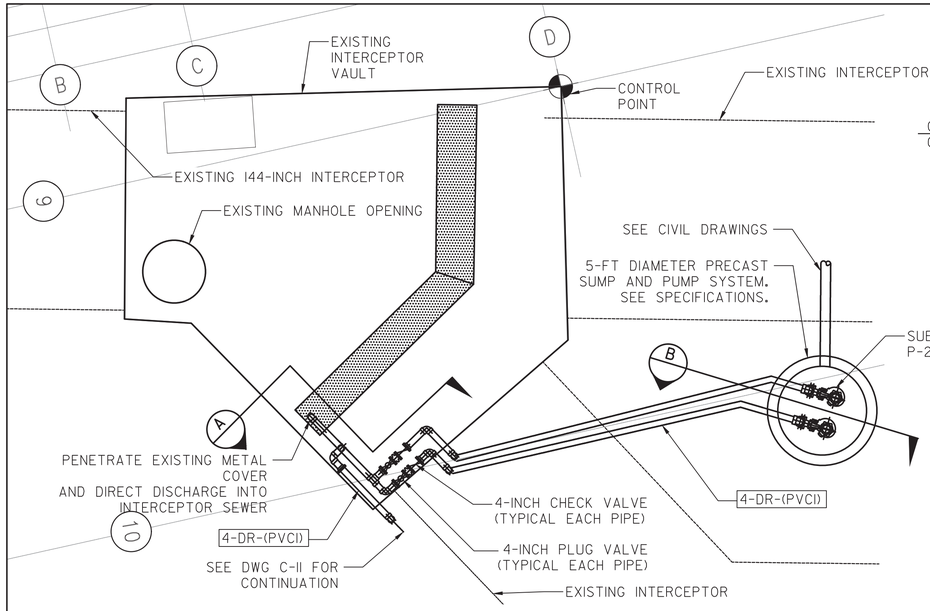

PROCESS DRAIN PUMP STATION
NO SCALE

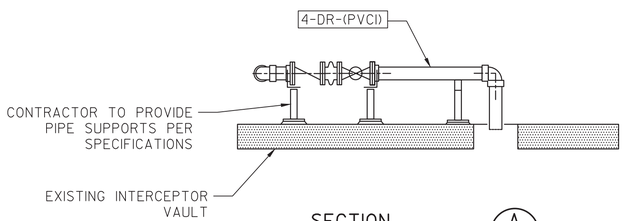

SECTION A
NO SCALE

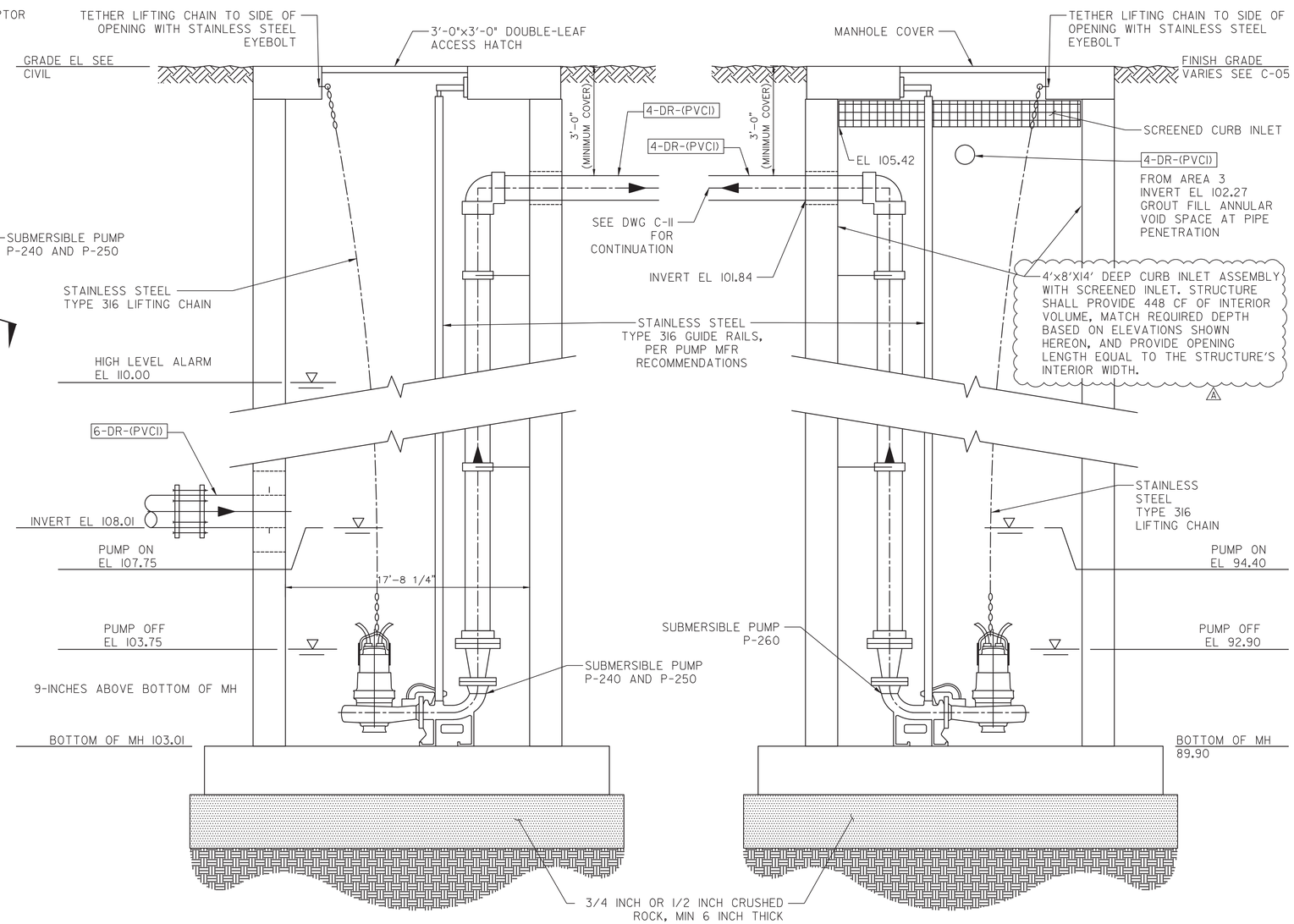

SECTION B
NO SCALE

SECTION C
NO SCALE

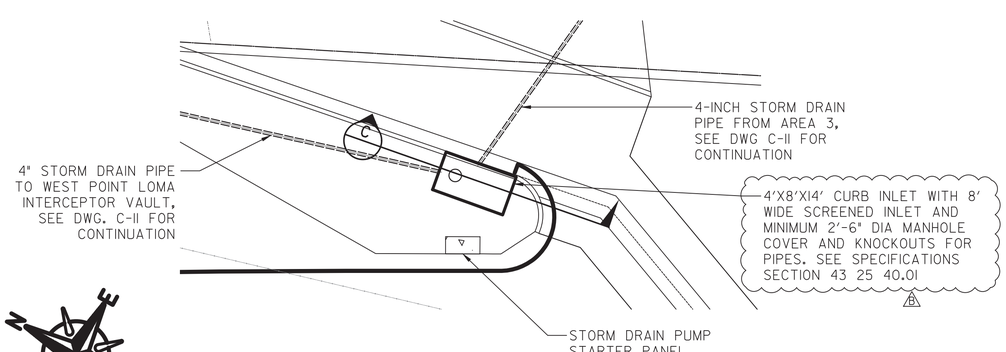

PLAN: STORMWATER DRAIN PUMP STATION
NO SCALE

DRAIN PUMP STATION DETAILS

M-24

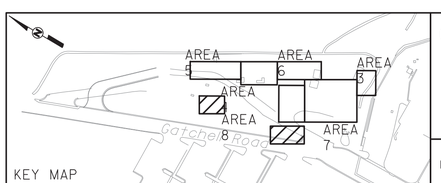

KEY MAP

CENTRAL AREA SMALL-SCALE FACILITY
MECHANICAL
DRAIN PUMP STATIONS - PLANS, SECTIONS AND DETAIL

CITY OF SAN DIEGO, CALIFORNIA
ENGINEERING AND CAPITAL PROJECTS DEPARTMENT
SHEET 98 OF 264 SHEETS

WBS B-21151

CONSULTANT

Stantec
Brown AND Caldwell
Trussell TECHNOLOGIES INC
TSAC ENGINEERING

REGISTERED PROFESSIONAL ENGINEER PATRICK J STAHL No. C82053 Exp. 3-31-2024 CIVIL STATE OF CALIFORNIA
12/09/22

APPROVED: FOR/CITY ENGINEER ALICE ALTES PRINT DCE NAME — DATE 10-13-22 — RCE# C68286

SUBMITTED BY: JOSEPH QUICHO, PROJECT MANAGER
CHECKED BY: MICHAEL VIOLANTE, PROJECT ENGINEER

DESCRIPTION	BY	APPROVED	DATE	FILMED
ORIGINAL	STN		10/22	
A ADDENDUM B	STN		12/22	

186-1692
CCS27 COORDINATE
1826444-6250407
CCS83 COORDINATE

DRAWING NO. 0100179-98-D — M24

CONTRACTOR
INSPECTOR
NTP DATE
NOC DATE

A REVISE DESCRIPTION OF CURB INLET BOX

ADDENDUM B

FILENAME: CASSF-M-24.DWG

December 20, 2022
Pure Water Program (PWP) Central Area Small Scale Facility

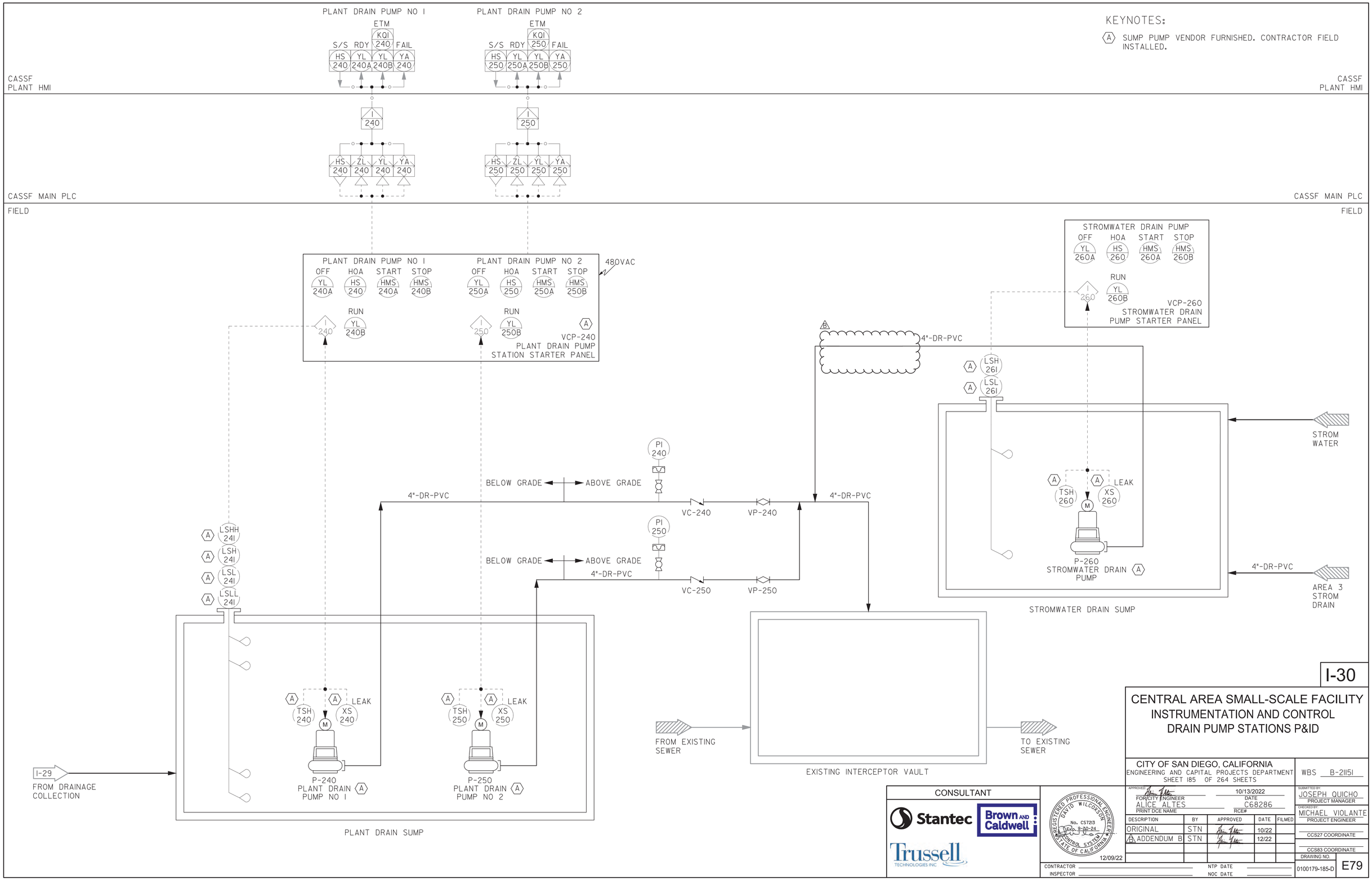

FILENAME: CASSF-I-30.DWG

B DELETE STORMWATER DRAIN PUMP DISCHARGE VALVES VP-260 AND VC-260.

ADDENDUM B

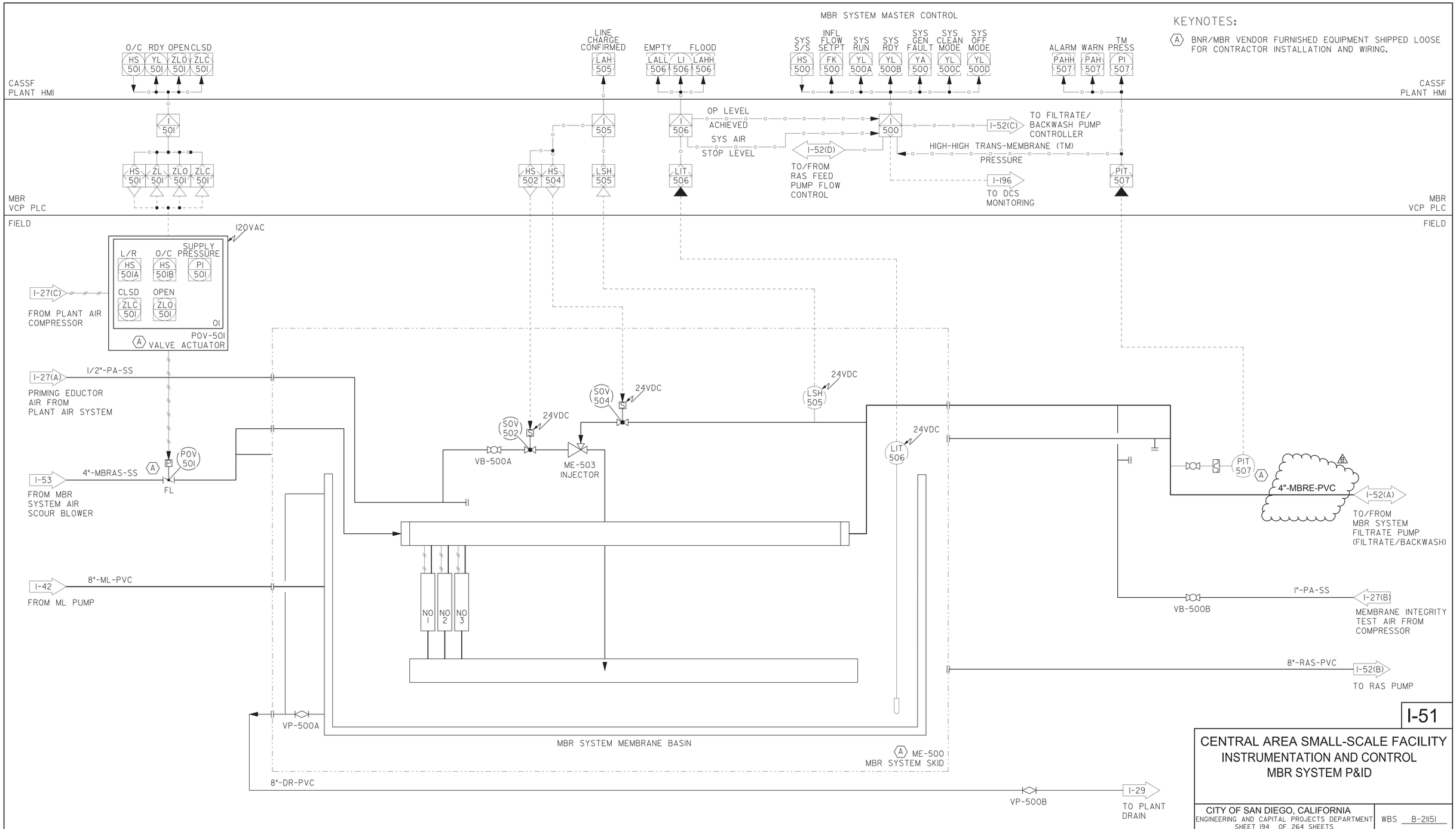

MBR SYSTEM P&D

I-51

CENTRAL AREA SMALL-SCALE FACILITY
INSTRUMENTATION AND CONTROL
MBR SYSTEM P&D

CITY OF SAN DIEGO, CALIFORNIA
ENGINEERING AND CAPITAL PROJECTS DEPARTMENT
SHEET 194 OF 264 SHEETS

WBS B-21151

CONSULTANT

Stantec
Brown AND Caldwell
Trussell TECHNOLOGIES INC

REGISTERED PROFESSIONAL ENGINEER DAVID WILCOXSON No. C57213 Exp. 9-30-24 CONTROL SYSTEM STATE OF CALIFORNIA
12/09/22

APPROVED: FOR CITY ENGINEER — DATE 10/13/2022
ALICE ALTES — PRINT DCE NAME — RCE# C68286

SUBMITTED BY: JOSEPH QUICHO — PROJECT MANAGER
CHECKED BY: MICHAEL VIOLANTE — PROJECT ENGINEER

DESCRIPTION	BY	APPROVED	DATE	FILMED
ORIGINAL	STN		10/22	
(B) ADDENDUM B	STN		12/22	

CCS27 COORDINATE
CCS83 COORDINATE
DRAWING NO. 0100179-194-D
E88

CONTRACTOR
INSPECTOR
NTP DATE
NOC DATE

(B) CORRECTED SIZE OF MBRE PIPE

ADDENDUM B

FILENAME: CASSF-I-51.DWG

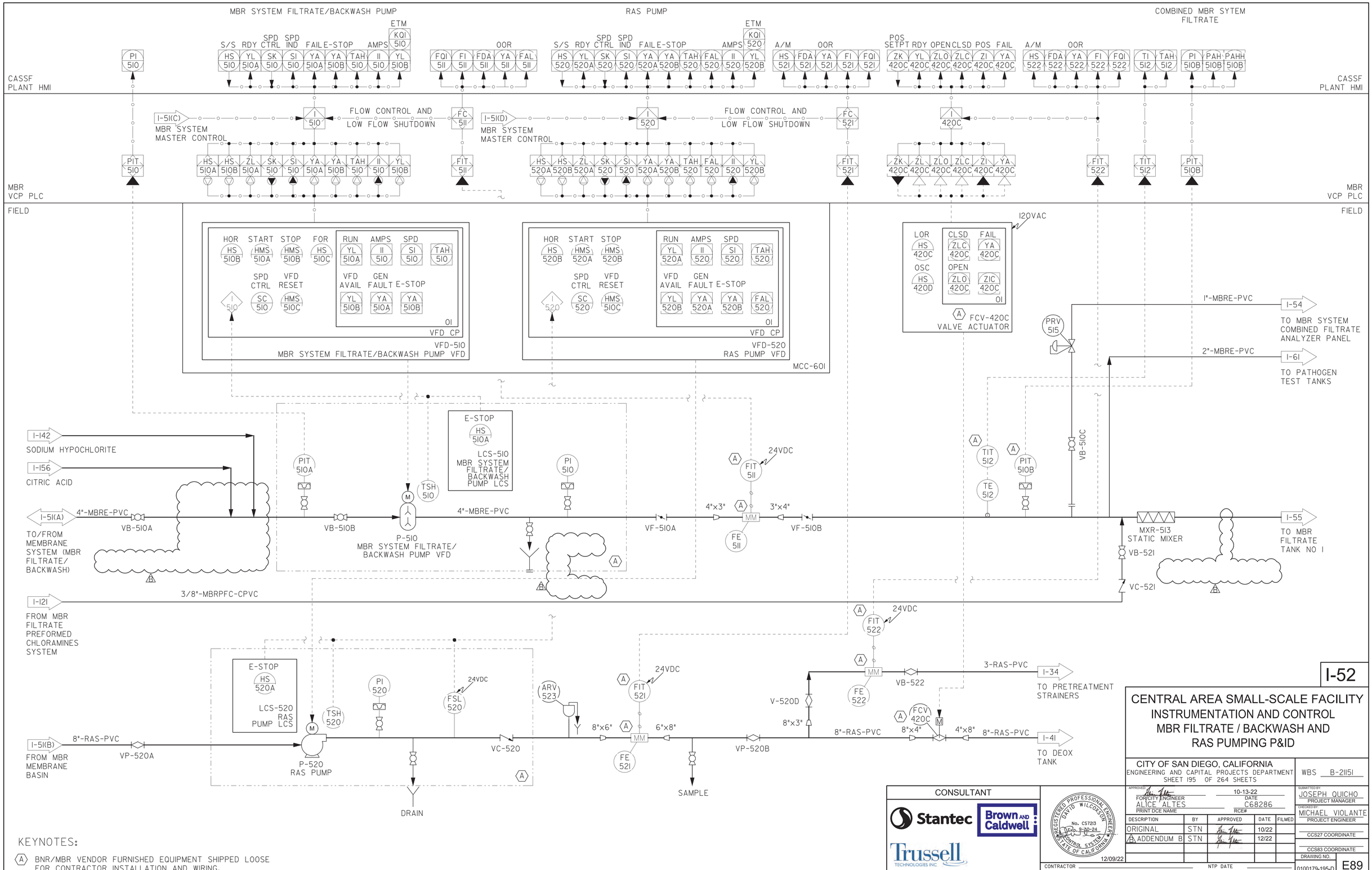

KEYNOTES:

(A) BNR/MBR VENDOR FURNISHED EQUIPMENT SHIPPED LOOSE FOR CONTRACTOR INSTALLATION AND WIRING.

(B) DELETED THE AREA SEGMENT BREAKER

I-52

CENTRAL AREA SMALL-SCALE FACILITY
INSTRUMENTATION AND CONTROL
MBR FILTRATE / BACKWASH AND
RAS PUMPING P&ID

CITY OF SAN DIEGO, CALIFORNIA
ENGINEERING AND CAPITAL PROJECTS DEPARTMENT
SHEET 195 OF 264 SHEETS

WBS B-21151

CONSULTANT: Stantec, Brown AND Caldwell, Trussell TECHNOLOGIES INC

APPROVED: FOR CITY ENGINEER ALICE ALTES, PRINT DCE NAME; RCE# C68286; DATE 10-13-22

SUBMITTED BY: JOSEPH QUICHO, PROJECT MANAGER

CHECKED BY: MICHAEL VIOLANTE, PROJECT ENGINEER

REGISTERED PROFESSIONAL ENGINEER DAVID WILCOXSON No. C57213 Exp. 9-30-24 CONTROL SYSTEMS STATE OF CALIFORNIA 12/09/22

DESCRIPTION	BY	APPROVED	DATE	FILMED
ORIGINAL	STN		10/22	
(B) ADDENDUM B	STN		12/22	

CCS27 COORDINATE

CCS83 COORDINATE

CONTRACTOR

INSPECTOR

NTP DATE

NOC DATE

DRAWING NO. 0100179-195-D

E89

MBR FILTRATE / BACKWASH AND RAS PUMPING P&ID

FILENAME: CASSF-I-52.DWG

December 20, 2022
Pure Water Program (PWP) Central Area Small Scale Facility

ADDENDUM B

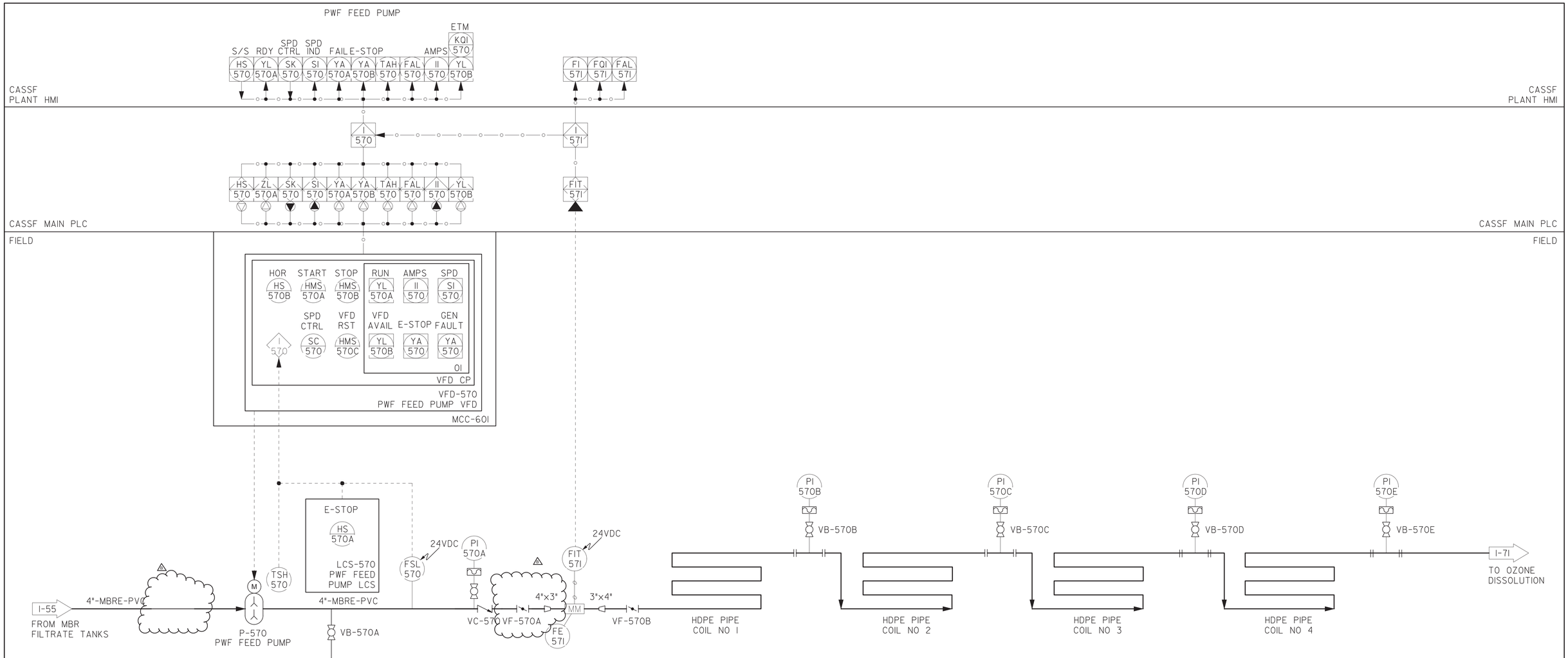

AWTP FEED PUMP AND PIPE LOOP P&ID

I-56

CENTRAL AREA SMALL-SCALE FACILITY
INSTRUMENTATION AND CONTROL
AWTP FEED PUMP AND
PIPE LOOP P&ID

CITY OF SAN DIEGO, CALIFORNIA
ENGINEERING AND CAPITAL PROJECTS DEPARTMENT
SHEET 199 OF 264 SHEETS

WBS B-21151

APPROVED FOR CITY ENGINEER: ALICE ALTES — PRINT DCE NAME — 10/13/2022 DATE — C68286 RCE#

SUBMITTED BY: JOSEPH QUICHO, PROJECT MANAGER
CHECKED BY: MICHAEL VIOLANTE, PROJECT ENGINEER

DESCRIPTION	BY	APPROVED	DATE	FILMED
ORIGINAL	STN		10/22	
B ADDENDUM B	STN		12/22	

CCS27 COORDINATE
CCS83 COORDINATE
DRAWING NO. 0100179-199-D
E93

CONSULTANT: Stantec, Brown AND Caldwell, Trussell TECHNOLOGIES INC

REGISTERED PROFESSIONAL ENGINEER — DAVID WILCOXSON — No. C57213 — Exp. 9-30-24 — CONTROL SYSTEM — STATE OF CALIFORNIA
12/09/22

CONTRACTOR
INSPECTOR
NTP DATE
NOC DATE

B RELOCATED VALVE VF-570A

ADDENDUM B

FILENAME: CASSF-I-56.DWG

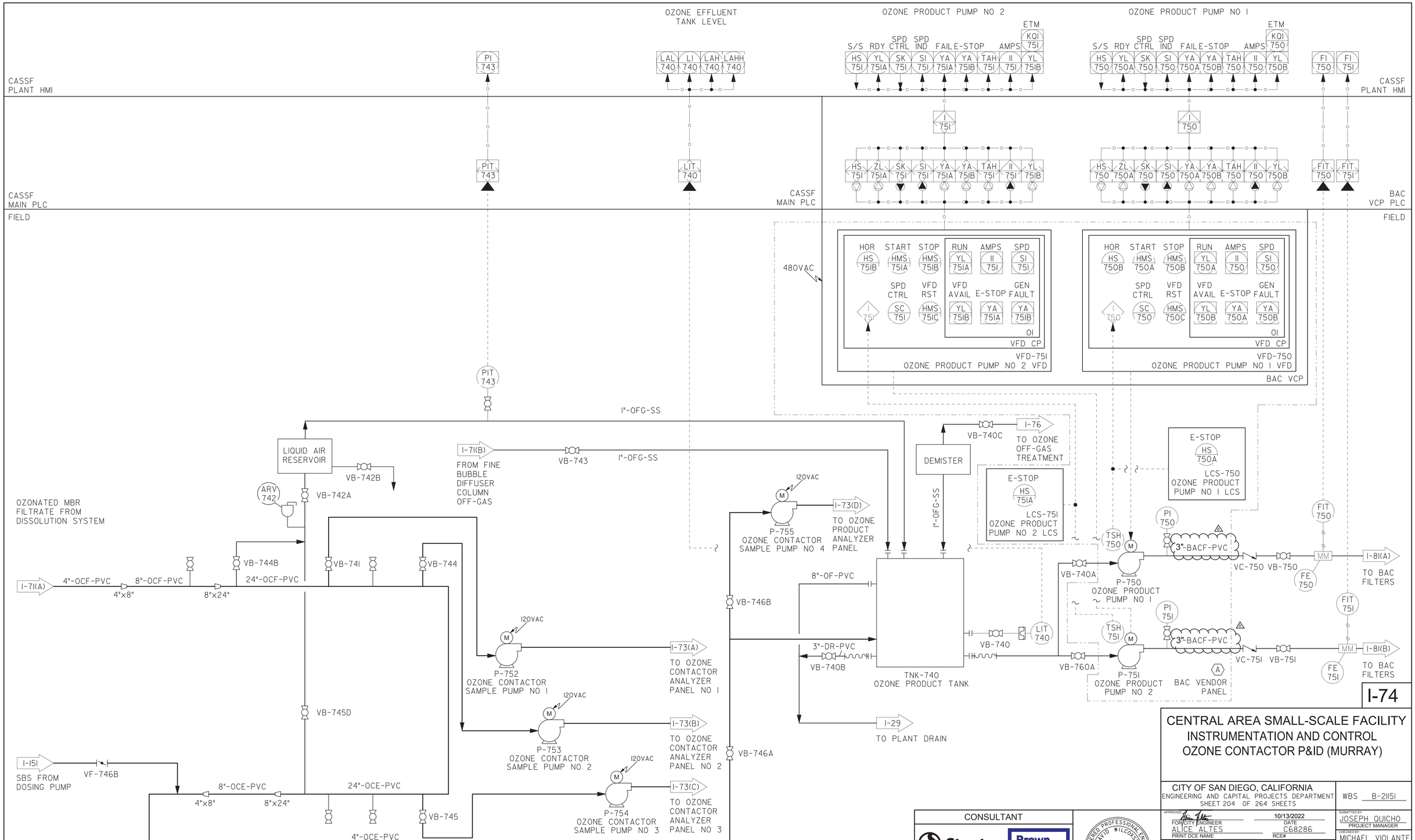

KEYNOTES:

(A) OZONE/BAC SYSTEM SUPPLIER FURNISHED. PRE-INSTALLED AND PREWIRED.

OZONE CONTACTOR P&ID (MURRAY)

I-74

CENTRAL AREA SMALL-SCALE FACILITY
INSTRUMENTATION AND CONTROL
OZONE CONTACTOR P&ID (MURRAY)

CITY OF SAN DIEGO, CALIFORNIA
ENGINEERING AND CAPITAL PROJECTS DEPARTMENT
SHEET 204 OF 264 SHEETS

WBS B-2II5I

CONSULTANT: Stantec, Brown AND Caldwell, Trussell TECHNOLOGIES INC

APPROVED FOR CITY ENGINEER ALICE ALTES, PRINT DCE NAME, RCE# C68286, DATE 10/13/2022

SUBMITTED BY: JOSEPH QUICHO, PROJECT MANAGER

CHECKED BY: MICHAEL VIOLANTE, PROJECT ENGINEER

REGISTERED PROFESSIONAL ENGINEER DAVID WILCOXSON No. C57213 Exp. 9-30-24 CONTROL SYSTEMS STATE OF CALIFORNIA 12/09/22

DESCRIPTION	BY	APPROVED	DATE	FILMED
ORIGINAL	STN		10/22	
(B) ADDENDUM B	STN		12/22	

CCS27 COORDINATE

CCS83 COORDINATE

CONTRACTOR
INSPECTOR
NTP DATE
NOC DATE

DRAWING NO. 0100179-204-D

E98

(B) REVISED SIZING OF BACF PIPING FROM 2" TO 3"

ADDENDUM B

FILENAME: CASSF-I-74.DWG

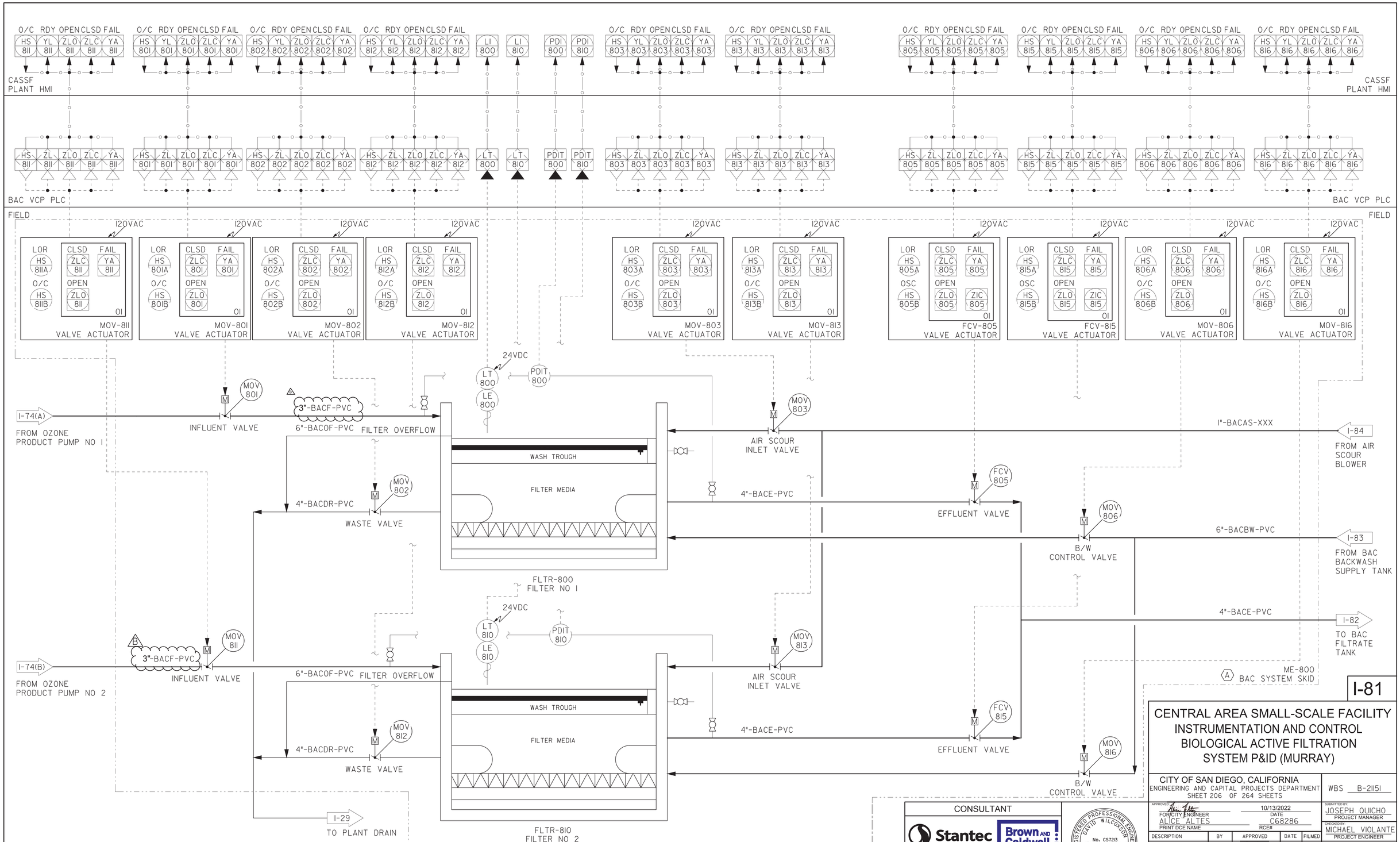

KEYNOTES:

(A) OZONE/BAC SYSTEM SUPPLIER FURNISHED. PRE-INSTALLED AND PREWIRED

I-81

CENTRAL AREA SMALL-SCALE FACILITY INSTRUMENTATION AND CONTROL BIOLOGICAL ACTIVE FILTRATION SYSTEM P&ID (MURRAY)

CITY OF SAN DIEGO, CALIFORNIA
ENGINEERING AND CAPITAL PROJECTS DEPARTMENT
SHEET 206 OF 264 SHEETS

WBS B-21151

APPROVED: FOR CITY ENGINEER ALICE ALTES — 10/13/2022 DATE — C68286 RCE#

SUBMITTED BY: JOSEPH QUICHO, PROJECT MANAGER
CHECKED BY: MICHAEL VIOLANTE, PROJECT ENGINEER

DESCRIPTION	BY	APPROVED	DATE	FILMED
ORIGINAL	STN		10/22	
(B) ADDENDUM B	STN		12/22	

CCS27 COORDINATE
CCS83 COORDINATE

CONSULTANT: Stantec, Brown AND Caldwell, Trussell TECHNOLOGIES INC

REGISTERED PROFESSIONAL ENGINEER — DAVID WILCOXSON — No. CS7213 — Exp. 9-30-24 — CONTROL SYSTEM — STATE OF CALIFORNIA — 12/09/22

CONTRACTOR
INSPECTOR
NTP DATE
NOC DATE

DRAWING NO. 0100179-206-D — E100

BIOLOGICAL ACTIVE FILTRATION SYSTEM P&ID (MURRAY)

(B) REVISED SIZING OF BACF PIPING FROM 2" TO 3"

ADDENDUM B

FILENAME: CASSF-I-81.DWG

December 20, 2022
Pure Water Program (PWP) Central Area Small Scale Facility

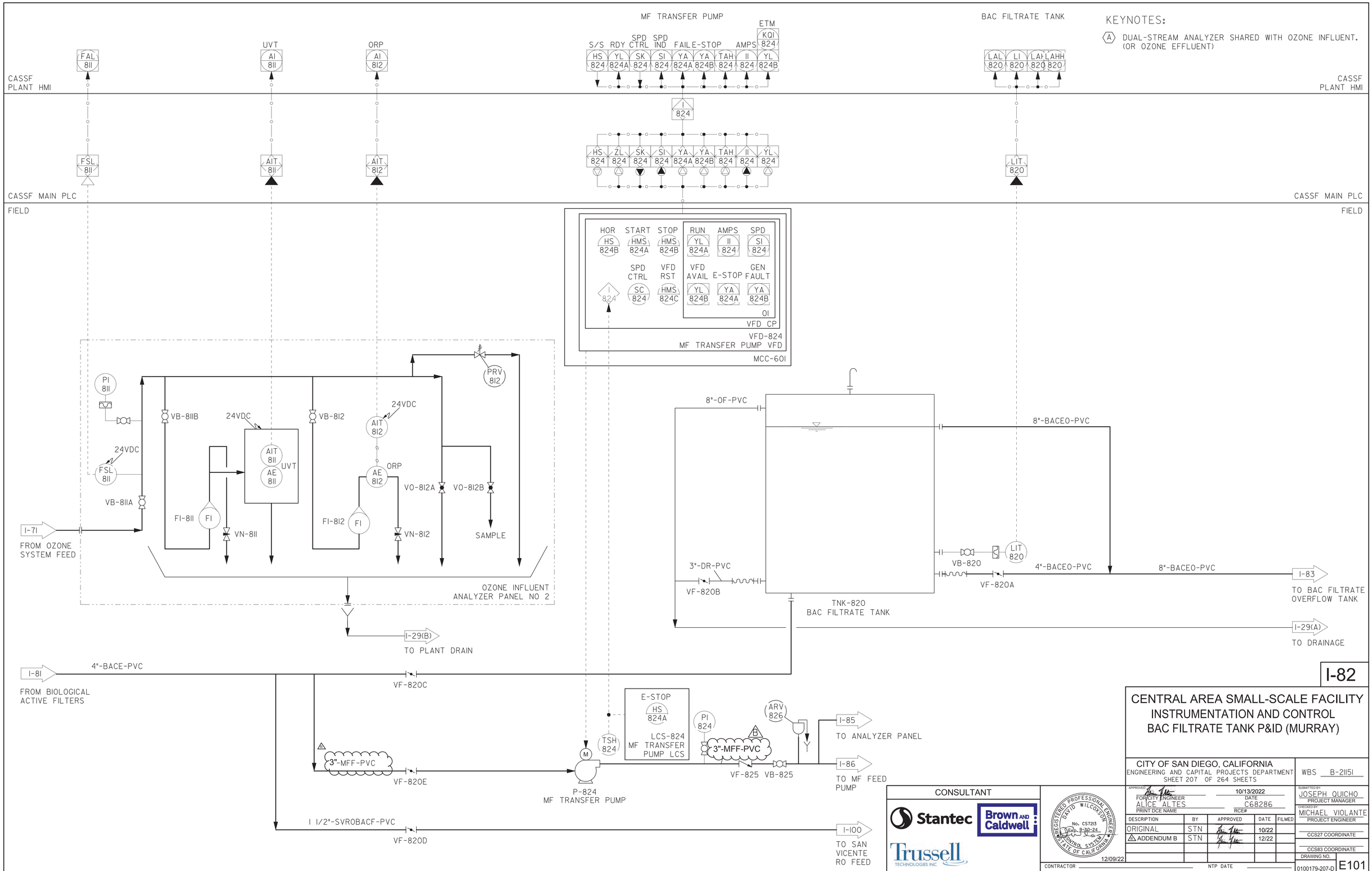

BAC FILTRATE TANK P&ID (MURRAY)

I-82

CENTRAL AREA SMALL-SCALE FACILITY
INSTRUMENTATION AND CONTROL
BAC FILTRATE TANK P&ID (MURRAY)

CITY OF SAN DIEGO, CALIFORNIA
ENGINEERING AND CAPITAL PROJECTS DEPARTMENT
SHEET 207 OF 264 SHEETS

WBS B-2I15I

APPROVED FOR CITY ENGINEER ALICE ALTES — DATE 10/13/2022 — RCE# C68286

SUBMITTED BY JOSEPH QUICHO, PROJECT MANAGER

CHECKED BY MICHAEL VIOLANTE, PROJECT ENGINEER

DESCRIPTION	BY	APPROVED	DATE	FILMED
ORIGINAL	STN		10/22	
(B) ADDENDUM B	STN		12/22	

CONSULTANT: Stantec, Brown AND Caldwell, Trussell TECHNOLOGIES INC

REGISTERED PROFESSIONAL ENGINEER DAVID WILCOXSON No. CS7213 Exp. 3-30-24 CONTROL SYSTEM STATE OF CALIFORNIA 12/09/22

CONTRACTOR
INSPECTOR
NTP DATE
NOC DATE

CCS27 COORDINATE
CCS83 COORDINATE

DRAWING NO. 0100179-207-D E101

FILENAME: CASSF-I-82.DWG

(B) REVISED SIZING OF MFF PIPING FROM 4" TO 3"

ADDENDUM B

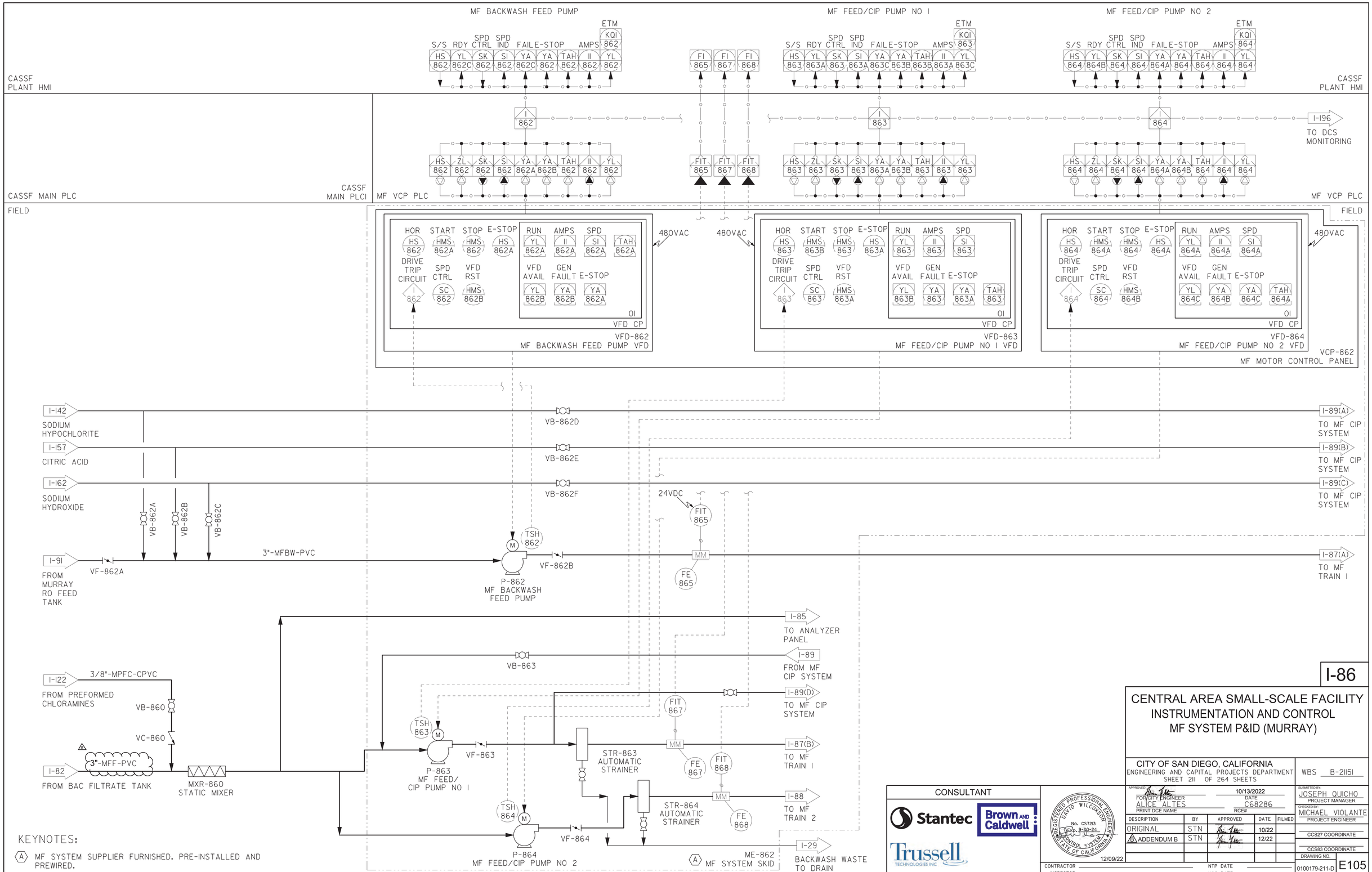

FILENAME: CASSF-I-86.DWG

December 20, 2022
Pure Water Program (PWP) Central Area Small Scale Facility

City of San Diego

CITY CONTACT: Brittany Friedenreich, Senior Contract Specialist, Email: BFriedenreic@sandiego.gov
Phone No. (619) 533-3104

ADDENDUM C

e - Bidding

FOR

PURE WATER PROGRAM (PWP) CENTRAL AREA SMALL SCALE FACILITY

BID NO.:	**K-23-2119-DBB-3-C**
SAP NO. (WBS/IO/CC):	**B-21151**
CLIENT DEPARTMENT:	**2000**
COUNCIL DISTRICT:	**2**
PROJECT TYPE:	**BO, BI**

BID DUE DATE:

2:00 PM

JANUARY 12, 2023

CITY OF SAN DIEGO'S ELECTRONIC BIDDING SITE, PLANETBIDS

http://www.sandiego.gov/cip/bidopps/index.shtml

ENGINEER OF WORK

The Engineering Specifications and Special Provisions contained herein have been prepared by or under the direction of the following Registered Engineer:

	12/29/2022	Seal:
1) Registered Engineer	Date	

	12/29/2022	Seal:
2) For City Engineer	Date	

A. CHANGES TO CONTRACT DOCUMENTS

The following changes to the Contract Documents are hereby made effective as though originally issued with the bid package. Bidders are reminded that all previous requirements to this solicitation remain in full force and effect.

B. BIDDER's QUESTIONS

Q1. The spec for these strainers (46 61 73 page 5) says the backwash valves are supposed to be pneumatically operated. The drawing 0100179-189-D E83 shows all the valves should be motorized. Which do you think is correct? Motorized? Or Pneumatic? Might as well point this out to you now versus later.

A1. The drawings show the valves correctly as motorized valves. The specification 46 61 73 has been updated to match the drawings. See Section D Supplementary Special Provisions, Item 28, included in this Addendum.

Q2. Section 46 61 36, Part 2.02.D.
Is it the design intent to be able to feed a single UF train, with 2 modules in service, the full 127 gpm feed flow or will both UF trains be required to be in service to achieve the full design flow of 127gpm? This question is to clarify the required piping sizing.

A2. The intent is to have two total modules in service at any given time. This can be achieved by running both trains with one module in service for each (typical) or one train with both modules in service and the other train out of service. See Section D Supplementary Special Provisions, Item 27 for updated clarity and relevant changes, included in this Addendum.

Q3. Section 46 61 36, Part 2.02.A.4.
Can you confirm that all compressed air required for air scour, valves and DITs will be provided by the central compressed air system provided by the contractor shown on Drawing I-27?

A3. Correct, there will be a central compressor which will provide all air demands for valve actuators shown on the Bid documents as well as scour air for MF System. See Section D Supplementary Special Provisions, Item 26, included in this Addendum.

Q4. Section 46 63 23.01, Part 2.12
The Conventional RO System is required to use electric actuated valves while the CCRO and FRRO systems have air actuated valves supplied by the shared compressed air system. Can the Conventional RO System also use air actuated valves with air supplied by the compressed air system shown on Drawing I-27?

A4. Air actuated valves for the Conventional RO System are acceptable as long as the Contractor coordinates with the equipment supplier on necessary design changes. The Contractor also needs to coordinate with the designer of record. It should also be noted that this could lead to other design modifications and that the Contractor is responsible for any associated costs or time delays including construction change permit reviews.

Q5. General Process Flow Diagram 1; G-10 and 46 61 33 Membrane Bioreactor System, section 1.01 D and 2.02D; The drawing states ML Flow is 747 gpm, MBR filtrate flow is 201 gpm, and RAS flow is 832 gpm; however, the flow balance is not matching the inlet flow to outlet flow. ML flow should be equal to MBR filtrate + RAS flow of 1,033 gpm. Are we planning to install an ML feed pump to operate the bioreactor with a lower depth than the membrane tank liquid level? Please confirm.

A5. The CASSF is intended to be capable of operating under several different scenarios. A table summarizing the proposed scenarios have been provided in Spec 46 41 40 and relevant changes included in this Addendum. In addition, Drawing G-10 has been updated to state which scenario and Spec 46 61 33 was also revised and included in this Addendum. See Section D Supplementary Special Provisions, Items 21, 23, and Drawing G-10, respectively, included in this Addendum.

Q6. MBR Filtrate/Backwash and RAS Pumping P&ID; Drawing no I-52;
MEMCOR CIP process includes a CIP recirculation within the membrane tank using a filtrate pump and we have seen more effective cleaning compared to soaking alone. The recirculation line can be used for off-spec water, and filtrate recirculation after cleaning to avoid the turbidity variance/chemical into the permeate tank. We will include two open/close valves in the discharge line and return lines to the membrane tank. Please confirm the same.

A6. Providing the CIP recirculation line valves as described is acceptable if that is a standard feature of the System Supplier. Per 46 61 33 - 2.02.B,

the Contractor is responsible to install a complete and operable system. If required by the MBR System Supplier, the cost for the installation of the valves and associated piping shall be included in the bid as needed.

Q7. MBR Filtrate/Backwash and RAS Pumping P&ID; Drawing no I-52; The filtrate suction line isolation valve should be an open/close valve to isolate during the pressure decay test.

A7. The filtrate suction line isolation valve is revised to an actuated valve. See updated Drawing I-52 included in this Addendum.

Q8. MBR System P & ID; Drawing no I-51; The tank drain valve is shown as a manual valve and we recommend open/close automatic valve. It is easy to isolate during CIP instead of manually draining every CIP cycle. There are two drain line valves: VP-500A and VP-500B. VP-500A is shown in MBR vendor scope of supply whereas 466133 Section 2.11, item A.8 shows as contractor scope of supply. Please clarify the scope and redundancy.

A8. The intent of the design is to minimize the number of actuated valves. If the System Supplier has a preference to automate the valve, please include the associated cost in the bid. Valve VP-500A will remain as a manual valve. Tank drain line VP-500B will be eliminated from requirements.

Q9. Area 4 BNR tank; Drawing M-06; BNR tank dimension is indicated as 10'W x 51'L x 23'H. It should be field erect tank and difficult to transport and deliver as an entire pre-assembled tank with the stated dimension in the bid. Is field assembly acceptable?

A9. Field assembly is acceptable. Specification 43 40 04 Welded Steel Tanks have been updated. See Section D Supplementary Special Provisions, Items 13, 14 and 15, included in this Addendum.

Q10. 46 41 40 Biological Nutrient Removal System, Section 1.01 A; The bid states "This section, together with section 46 61 33 and other sections of the Contract Documents, specifies the requirements for the Goods and Special Services to be provided by a single wastewater system supplier (WWSS). The WWSS shall be the vendor responsible for supplying the Biological Nutrient Removal (BNR) system and coordinating the Membrane Bioreactor (MBR) system, including design,

manufacturing, factory testing, and delivery of materials and equipment." Can the MBR supplier supply the equipment specified in section 46 61 33 MBR system and work with suppliers and contractors for 46 41 40 BNR portion?

A10. The wastewater system supplier can work with others in providing the system as long as the WWSS takes responsibility for the performance of the combined BNR and MBR Systems.

Q11. 40 05 64 Butterfly Valves;
MBR valves specified with AWWA C504. We would like to offer Bray ANSI butterfly valves for the MBR system. Please confirm the same.

A11. Bray valves are acceptable as an equal product to the specified valves as confirmed in Addendum B.

Q12. MBR Filtrate/Backwash and RAS Pumping P&ID; Drawing no I-52;
MEMCOR recommends an automatic diaphragm valve in the hypo chlorite and citric dosing lines.

A12. There does not seem to be any benefit in automating those valves. The dedicated chemical feed pumps will start and stop as needed controlling chemical dosing. No automatic valves are required or provided.

Q13. MBR System P & ID; Drawing no I-51,
MEMCOR recommends VB-500B as a solenoid valve instead of a manual valve.

A13. Revision of valve from ball valve to solenoid valve, if required for proper operation of the MBR system, is acceptable.

Q14. MBR System Analyzer Panel P & ID; Drawing no I-54;
Ammonia and NO3/NO2 analyzer are shown in the MBR system supplier scope of supply whereas 46 61 33 MBR system specification section 2.02 scope table did not include that. Please confirm the scope.

A14. Ammonia and NO3/NO2 analyzers are the responsibility of the MBR System Supplier per Drawing I-54. Specification Section 40 91 12 updated to include the analyzers and relevant changes are included in this Addendum. See Section D Supplementary Special Provisions, Item 10 and 11, included in this Addendum.

Q15. MBR Filtrate/Backwash and RAS Pumping P&ID; Drawing no I-52;
Please confirm the FCV 420C Motorized control valve scope of supply and it is indicated in the MBR scope of supply.

A15. It is intended for the FCV to be provided by the wastewater system supplier.

Q16. MBR Filtrate/Backwash and RAS Pumping P&ID; Drawing no I-52 & MBR System P & ID; Drawing no I-51;
MBR Filtrate suction line 6” instead of 8” and 4” indicated in the drawing. MBR air line shall be revised as 3” based on our maximum air flow.

A16. The 4"-MBRE-PVC is correct. Drawing I-51 updated in Addendum B. MBR air scour line is shown as 4" currently. If a smaller line is adequate for the proposed system, please proceed accordingly with proper explanation. No changes made on Drawings.

Q17. Please reference drawings M-03 and I-32. Drawing M03 shows three plug valves highlighted by Keynotes 19 and 21. On P&ID I-32, these valves are shown to be ball valves. Please clarify the correct valve type for these three valves.

A17. The referenced valves shall be ball valves for strainer drain line as shown on the P&IDs.

Q18. Drawing M-03 calls out two plug valves with Keynote 19. This Keynote refers to a single flow control valve. Please clarify what Keynote should be listed for these two valves.

A18. Keynote 29 added to drawing to identify these two valves as ball valves and updated Drawing M-03 included in this Addendum.

Q19. Drawing M03 calls out a single plug valve with Keynote 21. This Keynote refers to a pressure gauge. Please confirm that Keynote 19 should be listed for this single plug valve instead. Also, Please confirm where Keynote 21 should refer to on drawing M-03.

A19. Keynote 30 added to drawing to identify valve as MOV332 and updated Drawing M-03 included in this Addendum.

Q20. Specification section 40 05 01. 1.02.F of spec section 40 05 01 calls out for "Section 40 05 02 - Piping System Schedules". This specification

section cannot be found in the provided specifications. This spec section contains critical information for materials relating to the various piping systems. Please provide this section.

A20. Section 40 05 02 is not applicable and the reference is deleted from spec Section 40 05 01. See Section D Supplementary Special Provisions, Item 5, included in this Addendum.

Q21. Spec 46 61 73 calls for the valves on the automatic strainer to be pneumatically operated, however, on Sheet I-34 the valves are shown to be motor operated. Please clarify which type of valves are to be used.

A21. Spec Section 46 61 73 revised and relevant changes included in this Addendum. See Section D Supplementary Special Provisions, Item 28, included in this Addendum.

Q22. Drawing M09 lists multiple cut sections that should appear on drawing M09 as well. Please clarify which pages these cut sections are actually on.

A22. The sections are shown on drawings M-10 and M-11. Updated Drawing M-09 included in this Addendum.

Q23. Drawing M06 along with other mechanical drawings show multiple pipe penetrations into concrete structures. No specific detail concerning how these penetrations should look can be found in the drawings. Also, no clarification if the pipe penetration material should match the pipeline material can be found. Please advise on both of these items.

A23. M-06 does not have pipe penetration. All piping in Area 4 is above grade and not penetrating concrete structures; it runs across or in parallel of the concrete structure wall/slab. Area 1 has pipe penetrations and has been revised. Pipe penetration material shall match the pipeline material. Details for embedded drain lines are shown in detail M5077 and M5078 on M-28, as noted on the relevant process mechanical sections.

Q24. Drawings I-51 and I-52. Drawing I-51 calls out for an 8"-MBRF-PVC line, which continues onto drawing I-52. Drawing I-52 and the associated mechanical drawings show no such line. Please confirm if the 8"-MBRF-PVC line should instead be the 4"-MBRE-PVC line.

A24. Confirmed, line should be 4"-MBRE-PVC. Drawing I-51 updated in Addendum B.

Q25. Drawings M10 and I-55. Drawing M10 shows a "6-DR-PVC" which cannot be found on any other drawing. The drain does not appear on the P&ID drawing I-55 either. Please advise.

A25. The pipe shown on Drawing M-10 should be "8"-MBRE-PVC" and connects tanks TNK-550 to TNK-560. See updated Drawing M-10 included in this Addendum.

Q26. Drawings M10, I-55, and I-56. Drawing M10 calls out for butterfly valves VF-560 and flowmeter FIT-571 on the inlet side of the PWF Feed pump P-570. P&ID's I-55 and I-56 show a different configuration where two butterfly valves are located on the inlet side of the feed pump. Also, the flowmeter is shown on the discharge side of the pump. Please advise if the P&IDs or mechanical drawings should be followed.

A26. The arrangement shown on the P&IDs is correct. Drawings M-9 and M-10 revised to reflect the correct arrangement and included in this Addendum.

Q27. Drawings M10 and I-55. Drawing I-55 shows an 8"-DR-PVC line connecting into the 4"-MBRE-PVC line with an isolation butterfly valve. Drawing M10 does not show such a connection or line. The only drain in this area is coming off TNK-550 and immediately discharges off the side of the slab. Please advise if this line and subsequent butterfly valve actually exist, if so please provide a drawing showing the routing of this pipe.

A27. Valve VF-550C is not required and is deleted from the P&IDs. Updated Drawing I-55 is included in this Addendum.

Q28. Specification Section 46 33 42.16 for Hydraulically Driven Diaphragm Pumps calls for these pumps to be supplied by the RO System Supplier. Referencing Part 2.08 (Antiscalant Addition) and 2.09 (Sulfuric Acid Addition) of Section 46 63 23.01, it is stated that the "Contractor shall provide chemical dosing pump, piping, and controls." Please confirm that the Contractor is to supply all of the Antiscalant and Sulfuric Acid Hydraulically Driven Diaphragm Pumps within its scope of supply.

A28. Correct, the Contractor shall supply the antiscalant and sulfuric acid diaphragm pumps. This was corrected in Section 46 33 42.16 in Addendum B.

Q29. Sheet G-15 calls for 2 (1 Duty, 1 Standby) Peristaltic Pumps for Ammonium Sulfate Murray MF UV/AOP & SV Train UV/AOP Feed services, while Specification Section 46 33 44, Part 1.01.B and Sheet I-138 only shows 1 Peristaltic Pump for this application. Please advise which is correct.

A29. Single peristaltic pump is correct. Note on Drawing G-15 updated and included in this Addendum.

Q30. Specification Section 43 25 40.01, Part 2.01.A.1.a calls for the Plant Drain Pump Station to be 6'-0" inside diameter. Sheet M-24, Section B shows the inside diameter as 17'-8 1/4". Furthermore, both named precast manufacturers have stated they will no-bid this scope of work as currently called for. Please see PDF attachment outlining an alternate solution that we can obtain a quote for. Please revise the specification to indicated the desired options for the available packaged drain pump stations.

A30. Process Drain Pump Station sump inside diameter shall be 6'. For the Process Drain Pump Station, an alternate shape with equivalent sump size is acceptable. For the Stormdrain Pump Station the rectangular shape with the specified dimensions are critical. For both pump stations, no integral valve vault is required. If the suppliers are not willing to work with the above constraints, Contractor can build the sumps and get the pumps separately per the specifications and assume the unit responsibility. Updated Drawing M-24 included in this Addendum.

Q31. Please confirm if concrete slabs supported by CIDH foundations require subgrade over-excavation.

A31. For revised geotechnical report. See Section D Supplementary Special Provisions, Item 1, included in this Addendum.

Q32. Specification Section 31 23 00, Part 3.01.C.8 calls for trench width to be "18-inch greater than aggregate width of pipes, conduits, cables, duct banks". Please confirm if concrete encased duct banks can be excavated to duct bank width and placed up against native soils in lieu of trenching the additional width and installing formwork.

A32. No exceptions taken to pouring the ductbank against native soil if the trench walls are stable during excavation and required spacing (from the walls) is maintained for the conduits.

Q33. Specification Section 46 33 42.16 calls for the Hydraulically Driven Diaphragm Pumps to have a maximum motor size of 0.5hp in Part 1.01.D.2.a and a minimum motor size of 0.5hp in Part 2.04.A.2. Please clarify which is correct.

A33. The specification for the diaphragm metering pumps (Section 46 33 42.16) has been revised. See Section D Supplementary Special Provisions, Item 19, included in this Addendum.

Q34. Specification Section 46 33 42.16, Part 1.01.D.2.a calls for the Hydraulically Driven Diaphragm Pumps (P-1631/2/3/4) to have a minimum chemical feed rate of 0.00004 gph. One of the named manufacturers has stated they cannot achieve such a low flow rate and has proposed a product that could meet a minimum flow rate of 0.0007 gph. Please confirm if this would be acceptable for the intended application.

A34 The specification for the diaphragm metering pumps (Section 46 33 42.16) has been revised and relevant changes included in this Addendum. The Grundfos DDA 7.5 pump achieves the requirements of this chemical dosing application. See Section D Supplementary Special Provisions, Item 19, included in this Addendum.

Q35. Chemical Strainers:
P&ID DWGs which show the fill stations (DWG I-131, for example), and DWG M22 clearly show a “wye” strainer, however spec 46 07 10 calls for a basket-type strainer but does not indicate if this is only for certain chemicals or for all. Please clarify strainer for chemical lines.

A35. Wye strainers are acceptable for chemical fill lines.

Q36. Section 40 91 12, Par. 2.08 - The listed TOC analyzer in 2.08C does not meet the letter of the specification as listed in 2.08A and 2.08B. Please clarify the specification.

A36. Section 40 91 12 Part 2.08 was revised to include the desired TOC meter specifications. This revision was included in Addendum B. Locations for the TOC analyzers are also clarified as part of this Addendum. See Section D Supplementary Special Provisions, Item 12, included in this Addendum.

Q37. Section 46 41 40 - The BNR tank dimensions of 10' x 23' x 51' is too large to be fabricated in a factory and shipped to site. Please consider fabrication of sub assemblies to be done in a factory and field welding of the finished product.

A37. Field assembly is acceptable. Specification 43 40 04 Welded Steel tanks have been updated. See Section D Supplementary Special Provisions, Item 15, included in this Addendum.

Q38. Section 46 41 40 - Could the BNR tank be comprised of a concrete bottom tank with the walls being fabricated from metals?

A38. No, the tank shall be with steel bottom as specified.

Q39. Section 46 41 40 - Can the BNR tank be provided by the general contractor provided that the design is approved by the WWSS?

A39. The BNR Tanks can be provided by the Contractor as long as the wastewater system supplier takes responsibility for the performance of the combined BNR and MBR Systems.

Q40. During the bid walk it was discussed that overhead electrical lines would be interfering with portions of the work in Area 7 and possibly others. Sheet S21 in the bid drawings includes a note stating that the (E) overhead power lines cannot be moved. Please confirm if temporarily re-routing these lines for the project or installation of insulating barriers is acceptable. If so, please confirm if coordination with the utility agency, temporary re-route for construction, installation of insulating barriers, and restoration at project completion will be the responsibility of the City or Contractor. Otherwise, please provide a suitable design that allows for the safe construction of the work around and under the overhead power lines.

A40. As described in the Drawings, the overhead power lines feed the existing PLWTP and hence can't be shutdown or relocated. The Contractor shall plan to complete the construction without a shutdown or relocation of the line. Necessary precautions such as installing barriers, use of shorter equipment etc. shall be followed.

Q41. In order to efficiently place the BNR process into operation, introduction of seed sludge from a local facility would greatly accelerate the process

for proper mixture results. Otherwise, waiting for the BNR process to produce a proper mixture could delay start-up by approx. 4-6 weeks. Please confirm the City will assist the Contractor by locating and providing the seed sludge necessary for start-up of the facility.

A41. The City can assist in providing access to the seed sludge. Contractor shall plan to pick up the sludge from one of the existing City of San Diego Wastewater Treatment Plants (e.g. North City Water Reclamation Facility) with secondary treatment and use it for CASSF startup.

Q42. In specification 03 30 50 Article 3.01, part A requires three test shafts shall be constructed for the load testing described in Article 3.02 of the same specification. Please confirm these three test piles are to each be tested with its own method of compression, tension and lateral loading, and other support piles required to perform these tests will be placed in addition and as necessary.

A42. Number of indicator piles has been reduced to two which must be tested for compression loading. If failure occurs additional testing may be required. If failure does not occur and there are no changes in methods, equipment or materials used no additional testing is required unless a pile is flagged by the special inspector. Spec Section 03 30 50 updated and relevant changes included in this Addendum. See Section D Supplementary Special Provisions, Items 1 through 4, included in this Addendum

Q43. Specification 03 30 50 Article 3.02 describes load test methods required for the acceptance of the indicator CIDH piles described in Article 3.01 of the same spec. While load testing CIDH piles is achievable, it is expensive and cumbersome. Due to the time constraints on the project and the critical path nature of the CIDH work, Gamma-Gamma testing may be a cheaper and faster alternative. Please confirm if Gamma-Gamma testing would be approved for pile testing and acceptance.

A43. Gamm-Gamma logging is not an acceptable substitution as it measures only concrete homogeneity rather than soil-pile interaction.

Q44. Detail A on Sheet S-30 states the following: “Provide STD hook or HRC-555 headed bars (ICC ESR-2935) or approved equal. Headed bars not permitted at 60’-0” pile.” The project specifications reference that temporary casing may be needed to stabilize the drilled holes, however,

temporary casing cannot be used if the rebar has Standard Hooks at the top of the vertical bars. Please confirm if HRC-555 headed bars are able to be used on all piles.

A44. HRC-55 headed bars can be used for all piles provided Detail B/S-30 is used.

Q45. The Specifications do not allow for the use of the wet-hole drilling method utilizing Polymer drilling additives for soil stabilization. Based on the attached list of approved materials and Caltrans Standard Specifications for drilled shaft soil stabilization, please confirm it is acceptable to use the wet-hole drilling method for piles on this project.

A45. Based on the geotechnical investigation and knowledge of geology, use of slurry does not appear to be appropriate at this site. Wet hole drilling method is not acceptable.

Q46. Connection to equipment - In referencing 40 05 06.16 2.02 D 1-3 for the PA / MBRAS stainless steel piping on DWG M06 there is only one FCA drawn for the PA piping connection. Is the intent to have two FCA's abutting, with a 3"- 4" long stainless steel pe x pe spool in between for the PA piping at equipment on M06? DWG M10 doesn't provide the MBRAS equipment connection with FCA's. Is it the intent to also provide (2) FCA's at the 90 where it connects to equipment?

A46. Spec section 40 05 06.16 has been revised to show equipment connection fitting are not used and relevant changes included in this Addendum. Contractor to follow what is shown on drawings. See Section D Supplementary Special Provisions, Item 6, included in this Addendum

Q47. In 13 34 23.25, please advise the material for Pre-Fabricated Electrical Equipment Enclosure, 1.01-D calls for “Fabricated metal enclosure designed to be moved and installed as a single unit” while 2.03-B calls for a cement structure “enclosure roof, walls, and floor shall be constructed of 5,000 psi minimum reinforced concrete” . Could you please clarify if cement structure is needed.

A47. The material of construction shall be metal per clarification and updated documents issued in Addendum B.

Q48. Drawing E-08 indicates site grounding for the prefabricated electrical building. There are no site grounding plans for the facility or equipment.

Please confirm that grounding (circuits) per single line diagrams are sufficient and that no additional grounding is required.

A48. Confirmed. New power distribution equipment enclosures shall be bonded to the ground ring around the prefabricated equipment enclosure as shown on drawing E-08. Field metallic enclosures shall be bonded via the equipment grounding conductor shown with the circuits on the single lines and control riser diagrams.

Q49. On Page M21, General note (1) states that all overhead Chemical pump Discharge piping to be double contained. Does this note apply to the piping that extends past the underground trench and into area 4,5,6?

A49. Yes. The chemical lines shall be either double contained pipe or PFA Tubing in carrier pipes outside the respective chemical storage containments.

Q50. Please confirm whether the bottom piping connecting the MBR Filtrate Tanks and their drains are 8" Round (Based on page M-09 & E92) or 6" Round (based on page M-10)

A50. The referenced pipe shall be 8" consistent with Drawing I-55.

Q51. Section View C/M-06 shown on M-08 shows an 8" IMLR line behind the intake to the pump. There appears to be a handwheel for a valve as well as some additional equipment in the "BEHIND" piping but nothing detailed on the P&ID (E85) or shown in the plan view for Area 4. Please provide an additional cross section facing East Northeast or revise the existing drawings.

A51. There are no handwheel valves on the "BEHIND" 8" IMLR line. The Drawing I-42 aligns with what is shown on plan view M-06 (check valve and plug valve on the discharge side of the pump). The appurtenances in question belong to the IMLR pump which is a referenced centrifugal pump. Drawing M-11 shows more of the referenced pump that the IMLR line covers.

Q52. TNK-1200 RO Permeate Carrier Water Tank on page M-17 is described in Key Note 9 as having a 5/8"-PFCF and 1" PCFC connection. On the tank schedule there is no detail connection 5/8" in size. Please revise to show where and what size this connection is to take place on the tank.

A52. On Drawing M-31, the nozzle shown as 0.375" revised to 5/8" to match the piping. Updated Drawing M-31 is included in this Addendum.

Q53. Typical Analyzer Panel drawing I-26 shows the panel draining to a plant drain location. On C-11 there are no plant drain locations show at these panel locations. Please revise to include these drains in the site plan.

A53. Per Note 1 on Drawing C-11, the Contractor shall coordinate the drain locations and lines. The drains from the analyzers can either be routed to one of the drain locations shown on Drawing C-11 or additional drain points can be considered in the bid price.

Q54. Sheet M-24 shows 3' x 3' double-leaf Access Hatch. Is this hatch required to be occasional traffic rated or heavy duty traffic rated?

A54. The access hatch shall be traffic rated.

Q55. We have completed our initial outreach to the applicable SLBE and ELBE companies for this project. We have received numerous responses from SLBE/ELBE companies that they will not be providing a quote on this project due to the project having a PLA. With this PLA requirement reducing the already limited pool of subcontractors it is requested that the SLBE/ELBE participation be reduced.

A55. The SLBE/ELBE participation will not be reduced.

Q56. On drawing M-16 key note 5 refers to the Murry RO Feed Tank as TNK-900. This tank number is not found in the Polyethylene tank spec section. In that section TNK-1000 is named the RO Feed Tank. Please confirm these are referring to the same tank and there is just an error with the numbering. If not please revise spec to include design criteria for the tank.

A56. The item was clarified and updated documents issued in Addendum B.

Q57. We request the following changes be made to the grinder specification in 46 24 23: Section 1.01D2.a.2.a: Change motor to 3 Hp for this application.
Section 2.01A: Change Disposable Waste Systems to JWC Environmental.
Section 2.04A: Delete items 1-3 The specified cutter cartridge includes items 1-3.

Section 2.04A: Delete item 5: Guide rails are not used for the specified inline grinder.

A57. Spec Section 46 24 23 is updated to incorporate the requested changes. See Section D Supplementary Special Provisions, Items 16, 17 and 18, included in this Addendum.

Q58. Clarification for the blowers specified in Spec Section 43 11 33 Helical Screw Rotary Lobe PD Blowers: In Spec Section 43 11 33 Helical Screw Rotary Lobe PD Blowers 1.02.D.2.a-l, the spec appears to be calling for wire to air testing of these blower packages. This is not recommended for units this small (30 HP), as the testing cost far outweighs the benefits of the power consumption verified by the testing. I respectfully request that you revise the required factory testing to require testing per ISO-1218, Annex B which is testing on the blower stage/blower core to verify flow and power consumption.

A58. The intent is to test the blower assembly completely (that includes all accessories and controls) at the factory for proper function. Wire to air efficiency is not a requirement. The Supplier's test procedure shall take this into consideration. No changes made to the specification.

Q59. Regarding Section 400564.2.02 B. We have standardized on Bray Series 2L with 390 Trim (DI/NDI/416/EPDM) with Bray Series 92 Pneumatic actuators, due to the economical price point and robust/reliable design. The specification calls for AWWA C504. The Bray valves do not meet this and to meet the AWWA C504 the price increase is significant. Will the Bray valves be acceptable?

A59. The Bray valves are acceptable if that is provided as a standard offering. Actuators shall be per Drawings unless the Supplier can coordinate with the Contractor on associated Design Changes including verifying (and upsizing if needed) of the compressed air system.

Q60. Comments on Specification Section 43 24 41 – Positive Displacement Rotary Lobe Pumps
Please add Netsch Pumps USA as approved equal in section 2.01.A.1

A60. Netsch can not be added as an equal product at this time. If the Supplier is confident of the qualifications, and has enough reference projects, please submit as an equal product.

Q61. Comments on Specification Section 43 24 41 – Positive Displacement Rotary Lobe Pumps
Section 2.07.B stats piggyback configuration. Please confirm inline or piggyback configuration

A61. To confirm provide piggyback configuration per specification.

Q62. Comments on Specification Section 43 24 41 – Positive Displacement Rotary Lobe Pumps
Adjusting max allowable HP (spec lists 10HP for both – the ~750GPM pump needs at least 20HP, preferably 25HP and the 168GPM pump needs about 9.5HP to run, we'd recommend a 15HP).

A62. The Spec Section 43 24 41 and drawings have been updated to reflect higher horsepower for both pumps and relevant changes included in this Addendum. See Section C Addendum, Item 1, included in this Addendum. Note that the capacity of 750 gpm pump was revised to 1040 gpm in Addendum B.

Q63. Section 46 63 23.01, Part 2.02.E.6 states the RO membrane elements will be provided by the Contractor. Is there a specification for the RO elements so that the contractor knows what type of RO elements are to be provided? Or will the RO elements be purchased separately after award so that the cost of these are not to be included in the bid price?

A63. RO Membranes are specified in Spec Section 46 63 23.04.

Q64. Specification 40 05 59.23 Fabricated Slide Gates. Please add Fontaine-Aquanox as an acceptable manufacturer to section 2.01.A.1. Fontaine-Aquanox has attached its California installation list, contractor references, sample O&M, and brochures to support its request to be considered an acceptable manufacturer. California installations include City of San Diego facilities North City WRP and Point Loma WWTP. Photo of Fontaine-Aquanox gate at Point Loma WWTP can be seen on page 2 of Fontaine's brochure.

A64. Spec Section 40 05 59.23 updated to list Fontaine - Aquanox. See Section D Supplementary Special Provisions, Item 8, included in this Addendum.

Q65. Clarification for Spec Section 40 05 57.23 Powered Actuators: Also, FCV-420 is missing from Part 4 Schedule in Section 40 06 20.13 POWER ACTUATED VALVE AND GATE ACTUATOR SCHEDULE FOR PROCESS SERVICES? EMTT applies to gate FCV-420. Please provide ACTUSPEC

sheet for EMTT Actuator Type and schedule details for FCV-420. We need definition on whether FCV-420 is located in a non-classified area and has 480/3/60 power supply, as well as any other applicable details.

A65. Spec Sections 40 05 57.23 and 40 06 20.13 have been updated and relevant changes included in this Addendum. The actuator will be a 120V/1 Phase/50Hz actuator located in a non-classified area. See Section D Supplementary Special Provisions, Items 7 and 9, included in this Addendum.

C. ADDENDUM

1. To Addendum B, Section E Supplementary Special Provisions, Item17, Section 43 24 41 Positive Displacement Rotary Lobe Pumps, Part 2 Products, Item 2.03 Performance/Design Criteria, Subitems **C Performance Requirements** and **D Design Requirements** pages 31 to 32, **DELETE** in its entirety and **SUBSTITUTE** with the following:

C. Performance Requirements:

Operating Condition	**Value**	**Value**
Equipment	P-570	P-430
Rated operating condition		
Capacity, gpm	168	1,040
Total head, psi	41	-2.4
Minimum operating condition		
Capacity, gpm	148	340.3
Total head, psi	34	-4.0
Maximum operation		
Capacity, gpm	168	1,040
Total head, psi	41	-2.4

D. Design Requirements:

Item	Value	Value
Equipment number	P-570	P-430
Pump		
Drive type	Closed-coupled block (Type B)	Closed-coupled block (Type B)
Piping connection size, inches		
Pump suction	4	8
Pump discharge	4	8
Operating speed at rated capacity, rpm, maximum	275	275
Operating speed, rpm, maximum	400	400

Item	Value	Value
Equipment number	P-570	P-430
Variable frequency drive (VFD)	Yes	Yes
Motor (See Section 43 05 21)		
Horsepower, maximum	15	30
Type (See Section 43 05 21)		
Inverter duty	Yes	Yes
Space heater	No	No
Thermal protection	Yes	Yes
Ambient duty rating	+40	+40
Operating speed, rpm, maximum	500	500
Voltage rating	460-volt, 3 Phase	460-volt, 3 Phase
Hazardous rating	None	None
Reversing motor	No	No
Multispeed motor	Yes	Yes
Motor starting type	VFD, coordinate for proper starting of driven equipment.	VFD, coordinate for proper starting of driven equipment.

2. To Addendum B, Section G, Plans, Sub section 1 Plans, Drawing numbers **0100179-1-D**, **0100179-11-D**, **0100179-52-D**, **0100179-55-D**, **0100179-70-D**, **0100179-83-D**, **0100179-98-D**, **0100179-194-D**, **0100179-195-D**, **DELETE** in their entirety and **REPLACE** with Drawing numbers **0100179-1-D**, **0100179-11-D**, **0100179-52-D**, **0100179-55-D**, **0100179-70-D**, **0100179-83-D**, **0100179-98-D**, **0100179-194-D**, **0100179-195-D** of this Addendum.

D. SUPPLEMENTARY SPECIAL PROVISIONS

1. To Attachment E, Section 3 Control of Work, Sub section 3-9 Technical Studies and Subsurface Data, Item 6, page 51, **DELETE** in its entirety and **SUBSTITUTE** with the following:

3-9 TECHNICAL STUDIES AND SUBSURFACE DATA. To the "WHITEBOOK", ADD the following:

5. In preparation of the Contract Documents, the designer has relied upon the following reports of explorations and tests at the Work Site:

   a) Report of Geotechnical Investigation dated December 21, 2022, by Allied Geotechnical Engineers Incorporated.

6. The reports listed above are available for review at the following link:

   https://drive.google.com/drive/folders/1OmRUW9qXLghy3ZtBOrmjrAnrWKglsHuP?usp=sharing

2. To Attachment E, TECHNICALS, Section 03 30 50 Cast-in-Drilled-Hole Piles, Part 1 General, Item 1.03 Referenced, **Sub Item A**, page 335, **DELETE** in its entirety and **SUBSTITUTE** with the following:

   A. The references listed below are a part of this section. Where a referenced document contains references to other standards, those documents are included as references under this section as if referenced directly. In the event of conflict between the requirements of this section and those of the listed documents, the requirements of this section shall prevail.

Reference	Title
ACI 315R	Manual of Engineering and Placing Drawings for Reinforced Concrete Structures
ASTM D1143	Standard Test Methods for Deep Foundations under Static Axial Compressive Load

3. To Attachment E, TECHNICALS, Section 03 30 50 Cast-in-Drilled-Hole Piles, Part 3 Execution, **Item 3.01 Indicator Piles**, page 356, **DELETE** in its entirety and **SUBSTITUTE** with the following:

   3.01 INDICATOR PILES

   A. The Contractor shall demonstrate the adequacy of the methods and equipment to be employed for excavating shafts and confirm the axial load capacity of the piles by successfully constructing indicator piles~~.~~ A minimum of two Indicator piles shall be constructed. The indicator piles shall include drilling, reinforcing steel, thread bars, and concrete placement.

   B. Indicator piles–shall be positioned away from the drilled shafts in the location indicated or where approved by the Engineer in writing. Indicator piles shall be drilled to the maximum depth of any drilled shaft indicated.

   C. Failure to demonstrate the adequacy of methods and equipment shall be sufficient reason for the Engineer to require alterations in equipment and methods by the Contractor to eliminate unsatisfactory results.

   D. Once approval has been given to construct drilled shafts, no change will be permitted in the methods, equipment, or materials used to construct the satisfactory indicator pile without the written approval of the Engineer.

4. To Attachment E, TECHNICALS, Section 03 30 50 Cast-in-Drilled-Hole Piles, Part 3 Execution, **Item 3.02 Load Tests**, pages 356 to 357, **DELETE** in its entirety and **SUBSTITUTE** with the following:.

3.02 LOAD TESTS

A. Requirements:

1. The Contractor shall perform compression load tests, as required to determine whether or not the shafts can carry and withstand the imposed loads. Tests shall be performed on the Indicator piles. Except for shafts required for testing, additional shaft construction will not be permitted until the load tests are completed.
2. The Contractor shall provide all equipment and apparatus as required to conduct the tests.
3. The Contractor shall install, remove, relocate, and reinstall weights and components as necessary to perform and complete the tests.
4. Tests can be conducted as soon as practicable after the concrete in each drilled shaft has attained the specified 28-day compressive strength, but not until at least 10 days have elapsed after placing the concrete.

B. Compression Load Tests: Tests shall be performed in accordance with ASTM D1143. Method of load test shall follow "Quick Load Test Method for Individual Piles" as specified in ASTM D1143, Section 8.1.2. The maximum test load shall be at least twice the design load as prescribed by the Engineer. Apply the load in increments equal to 10 percent of the maximum test load, with a constant time interval between increments of 5 minutes. Maintain the maximum test load for not less than 15 minutes, unless the shaft has failed as determined by the Engineer. Remove the test load in increments equal to 25 percent of the maximum test load, with a constant time interval between increments of 5 minutes.

5. To Attachment E, TECHNICALS, Section 40 05 01 Piping Systems, Part 1 General, Item 1.02 Related Sections, **Sub-item F Section 40 05 02 – Piping System Schedules**, page 581, **DELETE** in its entirety.

6. To Attachment E, TECHNICALS, Section 40 05 06.16 Piping Connections, Part 2 Products, Item 2.02 Mechanical Couplings, **Sub-item D. Equipment Connection Fittings**, pages 618 to 619, **DELETE** in its entirety.

7. To Attachment E, TECHNICALS, Section 40 05 57.23 Powered Actuators, Part 3 Executions, **Item 3.04 Actuator Specification (Actuspec) Sheets**, page 690, **ADD** the following:

H. Actuator Type: EMTT - 120 Vac, 1-Phase, 60-Hertz

Description: Electric Multi-Turn Throttling valve actuator

Construction:

Actuators shall be Limitorque model MX; Rotork IQS Multi-Turn (60-starts/per hour) or equal; modified as necessary to provide the specified features and to meet the specified operating requirements.

Controller: EMTT actuator controllers shall consist of a solid-state electronic, servo-amplifier comparator and an electro-mechanical reversing starter.

The controller shall accept an external 4 to 20 mAdc isolated position input signal into a maximum load of 250 ohms. A position feedback signal shall be provided: 4-20mA; and shall be generated by an absolute, microprocessor encoder, or a 1000-ohm potentiometer coupled directly to the shaft of rotary motion valves and to the actuator gear train of linear motion valves or gates.

The controller shall compare the input signal

with the feedback signal to produce an error signal. The controller shall cause the motor to move the valve or gate in a direction so as to reduce the magnitude of the error signal. The controller positioning accuracy shall be plus or minus 1.0 percent of travel or better.

Operating speeds shall be 12 inches per minute for linear actuators and 180 degrees per minute for rotary actuators or as specified in Section 40 06 20.13.

Controls: Control power shall be provided by an integral 120 volts AC, single-phase.

Actuators shall be provided with an integral control station that includes a "LOCAL/ REMOTE" selector switch, an "OPEN" pushbutton, a "CLOSE" pushbutton, and a "STOP" pushbutton.

When the "LOCAL/REMOTE" selector switch is in the "LOCAL" position, momentary operation of the "OPEN" or "CLOSE" pushbutton shall cause the actuator to drive the valve or gate to the appropriate limit.

When the "LOCAL/ REMOTE" selector switch is in the "LOCAL" position, momentary operation of the "STOP" pushbutton shall cause the actuator to stop.

When the "LOCAL/ REMOTE" selector switch is in the "REMOTE" position, the actuator shall move in response to the external position input signal, and the pushbuttons shall have no effect. When the selector switch is in REMOTE, provide a REMOTE status dry contact for monitoring.

Provide dry contacts for the valve full open and full closed positions.

Contacts shall be rated for 120V, 3 amps minimum.

8. To Attachment E, TECHNICALS, Section 40 05 59.23 Fabricated Slide Gates, Part 2 Products, Item 2.01 Acceptable Manufacturers, **Sub-Item A**, page 695, **DELETE** in its entirety and **SUBSTITUTE** with the following:

   A. Gates shall be all stainless steel construction. Acceptable manufacturers include the following:

      1. Stainless steel slide gate manufacturers:

         a. Whipps, Inc. Athol, Massachusetts

         b. Golden Harvest, Inc, Burlington, WA

         c. Waterman Industries, Exeter California

         d. Fontaine - Aquanox

         e. Or approved equal

9. To Attachment E, TECHNICALS, Section 40 06 20.13 Power Actuated Valve and Gate Actuator Schedule for Process Services, Part 4 Schedule, **Item 4.01 Actuated Valve And Gate Schedule**, page 763, **DELETE** in its entirety and **SUBSTITUTE** with the following:

Equipment Number	Valve/ Gate Specification	Service	Actuator Type	Actuator Enclosure, NEMA Type	Maximum Differential Pressure (psi)	Open/ Close Time (seconds)	Fail Position	Voltage (Voltage / Phase)	Maximum Power Demand, Amps	Device Net Communication	Remote Control Station	Notes
FCV-321	40 05 62.16	PE	EQTT-120V	4	40	60	LAST	120/1	By Vendor	No	No	
FCV-334	40 05 62.16	PI	EQTT-120V	4	40	60	LAST	120/1	By Vendor	No	No	
FCV-420	40 05 59.23	WAS	EMTT-120V	4	2	30	LAST	120/1	By Vendor	No	No	

Notes:

1. *Valves and actuators that are part of Vendor supplied packages are not included. Refer respective P&IDs and specifications.*
2. *Solenoid valves are not included in this schedule*

10. To Attachment E, TECHNICALS, Section 40 91 12 Process Analyzer Measuring Systems, Part 2 Products, Item 2.06 Ammonia and Nitrate, **Sub Item B**, page 894, **DELETE** in its entirety and **SUBSTITUTE** with the following:

B. Ammonia Gas Selective Electrode (GSE) Analysis System (***for MBR and*** AWTP)

1. Ammonia Analysis: ammonia in the sample is converted to ammonia gas. Only the gaseous ammonia gas passes through the gas-permeable membrane of the GSE electrode and is detected. and measured with a GSE.

2. The analyzer shall be able to detect ammonia over a minimum range of 0.02 to 5 mg/L NH3-N, with an accuracy of +/-3%

3. The minimum frequency of measurements shall be at least once every 5 minutes.

4. The analyzer shall have a display showing the measured ammonia concentration

5. The analyzer enclosure shall meet a minimum rating of NEMA 4X.

6. Locations:

   a. Murray Train MF Feed (AE/AIT 1004)

   b. San Vicente Train RO Feed (AE/AIT 861)

   c. MBR Filtrate (AE/AIT 541)

7. The ammonia GSE analysis system shall be as manufactured by:

   a. HACH Amtax sc Ammonium analyzer with sc200 controller

   b. Or approved equal

11. To Attachment E, TECHNICALS, Section 40 91 12 Process Analyzer Measuring Systems, Part 2 Products, Item 2.06 Ammonia and Nitrate, **Sub Item F**, page 896, **DELETE** in its entirety and **SUBSTITUTE** with the following:

F. Nitrate/Nitrite Analysis (for MBR filtrate and combined RO permeate): Nitrate and nitrite shall be measured by a probe employing a method based on absorption of UV light. The probe shall be of stainless steel and plastic construction, and sufficiently robust for permanent installation for continuous inline monitoring. The probe shall include a 1-m integral shielded cable for connection to a field-mounted analyzer/transmitter. The sensor shall be suitable for nitrate measurement in the range of 0.5 to 20 mg/L NO3-N.

1. Transmitter: The system shall be housed in a NEMA 4X enclosure suitable for wall, handrail or panel mounting. The system shall support a single or dual channel arrangement, 4-20 mA each, proportional to the measured variable. Operating ambient temperature range of 41°F to 104°F (at 10% to 95% humidity, non-condensing) shall be supported; however, system installation shall mitigate strong diurnal temperature fluctuations. The system transmitter shall include one limit dry contact per channel plus one general alarm dry contact. Integral LED display will indicate the measured value and operating keys and status LEDs will support secure user configuration.

2. Locations:

   a. Combined Murray train RO permeate line to RO flush tank. Analyzer AE/AIT1076

   b. MBR filtrate AE/AIT 542

3. Manufacturers: The nitrate/nitrite analysis system shall be as manufactured by:

   a. HACH Nitratax probe with sc200 controller

   b. Or approved equal

12. To Attachment E, TECHNICALS, Section 40 91 12 Process Analyzer Measuring Systems, Part 2 Products, Item 2.08 Total Organic Carbon, **Sub Items C. Locations**, **D. Approved Manufactures and E. General Analysis Systems,** page 898, **DELETE** in its entirety and **SUBSTITUTE** with the following:

    C. Locations:

        1. Ozone Influent and BAC Filtrate AE/AIT 822 (dual-stream)
        2. Murray Conventional 3-Stage RO Combined Permeate and San Vicente Conventional RO Combine Permeate AE/AIT 962 (dual-stream)
        3. Murray FRRO Combined Permeate and Murray CCRO Combined Permeate AE/AIT987 (dual-stream)

    D. Approved Manufacturers:

        1. The TOC analysis system shall be dual-stream and configured with outputs as indicated on the P&IDs. The analysis system shall be as manufactured by:

            a. Suez Sievers M5310 C TOC Analyzer
            b. Or approved equal.

    E. General: Analysis systems shall be furnished complete with a one year supply of active/inactive reagents (e.g., acid and oxidizer), replacement UV lamps, spare compressor (if applicable) and maintenance / cleaning kit. Refer to Section 40 91 00 Appendices for the complete instrument schedule.

13. To Attachment E, TECHNICALS, Section 43 40 04 Welded Steel Tanks, Part 2 Products, Item 2.01 General, **Sub Item C. Fabricators**, page 1176, **DELETE** in its entirety and **SUBSTITUTE** with the following:

    C. Fabricators: Tanks and sub-assemblies shall be fabricated by fabricators authorized to apply the applicable code symbols.

14. To Attachment E, TECHNICALS, Section 43 40 04 Welded Steel Tanks, Part 2 Products, Item 2.01 General, **Sub Item U. Manufacturers**, page 1178, **DELETE** in its entirety and **SUBSTITUTE** with the following:

    U. Manufacturers: Tanks and/or tank sub-assemblies shall be fabricated by reputable manufacturers, experienced in the design and fabrication of the specific tanks, familiar with

applicable local regulations, codes, fire and safety orders, and having a record of successful installations.

15. To Attachment E, TECHNICALS, Section 43 40 04 Welded Steel Tanks, Part 3 Execution, **Item 3.01 General,** page 1178, **DELETE** in its entirety and **SUBSTITUTE** with the following:

    A. Installation: The Contractor with supervision of the Manufacturer shall install welded steel tanks and appurtenances in accordance with the Shop Drawings, applicable codes, and the Contract Documents. The welded steel tanks may be field assembled and erected from fabricated sub-assemblies. Tank and sub-assembly deliveries shall be limited to no more than an 80,000 lb load (including cargo and truck) due to the site's access road load restrictions. IF the tanks are field assembled, lining and coating shall be completed in the field meeting all local regulations.

16. To Attachment E, TECHNICALS, Section 46 24 23 Inline Grinders, Part 1 General, Item 1.01, Description, Sub Item D. Design Requirements, **Number 2 CHARACTERISTICS**, page 1202, **DELETE** in its entirety and **SUBSTITUTE** with the following:

    2. Characteristics:

        a. Equipment furnished under this section shall conform to the following:

            1) Grinder

                a) Cutting chamber height, 5/16 inches

                b) Pipe size, 4 inches

                c) Rated capacity, 100 gpm

                d) Maximum pressure loss at rated flow, 0.75 feet

                e) Cutter teeth, 7 tooth

                f) Cutter tooth:

                (1) Height, 1/2 inches

                (2) Root diameter overlap, 1/16 inches

            2) Motor

                a) Horsepower, 3 hp, 230/460V, 3-Phase

                b) Type, TEFC

17. To Attachment E, TECHNICALS, Section 46 24 23 Inline Grinders, Part 2 Products, Item 2.01 Acceptable Products, **Sub Item A,** page 1204, **DELETE** in its entirety and **SUBSTITUTE** with the following:

    A. The in-line grinders shall be Muffin Monster 30000 Series as manufactured by JWC Environmental, MG-304 Macerator-Grinder as manufactured by Wiesmann Engineering, Inc. or approved equal, modified to provide the specified features and to meet the specified operating conditions.

18. To Attachment E, TECHNICALS, Section 46 24 23 Inline Grinders, Part 2 Products, Item 2.04 Spare Parts, **Sub Item A,** page 1206, **DELETE** in its entirety and **SUBSTITUTE** with the following:

    A. The following spare parts shall be provided for each grinder size:

        1. 1 cutter cartridge

19. To Attachment E, TECHNICALS, **SECTION 46 33 42.16 DIAPHRAGM METERING PUMP**, pages 1245 to 1254, **DELETE** in their entirety and **SUBSTITUTE** with pages 36 to 43 of this Addendum.

20. To Attachment E, TECHNICALS, Section 46 41 40 Biological Nutrient Removal System, Part 1 General, Item 1.01 General Description of Goods and Special Services, **Sub Item B**, page 1277 **DELETE** in its entirety and **SUBSTITUTE** with the following:

    B. The design of the BNR System as contained herein is specifically and uniquely tailored for the following equipment and systems:

        1. Dupont
        2. Suez Water Technologies & Solutions
        3. Or equal

21. To Attachment E, TECHNICALS, Section 46 41 40 Biological Nutrient Removal System, Part 1 General, Item 1.03 BNR System Description, **Sub Item B**, page 1278, **DELETE** in its entirety and **SUBSTITUTE** with the following:

    B. The bioreactor is configured as a Modified Ludzack-Ettinger (MLE), with an anoxic zone for nitrogen removal using the carbon in the Blended Primary Effluent (BPE), followed by aerobic zones.

Mixed liquor is pumped to the membrane tanks from where the RAS is pumped back to the DeOx zone to reduce the Dissolved Oxygen (DO) before returning to the anoxic zones. A small portion (10%) of the RAS will bypass the DeOx zone to the strainers. An IMLR pump returns mixed liquor from the end of the aeration zone 1 to the DeOx zone. The IMLR pump is included to allow for control of the MBR total suspended solids (TSS) for testing purposes. The hydraulic retention time (HRT) will be varied by varying the side water depth (SWD) in the BNR tank, there by varying the volume in the BNR tank. The BNR System and MBR Membrane System shall be capable of operating under several different scenarios. These scenarios are summarized in the table below.

	CEPT[1]		Densadeg		Potential Operation[2]
	w/ Carbon	w/o Carbon	w/ Carbon	w/o Carbon	
ML Pump, gpm	620	745	622	338	1,042
RAS, gpm	417	542	419	135	833
IMLR, gpm	833	295	833	701	0
MBR Filtrate, gpm[3]	203	203	203	203	208

1- Initial operation will be under condition for CEPT. Equipment will be capable of operating Densadeg conditions in future.
2 - Pumps shall be capable of operating in MBR Filtrate (1Q), RAS (4Q), and ML (5Q).
3 - Net MBR filtrate

22. To Attachment E, TECHNICALS, Section 46 41 40 Biological Nutrient Removal System, **THIS PAGE INTENTIONALLY LEFT BLANK**, page 1302, **DELETE** in its entirety.

23. To Attachment E, TECHNICALS, Section 46 61 33 Membrane Bioreactor System, Part 1 General, Item 1.01 General Requirements, **Table for Sub Item D**, page 1321, **DELETE** in its entirety and **SUBSTITUTE** with the following:

    D. The following table describes the flow rates of the MBR Membrane System:

Stream	**Flow Rate (gpm)**

Total Net Filtrate[1]	203
Total Influent to Bioreactor Tanks[2]	208
Average WAS Flow Rate[3]	(2.5)
Maximum ML Flow to Membrane Tanks	1040

24. To Attachment E, TECHNICALS, Section 46 61 33 Membrane Bioreactor System, Part 2 Products, Item 2.02 Scope by WWSS, **Sub Item D**, page 1328, **DELETE** in its entirety and **SUBSTITUTE** with the following:

    D. Design parameters for each pump and blower are shown in the following table, including maximum values for pump power. These parameters may be modified by the WWSS, and proposed modifications shall be submitted to the Engineer for approval.

Pump Name	**Design Flow**	**Design Pressure (psi)**	**Power (HP)**
Filtrate / Backwash Pump – Filtrate	216 gpm	11.5	10
RAS Pump	832 gpm	8.5	7.5
Membrane Scour Air Blower	Per MBR System Supplier	4.4	15
CASSF Air Compressor	38 scfm	140	10

25. To Attachment E, TECHNICALS, Section 46 61 33 Membrane Bioreactor System, Part 2 Products, Item 2.06 Membrane Tank and Membrane Modules, **Sub Item C**, pages 1330 to 1331, **DELETE** in its entirety and **SUBSTITUTE** with the following:

    C. The membrane system shall be designed for a gross flux rate of 15.1 gfd and minimum product recovery of 94% after accounting for backwash and/or relaxation losses. The project team intends to evaluate the performance of the membrane system at a flux of 18 gfd in the future by isolating certain membrane modules.

	Units	**Suez**	**DuPont**	**Koch**
Name of the Module		ZW500D	B40N	LE44

Number of Modules in Pilot		48	48	44
Membrane Surface Area per Module	ft^2	430	430	468
Minimum Membrane Surface Area Provided	ft^2	20,640	20,667	20,602
Average Instantaneous Design Flux	gfd	15.1	15.1	15.1
Average Instantaneous Design Flow	gpm	216	216	216
Membrane System Recovery	%	94	94	94
Average Net Design Flow	gpm	203	203	203
WAS Losses	%	2.8%		
Bioreactor Average Influent Flow	gpm	208		

26. To Attachment E, TECHNICALS Section 46 61 36 Membrane Filtration, Part 2 Products, Item 2.02 Minimum Design Criteria, **Sub Item A**, page 1341, **DELETE** in its entirety and **SUBSTITUTE** with the following:

    A. Major components of the MFS shall include, but not be limited to, the following:

        1. Membrane modules.

        2. Feed pumps.

        3. Automatic strainers.

        4. Automatic backwashing system, including backwash pump, that shall be plumbed for connection to central compressed air supply.

        5. Automatic maintenance clean system, including necessary solution mixing tanks, pumps and-controls.

        6. Automatic clean-in-place (CIP) system, including necessary solution mixing tanks, recirculation pumps, and controls.

        7. Process control system, including a master control panel and human-machine interface (HMI).

8. Process instrumentation, including, but not limited to, pressure gauges, turbidimeters, and flow meters.

9. Skid frame(s).

27. To Attachment E, TECHNICALS Section 46 61 36 Membrane Filtration, Part 2 Products, Item 2.02 Minimum Design Criteria, **Sub Item D**, page 1342, **DELETE** in its entirety and **SUBSTITUTE** with the following:

D. The net daily production of the MFS shall be 126 gallons per minute. The number of membrane modules required to satisfy the required daily production shall vary based on the membrane modules used and should be determined by the MFS Supplier. Both transmembrane pressure (TMP) and volume treated shall be capable of triggering a maintenance clean. The MFS shall be configured with the option to run at the design feed flow via one (1) train with two (2) modules in service or two (2) trains, with each train having one (1) module in service. The latter will be the primary mode of operation.

28. To Attachment E, TECHNICALS Section 46 61 73 Automatic Strainers, Part 2 Products, Item 2.04 Construction, **Sub Item F Backwash Line**s, page 1352, **DELETE** in its entirety and **SUBSTITUTE** with the following:

F. Backwash Lines:

1. Each strainer shall have backwash line connection with a motor_operated full port ball valve and a manual shutoff valve to be connected to drain (BNR tank strainers) or to primary influent channel (PI pump station) by the Contractor. The backwash line shall be SCH 40 PVC pipe.

2. Strainers shall be programmed to prohibit simultaneous backwashes. Multiple requests for backwash shall be done in sequence.

PLANS

1. To Drawing numbers **0100179-1-D**, **0100179-10-D**, **0100179-15-D**, **0100179-36-D**, **0100179-43-D**, **0100179-44-D**, **0100179-45-D**, **0100179-46-D**, **0100179-48-D**, **0100179-65-D**, **0100179-66-D**, **0100179-67-D**, **0100179-68-D**, **01000179-73-D**, **0100179-77-D**, **0100179-84-D**, **0100179-85-D, 0100179-105-D**, **0100179-112-D, 0100179-113-D, 0100179-124-D, 0100179-125-D, 0100179-127-D, 0100179-139-D, 0100179-198-D**, **0100179-210-D**, **0100179-221-D**, **0100179-232-D**, **DELETE** in their entirety and **REPLACE** with Drawing numbers **0100179-1-D**, **0100179-10-D**, **0100179-15-D**, **0100179-36-D**, **0100179-43-D**, **0100179-44-D**, **0100179-45-D**, **0100179-46-D**, **0100179-48-D**, **0100179-65-D**, **0100179-66-D**, **0100179-67-D**, **0100179-68-D**, **01000179-73-D**, **0100179-77-D**, **0100179-84-D**, **0100179-85-D, 0100179-105-D**, **0100179-112-D, 0100179-113-D, 0100179-124-D, 0100179-125-D, 0100179-127-D, 0100179-139-D, 0100179-198-D**, **0100179-210-D**, **0100179-221-D**, **0100179-232-D** of this Addendum.

Rania Amen, Director
Engineering & Capital Projects Department

Dated: *December 29, 2022*
San Diego, California

RA/AJ/na

SECTION 46 33 42.16
DIAPHRAGM METERING PUMPS

PART 1 GENERAL

1.01 DESCRIPTION

A. Scope: The section specifies, electronically-controlled variable-speed motor diaphragm metering pumps and associated appurtenances for chemical feed service in water and wastewater treatment applications. The pumps shall be supplied by the Contractor.

B. Type: Metering pumps shall be of the electronically controlled variable speed-motor type. The duration of each discharge stroke shall vary according to flow setpoint. Pumps shall operate at full stroke lengths with automatic, electronic adjustment and a turndown ratio of up to 1:3000. Pump output shall be rated at design operating temperature and be adjustable while the pump is operating. Pumps shall be simplex (single pump head) design. The Contractor shall furnish and install complete chemical metering systems with associated pump supports, controls, appurtenances and miscellaneous equipment to provide an operating installation as shown or otherwise specified. The Contractor shall coordinate with the Reverse Osmosis Equipment Manufacturer (Section 46 63 23.01), Closed Circuit Reverse Osmosis Equipment Manufacturer (Section 46 63 23.02), and Flow Reversal Reverse Osmosis Equipment Manufacturer (Section 46 63 23.03) to interface the chemical metering pumps with the reverse osmosis systems. The pump shall be suitable for the intended metering service with adjustable speed controls as required to provide the degree of dosing control described herein. Metering pumps shall be fully waterproof and suitable for installation outdoors or in wet processing areas.

C. Equipment List:

Equipment Description	Equipment Number
Sulfuric Acid Feed Pump 1	P-1441
Sulfuric Acid Feed Pump 2	P-1444
Sulfuric Acid Feed Pump 3	P-1446
Sulfuric Acid Feed Pump 4	P-1447
Antiscalant Feed Pump 1	P-1631
Antiscalant Feed Pump 2	P-1632
Antiscalant Feed Pump 3	P-1633
Antiscalant Feed Pump 4	P-1634

D. Performance and Design Requirements:

1. Service Conditions:

   a. The metering pumps and associated equipment specified in this section shall be designed and selected for pumping the following chemical solutions:

Chemical	pH	Solution Density (pounds per gallon @ 68° F)	Concentration Percent (wt/wt)
Sulfuric Acid	<1	15.26	93%
Antiscalant		10.4	100%

2. Operating Requirements:
   a. The metering pump(s) shall be designed for continuous service under the following design and operating conditions.

Equipment Number(s):	P-1441, P-1444, P-1446, P-1447	
Parameter	Design Value	Units
Minimum chemical feed rate	0.002	gph
Average chemical feed rate	0.04	gph
Maximum chemical feed rate	0.27	gph
Operating pressure	60	psi
Maximum Static Lift	-5	ft
Maximum motor size	0.5	hp
Power supply	120/60/1	V/Hz/phase

Equipment Number(s):	P-1631, P-1632, P-1633, P-1634	
Parameter	Design Value	Units
Minimum chemical feed rate	0.00004	gph
Average chemical feed rate	0.001	gph
Maximum chemical feed rate	0.011	gph
Operating pressure	60	psi
Maximum Static Lift	-5	ft
Maximum motor size	0.5	hp
Power supply	120/60/1	V/Hz/phase

1.02 QUALITY ASSURANCE

A. References:
   1. This section contains references to the following documents. They are a part of this section as specified and modified. Where a referenced document contains references to other standards, those documents are included as references under this section as if referenced directly. In the event of conflict between the requirements of this section and those of the listed documents, the requirements of this section shall prevail.
   2. Unless otherwise specified, references to documents shall mean the documents in effect at the time of Advertisement for Bids or Invitation to Bid (or on the effective date of the Agreement if there were no Bids). If referenced documents have been

discontinued by the issuing organization, references to those documents shall mean the replacement documents issued or otherwise identified by that organization or, if there are no replacement documents, the last version of the document before it was discontinued. Where document dates are given in the following listing, references to those documents shall mean the specific document version associated with that date, regardless of whether the document has been superseded by a version with a later date, discontinued or replaced.

Reference	Title
ASTM A743/A743M	Castings, Iron-Chromium, Iron-Chromium-Nickel, and Nickel-Base Corrosion-Resistant for General Application
NEMA MG 1	Motors and Generators
NEMA ICS 1	Industrial Control and Systems General Requirements

B. See Section 01 45 33 for additional requirements.

C. Submittals:
   1. The following submittals shall be provided as specified in Section 01 33 00:
      a. Shop drawings with complete dimensions and mounting details for the pumps and all appurtenances.
      b. Catalog data and information including:
         1) Maximum and minimum capacity using adjustable speed drive, gph; maximum and minimum operating speed, rpm; and discharge pressure.
         2) Motor information.
      c. Materials of construction.
      d. Net positive suction head required.
      e. Manufacturer's wiring diagram.
      f. Manufacturer's catalog data on all accessories including pressure regulating valves, pressure relief valves, chemical seals, pressure gauges, calibration chambers, pulsation dampeners, and suction assemblies.
      g. A copy of the contract document control diagrams and process and instrumentation diagrams relating to the submitted equipment, with addendum updates that apply to the equipment in this section, marked to show specific changes necessary for the equipment proposed in the submittal. If no changes are required, the drawing or drawings shall be marked "no changes required". Failure to include copies of the relevant drawings with the submittal shall be cause for rejection of the entire submittal with no further review.
      h. A copy of this specification section, with addendum updates included, and all referenced and applicable sections, with addendum updates included, with each paragraph check-marked to indicate specification compliance or marked to indicate requested deviations from specification requirements. Check marks (˜) shall denote full compliance with a paragraph as a whole. If deviations from the specifications are indicated and, therefore requested by the Contractor, each deviation shall be underlined and denoted by a number in the margin to the right of the identified paragraph. The remaining portions of the paragraph

not underlined shall signify compliance on the part of the Contractor with the specifications. The submittal shall be accompanied by a detailed, written justification for each deviation. Failure to include a copy of the marked-up specification sections, along with justification(s) for any requested deviations to the specification requirements, with the submittal shall be sufficient cause for rejection of the entire submittal with no further consideration.

i. A copy of all related contract schematic, structural, and mechanical drawings with all piping, foundations, supports, and layout sizes and dimensions requiring Contractor confirmation marked.

j. Certificate of Unit Responsibility attesting that the Contractor has assigned, and that the manufacturer accepts, unit responsibility in accordance with the requirements of this Section and Section 43 05 11-1.02 Unit Responsibility. No other submittal material will be reviewed until the certificate has been received and found to be in accordance with these requirements.

k. Operations and Maintenance Information per Section 01 78 23 – OPERATION AND MAINTENANCE DATA.

D. Unit Responsibility:

1. Assign unit responsibility, as specified in Section 43 05 11, to the metering pump manufacturer for the pumps, accessory components, mounting panels and control systems, necessary for proper equipment operation in accordance with the Control Strategy descriptions contained in Division 40 and associated Process and Instrumentation drawings. Provide a completed and signed certificate of unit responsibility (Section 01 99 90-Form 43 05 11-C).

PART 2 PRODUCTS

2.01 GENERAL

A. The manufacturer shall furnish all metering pump equipment to complete a properly functioning, integrated package. Unless otherwise specified, the metering pump system shall be factory assembled to the maximum extent possible. Factory assembly shall include all pumps, motors, bases, and appurtenant valves and fittings. Any components that are not factory assembled shall be shipped loose and packaged and labeled with complete instructions for field installation. No field welding shall be required.

B. The metering pump assembly shall be designed by the manufacturer to provide the necessary strength, stability, and stiffness for the intended application conditions. Equipment, piping, valves and controls shall be rigidly and accurately anchored to a support structure in the proper position and arrangement and to optimize access for maintenance. The support structure and mounting hardware shall be compatible with the chemicals being metered (corrosion-resistant), and shall be non-metallic unless otherwise specified.

2.02 ACCEPTABLE PRODUCTS

A. Diaphragm metering pumps shall be Grundfos DDA 7.5 (with internal drive) or approved equal.

2.03 METERING PUMPS

A. Metering pumps furnished under this Section shall be electronically controlled variable-speed motor (stepper motor) diaphragm pumps. Pumps shall be suitable for metering service, with constant operation at full stroke length. The duration of each stroke shall be varied based on flow setpoint and the integral variable speed motor shall be capable of a turndown of up to 1:3000.

B. Pumps shall be corrosion resistant with diaphragm, wet ends, gaskets, O-rings, and seals suitable for the pumped chemicals specified up to a minimum temperature of 125 degree F and the indicated working pressure. The pumps shall be self-priming and have a maximum suction lift of -5 feet of water.

C. Metering pump shall have the following functions: auto de-aeration, flow control with fault diagnosis, minimum and maximum pressure monitoring, external stop, and Profibus capability.

D. The pumps shall be suitable for service up to 125 psi. The pumps shall be suitable for metering service with a minimum flow accuracy of ± 1%. For each metering pump, the capacity shall be selected for the range of feed flow rates identified in 1.01 D.2. of this Section

2.04 PUMP MOTORS, DRIVES AND CONTROLS

A. Variable Speed Drives:
   1. Type:
      a. The pump shall be equipped with an integral variable-speed motor (stepper motor) for flow rate control.
   2. Drive shall be equipped with a face mounted keypad for adjusting drive parameters with interface to control panel mounted controls for start/stop, local-off-remote, manual flow regulation, and flow_indication as specified herein.
   3. In AUTO mode, the drive shall start and stop based on a control signal from the PLC indicated on the Drawings, with speed regulation based on an analog input signal (4-20 mA).
   4. Provide the following drive status outputs:
      a. Drive controller in AUTO mode, SPST dry contact rated 5A at 120 VAC.
      b. Drive controller ON, SPST dry contact rated 5A at 120 VAC.
      c. Drive controller FAIL, SPST dry contact rated 5A at 120 VAC.
      d. Drive controller SPEED, analog output signal, 4 – 20 mA dc.
   5. Alarm signals:

a. Each drive shall accept a minimum two shutdown signals. When either signal is energized, the drive shall shutdown via hardwired latching time delay control circuits, independent of control mode.
b. Provide SPDT dry contact for each alarm output, rated 5A at 120 VAC.
c. Discrete input signals from the PLC shown on the Drawings will be 24 VDC. Provide any interposing relays required to interface with the specified panel control circuits.

2.05 ACCESSORIES

A. The following accessories shall be provided by the manufacturer having unit responsibility:
1. Calibration Columns:
   a. Calibration columns shall be furnished where shown and shall be of clear PVC or Glass (for sulfuric acid) construction, graduated in both gph and milliliters. Columns shall be 30 ml in size or shall_allow 2 minutes of testing at the maximum pumping capacity of the system, whichever is smaller.
   b. Contractor shall install vent piping to a level above the maximum storage tank level to prevent overflow. Include a turndown on the vent pipe to prevent the ingress of dirt and debris. Vent pipe materials shall match the materials of low pressure piping for the system. Include support of the vent pipe as needed to prevent sway.
2. Back Pressure and Pressure Relief Valves:
   a. Backpressure valves shall apply a continuous discharge back pressure downstream of the metering pumps and also serve as anti-siphoning valves. Valves shall be capable of closing without an external source of pressure. The valve shall maintain a constant upstream pressure higher than the downstream injection pressure. When the pressure on the upstream side of valve reduces below the set pressure, the valve shall close, eliminating siphoning into the process line and/or back-mixing in the injection line. It shall also maintain pressure upstream of the valve following pump shutdown. Pressure setting shall be externally adjustable between 0 and 150 psig via a top mounted adjustment screw.
   b. Pressure relief valves shall be installed as shown and relieve pressure on the injection line. Valves shall be internal spring actuated diaphragm type, 3 port design. Valves shall be capable of closing without an external source of pressure. Relief pressure setting shall be externally adjustable between 0 and 150 psig via a top mounted adjustment screw.
   c. Materials of Construction:
      1) Body: Alloy 20 (Sulfuric Acid); CPVC (Threshold Inhibitor).
      2) Top (unwetted): Type 316 stainless steel (Sulfuric Acid); CPVC (Threshold Inhibitor)
      3) Diaphragm: PTFE faced EPDM
   d. Manufacturer: Griffco or approved equal
3. Relief Line Flow Indicators:

a. Pumps shall be supplied with a visual flow indicator installed in the relief valve exhaust line.
b. The indicator shall be of double wall construction with a Pyrex inner cylinder, plexiglass outer cylinder, and stainless steel fasteners. Flow indication shall be accomplished visually without the use of internal streamers or other moving parts.
c. Process Connections: 1/2-inch FNPT.
d. Port Materials: PTFE with Viton seals.
e. Manufacturer: Plastomatic Series GY or approved equal

4. Chemical Seals and Pressure Gauges:
   a. Chemical seal assemblies and pressure gauges shall be as specified in Division 40.

2.06 SPARE PARTS AND SPECIAL TOOLS

A. Spare parts and special tools required for maintenance of the pumps and accessory items shall be provided. One complete set of necessary spare parts, as recommended by the manufacturer, including seals, diaphragms, check valve assemblies, valve seats, and other parts subject to wear, for each pump.

PART 3 EXECUTION

3.01 GENERAL

A. Pumps shall be aligned, connected, and installed in strict accordance with the manufacturer's instructions.

3.02 INSTALLATION

A. The equipment shall be installed and tested under the direction of factory trained personnel as specified in Section 43 05 11. The installation shall be certified on Form 43 05 11-A specified in Section 01 99 90.

3.03 TESTING

A. After installation, the equipment specified in this section shall be completely tested to ensure compliance with operating requirements, varying pumps speeds with speeds and flows recorded in a test log. Pump systems shall initially be tested with clean water and then the chemical to be pumped. Field testing shall be in accordance with the testing procedures in Sections 01 91 13 and 01 91 14. Testing shall verify the control strategies specified in Division 40.

B. Following successful testing and commissioning of associated control loops, and prior to pumping chemical solution, the pump and chemical piping shall be emptied and dried. Piping in the sulfuric acid system shall be dried with compressed nitrogen.

3.04 TRAINING

A. Training, as specified in Section 01 91 13, shall be provided. Training shall be certified on Form 43 05 11-B specified in Section 01 99 99.

B. Provide 2 hours of training.

END OF SECTION

CENTRAL AREA SMALL-SCALE FACILITY

CONTRACTOR'S RESPONSIBILITIES

1. PURSUANT TO SECTION 4216 OF THE GOVERNMENT CODE, AT LEAST 2 WORKING DAYS PRIOR TO EXCAVATION, YOU MUST CONTACT THE REGIONAL NOTIFICATION CENTER (E.G. UNDERGROUND SERVICE ALERT OF SOUTHERN CALIFORNIA) AND OBTAIN AN INQUIRY IDENTIFICATION NUMBER.
2. NOTIFY SDG&E AT LEAST 10 WORKING DAYS PRIOR TO EXCAVATING WITHIN 10' OF SDG&E UNDERGROUND HIGH VOLTAGE TRANSMISSION POWER LINES. (I.E., 69 KV & HIGHER)
3. STORM DRAIN INLETS SHALL REMAIN FUNCTIONAL AT ALL TIMES DURING CONSTRUCTION.
4. UNLESS OTHERWISE NOTED AS PREVIOUSLY POTHOLED (PH), ELEVATIONS SHOWN ON THE PROFILE FOR EXISTING UTILITIES ARE BASED ON A SEARCH OF THE AVAILABLE RECORD INFORMATION ONLY AND ARE SOLELY FOR THE CONTRACTOR'S CONVENIENCE. THE CITY DOES NOT GUARANTEE THAT IT HAS REVIEWED ALL AVAILABLE DATA. THE CONTRACTOR SHALL POTHOLE ALL EXISTING UTILITIES EITHER SHOWN ON THE PLANS OR MARKED IN THE FIELD IN ACCORDANCE WITH THE 2021 GREENBOOK AND WHITEBOOK SPECIFICATIONS SECTION 402-UTILITIES.
5. EXISTING UTILITY CROSSING AS SHOWN ON THE PLANS ARE APPROXIMATE AND ARE NOT REPRESENTATIVE OF ACTUAL LENGTH AND LOCATION OF CONFLICT AREAS.
6. IMPORTANT NOTICE: SECTION 4216 OF THE GOVERNMENT CODE REQUIRES A DIG ALERT IDENTIFICATION NUMBER TO BE ISSUED BEFORE A "PERMIT TO EXCAVATE" WILL BE VALID. FOR YOUR DIG ALERT I.D. NUMBER, CALL UNDERGROUND SERVICE ALERT, TOLL FREE 1-800-422-4133, TWO DAYS BEFORE YOU DIG.
7. CONTRACTOR SHALL IMPLEMENT AN EROSION AND SEDIMENT CONTROL PROGRAM DURING THE PROJECT GRADING AND/OR CONSTRUCTION ACTIVITIES. THE PROGRAM SHALL MEET ALL APPLICABLE REQUIREMENTS OF THE STATE WATER RESOURCE CONTROL BOARD AND THE CITY OF SAN DIEGO MUNICIPAL CODE AND STORM WATER STANDARDS MANUAL.
8. DEVIATIONS FROM THESE SIGNED PLANS WILL NOT BE ALLOWED UNLESS A CONSTRUCTION CHANGE IS APPROVED BY THE CITY ENGINEER OR THE CHANGE IS REQUIRED BY THE CITY INSPECTOR.
9. AS-BUILT DRAWING MUST BE SUBMITTED TO THE RESIDENT ENGINEER PRIOR TO ACCEPTANCE OF THIS PROJECT BY THE CITY OF SAN DIEGO.

CONSTRUCTION STORM WATER PROTECTION NOTES

1. TOTAL SITE DISTURBANCE AREA (ACRES) 0.66
   HYDROLOGIC UNIT & WATERSHED PUEBLO SAN DIEGO HU/SAN DIEGO BAY
   HYDROLOGIC SUBAREA NAME & NO. POINT LOMA WATERSHED NO. 908.10

   THE CONTRACTOR SHALL COMPLY WITH THE REQUIREMENTS OF THE
   - ☐ MINOR WPCP
     THE PROJECT IS SUBJECT TO MUNICIPAL SEPARATE STORM SEWER SYSTEM (MS4) PERMIT NO. R9-2013-0001 AS AMENDED BY R9-2015-0001 AND R9-2015-0100
   - ☒ WPCP
     THE PROJECT IS SUBJECT TO MUNICIPAL SEPARATE STORM SEWER SYSTEM (MS4) PERMIT NO. R9-2013-0001 AS AMENDED BY R9-2015-0001 AND R9-2015-0100
   - ☐ SWPPP
     THE PROJECT IS SUBJECT TO MUNICIPAL SEPARATE STORM SEWER SYSTEM (MS4) PERMIT NO. R9-2013-0001 AS AMENDED BY R9-2015-0001 AND R9-2015-0100 AND CONSTRUCTION GENERAL PERMIT (CGP) ORDER 2009-0009-DWQ AS AMENDED BY ORDER 2010-0014-DWQ AND 2012-0006-DWQ
     TRADITIONAL: RISK LEVEL 1☐ 2☐ 3☐
     LUP: RISK TYPE 1☐ 2☐ 3☐

   CONSTRUCTION SITE PRIORITY
   ☐ ASBS ☐ HIGH ☒ MEDIUM ☐ LOW

B

PERMANENT STORM WATER BMP CATEGORY:

- ☒ PRIORITY DEVELOPMENT PROJECT
- ☐ STANDARD DEVELOPMENT PROJECT
- ☐ PDP EXEMPT
- ☐ NOT SUBJECT TO PERMANENT STORM WATER REQUIRMENTS

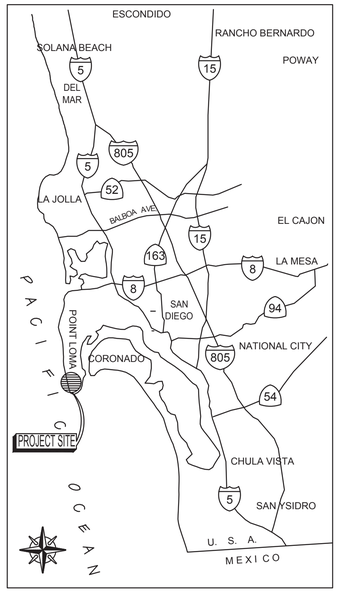

VICINITY MAP

DISCIPLINE CODE

G	GENERAL
D	DEMOLITION
C	CIVIL
S	STRUCTURAL
M	MECHANICAL
E	ELECTRICAL
I	INSTRUMENTATION

SHEET INDEX

FOR SHEET INDEX, SEE SHEET G-02

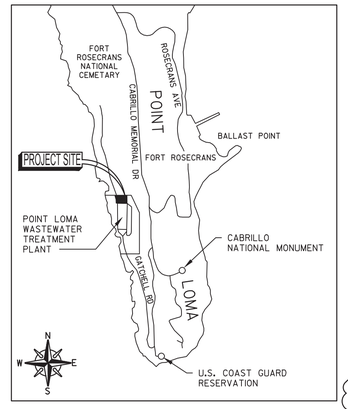

LOCATION MAP

FIELD DATA

BENCHMARK: SWBP CATALINA BLVD AND DUPONT RD

ELEV.= 302.365 MSL

FIELD NOTES:

BASIS OF BEARINGS / COORDINATES:

THE BASIS OF BEARINGS FOR THIS PROJECT WAS DERIVED FROM A PREVIOUS STATIC GPS SURVEY USING R.O.S. 14492 NAD 83 FEET, ZONE 6 (EPOCH 1991.35), UTILIZING RTK/GPS FIELD PROCEDURES WITH A SDSRN BASE STATION BROADCAST OF 2019.20 AND CONSTRAINING TO GPS 23, GPS 1119, GPS 1115 AND CHECKING GPS 1113 I.E. N 7°40'43" W

DATUM: MEAN SEA LEVEL BASED ON NGVD 29 FEET AS SHOWN IN THE CITY OF SAN DIEGO BENCH BOOK

REFERENCES: CITY OF SAN DIEGO SURVEY FIELD NOTES; LAPAGE, WO 192655,186-1692,7-19-1994 &0192331, 6-19-1995.

TOPOGRAPHY SOURCE: FROM AERIAL PHOTOGRAPHY

SOURCE OF SUPPLEMENTAL SURVEY:
O'DAY CONSULTANTS
2710 LAKER AVENUE WEST, SUITE 100
CARLSBAD, CA 92010
TEL: (760) 931 7700

STANDARD SPECIFICATIONS

STANDARD SPECIFICATIONS FOR PUBLIC WORKS CONSTRUCTION ("THE GREENBOOK") 2021 EDITION, INCLUDING THE CITY OF SAN DIEGO SUPPLEMENT ("THE WHITEBOOK" DOCUMENT ECP101010122-02) 2021 EDITION.

STANDARD DRAWINGS

CITY OF SAN DIEGO STANDARD DRAWINGS, DOCUMENT ECP101010122-03, 2021 EDITION.

LEGAL DESCRIPTION:

SAN BERNADINO MERIDIAN CALIFORNIA
T.17S, R.4W TRACT 38X

SITE ADDRESS

POINT LOMA WASTEWATER TREATMENT PLANT
1902 GATCHELL ROAD
SAN DIEGO, CALIFORNIA 92106

ASSESSOR'S NUMBER

532-520-06X

PROJECT DATA

NOTE: CASSF IS A SHORT TERM FACILITY TO DEMONSTRATE ADVANCED WATER TREATMENT PROCESSES. THERE IS NO BUILDING ON SITE. THE DETAILS BELOW ARE BASED ON THIS INPUT.

OCCUPANCY CLASSIFICATION(S): SEE DRAWING G-03
NUMBER OF STORIES (EXISTING & PROPOSED): N/A
HEIGHT OF BUILDING (EXISTING & PROPOSED): N/A
FLOOR AREA AND FLOOR AREA RATIO: N/A
TOTAL NEW FLOOR AREA ADDED: N/A
TOTAL EXISTING FLOOR AREA TO REMAIN PER STORY: N/A
CONDITION OF SOIL: COMPACT
LANDSCAPE AREA SQUARE FOOTAGE: NONE
TOTAL AREA OF DISTURBANCE: 22,150 SQ. FT.
LISTING OF DEFERRED SUBMITTALS: ANCHORAGE CALCULATIONS, SEE DRAWING S-02.
FIRE PROTECTION REQUIREMENTS: FIRE HYDRANT
APPLICABLE CODES: CBC 2019

OWNER

CITY OF SAN DIEGO
9192 TOPAZ WAY
SAN DIEGO CA. 92123 B
PHONE NUMBER 858-292-6479
PROJECT MANAGER NAME: JOSEPH QUICHO

ZONING

CONSTRUCTION TYPE: CAST-IN-PLACE CONCRETE
BUILDING TYPE: NONE
DISCRETION APPROVALS: NONE
BUILDING CODE YEAR: 2019
EXISTING USE OF BUILDING: NONE (NO BUILDINGS)
PROPOSED USE OF BUILDING: NONE (NO BUILDINGS)

PROJECT TEAM

BROWN AND CALDWELL	858-514-8822
STANTEC	858-751-1214
TRUSSELL TECHNOLOGIES	858-458-1030
WEST COAST CIVIL	858-869-1332
MARTIN AND LIBBY STRUCTURAL ENGINEERS	619-280-9307
ALLIED GEOTECHNICAL ENGINEERS, INC.	619-449-5900
SAN DIEGUITO ENGINEERING, INC.	858-345-1149
TSAC ENGINEERING	858-762-9611

WORK TO BE DONE (SCOPE OF WORK)

A. THE WORK CONSISTS OF PROVIDING A NEW WATER PURIFICATION DEMONSTRATION FACILITY NAMED "CENTRAL AREA SMALL-SCALE FACILITY" INCLUDING, BUT NOT LIMITED TO, PROCESSES, SUPPORT SYSTEMS, AND SITE WORK AS LISTED BELOW:
   1. PROCESS FACILITIES INCLUDING:
      a. PRIMARY INFLUENT AND PRIMARY EFFLUENT FEED PUMPS
      b. BLEND TANK
      c. BIOLOGICAL NUTRIENT REMOVAL (BNR) SYSTEM
      d. MEMBRANE BIO REACTOR (MBR) SYSTEM
      e. OZONE TREATMENT
      f. BIOLOGICAL ACTIVATED CARBON FILTRATION
      g. MEMBRANE FILTRATION
      h. REVERSE OSMOSIS
      i. ULTRAVIOLET / ADVANCED OXIDATION PROCESS
   2. SUPPORT SYSTEMS INCLUDING:
      a. CHEMICAL STORAGE AND DELIVERY SYSTEMS
      b. ELECTRICAL AND CONTROL
   3. PERFORM SITE WORK INCLUDING, BUT NOT LIMITED TO, GRADING, NEW PAVEMENT AND YARD PIPING.

B

B. STRUCTURAL SCOPE:
   1. STRUCTURES INCLUDE 2 ELEVATED STRUCTURAL SLABS ON PILE FOUNDATIONS (6,577 SQ. FT.) AND 3 MAT SLABS-ON-GROUND (3,443 SQ. FT.). ONE MAT SLAB WILL BE MODIFIED BY REMOVING (E) EQUIPMENT PADS, INFILLING A TRENCH AND ADDING TOPPING (1,860 SQ. FT.). NINETY SEVEN PIECES OF EQUIPMENT WILL BE ANCHORED AS WELL AS ONE 480 SQ. FT. PREMANUFACTURED ELECTRICAL TRAILER AND FOUR PREMANUFACTURED CLOTH CANOPIES TOTALING 2,362 SQ. FT. THERE ARE RETAINING WALLS TOTALING 134 LF FOR 3'-6" AND UNDER, 88 LF FOR 5'-6" AND UNDER AND 197 LF FOR 7'-6" AND UNDER.

C. DEFERRED APPROVALS

B
   1. (1) PREMANUFACTURED ELECTRICAL ENCLOSURE INCLUDING HVAC
   2. (4) PREMANUFATURED CLOTH CANOPIES

MONUMENTATION/SURVEY NOTES

THIS MAP WAS CREATED FROM A PARCEL LAYER AND DOES NOT DEPICT THE ACTUAL LOCATION OF THE PROPERTY LINES. NO BOUNDARY ANALYSIS WAS PERFORMED. THE SURVEY MONUMENTS HAVE BEEN LOCATED BY SURVEY GRADE MEASUREMENTS, AND ARE SHOWN FOR INFORMATIONAL PURPOSES ONLY.

THE CITY OF SAN DIEGO LAND SURVEYORS SHALL REPLACE SUCH MONUMENTS WITH APPROPRIATE MONUMENTS. WHEN SETTING SURVEY MONUMENTS USED FOR RE-ESTABLISHMENT OF THE DISTURBED CONTROLLING SURVEY MONUMENTS AS REQUIRED BY SECTIONS 6730.2 AND 8771 OF THE BUSINESS AND PROFESSIONS CODE OF THE STATE OF CALIFORNIA, A CORNER RECORD OR RECORD OF SURVEY, AS APPROPRIATE, SHALL BE FILED WITH THE COUNTY SURVEYOR.

IF ANY HORIZONTAL OR VERTICAL CONTROL IS TO BE DISTURBED OR DESTROYED, THE CITY OF SAN DIEGO FIELD SURVEY SECTION SHALL BE NOTIFIED IN WRITING AT LEAST 7 DAYS PRIOR TO CONSTRUCTION. THE CONTRACTOR SHALL BE RESPONSIBLE FOR THE COST OF REPLACING ANY HORIZONTAL CONTROL AND VERTICAL CONTROL BENCHMARKS DESTROYED BY THE CONSTRUCTION IF THE CITY OF SAN DIEGO SURVEY SECTION IS NOT NOTIFIED PRIOR TO CONSTRUCTION. THE FILING OF A CORNER RECORD OR RECORD OF SURVEY, AS APPROPRIATE SHALL BE FILED WITH COUNTY SURVEYOR. A COPY OF THE FILED DOCUMENT SHALL BE FURNISHED TO THE CITY OF SAN DIEGO SURVEY SECTION.

DECLARATION OF RESPONSIBLE CHARGE

I HEREBY DECLARE THAT I AM THE ENGINEER OF WORK FOR THIS PROJECT THAT I HAVE EXERCISED RESPONSIBLE CHARGE OVER THE DESIGN OF THE PROJECT AS DEFINED IN SECTION 6703 OF THE BUSINESS AND PROFESSIONS CODE AND THAT THE DESIGN IS CONSISTENT WITH CURRENT STANDARDS. I UNDERSTAND THAT THE CHECK OF PROJECT DRAWINGS AND SPECIFICATIONS BY THE CITY OF SAN DIEGO IS CONFINED TO A REVIEW ONLY AND DOES NOT RELIEVE ME, AS ENGINEER OF WORK, OF MY RESPONSIBILITIES FOR PROJECT DESIGN.

MADHAVAN JAYAKUMAR — R.C.E. NO. M34495 — DATE OF SIGNING 08/29/22

G-01

CENTRAL AREA SMALL-SCALE FACILITY

PLANS FOR THE CONSTRUCTION OF
CENTRAL AREA SMALL-SCALE FACILITY
COVER SHEET

CITY OF SAN DIEGO, CALIFORNIA
ENGINEERING AND CAPITAL PROJECTS DEPARTMENT
SHEET 1 OF 264 SHEETS

WBS B-21151

APPROVED: FOR CITY ENGINEER ALICE ALTES, PRINT DCE NAME — DATE 10/13/2022 — RCE# C68286

SUBMITTED BY: JOSEPH QUICHO, PROJECT MANAGER
CHECKED BY: MICHAEL VIOLANTE, PROJECT ENGINEER

DESCRIPTION	BY	APPROVED	DATE	FILMED
ORIGINAL	BC		10/22	
B ADDENDUM B	BC		12/22	
C ADDENDUM C	BC		12/22	

SEE EACH SHEET CCS27 COORDINATE
SEE EACH SHEET CCS83 COORDINATE
DRAWING NO. 0100179-1-D — CS01

SPEC. NO. 2119
REGISTERED PROFESSIONAL ENGINEER — MADHAVAN K JAYAKUMAR — NO. M34495 — MECHANICAL — STATE OF CALIFORNIA
12/27/22

CONTRACTOR
INSPECTOR
NTP DATE
NOC DATE

CONSULTANTS: Stantec, Brown AND Caldwell, Trussell TECHNOLOGIES INC

CONSTRUCTION CHANGE / ADDENDUM

CHANGE	DATE	AFFECTED OR ADDED SHEET NUMBERS	APPROVAL NO.
B	12-8-22	G-01, G-11, C-02, C-03, C-04, C-05, C-11, C-14, S-02, S-07, S-17, S-18, S-19, S-20, S-21, S-26, S-34, S-35, M-02, M-09, M-12, M-13, M-15, M-16, M-24, I-30, I-51, I-52, I-56, I-74, I-81, I-82, I-86	
C	12/27/22	G-01, G-10, G-11, G-15, S-01, S-08, S-09, S-10, S-11, S-13, S-17, S-20, S-30, S-31, S-32, S-33, S-35, S-38, M-03, M-09 TO M-11, M-24, M-31, E-06, E-07, E-21, E-22, E-24, E-41, I-51, I-52, I-55, I-85, I-97, I-108	

WARNING
0 1"
IF THIS BAR DOES NOT MEASURE 1" THEN DRAWING IS NOT TO SCALE.

The City of SAN DIEGO

C COVER SHEET UPDATED TO INCLUDE LIST OF ADDENDUM C DRAWINGS

B UPDATE HYDRAULIC SUBAREA NAME, CHANGE THE CONSTRUCTION SITE PRIORITY FROM HIGH TO MEDIUM, CORRECT OWNER'S ADDRESS, REVISE NOTES B AND C

ADDENDUM C

FILENAME: CASSF-G-01.DWG

GENERAL NOTES

1. SEE DRAWING G–09 FOR CORRESPONDING PROCESS FLOW DIAGRAM
2. △C BNR/MBR FLOWRATES ARE BASED ON CEPT WATER QUALITY CONDITION WITH CARBON ADDITION. SEE SPECIFICATION 46 41 40 FOR THE DIFFERENT TESTING CONDITIONS THAT MAY BE PERFORMED.

MAJOR PROCESS FLOW

FLOW #	DESCRIPTION	FLOW (GPM)
1	PRIMARY EFFLUENT	208
2	PRIMARY INFLUENT	80
3	BLEND TANK INFLUENT	208
4	MIXING PUMP EFFLUENT	208
5	BNR INFLUENT	208
6	RAS FLOW TO STRAINER FEED	42
△C 7	RAS FLOW (SEE NOTE 2)	417
8	IMLR FLOW	833
9	ML FLOW (SEE NOTE 2)	620
10	NET MBR FILTRATE (SEE NOTE 2)	203
11	PWF FEED FLOW	148 – 168
12	MURRAY TRAIN OZONE CONTACTOR INFLUENT	148
13	MURRAY TRAIN BAC FILTERS INFLUENT	143
14	MURRAY TRAIN MF SYSTEM INFLUENT	127
15	BAC BACKWASH SUPPLY	215 – 365
16	MF BACKWASH SUPPLY	90
17	MURRAY TRAIN 3–STAGE RO SYSTEM INFLUENT	18.2 – 20.4
18	MURRAY TRAIN CCRO SYSTEM INFLUENT	10.5
19	MURRAY TRAIN FRRO SYSTEM INFLUENT	70.6
20	PFC CARRIER WATER TO MBR	1
21	PFC CARRIER WATER TO MURRAY TRAIN	1
22	PFC CARRIER WATER TO SAN VICENTE TRAIN	1
23	RO PERMEATE TO CIP TANKS	50
24	MURRAY TRAIN UV AOP	15
25	SAN VICENTE TRAIN 3–STAGE RO SYSTEM INFLUENT	18.2 – 20.4
26	SAN VICENTE TRAIN UV AOP	15

MAJOR WASTE FLOW

FLOW #	DESCRIPTION	FREQUENCY/INTERVAL	QUANTITY/DURATION
A	PRIMARY EFFLUENT BYPASS	CONTINUOUS	0 – 80 GPM
B	PRIMARY INFLUENT BYPASS	CONTINUOUS	0 – 70 GPM
C	PRIMARY INFLUENT STRAINER BACKWASH WASTE	PERIODIC/AS NEEDED	8 – 12 GPM
D	BNR STRAINER BACKWASH WASTE	PERIODIC/AS NEEDED	15 – 20 GPM
E	WAS FLOW	PERIODIC/HOURLY	32.4 GPM/5.9–10.2 MIN
F	BAC BACKWASH WASTE	PERIODIC/WEEKLY	4,600 GAL PER FILTER/15 MIN
G	WASTE PRIOR TO MF SYSTEM INFLUENT	CONTINUOUS	15
H	MF STRAINER BACKWASH WASTE	PERIODIC/HOURLY	6.6 GAL PER STRAINER/16 SEC
I	MF SYSTEM BACKWASH	PERIODIC/93 MINS	50 GAL PER TRAIN/30 SEC
J	MF SYSTEM MC	PERIODIC/56 HRS	79 GAL PER TRAIN/27 MIN
K	MF SYSTEM CIP	PERIODIC/30 DAYS	35 GAL PER CIP/TBD
L	WASTE PRIOR TO RO SYSTEM INFLUENT	CONTINUOUS	25.5 – 27.7 GPM
M	MURRAY TRAIN 3–STAGE RO SYSTEM BRINE	CONTINUOUS	0.9 – 3.1 GPM
N	MURRAY TRAIN CCRO SYSTEM BRINE	PERIODIC/30 MINS	35 GPM
O	MURRAY TRAIN FRRO SYSTEM BRINE	CONTINUOUS	3.5 GPM
P	MURRAY TRAIN 3–STAGE RO SYSTEM FLUSH WASTE	PERIODIC/RO FLUSH	100 GAL/5 MIN
Q	MURRAY TRAIN CCRO SYSTEM FLUSH WASTE	PERIODIC/RO FLUSH	40 GAL/5MIN
R	MURRAY TRAIN FRRO SYSTEM FLUSH WASTE	PERIODIC/RO FLUSH	350 GAL/5 MIN
S	MURRAY TRAIN UV AOP EFFLUENT	CONTINUOUS	15 GPM
T	SAN VICENTE TRAIN 3–STAGE RO SYSTEM BRINE	CONTINUOUS	0.9 – 3.1 GPM
U	SAN VICENTE TRAIN 3–STAGE RO SYSTEM FLUSH WASTE	PERIODIC/RO FLUSH	100 GAL/5 MIN
V	RO CIP WASTE	PERIODIC/MONTHLY	40 – 350 GAL PER SYSTEM PER CIP
W	SAN VICENTE TRAIN UV AOP EFFLUENT	CONTINUOUS	15 GPM
X	RO FLUSH TANK OVERFLOW	CONTINUOUS	91 GPM
Y	MBR FILTRATE TANK OVERFLOW	CONTINUOUS	33 GPM
Z	WASTE PRIOR TO BAC INFLUENT	CONTINUOUS	5 GPM

PROCESS FLOW DIAGRAM 2

G-10

CENTRAL AREA SMALL-SCALE FACILITY
GENERAL

PROCESS FLOW DIAGRAM 2

CITY OF SAN DIEGO, CALIFORNIA
ENGINEERING AND CAPITAL PROJECTS DEPARTMENT
SHEET 10 OF 264 SHEETS

WBS B–21151

CONSULTANT: Stantec, Brown AND Caldwell, Trussell TECHNOLOGIES INC

REGISTERED PROFESSIONAL ENGINEER — MECHANICAL — NO. M34495 — STATE OF CALIFORNIA — 12/27/22

APPROVED: FOR CITY ENGINEER — 10/13/2022 DATE
ALICE ALTES — PRINT DCE NAME — C68286 RCE#

SUBMITTED BY: JOSEPH QUICHO, PROJECT MANAGER
CHECKED BY: MICHAEL VIOLANTE, PROJECT ENGINEER

DESCRIPTION	BY	APPROVED	DATE	FILMED
ORIGINAL	BC		10/22	
△C ADDENDUM C	BC		12/22	

CCS27 COORDINATE
CCS83 COORDINATE
DRAWING NO. 0100179-10-D B09

CONTRACTOR
INSPECTOR
NTP DATE
NOC DATE

△C ADDED GENERAL NOTE 2 AND REVISED BNR/MBR FLOWRATES TO ALIGN WITH TESTING CONDITION CEPT WITH CARBON ADDITION.

ADDENDUM C

FILENAME: CASSF-G-10.DWG

December 29, 2022
Pure Water Program (PWP) Central Area Small Scale Facility

DESIGN CRITERIA - PROCESS 1

PRIMARY EFFLUENT PUMP STATION		
DESCRIPTION	UNITS	DESIGN
NUMBER OF PUMPS	NO.	1 (1 DUTY, 0 STANDBY)
TYPE	-	HORIZONTAL SELF-PRIMING CENTRIFUGAL
RATED CAPACITY, EACH	GPM	208
RATED HEAD	FT	90
MOTOR SIZE	HP	10
DRIVE	-	CONSTANT SPEED

PRIMARY INFLUENT PUMP STATION		
DESCRIPTION	UNITS	DESIGN
PRIMARY INFLUENT PUMP		
NUMBER OF PUMPS	NO.	1 (1 DUTY, 0 STANDBY)
TYPE	-	HORIZONTAL SELF-PRIMING CENTRIFUGAL
RATED CAPACITY, EACH	GPM	80
RATED HEAD	FT	95
MOTOR SIZE	HP	8
DRIVE	-	CONSTANT SPEED
GRINDER		
QUANTITY OF GRINDER	NO.	1(1 DUTY, NO STANDBY)
TYPE	-	COMPACT TWIN SHAFT GRINDER
CUTTER PROFILE	IN	5/16
MAJOR MATERIALS OF CONSTRUCTION	-	DUCTILE IRON HOUSING WITH 4140 HEAT TREATED ALLOY STEEL CUTTER
MOTOR SIZE	HP	3
STRAINER		
QUANTITY OF SCREENS	NO.	1 (1 DUTY, NO STANDBY)
TYPE	-	AUTOMATIC STRAINER
PERFORATION SIZE (CIRCULAR OPENING)	MM	3
CAPACITY	GPM	80
DESIGN HEADLOSS ACROSS THE SCREENS	IN OF WC	0.75
MAJOR MATERIALS OF CONSTRUCTION	-	CAST IRON OR FABRICATED BODY WITH SS316 STRAINER ELEMENT
MOTOR SIZE	HP	0.25

BLENDING TANK		
DESCRIPTION	UNITS	DESIGN
BLENDING TANK		
NUMBER OF TANKS	NO.	1 (1 DUTY, NO STANDBY)
HYDRAULIC RETENTION TIME	MIN	30
TANK VOLUME	GAL	6,240
MIXING PUMP		
NUMBER OF PUMPS	NO.	1 (1 DUTY, NO STANDBY)
TYPE	-	HORIZONTAL CENTRIFUGAL
RATED CAPACITY, EACH	GPM	208
RATED HEAD	FT	6
MOTOR SIZE	HP	1.5
DRIVE	-	CONSTANT SPEED

BNR SYSTEM		
DESCRIPTION	UNITS	DESIGN
BNR FEED PUMP		
NUMBER OF PUMPS	NO.	1 (1 DUTY, 0 STANDBY)
TYPE	-	HORIZONTAL CENTRIFUGAL
RATED CAPACITY, EACH	GPM	208
RATED HEAD	FT	48
MOTOR SIZE	HP	5
DRIVE	-	VFD

BNR SYSTEM CONT.		
DESCRIPTION	UNITS	DESIGN
STRAINER		
QUANTITY OF SCREENS	NO.	2 (1 DUTY, 1 STANDBY)
TYPE	-	AUTOMATIC STRAINER
PERFORATION SIZE (CIRCULAR OPENING)	MM	2
CAPACITY	GPM	250
ADDITIONAL RAS FLOW	GPM	42
DESIGN HEADLOSS ACROSS THE SCREENS	IN OF WC	10
MAJOR MATERIALS OF CONSTRUCTION	-	CAST IRON OR FABRICATED BODY WITH SS316 STRAINER ELEMENT
MOTOR SIZE	HP	0.25
BNR SYSTEM		
BPE FEED FLOW	GPM	250
BOD LOADING, AVERAGE ANNUAL	LB/D	483
BOD LOADING, MAXIMUM MONTH	LB/D	535
TSS LOADING, AVERAGE ANNUAL	LB/D	333
TSS LOADING, MAXIMUM MONTH	LB/D	375
TKN LOADING, AVERAGE ANNUAL	LB/D AS N	165
TKN LOADING, MAXIMUM MONTH	LB/D AS N	187
TOTAL SOLIDS RETENTION TIME	DAYS	10
WASTE SLUDGE LOCATION, NORMAL OPERATION	-	INTERMITTENT SURFACE WASTING; FROM AERATION ZONE 2
WASTE SLUDGE FLOW	GPM	32

DEOXYGENATION TANK		
DESCRIPTION	UNITS	DESIGN
DEOXYGENATION TANK		
NUMBER OF TANKS / ZONES PER TANK	NO.	1 / 1
TANK VOLUME, EACH	GAL	7,500
MLSS	MG/L	10,000
HYDRAULIC RETENTION TIME	MIN	32 - 35

ANOXIC TANK		
DESCRIPTION	UNITS	DESIGN
ANOXIC TANKS		
NUMBER OF TANKS / ZONES PER TANK	NO.	1 / 2
PRIMARY EFFLUENT FLOW, EACH	GPM	208 - 250
TANK VOLUME, TOTAL	GAL	21,700
MLSS	MG/L	6,000
HYDRAULIC RETENTION TIME	MIN	94 - 104
ANOXIC MIXERS		
MIXER TYPE	-	TOP ENTERING
NUMBER OF MIXERS, PER TANK	NO.	2
MIXER POWER, PER TANK	HP	2.5

AERATION AEROBIC TANK		
DESCRIPTION	UNITS	DESIGN
AEROBIC TANK		
NUMBER OF TANKS / ZONES PER TANK	NO.	1 / 2
TANK VOLUME, EACH	GAL	47,200
MLSS	MG/L	6,000
HYDRAULIC RETENTION TIME	MIN	204 - 226
AIR SYSTEM		
BLOWER TYPE	-	HELICAL SCREW ROTARY POSITIVE DISPLACEMENT
NUMBER OF BLOWERS, TOTAL	NO.	2 (1 DUTY, 1 STANDBY)
BLOWER CAPACITY RANGE	SCFM	110 - 360
BLOWER POWER, EACH	HP	30
DIFFUSER TYPE	-	MEMBRANE DISC
DIFFUSER SIZE, EACH	INCH	9

AERATION AEROBIC TANK CONT.		
DESCRIPTION	UNITS	DESIGN
INTERNAL MIXED LIQUOR PUMPS		
NUMBER OF PUMPS	NO.	1 (1 DUTY, NO STANDBY)
TYPE	-	HORIZONTAL CENTRIFUGAL
RATED CAPACITY, EACH	GPM	833
RATED HEAD	FT	6.6
MOTOR SIZE	HP	7.5
DRIVE	-	VFD
MIXED LIQUOR PUMPS		
NUMBER OF PUMPS	NO.	1 (1 DUTY, NO STANDBY)
TYPE	-	ROTARY LOBE
RATED CAPACITY, EACH	GPM	1,040
RATED HEAD	FT	13.8
MOTOR SIZE	HP	10
DRIVE	-	0

MBR SYSTEM		
DESCRIPTION	UNITS	DESIGN
MEMBRANE SYSTEM		
NUMBER OF BASINS	NO.	1 (1 DUTY, NO STANDBY)
MEMBRANE TYPE	-	HOLLOW FIBER
TARGET MAXIMUM FLUX	GFD	14.7
MODULES PER BASIN	NO.	44-48 (VARIES BY VENDOR)
FILTRATE PUMPS		
NUMBER OF PUMPS	NO.	1 (1 DUTY, NO STANDBY)
TYPE	-	ROTARY LOBE
RATED CAPACITY, EACH	GPM	216
RATED HEAD	FT	36.9
MOTOR SIZE	HP	10
DRIVE	-	VFD
AIR SCOUR BLOWERS		
NUMBER OF BLOWERS	NO.	1 (1 DUTY, NO STANDBY)
TYPE	-	POSITIVE DISPLACEMENT
CAPACITY, EACH	SCFM	215
RATED PRESSURE	PSIG	8
MOTOR SIZE	HP	15
DRIVE	-	CONSTANT SPEED
COMPRESSED AIR SYSTEM		
NUMBER OF COMPRESSORS	NO.	1 (1 DUTY, NO STANDBY)
TYPE	-	ROTARY SCREW
CAPACITY, EACH	SCFM	82
RATED PRESSURE	PSIG	140
MOTOR SIZE	HP	20
RAS PUMPS		
NUMBER OF PUMPS	NO.	1 (1 DUTY, NO STANDBY)
TYPE	-	CENTRIFUGAL
RATED CAPACITY, EACH	GPM	832
RATED HEAD	FT	15
MOTOR SIZE	HP	7.5
DRIVE	-	VFD

MBR PATHOGEN TESTING SKID		
DESCRIPTION	UNITS	DESIGN
PATHOGEN TESTING TANK(S)	NO.	2
NUMBER OF TANKS	-	HDPE
TANK MATERIAL	GAL	3,500 AND 1,000
PATHOGEN TESTING PUMP(S)		
NUMBER OF PUMPS	NO.	2 (2 DUTY, NO STANDBY)
TYPE	-	HORIZONTAL CENTRIFUGAL
RATED CAPACITY		
PATHOGEN PUMP 1	GPM	2.75
PATHOGEN PUMP 2	GPM	0.55
RATED HEAD		
PATHOGEN PUMP 1	FT	150
PATHOGEN PUMP 2	FT	33
MOTOR SIZE		
PATHOGEN PUMP 1	HP	0.75
PATHOGEN PUMP 2	HP	0.08
DRIVE	-	CONSTANT SPEED

MBR FILTRATE TANK(S) AND PIPE LOOP		
DESCRIPTION	UNITS	DESIGN
MBR FILTRATE TANK(S)		
NUMBER OF TANKS	NO.	2 (2 DUTY, NO STANDBY)
TANK VOLUME, EACH	GAL	12,000
TANK VOLUME, TOTAL	GAL	24,000
HYDRAULIC RETENTION TIME, MIN	MIN	142
PIPE LOOP		
PIPE DIAMETER	INCHES	4
PIPE LENGTH (TOTAL)	FT	2,250
HYDRAULIC RETENTION TIME, PIPE LOOP	MIN	9
HYDRAULIC RETENTION TIME, TOTAL	MIN	151

PWF FEED PUMP		
DESCRIPTION	UNITS	DESIGN
NUMBER OF PUMPS	NO.	1 (1 DUTY, NO STANDBY)
TYPE	-	ROTARY LOBE
RATED CAPACITY, EACH	GPM	186
RATED HEAD	FT	95
MOTOR SIZE	HP	10
DRIVE	-	VFD

G-11

CENTRAL AREA SMALL-SCALE FACILITY
GENERAL

DESIGN CRITERIA - PROCESS 1

CITY OF SAN DIEGO, CALIFORNIA
ENGINEERING AND CAPITAL PROJECTS DEPARTMENT
SHEET 11 OF 264 SHEETS

WBS B-21151

CONSULTANT

Stantec
Brown AND Caldwell
Trussell TECHNOLOGIES INC

REGISTERED PROFESSIONAL ENGINEER
BRIAN K. JAYNES
NO. M34495
MECHANICAL
STATE OF CALIFORNIA
12/27/22

APPROVED: 10/13/2022
FOR CITY ENGINEER — DATE
ALICE ALTES — C68286
PRINT DCE NAME — RCE#

SUBMITTED BY: JOSEPH QUICHO, PROJECT MANAGER
CHECKED BY: MICHAEL VIOLANTE, PROJECT ENGINEER

DESCRIPTION	BY	APPROVED	DATE	FILMED
ORIGINAL	BC		10/22	
A ADDENDUM B	BC		12/22	
C ADDENDUM C	BC		12/22	

CCS27 COORDINATE
CCS83 COORDINATE
DRAWING NO. 0100179-11-D
B10

CONTRACTOR
INSPECTOR
NTP DATE
NOC DATE

FILENAME: CASSF-G-11-13.DWG

C REVISED FILTRATE PUMP CAPACITY
A REVISED CAPACITY OF ML PUMP AND HEAD OF PWF FEED PUMP

ADDENDUM C

DESIGN CRITERIA - CHEMICAL 2

CHEMICAL FACILITIES – ANTISCALANT		
DESCRIPTION	UNITS	DESIGN
CHEMICAL		
CHEMICAL	–	ANTISCALANT (AWC A–110)
CHEMICAL CONCENTRATION	%	100 (WT)
HAZARD CLASSIFICATION	–	TOXIC, CORROSIVE
CHEMICAL BULK STORAGE		
TYPE	–	DRUM
QUANTITY	–	1
MATERIAL	–	HMWPE
CAPACITY	GAL	55
ANTISCALANT MURRAY TRAIN 3–STAGE RO FEED PUMPS		
DOSING LOCATION	–	RO SYSTEM – MURRAY TRAIN 3–STAGE
TYPE	–	DIAPHRAGM
DRIVE	–	VARIABLE SPEED (INTEGRAL TO PUMP)
NUMBER OF PUMPS	–	1 (1 DUTY, 0 STANDBY)
PUMP CAPACITY, EACH	GPH	0.0001 – 0.003
ANTISCALANT MURRAY TRAIN CCRO FEED PUMPS		
DOSING LOCATION	–	RO SYSTEM – MURRAY TRAIN CCRO
TYPE	–	DIAPHRAGM
DRIVE	–	VARIABLE SPEED (INTEGRAL TO PUMP)
NUMBER OF PUMPS	–	1 (1 DUTY, 0 STANDBY)
PUMP CAPACITY, EACH	GPH	0 – 0.002
ANTISCALANT MURRAY TRAIN FFRO FEED PUMPS		
DOSING LOCATION	–	RO SYSTEM – MURRAY TRAIN FRRO
TYPE	–	DIAPHRAGM
DRIVE	–	VARIABLE SPEED (INTEGRAL TO PUMP)
NUMBER OF PUMPS	–	1 (1 DUTY, 0 STANDBY)
PUMP CAPACITY, EACH	GPH	0.0003 – 0.011
ANTISCALANT SAN VICENTE TRAIN 3–STAGE RO FEED PUMPS		
DOSING LOCATION	–	RO SYSTEM – SAN VICENTE TRAIN 3–STAGE
TYPE	–	DIAPHRAGM
DRIVE	–	VARIABLE SPEED (INTEGRAL TO PUMP)
NUMBER OF PUMPS	–	1 (1 DUTY, 0 STANDBY)
PUMP CAPACITY, EACH	GPH	0.0001 – 0.003

CHEMICAL FACILITIES – SULFURIC ACID		
DESCRIPTION	UNITS	DESIGN
CHEMICAL		
CHEMICAL	–	SULFURIC ACID (H2SO4)
CHEMICAL CONCENTRATION	%	93 (WT)
HAZARD CLASSIFICATION	–	COR, TOX, WR2
CHEMICAL BULK STORAGE		
TYPE	–	TANK
QUANTITY	–	1
MATERIAL	–	XLPE
CAPACITY	GAL	405
SULFURIC ACID MURRAY TRAIN 3–STAGE RO FEED PUMPS		
DOSING LOCATION	–	RO SYSTEM – MURRAY TRAIN 3–STAGE
TYPE	–	DIAPHRAGM
DRIVE	–	VARIABLE SPEED (INTEGRAL TO PUMP)
NUMBER OF PUMPS	–	1 (1 DUTY, 0 STANDBY)
PUMP CAPACITY, EACH	GPH	0.005 – 0.08
SULFURIC ACID MURRAY TRAIN CCRO FEED PUMPS		
DOSING LOCATION	–	RO SYSTEM – MURRAY TRAIN CCRO
TYPE	–	DIAPHRAGM
DRIVE	–	VARIABLE SPEED (INTEGRAL TO PUMP)
NUMBER OF PUMPS	–	1 (1 DUTY, 0 STANDBY)
PUMP CAPACITY, EACH	GPH	0.002 – 0.04

CHEMICAL FACILITIES – SULFURIC ACID CONT.		
DESCRIPTION	UNITS	DESIGN
SULFURIC ACID MURRAY TRAIN FFRO FEED PUMPS		
DOSING LOCATION	–	RO SYSTEM – MURRAY TRAIN FRRO
TYPE	–	DIAPHRAGM
DRIVE	–	VARIABLE SPEED (INTEGRAL TO PUMP)
NUMBER OF PUMPS	–	1 (1 DUTY, 0 STANDBY)
PUMP CAPACITY, EACH	GPH	0.016 – 0.27
SULFURIC ACID SAN VICENTE TRAIN 3–STAGE RO FEED PUMPS		
DOSING LOCATION	–	RO SYSTEM – SAN VICENTE TRAIN 3–STAGE
TYPE	–	DIAPHRAGM
DRIVE	–	VARIABLE SPEED (INTEGRAL TO PUMP)
NUMBER OF PUMPS	–	1 (1 DUTY, 0 STANDBY)
PUMP CAPACITY, EACH	GPH	0.005 – 0.08

CHEMICAL FACILITIES – AMMONIUM SULFATE		
DESCRIPTION	UNITS	DESIGN
CHEMICAL		
CHEMICAL	–	AMMONIUM SULFATE ((NH4)2SO4)
CHEMICAL CONCENTRATION	%	40 (WT)
HAZARD CLASSIFICATION	–	IRR
CHEMICAL BULK STORAGE		
TYPE	–	TANK
QUANTITY	–	1
MATERIAL	–	XLPE
CAPACITY	GAL	160
AMMONIUM SULFATE PFC–MBR FILTRATE, MURRAY TRAIN MF, SV TRAIN FEED PUMPS		
DOSING LOCATION	–	PFC CARRIER WATER TO MBR FILTRATE TANK, MURRAY MF FEED, SV RO FEED
TYPE	–	PERISTALTIC
DRIVE	–	VARIABLE SPEED (INTEGRAL TO PUMP)
NUMBER OF PUMPS	–	4 (3 DUTY, 1 STANDBY)
PUMP CAPACITY, EACH	GPH	0.0026 – 0.21
AMMONIUM SULFATE MURRAY MF UV/AOP & SV TRAIN UV/AOP FEED PUMP		
DOSING LOCATION	–	MURRAY TRAIN – UV/AOP & SV TRAIN UV/AOP FEED PUMP
TYPE	–	PERISTALTIC
DRIVE	–	VARIABLE SPEED (INTEGRAL TO PUMP)
NUMBER OF PUMPS	–	1 (1 DUTY, 0 STANDBY) 6
PUMP CAPACITY, EACH	GPH	0.0019 – 0.013

CHEMICAL FACILITIES – SODIUM BISULFITE		
DESCRIPTION	UNITS	DESIGN
CHEMICAL		
CHEMICAL	–	SODIUM BISULFITE (NAHSO3)
CHEMICAL CONCENTRATION	%	38 (WT)
HAZARD CLASSIFICATION	–	CORROSIVE
CHEMICAL BULK STORAGE		
TYPE	–	Tank
QUANTITY	–	1
MATERIAL	–	XLPE
CAPACITY, EACH	GAL	105
SODIUM BISULFITE MURRAY TRAIN OZONE INFLUENT RESIDUAL QUENCHING & OZONE EFFLUENT DECHLORINATION FEED PUMPS		
DOSING LOCATION	–	MURRAY TRAIN – OZONE CONTACTOR
TYPE	–	PERISTALTIC
DRIVE	–	VARIABLE SPEED (INTEGRAL TO PUMP)
NUMBER OF PUMPS	–	2 (1 DUTY, 1 STANDBY)
PUMP CAPACITY, EACH	GPH	0.005 – 0.144
SODIUM BISULFITE MURRAY TRAIN MF CLEANING NEUTRALIZATION AND SAN VICENTE TRAIN RO FLUSH NEUTRALIZATION FEED PUMPS		
DOSING LOCATION	–	MURRAY TRAIN – MF CIP TANK AND SAN VICENTE – RO CIP
TYPE	–	PERISTALTIC
DRIVE	–	VARIABLE SPEED (INTEGRAL TO PUMP)
NUMBER OF PUMPS	–	1 (1 DUTY, 0 STANDBY)
PUMP CAPACITY, EACH	GPH	3 – 6

ABBREVIATION	MEANING
COR	–CORROSIVE
OHH	–OTHER HEALTH HAZARD
IRR	–IRRITANT
TOX	–TOXIC
WR	–WATER REACTIVE

G-15

CENTRAL AREA SMALL-SCALE FACILITY
GENERAL

DESIGN CRITERIA - CHEMICAL 2

CITY OF SAN DIEGO, CALIFORNIA
ENGINEERING AND CAPITAL PROJECTS DEPARTMENT
SHEET 15 OF 264 SHEETS

WBS B–21151

CONSULTANT

Stantec
Brown AND Caldwell
Trussell TECHNOLOGIES INC

REGISTERED PROFESSIONAL ENGINEER
SHAR K JAFFER
NO. M34495
MECHANICAL
STATE OF CALIFORNIA
12/27/22

APPROVED: FOR CITY ENGINEER — 10/13/2022 DATE
ALICE ALTES — PRINT DCE NAME — C68286 RCE#

SUBMITTED BY: JOSEPH QUICHO, PROJECT MANAGER
CHECKED BY: MICHAEL VIOLANTE, PROJECT ENGINEER

DESCRIPTION	BY	APPROVED	DATE	FILMED
ORIGINAL			10/22	
6 ADDENDUM C			12/22	

186–1692 CCS27 COORDINATE
1826444–6250407 CCS83 COORDINATE
DRAWING NO. 0100179-15-D B14

CONTRACTOR ____ NTP DATE ____
INSPECTOR ____ NOC DATE ____

6 REVISED NUMBER OF AMMONIUM SULFATE DOSING PUMPS

ADDENDUM C

FILENAME: CASSF-G-14 & 15.DWG

December 29, 2022
Pure Water Program (PWP) Central Area Small Scale Facility

GENERAL

1. THE CONTRACTOR SHALL VERIFY ALL DIMENSIONS, ELEVATIONS AND CONDITIONS AT THE JOB SITE BEFORE STARTING WORK, AND SHALL NOTIFY THE ENGINEER IMMEDIATELY OF ANY DISCREPANCIES.
2. ALL OMISSIONS OR CONFLICTS BETWEEN THE VARIOUS ELEMENTS OF THE WORKING DRAWINGS AND SPECIFICATIONS SHALL BE BROUGHT TO THE ATTENTION OF THE ENGINEER BEFORE PROCEEDING WITH ANY WORK SO INVOLVED.
3. NOTES AND DETAILS ON THE DRAWINGS SHALL TAKE PRECEDENCE OVER GENERAL NOTES, TYPICAL DETAILS AND SPECIFICATIONS IN CASE OF CONFLICT.
4. IN NO CASE SHALL WORKING DIMENSIONS BE SCALED FROM PLANS, SECTIONS OR DETAILS ON THESE STRUCTURAL DRAWINGS.
5. ALL DESIGN, MATERIALS AND WORKMANSHIP SHALL BE IN ACCORDANCE WITH LOCAL STANDARDS AND THE APPLICABLE PROVISIONS OF THE 2019 CALIFORNIA BUILDING CODE (CBC) AS AMENDED BY THE CITY OF SAN DIEGO.
6. WHERE NO CONSTRUCTION DETAILS ARE SHOWN OR NOTED FOR ANY PART OF THE WORK, SUCH DETAILS SHALL BE THE SAME AS FOR SIMILAR WORK SHOWN ON THE DRAWINGS. MEMBER SIZES ARE GENERALLY FOUND ON PLANS. DETAILS AND SECTIONS GENERALLY REFER TO GENERIC ELEMENTS.
7. THE CONTRACTOR IS RESPONSIBLE FOR COORDINATION OF DETAILS FOR AVOIDING THE INTERFERENCE OF MATERIALS TO BE EMBEDDED IN CONCRETE.
8. ELEVATIONS GIVEN ON THE STRUCTURAL DRAWINGS ARE REFERENCED FROM MEAN SEA LEVEL.

DESIGN CRITERIA

1. LIVE LOADS:

   SLABS/FOUNDATIONS 100 PSF

2. WIND DESIGN DATA:

   BASIC DESIGN WIND SPEED
   V (3 SECOND GUST) = 105 MPH
   (CBC 1609.3, FIGURES 1609.3 (1) THRU (8))
   RISK CATEGORY = III (CBC TABLE 1604.5)
   WIND EXPOSURE CATEGORY = D (CBC 1609.4)
   INTERNAL PRESSURE COEFFICIENT Gcpi = ±0.18 (ASCE TABLE 26.13-1)
   WIND DIRECTIONALITY FACTOR Kd = VARIES (ASCE TABLE 26.6-1)
   TOPOGRAPHIC FACTOR Kzt = 1.0 (ASCE 26.8)
   GUST EFFECT FACTOR G = 0.85 (ASCE 26.11)
   ENCLOSURE CLASSIFICATION = VARIES

3. SEISMIC DESIGN DATA:

   RISK CATEGORY = III (CBC TABLE 1604.5)
   SEISMIC IMPORTANCE FACTOR = Ie = 1.25 (ASCE 11.5.1)
   SITE CLASS = C (ASCE 20.3)
   MAPPED SPECTRAL RESPONSE ACCELERATION PARAMETERS (ASCE 11.4.2)
   S_s = 1.228g
   S_1 = 0.423g
   DESIGN SPECTRAL RESPONSE ACCELERATION PARAMETERS (ASCE 11.4.5)
   S_{DS} = 0.982g
   S_{D1} = 0.423g (SEE ASCE 11.4.8)
   SITE COEFFICIENTS
   Fa = 1.200g (ASCE 11.4.4)
   Fv = 1.500g (SEE ASCE TABLE 11.4.8)
   SEISMIC DESIGN CATEGORY D (ASCE 11.6)

4. RETAINING WALLS:

   ACTIVE SOIL PRESSURE (LEVEL) 35 PCF
   ACTIVE SOIL PRESSURE (2:1) 55 PCF
   SEISMIC INVERTED TRIANGULAR DISTRIBUTION

CONCRETE

1. ALL CONCRETE SHALL BE NORMAL WEIGHT, 150 PCF U.O.N. USE 1-INCH NOMINAL AGGREGATE WITH WATER/CEMENT RATIO NOT TO EXCEED 0.40.
2. CONCRETE STRENGTHS:

ITEM OF CONSTRUCTION	STRENGTH (PSI)	SLUMP (INCHES) MAX
FOUNDATIONS AND RETAINING WALLS	4,000	4
SLAB ON GRADE	4,000	3 1/2
CIDH PILES	5,000	4
ELEVATED SLAB AT AREAS 7/8	5,000	4
ALL OTHERS	4,000	4

3. CONCRETE PROTECTION FOR REINFORCEMENT. THE FOLLOWING MINIMUM CONCRETE COVER SHALL BE PROVIDED FOR REINFORCEMENT:

	MIN COVER (INCHES)
A. CONCRETE CAST AGAINST AND PERMANENTLY EXPOSED TO EARTH:	3
B. CONCRETE EXPOSED TO EARTH OR WEATHER:	
NO 6 THROUGH NO 18 BAR	2
NO 5 BAR AND SMALLER	1 1/2
C. CONCRETE NOT EXPOSED TO WEATHER OR IN CONTACT WITH GROUND:	
SLABS, WALLS	
NO 14 AND NO 18 BAR	1 1/2
NO 11 BAR, AND SMALLER	3/4
BEAMS, COLUMNS PRIMARY REINFORCEMENT, TIES, STIRRUPS, SPIRALS	1 1/2

4. ANCHOR BOLTS AND DOWELS: SECURELY HELD IN PLACE PRIOR TO PLACING CONCRETE.
5. CHAMFER: 3/4" ON ALL EXPOSED CORNERS.
6. THE CONCRETE SLAB/FOUNDATION THICKNESS SHALL BE MAINTAINED UNLESS OTHERWISE SHOWN.
7. CEMENT SHALL BE ASTM C150 TYPE II OR TYPE V. USE TYPE V CEMENT AND CONCRETE COMPLYING WITH ACI 318 SECTION 19.3.2 WHEN CONCRETE IS EXPOSED TO SOILS CONTAINING SULFATES.
8. CONTRACTOR SHALL SUBMIT CONCRETE MIX DESIGNS TO THE SEOR FOR REVIEW PRIOR TO CASTING CONCRETE.
9. WHERE CONTINUOUS BARS ARE CALLED OUT, PROVIDE TIED CONTACT SPLICES AS REQUIRED. STAGGER SPLICES OF ALTERNATE BARS BY THE FULL SPLICE LENGTH.
10. ALL CONSTRUCTION JOINTS SHALL BE RAISED TO MINIMUM 1/4" AMPLITUDE. ALL LAITANCE SHALL BE REMOVED PRIOR TO CASTING OVER THE CONSTRUCTION JOINT AND CONCRETE SURFACES SHALL BE MOISTENED TO A SATURATED SURFACE DRY CONDITION.
11. LOCATION OF ALL CONSTRUCTION AND CONTROL JOINTS NOT SPECIFICALLY SHOWN ON THE DRAWINGS SHALL BE REVIEWED BY THE SEOR PRIOR TO PLACING REBAR.

REINFORCING STEEL

1. REINFORCING STEEL SHALL CONFORM TO THE REQUIREMENTS OF ASTM A615 GRADE 60.
2. ALL BARS SHALL BE DEFORMED BARS UON.
3. VERTICAL REINFORCEMENT SHALL BE DOWELED TO THE SUPPORTING MEMBERS WITH THE SAME SIZE AND SPACING OF REINFORCEMENT AS CALLED FOR IN THE DRAWINGS OR STANDARD NOTES. DOWEL SHALL BE FULLY DEVELOPED INTO SUPPORTING MEMBERS U.O.N.
4. WELDING OF REINFORCEMENT IS NOT PERMITTED UNLESS SPECIFICALLY APPROVED BY SEOR.

REINFORCING STEEL (CONTINUED)

4. WELDING OF REINFORCEMENT IS NOT PERMITTED UNLESS SPECIFICALLY APPROVED BY SEOR.
5. SPACER TIES: FURNISH #3 TIES AT 24" OC IN ALL BEAMS AND FOOTINGS, UNLESS OTHERWISE SHOWN IN DETAILS.

CAST-IN-PLACE ANCHOR BOLTS

1. ANCHOR BOLTS FOR CONCRETE SHALL BE STAINLESS STEEL HEAVY HEX HEADED AND COMPLY WITH ASTM 193, B8, CLASS 2, UON.
2. THE EMBEDDED END SHALL BE HEADED OR THE EQUIVALENT SIZE. BENT SO CALLED "J" BOLTS ARE NOT PERMITTED.
3. WHERE PERMISSION TO USE HEADLESS ANCHOR BOLTS IS REQUESTED AND PERMITTED BY THE SEOR, A STANDARD HEXNUT COMPLYING WITH ASTM A563 MAY BE USED. THE HEXNUT SHALL BE HELD IN PLACE BY JAMB NUT OR TACK WELDING.
4. WHERE BOLTS AND HARDWARE, NUTS AND WASHERS ARE SPECIFIED TO BE GALVANIZED, GALVANIZING SHALL COMPLY WITH ASTM A153 WITH THE COATING THICKNESS PER TABLE 1.
5. SEE TYPICAL DETAILS FOR MEASUREMENT OF EMBEDMENT DEPTH.
6. MINIMUM BOLT EMBEDMENT SHALL BE 10 INCHES UON.
7. CONTRACTOR IS RESPONSIBLE TO PROVIDE ANCHOR BOLTS WITH ENOUGH THREAD PROJECTION AS REQUIRED TO ACCOUNT FOR HOUSEKEEPING PAD THICKNESS, GROUT, AND MATERIAL BASE PLATE OR SKID THICKNESS.
8. CAST-IN-PLACE ANCHOR BOLTS FOR EQUIPMENT, TANKS, SKIDS, ETC. WITH LIMITED ADJUSTABILITY SHALL BE INSTALLED AND HELD IN PLACE WITH BOLT TEMPLATES CONSTRUCTED OF RIGID MATERIAL PRIOR TO PLACING CONCRETE.

FOUNDATIONS

THE FOUNDATION DESIGN IS BASED ON THE RECOMMENDATIONS CONTAINED IN THE REPORT OF GEOTECHNICAL INVESTIGATION, POINT LOMA WASTE WATER TREATMENT PLANT, CENTRAL AREA SMALL SCALE FACILITY, CITY OF SAN DIEGO AND DATED MARCH 7, 2022 PREPARED BY ALLIED GEOTECHNICAL ENGINEERS, INC. REFER TO THIS REPORT FOR ALL GEOTECHNICAL REQUIREMENTS, SOIL (C) PREPARATION AND ANTICIPATED CONDITIONS BELOW GRADE.

COLUMN DOWELS SHALL BE INSTALLED WITH A TEMPLATE TO HOLD BARS IN THE PROPER POSITION AND SHALL BE PLACED WITH A TOLERANCE OF +/-1/4 INCH.

SPREAD FOOTINGS: DESIGN SOIL BEARING PRESSURE = 3,000 PSF. ALL FOOTINGS SHALL BEAR ON SUITABLE UNDISTURBED SOIL AND/OR PREPARED BASE MATERIALS APPROVED BY THE GEOTECHNICAL ENGINEER. WHERE SUITABLE UNDISTURBED SOILS ARE NOT FOUND AT THE SPECIFIED FOOTING ELEVATION, OVER-EXCAVATE TO THE DEPTHS REQUIRED BY THE GEOTECHNICAL ENGINEER AND REPLACE MATERIALS WITH STRUCTURAL FILL, LEAN CONCRETE, OR PROVIDE OTHER PREPARATION AS DIRECTED BY THE GEOTECHNICAL ENGINEER TO ACHIEVE THE REQUIRED BEARING CAPACITY.

CAST-IN-DRILLED HOLE (CIDH): CONCRETE CIDH PILES SHALL BE 36-INCH DIAMETER CONCRETE PILES. PILE BEARING CAPACITIES SHALL BE 564 KIPS AS NOTED IN THE SOILS REPORT. ESTIMATED PILE TIP ELEVATIONS ARE 72 FEET MSL. REINFORCING SHALL BE ASTM A615, GRADE 60. SPACERS FOR REINFORCING BARS SHALL BE PROVIDED TO ENSURE CLEARANCES SHOWN ON THE STRUCTURAL DRAWINGS. TOLERANCES FOR AUGER POSITION SHALL BE PER THE PROJECT SPECIFICATIONS. SHAFTS SHALL BE DRILLED PLUMB AND TRUE TO LINE. CONTRACTOR SHALL SUBMIT PILE SHOP DRAWINGS SHOWING TOP AND BOTTOM ELEVATIONS AND REINFORCING TO THE SEOR FOR REVIEW.

FOUNDATIONS (CONTINUED)

A PILE INDICATOR AND PILE LOAD TEST PROGRAM SHALL BE PERFORMED IN ACCORDANCE WITH THE RECOMMENDATIONS OF THE PROJECT GEOTECHNICAL REPORT. THERE SHALL BE TWO INDICATOR PILES MINIMUM (NOT PRODUCTION PILES) LOCATED IN AREAS 7 & 8. INDICATOR PILES SHALL BE LOCATED SO AS NOT TO INTERFERE WITH THE CAPACITY OR CONSTRUCTION OF PRODUCTION PILES. PILE LOAD TEST PROGRAM SHALL BE IN ACCORDANCE WITH ASTM D1143.

DRILLED IN ANCHORS AND BARS

1. ALL ANCHORS SHALL BE ICC-APPROVED.
2. ALL ANCHORS SHALL BE INSTALLED IN STRICT ACCORDANCE WITH MANUFACTURER'S APPROVED RESEARCH REPORT.
3. DRILLED IN CONCRETE WEDGE ANCHORS SHALL BE:
   HILTI KWIK BOLT TZ2, 304/316 SS ESR-4266
4. DRILLED IN ADHESIVE ANCHORS FOR CONCRETE SHALL BE IN LOCATIONS CALLED OUT ON DRAWINGS:
   HILTI HIT-RE 500 V3, HAS-R
   304/316 SS ESR-3814
   HILTI HIT-HY-200, HAS-R
   304/316 SS ESR-3187
5. ANCHORS BY OTHER MANUFACTURERS MAY BE ACCEPTABLE PROVIDED SIGNED CALCULATIONS ARE PROVIDED BY AN ENGINEER LICENSED IN THE STATE OF CALIFORNIA SHOWING EQUIVALENCY FOR THE PARTICULAR APPLICATION.
6. UNLESS OTHERWISE SHOWN, PROVIDE A MINIMUM OF 6XDIAMETER EDGE DISTANCES AND 12XDIAMETER SPACING OF ANCHORS.
7. FOR EXTERIOR USE DRILLED IN ANCHORS AND THREADED ROD ASSEMBLIES SHALL BE STAINLESS STEEL PER ESR REPORT.
8. DRILLED IN ANCHORS SHALL NOT BE INSTALLED IN CONCRETE THAT HAS NOT REACHED THE SPECIFIED 28-DAY STRENGTH.
9. SPECIAL INSPECTION IN ACCORDANCE WITH TABLE 1705.3 OF THE CBC MUST BE PROVIDED FOR ALL ANCHOR INSTALLATIONS. THE SPECIAL INSPECTOR MUST BE ON THE JOBSITE DURING ANCHOR INSTALLATION TO VERIFY ANCHOR TYPE, ANCHOR DIMENSIONS, CONCRETE TYPE, CONCRETE COMPRESSIVE STRENGTH, HOLE DIMENSIONS, HOLE CLEANING PROCEDURES, ANCHOR SPACING, EDGE DISTANCES, CONCRETE THICKNESS, ANCHOR EMBEDMENT, AND TIGHTENING TORQUE. THE SPECIAL INSPECTOR MUST VERIFY THE INSTALLATIONS OF EACH TYPE AND SIZE OF ADHESIVE ANCHOR BY CONSTRUCTION PERSONNEL ON SITE.

NON-SHRINK GROUT

1. GROUT SHALL BE NON-SHRINK TYPE CONFORMING TO ASTM C1107 WITH A 28-DAY COMPRESSION STRENGTH EQUAL TO 7000 PSI MINIMUM.
2. GROUTING PROCEDURES, INCLUDING PREPARATION, MIXING, PLACING AND CURING, SHALL BE AS RECOMMENDED BY THE MANUFACTURER OF THE GROUT.
3. DATA FOR GROUT SHALL BE SUBMITTED TO SEOR FOR APPROVAL. PRODUCT SHALL BE SPECIFICALLY DESIGNED FOR THE USE AND PROCEDURES PROPOSED.
4. GROUT SHALL NOT CONTAIN METALLIC AGGREGATES AND SHALL BE FREE OF AGENTS THAT PRODUCE OR RELEASE GAS, BE FREE OF OXIDIZING CATALYSTS AND BE FREE OF INORGANIC ACCELERATORS.
5. GROUT SHALL BE FORMED USING WATER-TIGHT FORMS.

ABBREVIATIONS

&	AND
@	AT
AB	ANCHOR BOLT
ABV	ABOVE
ADDL	ADDITIONAL
ALT	ALTERNATE
APPROX	APPROXIMATE
ARCH	ARCHITECT(URAL)
ART	ARTICLE
ATR	ALL-THREAD-ROD
BLDG	BUILDING
BLK	BLOCK(ING)
BLKD	BLOCKED
BLW	BELOW
BM	BEAM
BOF	BOTTOM OF FOOTING
BRG	BEARING
BTM (B)	BOTTOM
BTWN	BETWEEN
CBC	CALIFORNIA BUILDING CODE
CF	CUBIC FEET
CG	CENTER OF GRAVITY
CH	CHAPTER
CIDH	CAST IN DRILLED HOL
CIP	CAST IN PLACE
CJ	CONSTRUCTION JOINT
CJP	COMPLETE JOINT PENETRATION
CL (℄)	CENTER LINE
CLR	CLEAR(ANCE)
CNTR	CENTER(ED)
COL	COLUMN
CONC	CONCRETE
CONN	CONNECT(ION)(OR)
CONST	CONSTRUCT(ION)
CONT	CONTINUOUS
CY	CUBIC YARD(S)
DBL	DOUBLE
DEPT	DEPARTMENT
D_H	DIAMETER OF HOLE
DIA (ø)	DIAMETER
DIAG	DIAGONAL
DWG	DRAWING
DWL	DOWEL
EA	EACH
EF	EACH FACE
EJ	EXPANSION JOINT
EL	ELEVATION
ELEC	ELECTRICAL
EMBED	EMBED(ED)(MENT)
EQ	EQUAL
EQUIP	EQUIPMENT
ES	EACH SIDE
EW	EACH WAY
EXIST (E)	EXISTING
EXP	EXPANSION
EXT	EXTERIOR
FDN	FOUNDATION
FF	FINISHED FLOOR
FIN	FINISH(ED)
FLR	FLOOR
FLNG	FLANGE
FO	FACE OF
FOC	FACE OF CONCRETE
FP	FULL PENETRATION
FRMG	FRAMING
FS	FAR SIDE
FT	FOOT
FTG	FOOTING
FV	FIELD VERIFY
GA	GAUGE (GAGE)
GALV	GALVANIZE(D)
GRD	GRADE
HDG	HOT DIPPED GALVANIZED
HORIZ (H)	HORIZONTAL
HSB	HIGH STRENGTH BOLT
HSS	HOLLOW STRUCTURAL SECTION
HT	HEIGHT
ICC	INTERNATIONAL CODE COUNCIL
ID	INSIDE DIAMETER
IN	INCH(ES)
JT	JOINT
K	KIPS
K-FT	KIP-FEET
L	LONG (LENGTH)
LB	POUND
ld	REINF DEVELOPMENT LENGTH
ldh	HOOKED REINF DEVELOPMENT LENGTH
LLH	LONG LEG HORIZONTAL
LLV	LONG LEG VERTICAL
LONGIT	LONGITUDINAL
MATL	MATERIAL
MAX	MAXIMUM
MB	MACHINE BOLT
MECH	MECHANICAL
MFR	MANUFACTURER
MIN	MINIMUM
MISC	MISCELLANEOUS
MLLW	MEAN LOWER LOW WATER
MPH	MILES PER HOUR
MSL	MEAN SEA LEVEL
MTL	METAL

GENERAL NOTES 1

S-01

CENTRAL AREA SMALL-SCALE FACILITY
STRUCTURAL
GENERAL NOTES 1

CITY OF SAN DIEGO, CALIFORNIA
ENGINEERING AND CAPITAL PROJECTS DEPARTMENT
SHEET 36 OF 264 SHEETS

WBS B-21151

CONSULTANT: Stantec; Brown AND Caldwell; Trussell TECHNOLOGIES INC; MARTIN & LIBBY STRUCTURAL ENGINEERS

REGISTERED PROFESSIONAL ENGINEER JEAN M. LIBBY No. 08412 Exp. 03-31-23 CIVIL STATE OF CALIFORNIA 12/27/22

APPROVED: FOR CITY ENGINEER ALICE ALTES, PRINT DCE NAME; DATE 10/13/2022; RCE# C68286

SUBMITTED BY: JOSEPH QUICHO, PROJECT MANAGER
CHECKED BY: MICHAEL VIOLANTE, PROJECT ENGINEER

DESCRIPTION	BY	APPROVED	DATE	FILMED
ORIGINAL	M&L		10/22	
(C) ADDENDUM C	M&L		12/22	

CCS27 COORDINATE
CCS83 COORDINATE
DRAWING NO. 0100179-36-D S01

CONTRACTOR
INSPECTOR
NTP DATE
NOC DATE

(C) REVISED NOTE.

ADDENDUM C

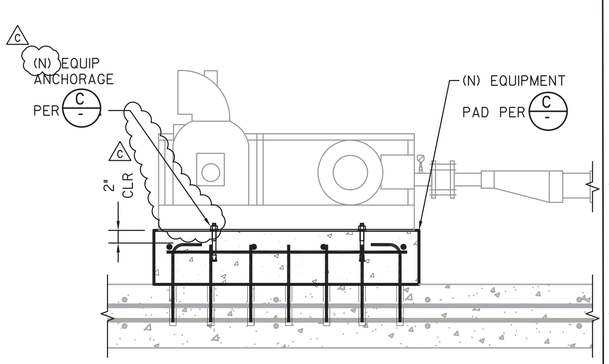

EQUIPMENT I-I PI PUMP (A -)
SCALE: I" = I'-0"

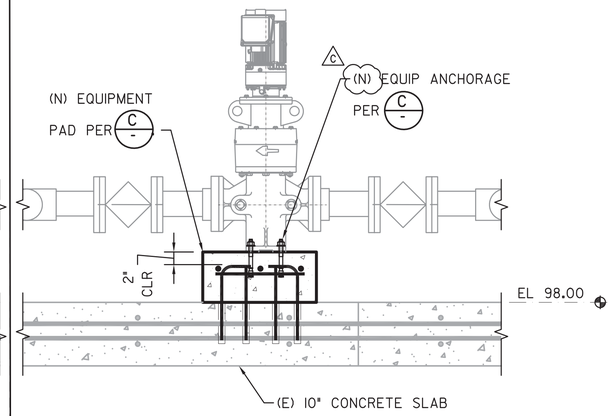

EQUIPMENT I-2 GRINDER (B -)
SCALE: I" = I'-0"

EQUIPMENT ANCHORAGE AND PAD SCHEDULE[1]

EQUIPMENT						ANCHOR LAYOUT[2,3]						ANCHORS[4,5]	EQUIPMENT PAD	EQUIPMENT PAD EPOXY DOWELS	DETAILS
ID	WEIGHT (LB)	WIDTH	LENGTH	DIA	HEIGHT	TYPE	TOTAL ANCHOR POINTS ALONG WIDTH	TOTAL ANCHOR POINTS ALONG LENGTH	'E'	'C'	'S'				
I-I	2000	I'-I I/4"	3'-4 I/2"	N/A	2'-0 3/4"	I	N/A	2	6"	5'	2'-6 I/2"	(4) 5/8"ø HILTI KB-TZ2 A304 SS EMBED = 4"	3'-4"X4'-6"X8" THICK W/#4 AT I2" OC EW, TOP	#4 HOOKED DOWELS AT 6" OC, EW, EMBED 6" MIN	I/S-I3 & 2/S-I3
I-2	500	N/A	N/A	-	-	I	N/A	N/A	6"	-	-	(4) 5/8"ø HILTI KB-TZ2 A304 SS EMBED = 4"	I'-6"XI'-6"X I0 I/2" THICK W/(3) #4 EW	#4 HOOKED DOWELS AT 5" OC, EW, EMBED 6" MIN	I/S-I3 & 2/S-I3
I-3	500	N/A	N/A	-	-	I	N/A	N/A	6"	-	-	(4) 5/8"ø HILTI KB-TZ2 A304 SS EMBED = 4"	2'-I"X2'-I"XI'-9" THICK W/#5 STIRRUPS AT I0" OC EW	#4 HOOKED DOWELS AT 5" OC EW, EMBED 6" MIN	I/S-I3 & 2/S-I3

FOOTNOTES:

(I) ANCHORAGE AND EQUIPMENT PAD INFORMATION IS BASED EQUIPMENT INFORMATION PROVIDED TO M&L AT THE TIME OF DESIGN. CONTRACTOR SHALL SUBMIT FINAL EQUIPMENT INFORMATION TO BE M&L FOR REVIEW PRIOR TO CONSTRUCTION. INFORMATION IS SUBJECT TO CHANGE BASED ON FINAL EQUIPMENT SUBMITTED.

(2) NUMBER OF ANCHOR POINTS NOTED SHALL BE PROVIDED ON EACH SIDE, EITHER ALONG WITH WIDTH OR LENGTH AS NOTED.

(3) FOR TYPE I ANCHORAGE THE TOTAL NUMBER OF ANCHORS IS PROVIDED. FOR ALL OTHER TYPES OF ANCHORAGE THE NUMBER OF ANCHORS PER ANCHOR POINT/CLIP ARE PROVIDED.

(4) UNLESS OTHERWISE NOTED ANCHOR EMBEDMENT SHALL BEGIN AT TOP OF (N) EQUIPMENT PAD.

(5) EQUIPMENT ANCHORS MAY BE INSTALLED ON I I/2" MAXIMUM OF GROUT.

EQUIPMENT ANCHORAGE AND PAD SCHEDULE (C -)
NO SCALE

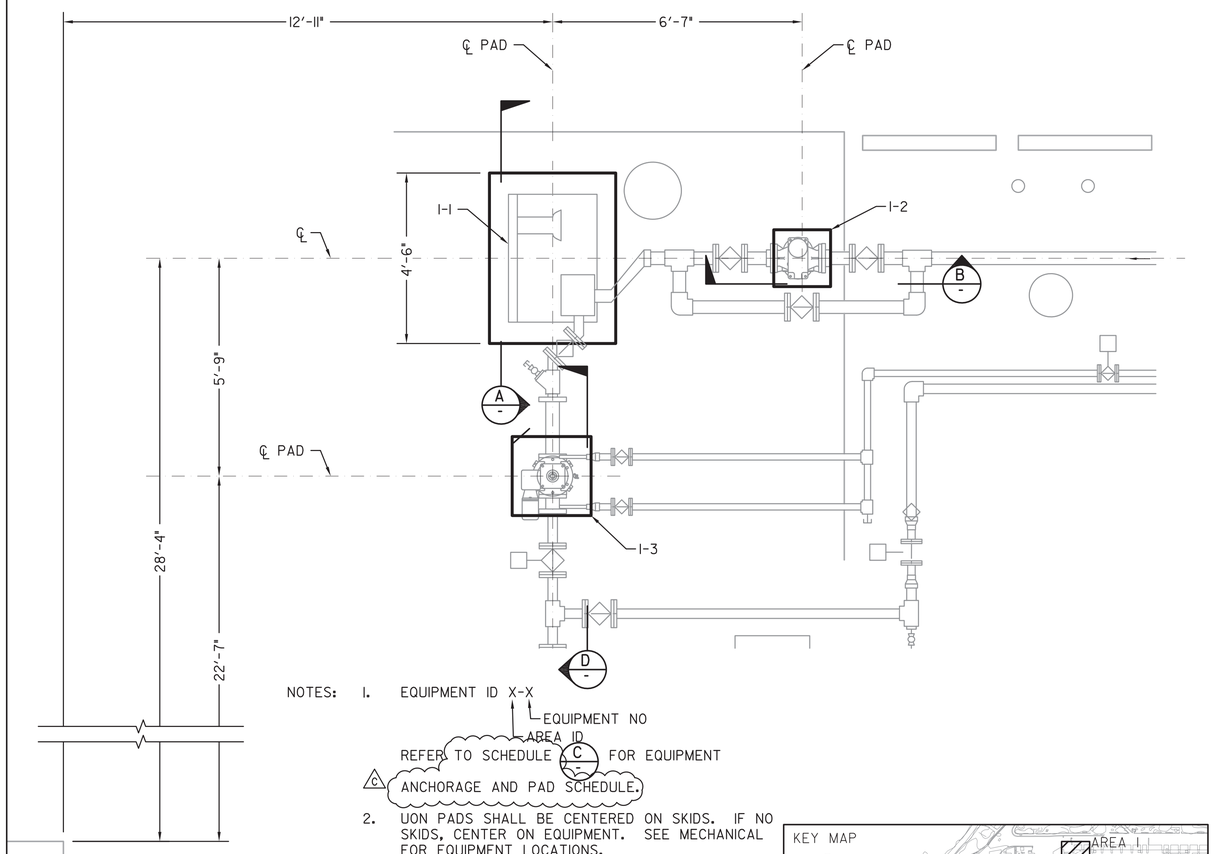

NOTES:

I. EQUIPMENT ID X-X
EQUIPMENT NO
AREA ID
REFER TO SCHEDULE (C -) FOR EQUIPMENT ANCHORAGE AND PAD SCHEDULE. (c)

2. UON PADS SHALL BE CENTERED ON SKIDS. IF NO SKIDS, CENTER ON EQUIPMENT. SEE MECHANICAL FOR EQUIPMENT LOCATIONS.

3. CONTRACTOR SHALL NOT INTERRUPT (E) REINF. FIELD LOCATE (E) REINF PRIOR TO DRILLING.

PI PUMP STATION PLAN (I -)
SCALE: I/2" = I'-0"

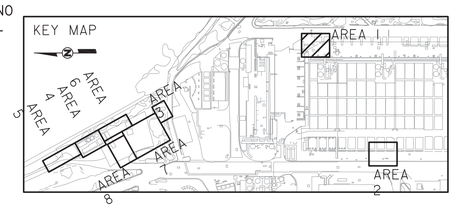

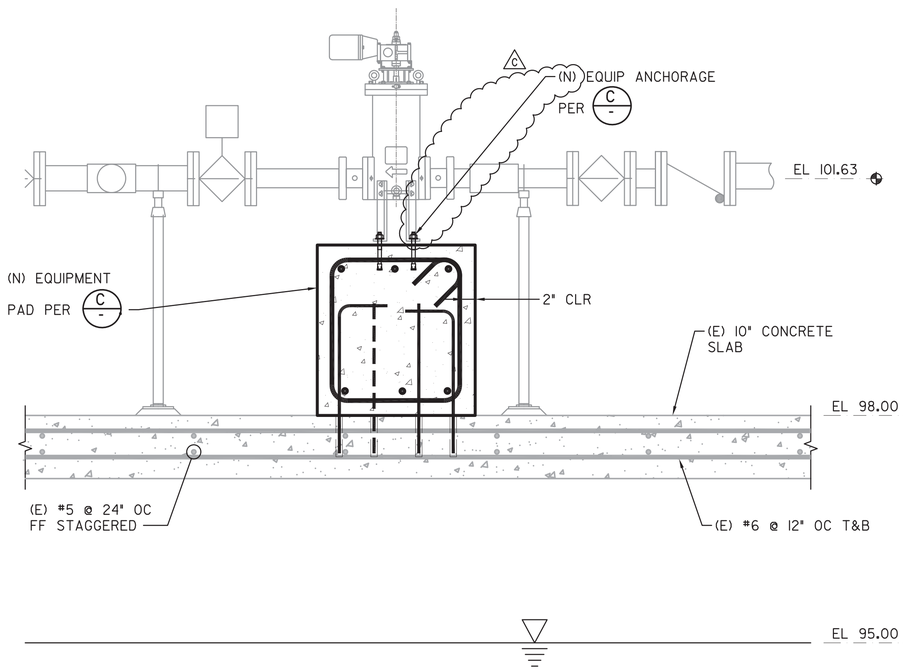

EQUIPMENT I-3 STRAINER (D -)
SCALE: I" = I'-0"

S-08

CENTRAL AREA SMALL-SCALE FACILITY STRUCTURAL AREA 1 PUMP STATION PLANS AND SECTIONS

CITY OF SAN DIEGO, CALIFORNIA
ENGINEERING AND CAPITAL PROJECTS DEPARTMENT
SHEET 43 OF 264 SHEETS

WBS B-2I15I

CONSULTANT: Stantec; Brown AND Caldwell; Trussell TECHNOLOGIES INC; MARTIN & LIBBY STRUCTURAL ENGINEERS

REGISTERED PROFESSIONAL ENGINEER JEAN M. LIBBY No. 38412 Exp. 03-31-23 CIVIL STATE OF CALIFORNIA 12/27/22

APPROVED FOR CITY ENGINEER ALICE ALTES 10/13/2022 DATE C68286 RCE#
PRINT DCE NAME

SUBMITTED BY: JOSEPH QUICHO, PROJECT MANAGER
CHECKED BY: MICHAEL VIOLANTE, PROJECT ENGINEER

DESCRIPTION	BY	APPROVED	DATE	FILMED
ORIGINAL	M&L		10/22	
(c) ADDENDUM C	M&L		12/22	

186-I692 CCS27 COORDINATE
I826444-6250407 CCS83 COORDINATE
DRAWING NO. 0100179-43-D
S08

CONTRACTOR
INSPECTOR
NTP DATE
NOC DATE

(c) ADDED NEW DESIGNATION TO CALLOUTS AND MOVED ARROWS. REVISED NOTES.

ADDENDUM C

AREA 1 PUMP STATION PLAN AND SECTIONS

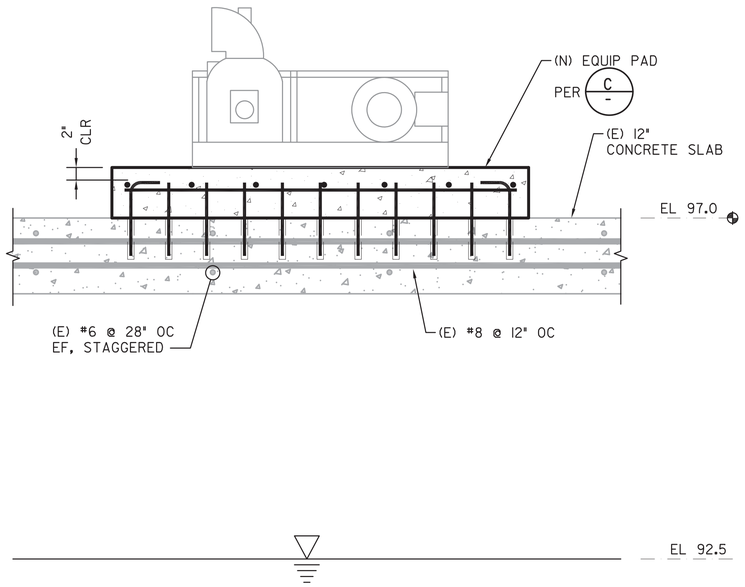

PE PUMP STATION SECTION
SCALE: 1" = 1'-0" (A -)

EQUIPMENT ANCHORAGE AND PAD SCHEDULE[1]

EQUIPMENT						ANCHOR LAYOUT[2,3]						ANCHORS[4,5]	EQUIPMENT PAD	EQUIPMENT PAD EPOXY DOWELS	DETAILS
ID	WEIGHT (LB)	WIDTH	LENGTH	DIA	HEIGHT	TYPE	TOTAL ANCHOR POINTS ALONG WIDTH	TOTAL ANCHOR POINTS ALONG LENGTH	'E'	'C'	'S'				
2-1	2000	2'-4"	3'-4 1/2"	N/A	2'-1 1/4"	1	N/A	2	4"	5"	2'-6 1/2"	(4) 5/8"Φ HILTI SS KWIK BOLT TZ2 EMBED = 4"	3'-4"X4'-6"X8" THICK W/#4 AT 12" OC EW, TOP	#4 HOOKED DOWELS AT 6" OC, EW, EMBED 6" MIN	(1 S-13) & (2 S-13)

FOOTNOTES:

(1) ANCHORAGE AND EQUIPMENT PAD INFORMATION IS BASED EQUIPMENT INFORMATION PROVIDED TO M&L AT THE TIME OF DESIGN. CONTRACTOR SHALL SUBMIT FINAL EQUIPMENT INFORMATION TO BE M&L FOR REVIEW PRIOR TO CONSTRUCTION. INFORMATION IS SUBJECT TO CHANGE BASED ON FINAL EQUIPMENT SUBMITTED.

(2) NUMBER OF ANCHOR POINTS NOTED SHALL BE PROVIDED ON EACH SIDE, EITHER ALONG WITH WIDTH OR LENGTH AS NOTED.

(3) FOR TYPE I ANCHORAGE THE TOTAL NUMBER OF ANCHORS IS PROVIDED. FOR ALL OTHER TYPES OF ANCHORAGE THE NUMBER OF ANCHORS PER ANCHOR POINT/CLIP ARE PROVIDED.

(4) UNLESS OTHERWISE NOTED ANCHOR EMBEDMENT SHALL BEGIN AT TOP OF (N) EQUIPMENT PAD.

(5) EQUIPMENT ANCHORS MAY BE INSTALLED ON 1 1/2" MAXIMUM OF GROUT.

EQUIPMENT ANCHORAGE AND PAD SCHEDULE
NO SCALE (C -)

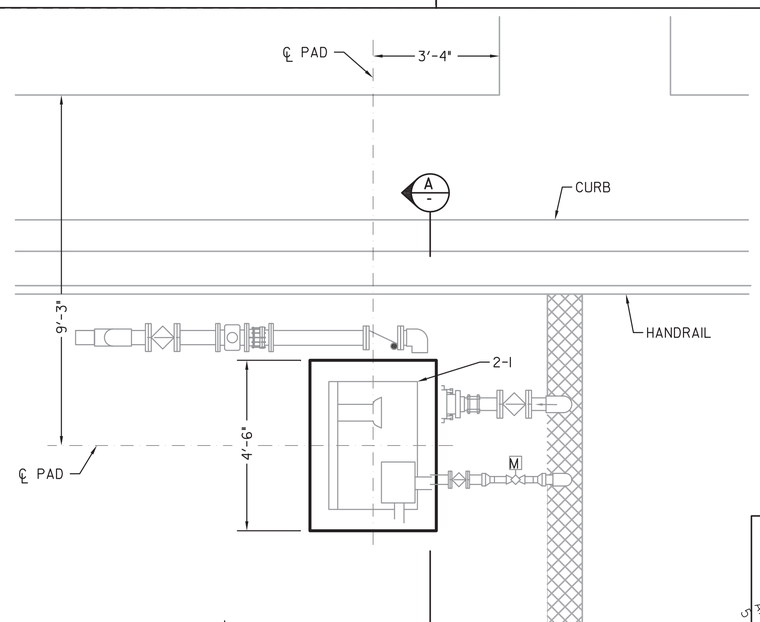

PE PUMP STATION PLAN
SCALE: 1/2" = 1'-0" (1 -)

NOTE: UON PADS SHALL BE CENTERED ON SKIDS. IF NO SKIDS, CENTER ON EQUIPMENT. SEE MECHANICAL FOR EQUIPMENT LOCATIONS.

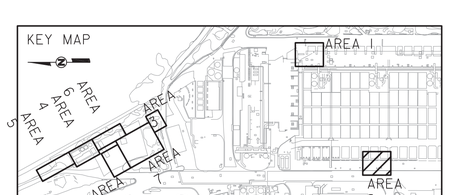

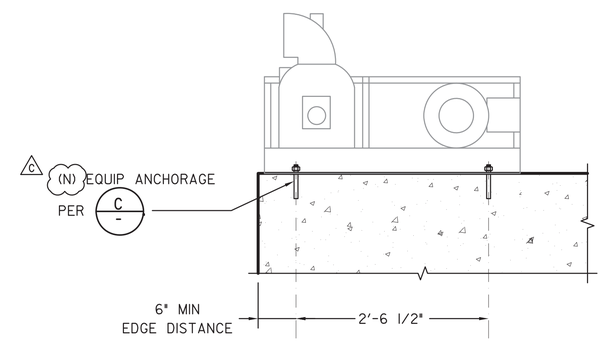

EQUIPMENT 2-1 PE PUMP SKID
SCALE: 1" = 1'-0" (B -)

S-09

CENTRAL AREA SMALL-SCALE FACILITY STRUCTURAL
AREA 2 PE PUMP STATION PLAN, SECTION & DETAIL

CITY OF SAN DIEGO, CALIFORNIA
ENGINEERING AND CAPITAL PROJECTS DEPARTMENT
SHEET 44 OF 264 SHEETS

WBS B-21151

CONSULTANT: Stantec; Brown AND Caldwell; Trussell TECHNOLOGIES INC; MARTIN & LIBBY STRUCTURAL ENGINEERS

REGISTERED PROFESSIONAL ENGINEER JEAN M. LIBBY No. 38412 Exp. 03-31-23 CIVIL STATE OF CALIFORNIA 12/27/22

APPROVED: FOR/CITY ENGINEER ALICE ALTES (PRINT DCE NAME) 10/13/2022 DATE C68286 RCE#

SUBMITTED BY: JOSEPH QUICHO, PROJECT MANAGER
CHECKED BY: MICHAEL VIOLANTE, PROJECT ENGINEER

DESCRIPTION	BY	APPROVED	DATE	FILMED
ORIGINAL	M&L		10/22	
C ADDENDUM C	M&L		12/22	

CONTRACTOR ____ NTP DATE ____
INSPECTOR ____ NOC DATE ____

I86-I692 CCS27 COORDINATE
I826444-6250407 CCS83 COORDINATE
DRAWING NO. 0100179-44-D S09

AREA 2 PE PUMP STATION PLAN, SECTION & DETAIL

C ADDED NEW DESIGNATION TO CALLOUT.

ADDENDUM C

FILENAME: CASSF-S-09.DWG

December 29, 2022
Pure Water Program (PWP) Central Area Small Scale Facility

EQUIPMENT ANCHORAGE AND PAD SCHEDULE[1]

EQUIPMENT						ANCHOR LAYOUT[2,3]									
ID	WEIGHT (LB)	WIDTH	LENGTH	DIAMETER	HEIGHT	TYPE	TOTAL ANCHOR POINTS ALONG WIDTH	TOTAL ANCHOR POINTS ALONG LENGTH	'E'	'C'	'S'	ANCHORS[4,5]	EQUIPMENT PAD[6,7] C	EQUIPMENT PAD EPOXY DOWELS C	DETAILS
3-1	500	N/A	N/A	N/A	N/A	1	N/A	N/A	4" MIN	-	-	(4) 5/8"ϕ HILTI KB-TZ2 A304 SS EMB = 4" MIN	4'-6" x 2'-8" W/ #4 AT 12" OC, EW	#4 DOWELS AT 24" OC, EW EMBED 5" MIN	2/S-13
3-2	500	N/A	N/A	N/A	N/A	1	N/A	N/A	4" MIN	-	-	(4) 5/8"ϕ HILTI KB-TZ2 A304 SS EMB = 4" MIN	4'-6" x 2'-8" W/ #4 AT 12" OC, EW	#4 DOWELS AT 24" OC, EW EMBED 5" MIN	2/S-13
3-3	55000	N/A	N/A	10'-0"	13'-0"	SEE A/S-18 SIM FOR ANCHORAGE						(24) 1 1/4"ϕ A304 HAS-R ATR W/HILTI HIT-RE[8] 500 V3 EPOXY EMB = 12" MIN INTO (N) MAT	OCTAGONAL PAD, L = 13'-0" W/#5 AT 12" OC, EW	#4 DOWELS AT 12" OC, EW EMBED 8" MIN	2/S-13

FOOTNOTES:

(1) ANCHORAGE AND EQUIPMENT PAD INFORMATION IS BASED ON EQUIPMENT INFORMATION PROVIDED TO M&L AT THE TIME OF DESIGN. CONTRACTOR SHALL SUBMIT FINAL EQUIPMENT INFORMATION TO M&L FOR APPROVAL PRIOR TO CONSTRUCTION. CONTRACTOR TO COORDINATE PAD LOCATIONS W/APPROVED EQUIPMENT ANCHORAGE SUBMITTALS.

(2) NUMBER OF ANCHOR POINTS NOTED SHALL BE PROVIDED ON EACH SIDE OF EACH PIECE OF EQUIPMENT, EITHER ALONG WITH WIDTH OR LENGTH AS NOTED.

(3) FOR TYPE 1 ANCHORAGE THE TOTAL NUMBER OF ANCHORS PER PIECE OF EQUIPMENT IS PROVIDED. FOR ALL OTHER TYPES OF ANCHORAGE THE NUMBER OF ANCHORS PER ANCHOR POINT/CLIP ARE PROVIDED.

(4) UNLESS OTHERWISE NOTED ANCHOR EMBEDMENT SHALL BEGIN AT TOP OF (N) EQUIPMENT PAD.

(5) EQUIPMENT ANCHORS MAY BE INSTALLED ON 1 1/2" MAXIMUM OF GROUT.

(6) UON PADS SHALL BE CENTERED ON SKIDS, IF NO SKIDS CENTER ON EQUIPMENT. SEE MECHANICAL FOR EQUIPMENT LOCATIONS.

(7) SEE A/S-39 FOR 'L' DIMENSION AT C OCTAGONAL PADS.

(8) ANCHOR EMBEDMENT SHALL BEGIN AT TOP OF (N) MAT FOUNDATION.

EQUIPMENT ANCHORAGE AND PAD SCHEDULE
NO SCALE — F/S-11

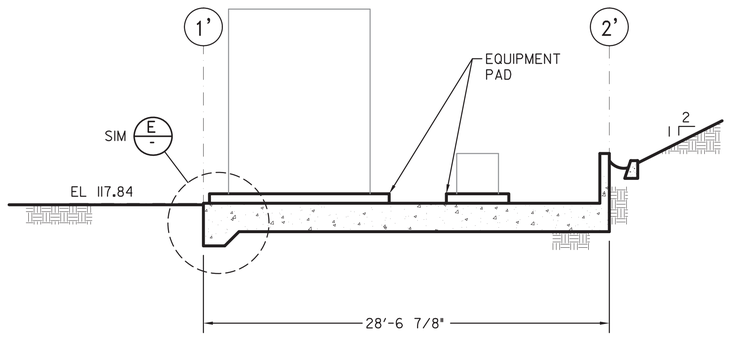

BLENDING TANK SECTION
SCALE: 3/16" = 1'-0" — A/-

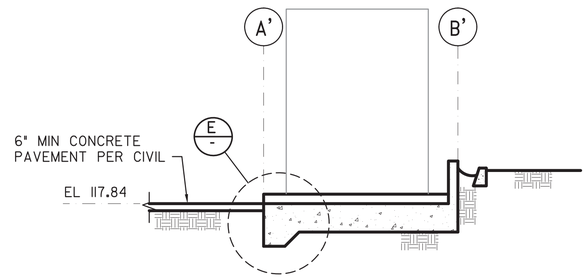

BLENDING TANK SECTION
SCALE: 3/16" = 1'-0" — B/-

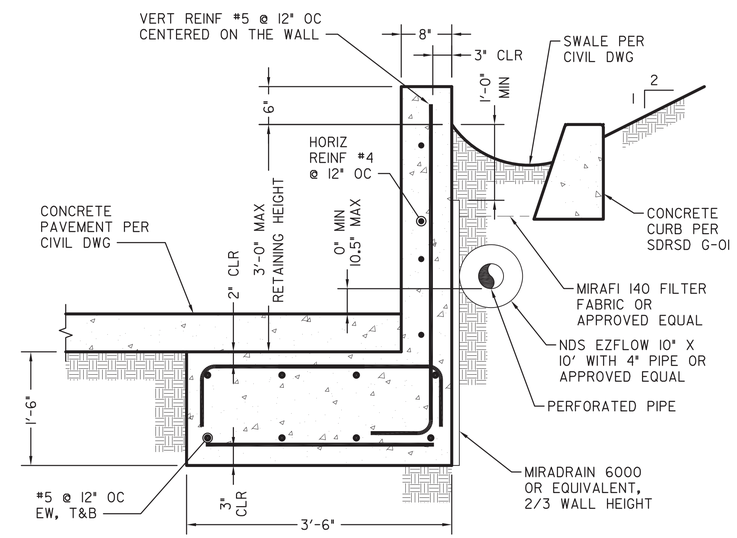

3'-0" MAX CONCRETE RETAINING WALL SECTION
SCALE: 1" = 1'-0" — C/-

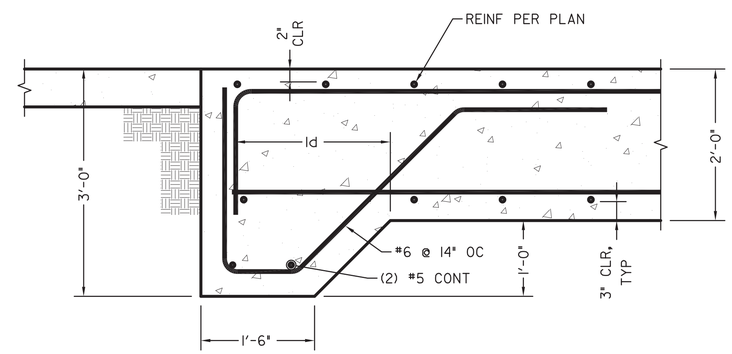

CONCRETE SECTION
SCALE: 1" = 1'-0" — E/-

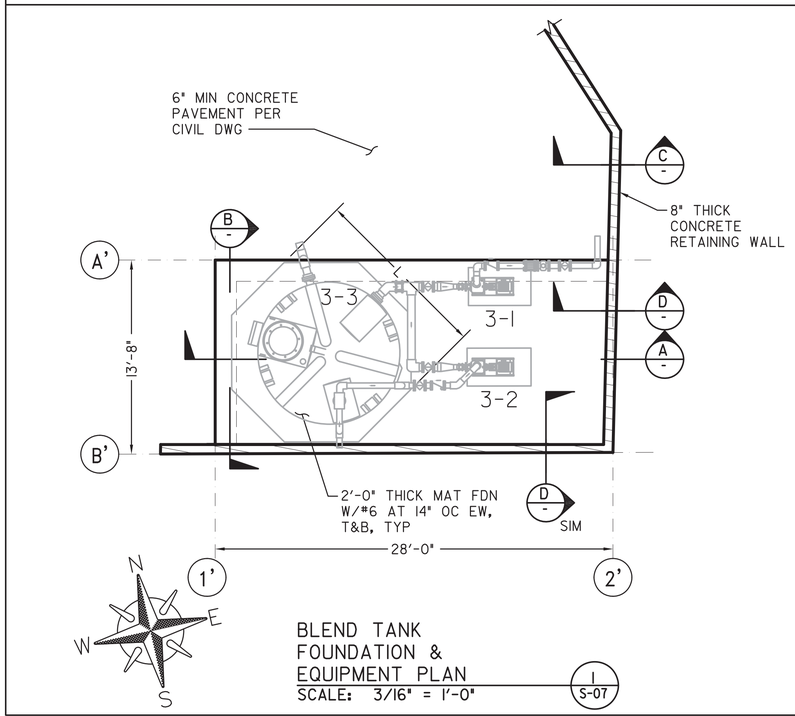

BLEND TANK FOUNDATION & EQUIPMENT PLAN
SCALE: 3/16" = 1'-0" — 1/S-07

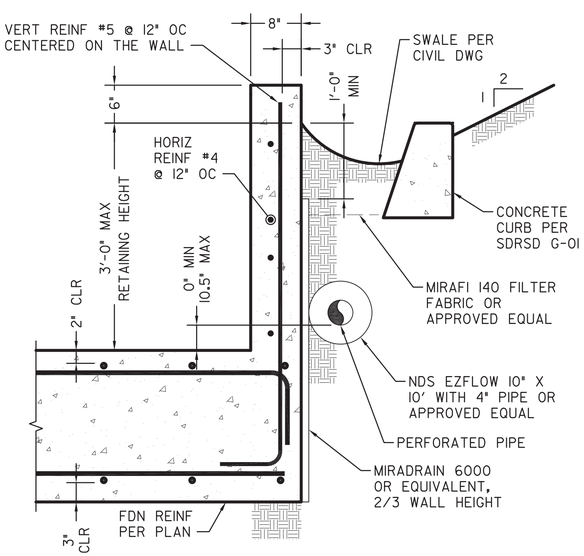

3'-0" MAX CONCRETE RETAINING WALL SECTION AT PAD
SCALE: 1" = 1'-0" — D/-

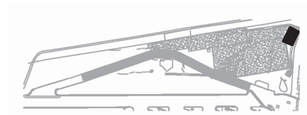

KEY MAP

AREA 3 BLENDING TANK PLANS AND SECTION

S-10

CENTRAL AREA SMALL-SCALE FACILITY
STRUCTURAL
AREA 3 BLENDING TANK
PLANS AND SECTION

CITY OF SAN DIEGO, CALIFORNIA
ENGINEERING AND CAPITAL PROJECTS DEPARTMENT
SHEET 45 OF 264 SHEETS

WBS B-21151

APPROVED: FOR CITY ENGINEER ALICE ALTES, PRINT DCE NAME — DATE 10/13/2022 — RCE# C68286

SUBMITTED BY: JOSEPH QUICHO, PROJECT MANAGER
CHECKED BY: MICHAEL VIOLANTE, PROJECT ENGINEER

DESCRIPTION	BY	APPROVED	DATE	FILMED
ORIGINAL	M&L		10/22	
C ADDENDUM C	M&L		12/22	

CONSULTANT: Stantec; Brown AND Caldwell; Trussell TECHNOLOGIES INC; MARTIN & LIBBY STRUCTURAL ENGINEERS

REGISTERED PROFESSIONAL ENGINEER — JEAN M. LIBBY — No. 38412 — Exp. 03-31-23 — CIVIL — STATE OF CALIFORNIA — 12/27/22

CONTRACTOR ____ NTP DATE ____
INSPECTOR ____ NOC DATE ____

186-1692 CCS27 COORDINATE
1826444-6250407 CCS83 COORDINATE
DRAWING NO. 0100179-45-D — S10

C REVISED EQUIPMENT ANCHORAGE AND PAD SCHEDULE DETAIL CALLOUTS AND NOTE.

ADDENDUM C

FILENAME: CASSF-S-10.DWG

December 29, 2022
Pure Water Program (PWP) Central Area Small Scale Facility

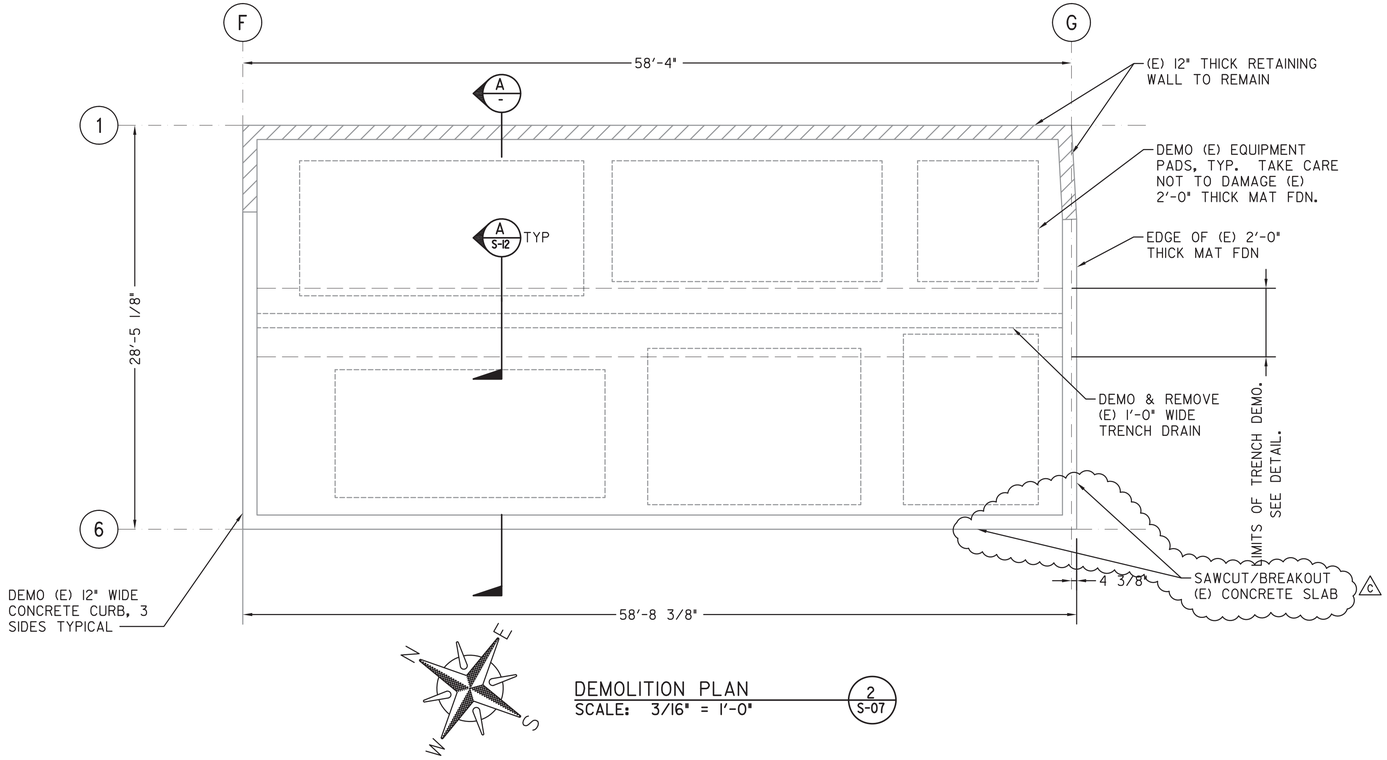

DEMOLITION PLAN
SCALE: 3/16" = 1'-0"
2 / S-07

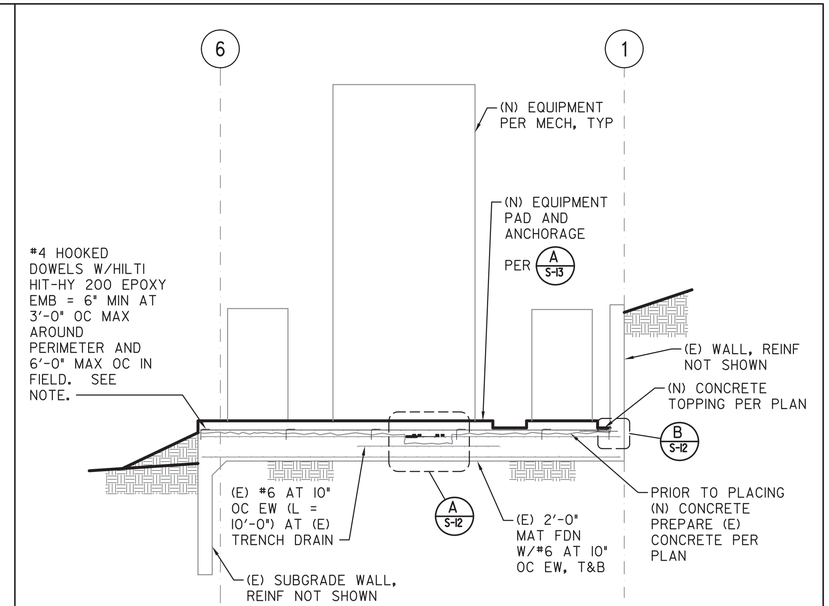

NOTE: CONTRACTOR SHALL NOT INTERRUPT (E) REINF. FIELD LOCATE (E) REINF PRIOR TO DRILLING.

BNR TANK SECTION
SCALE: 3/16" = 1'-0"
A / -

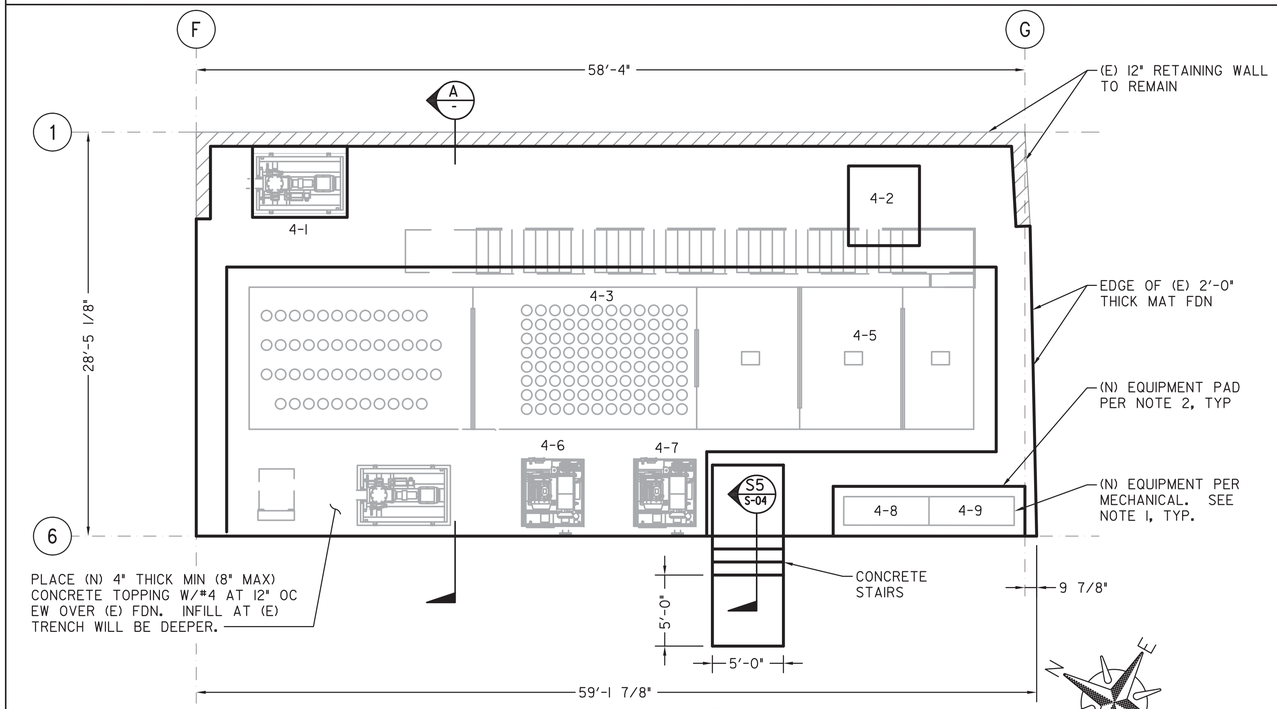

FOUNDATION AND EQUIPMENT PLAN
SCALE: 3/16" = 1'-0"
1 / S-07

NOTES:

1. EQUIPMENT ID X-X
   - EQUIPMENT NO
   - AREA ID

   REFER TO EQUIPMENT SCHEDULE A / S-13 FOR EQUIPMENT INFORMATION AND ANCHORAGE.
2. SEE A / S-13 FOR EQUIPMENT PADS.
3. (E) SURFACE SHALL BE ROUGHENED TO 1/4" MIN AMPLITUDE, REMOVE ALL LAITANCE. MOISTEN (E) SURFACE TO SATURATED SURFACE DRY CONDITION PRIOR TO PLACING (N) CONCRETE.
4. CONTRACTOR TO COORDINATE PAD LOCATIONS W/APPROVED EQUIPMENT ANCHORAGE SUBMITTALS.

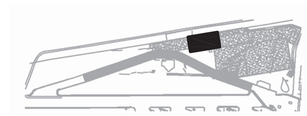

KEY MAP

S-11

CENTRAL AREA SMALL-SCALE FACILITY STRUCTURAL AREA 4 BNR TANK PLANS AND SECTION

CITY OF SAN DIEGO, CALIFORNIA
ENGINEERING AND CAPITAL PROJECTS DEPARTMENT
SHEET 46 OF 264 SHEETS

WBS B-21151

CONSULTANT: Stantec; Brown AND Caldwell; Trussell TECHNOLOGIES INC; M&L MARTIN & LIBBY STRUCTURAL ENGINEERS

REGISTERED PROFESSIONAL ENGINEER JEAN M. LIBBY No. 38412 Exp. 03-31-23 CIVIL STATE OF CALIFORNIA 12/27/22

APPROVED: FOR CITY ENGINEER ALICE ALTES, PRINT DCE NAME — DATE 10/13/2022 — RCE# C68286

SUBMITTED BY: JOSEPH QUICHO, PROJECT MANAGER
CHECKED BY: MICHAEL VIOLANTE, PROJECT ENGINEER

DESCRIPTION	BY	APPROVED	DATE	FILMED
ORIGINAL	M&L		10/22	
C ADDENDUM C	M&L		12/22	

CONTRACTOR ____ NTP DATE ____
INSPECTOR ____ NOC DATE ____

I86-I692 CCS27 COORDINATE
I826444-6250407 CCS83 COORDINATE
DRAWING NO. 0100179-46-D — S11

C ADDED CALLOUT.

ADDENDUM C

FILENAME: CASSF-S-11.DWG

December 29, 2022
Pure Water Program (PWP) Central Area Small Scale Facility

EQUIPMENT ANCHORAGE AND PAD SCHEDULE[1]

EQUIPMENT						ANCHOR LAYOUT[2]						ANCHORS[3,4,5]	EQUIPMENT PAD (WXL)[6,7]	EQUIPMENT PAD EPOXY DOWELS[8] C
ID	WEIGHT (LB)	WIDTH N-S	LENGTH E-W	DIAMETER	HEIGHT	TYPE	TOTAL ANCHOR POINTS ALONG WIDTH	TOTAL ANCHOR POINTS ALONG LENGTH	'E'	'C'	'S'			
4-1	2400B	4'-3"	6'-1"	N/A	7'-10"	1	N/A	N/A	6" MIN	-	-	(4) 3/4"ø HILTI KB-TZ2 A304 SS EMB = 3 1/4" MIN	5'-0" x 6'-8"	#4 DOWELS AT 24" OC, EW EMBED 5" MIN
4-2	1700	5'-2"	5'-0"	N/A	3'-7"	1	N/A	2 ANCHOR POINTS	6" MIN	8"	-	(4) 5/8"ø HILTI KB-TZ2 A304 SS EMB = 3 1/4" MIN	6'-0" x 5'-10"	#4 DOWELS AT 24" OC, EW EMBED 5" MIN
4-3	773000	10'-0"	51'-0"	N/A	23'-0"	2B	4 ANCHOR POINTS	24 ANCHOR POINTS	15" MIN	12"	±24"	(2) 1"ø A304 HAS-R ATR W/HILTI HIT-HY 200 EPOXY EMB = 12" MIN INTO (E) MAT	54'-2" x (13'-2" + DISTANCE FROM WEST FACE OF TANK TO WEST SLAB EDGE) SEE 1/S-11	#4 DOWELS AT 12" OC, AROUND PERIMETER, EMBED 6" MIN
4-4	2000	2'-8"	1'-11"	N/A	4'-1"	1	N/A	N/A	4" MIN	-	-	(4) 5/8"ø HILTI KB-TZ2 A304 SS EMB = 3 1/4" MIN	COMBINED EQUIPMENT PAD WITH 4-3	
4-5	2400	4'-3"	6'-1"	N/A	7'-10"	1	N/A	N/A	6" MIN	-	-	(4) 3/4"ø HILTI KB-TZ2 A304 SS EMB = 3 1/4" MIN		
4-6	1200	4'-9"	4'-2"	N/A	4'-10"	1	N/A	N/A	4" MIN	-	-	(4) 1/2"ø HILTI KB-TZ2 A304 SS EMB = 3 1/4" MIN		
4-7	1200	4'-9"	4'-2"	N/A	4'-10"	1	N/A	N/A	4" MIN	-	-	(4) 1/2"ø HILTI KB-TZ2 A304 SS EMB = 3 1/4" MIN		
4-8	1400	2'-6"	6'-3"	N/A	8'-0"	2A	N/A	2 ANCHOR POINTS	4" MIN	4"	5'-7"	(4) 1/2"ø HILTI KB-TZ2 A304 SS EMB = 3 1/4" MIN	3'-6" x 13'-6" W/ #4 AT 24" OC, EW	#4 DOWELS AT 24" OC, EW EMBED 5" MIN
4-9	1400	2'-6"	6'-3"	N/A	8'-0"	2A	N/A	2 ANCHOR POINTS	4" MIN	4"	5'-7"	(4) 1/2"ø HILTI KB-TZ2 A304 SS EMB = 3 1/4" MIN	COMBINED EQUIPMENT PAD WITH 4-8	

FOOTNOTES:

(1) ANCHORAGE AND EQUIPMENT PAD INFORMATION IS BASED ON EQUIPMENT INFORMATION PROVIDED TO M&L AT THE TIME OF DESIGN. CONTRACTOR SHALL SUBMIT FINAL EQUIPMENT INFORMATION TO M&L FOR APPROVAL PRIOR TO CONSTRUCTION. CONTRACTOR TO COORDINATE PAD LOCATIONS W/APPROVED EQUIPMENT ANCHORAGE SUBMITTALS.

(2) NUMBER OF ANCHOR POINTS NOTED SHALL BE PROVIDED ON EACH SIDE OF EACH PIECE OF EQUIPMENT, EITHER ALONG WIDTH OR LENGTH AS NOTED.

(3) FOR TYPE 1 ANCHORAGE THE TOTAL NUMBER OF ANCHORS PER PIECE OF EQUIPMENT IS PROVIDED. FOR ALL OTHER TYPES OF ANCHORAGE THE NUMBER OF ANCHORS PER ANCHOR POINT/CLIP ARE PROVIDED.

(4) UNLESS OTHERWISE NOTED ANCHOR EMBEDMENT SHALL BEGIN AT TOP OF (N) EQUIPMENT PAD.

(5) EQUIPMENT ANCHORS MAY BE INSTALLED ON 1 1/2" MAXIMUM OF GROUT.

(6) U.O.N. PADS SHALL BE CENTERED ON SKIDS. IF NO SKIDS, CENTER ON EQUPMENT. SEE MECHANICAL FOR EQUIPMENT LOCATIONS.

(7) U.O.N PAD REINF TO BE SAME SIZE AND SPACING AS EPOXY DOWELS.

(8) ALL EQUIPMENT REFERENCES DETAILS 1/- AND 2/-.

EQUIPMENT ANCHORAGE AND PAD SCHEDULE — A/S-11
NO SCALE

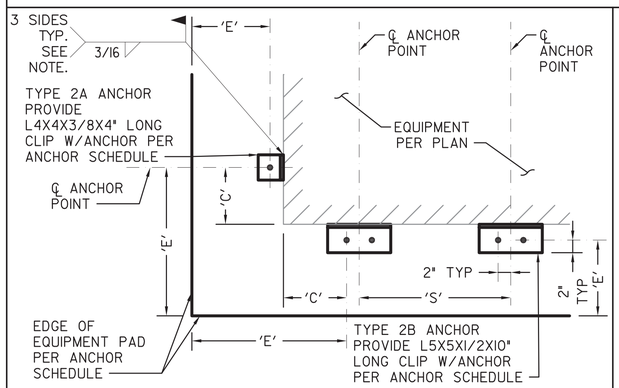

NOTE: CONNECTION OF ANCHOR CLIP ASSUMES EQUIPMENT MATERIAL TO RECEIVE WELD IS 3/16" MINIMUM THICKNESS STRUCTURAL STEEL, Fy = 36 KSI MIN.

TYPE 2A/2B ANCHORAGE — 1/-
SCALE: 1" = 1'-0"

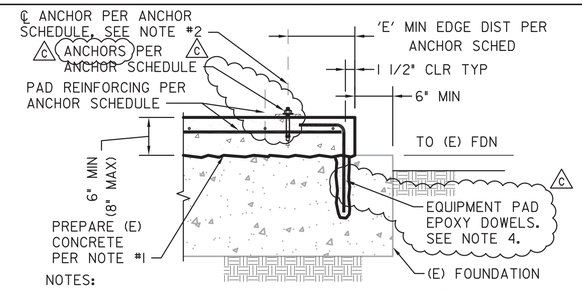

NOTES:

1. ROUGHEN EXISTING SURFACE TO A MINIMUM 1/4" AMPLITUDE. REMOVE ALL LAITANCE AND MOISTEN EXISTING SURFACES TO A SATURATED SURFACE DRY CONDITION PRIOR TO PLACING NEW CONCRETE
2. REFER TO ANCHOR SCHEDULE FOR CONDITIONS WHERE ANCHOR EMBEDMENT BEGINS AT TOP OF (E) FOUNDATION.
3. CONTRACTOR SHALL NOT INTERRUPT (E) REINF. FIELD LOCATE (E) REINF PRIOR TO DRILLING.
4. C EQUIPMENT PAD EPOXY DOWELS MAY BE CAST-IN-PLACE RATHER THAN POST-INSTALLED BUT EMBED LENGTHS SHALL BE PER TYPICAL DETAILS S10 AND S11 ON S-05.

EQUIPMENT PAD — 2/-
SCALE: 1" = 1'-0"

AREA 4 BNR TANK EQUIP ANCHORAGE & PAD SCHEDULE

S-13

CENTRAL AREA SMALL-SCALE FACILITY
STRUCTURAL
AREA 4 BNR TANK EQUIP ANCHORAGE
& PAD SCHEDULE

CITY OF SAN DIEGO, CALIFORNIA
ENGINEERING AND CAPITAL PROJECTS DEPARTMENT
SHEET 48 OF 264 SHEETS

WBS B-21151

CONSULTANT: Stantec, Brown AND Caldwell, Trussell TECHNOLOGIES INC, MARTIN & LIBBY STRUCTURAL ENGINEERS

REGISTERED PROFESSIONAL ENGINEER JEAN M. LIBBY No. 38412 Exp. 03-31-23 CIVIL STATE OF CALIFORNIA 12/27/22

APPROVED: FOR CITY ENGINEER ALICE ALTES PRINT DCE NAME — DATE 10/13/2022 — RCE# C68286

SUBMITTED BY: JOSEPH QUICHO, PROJECT MANAGER
CHECKED BY: MICHAEL VIOLANTE, PROJECT ENGINEER

DESCRIPTION	BY	APPROVED	DATE	FILMED
ORIGINAL	M&L		10/22	
C ADDENDUM C	M&L		12/22	

186-1692 CCS27 COORDINATE
1826444-6250407 CCS83 COORDINATE
DRAWING NO. 0100179-48-D
S13

CONTRACTOR
INSPECTOR
NTP DATE
NOC DATE

C ADDED SUPERSCRIPT TO EQUIPMENT ANCHORAGE AND PAD SCHEDULE HEADER AND REVISED/ADDED NOTES AND CALLOUT TO EQUIPMENT PAD.

ADDENDUM C

FILENAME: CASSF-S-13.DWG

AREA 5 MBR SYSTEM EQUIP ANCHORAGE & PAD SCHEDULE

EQUIPMENT ANCHORAGE SCHEDULE (1)(2) C

EQUIPMENT								DETAILS
ID	WEIGHT (LB)	WIDTH N-S	LENGTH E-W	DIAMETER	HEIGHT	'E'	ANCHORS	
5-1	500	4'-8"	2'-0"	N/A	4'-3"	6"	(4) 1/2"ϕ HILTI KB-TZ2 A304 SS EMB = 3 1/4" MIN	B / S-17
5-2	2000	6'-6"	5'-0"	N/A	5'-9"	6"	(6) 5/8"ϕ HILTI KB-TZ2 A304 SS EMB = 4" MIN	D / S-17
5-3	1500	3'-7"	3'-3"	N/A	3'-11"	6"	(4) 5/8"ϕ HILTI KB-TZ2 A304 SS EMB = 4" MIN	C / S-17
5-4	55000	10'-0"	7'-1"	N/A	10'-6"	1'-0"	(12) 1"ϕ CIP ANCHORS EMB = 12" MIN	E / S-17
5-5	115000	N/A	N/A	12'-0"	17'-3"	1'-0"	(24) 1 1/4"ϕ CIP ANCHORS EMB = 12" MIN	A / S-18
5-6	115000	N/A	N/A	12'-0"	17'-3"	1'-0"	(24) 1 1/4"ϕ CIP ANCHORS EMB = 12" MIN	A / S-18
5-7	30000	N/A	N/A	7'-6"	10'-6"	1'-0"	(16) 1"ϕ CIP ANCHORS EMB = 12" OR (16) 1"ϕ A304 HAS-R ATR W/HILTI HIT-RE 500 V3 EPOXY EMB = 12" MIN	B / S-18
5-8	2000	6'-6"	5'-0"	N/A	5'-9"	6"	(6) 5/8"ϕ HILTI KB-TZ2 A304 SS EMB = 4" MIN	D / S-17
5-9	7000	N/A	N/A	3'-4"	10'-0"	1'-0"	(12) 7/8"ϕ A304 HAS-R ATR W/HILTI HIT-RE 500 V3 EPOXY EMB = 10" MIN	C / S-18

FOOTNOTES:

(1) ANCHORAGE C INFORMATION IS BASED ON EQUIPMENT INFORMATION PROVIDED TO M&L AT THE TIME OF DESIGN. CONTRACTOR SHALL SUBMIT FINAL EQUIPMENT INFORMATION TO M&L FOR APPROVAL PRIOR TO CONSTRUCTION. CONTRACTOR TO COORDINATE EQUIPMENT LOCATIONS W/APPROVED EQUIPMENT ANCHORAGE SUBMITTALS.

C (2) AREA 5 HAS NO EQUIPMENT PADS.

EQUIPMENT ANCHORAGE — A / S-14
NO SCALE

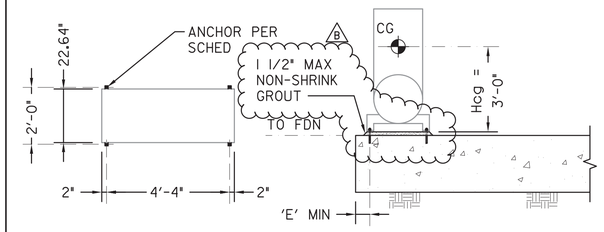

PLAN ELEVATION

EQUIPMENT 5-1 AIR COMPRESSOR — B / -
SCALE: 3/8" = 1'-0"

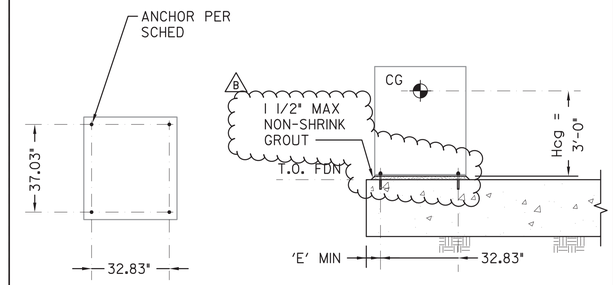

PLAN ELEVATION

EQUIPMENT 5-3 AIR BLOWER — C / -
SCALE: 3/8" = 1'-0"

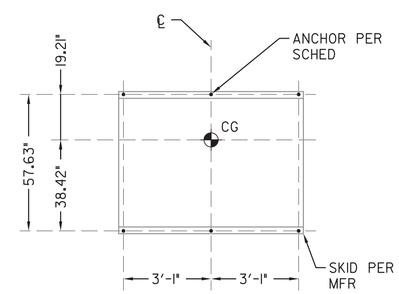

PLAN

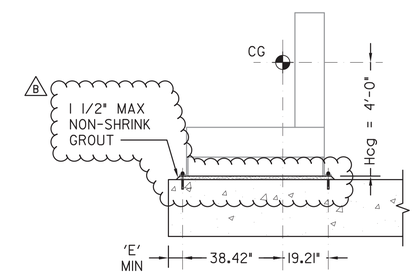

ELEVATION

EQUIPMENT 5-2 & 5-8 FILTRATE PUMP SKID — D / -
SCALE: 3/8" = 1'-0"

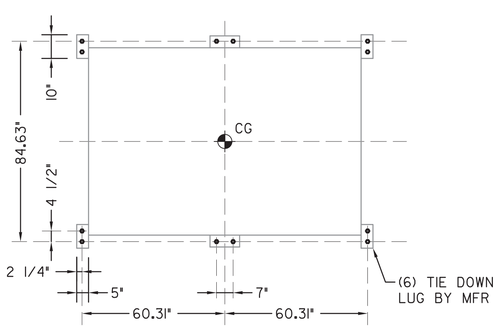

ANCHOR BOLT LAYOUT

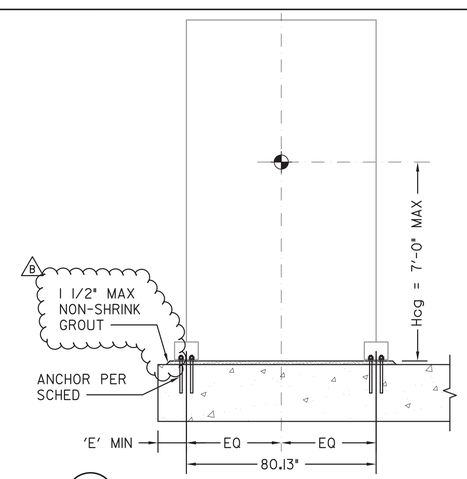

ELEVATION

EQUIPMENT 5-4 MBR TANK — E / -
SCALE: 3/8" = 1'-0"

S-17

CENTRAL AREA SMALL-SCALE FACILITY
STRUCTURAL
AREA 5 MBR SYSTEM EQUIPMENT
ANCHORAGE & PAD SCHEDULE

CITY OF SAN DIEGO, CALIFORNIA
ENGINEERING AND CAPITAL PROJECTS DEPARTMENT
SHEET 52 OF 264 SHEETS

WBS B-21151

CONSULTANT: Stantec; Brown AND Caldwell; Trussell TECHNOLOGIES INC; MARTIN & LIBBY STRUCTURAL ENGINEERS

REGISTERED PROFESSIONAL ENGINEER — JEAN M. LIBBY — No. 38412 — Exp. 03-31-23 — CIVIL — STATE OF CALIFORNIA — 12/27/22

APPROVED: FOR CITY ENGINEER ALICE ALTES — DATE 10/13/2022 — RCE# C68286

SUBMITTED BY: JOSEPH QUICHO, PROJECT MANAGER
CHECKED BY: MICHAEL VIOLANTE, PROJECT ENGINEER

DESCRIPTION	BY	APPROVED	DATE	FILMED
ORIGINAL	M&L		10/22	
B ADDENDUM B	M&L		12/22	
C ADDENDUM C	M&L		12/22	

CCS27 COORDINATE: 186-1692
CCS83 COORDINATE: 1826444-6250407
DRAWING NO. 0100179-52-D — S17

CONTRACTOR
INSPECTOR
NTP DATE
NOC DATE

FILENAME: CASSF-S-17.DWG

C REVISED NOTES. B ADDED NON-SHRINK GROUT.

ADDENDUM C

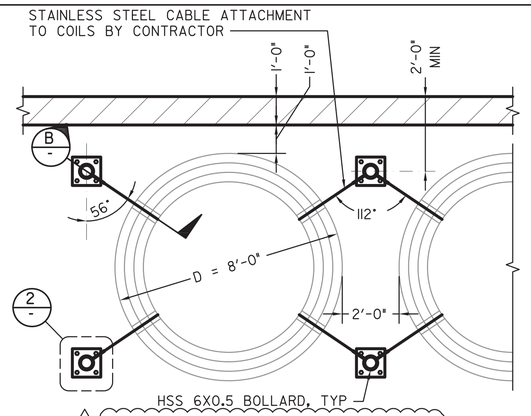

EQUIPMENT 6-1 COILED LOOP PIPES (1 / S-19)
SCALE: 3/8" = 1'-0"

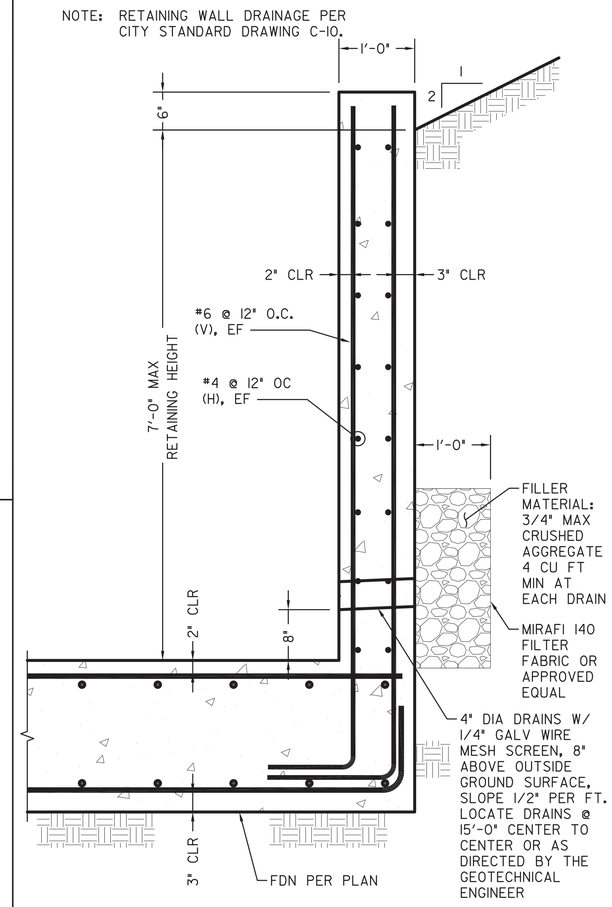

7'-6" MAX CONCRETE RETAINING WALL SECTION (A / S-19)
SCALE: 1" = 1'-0"

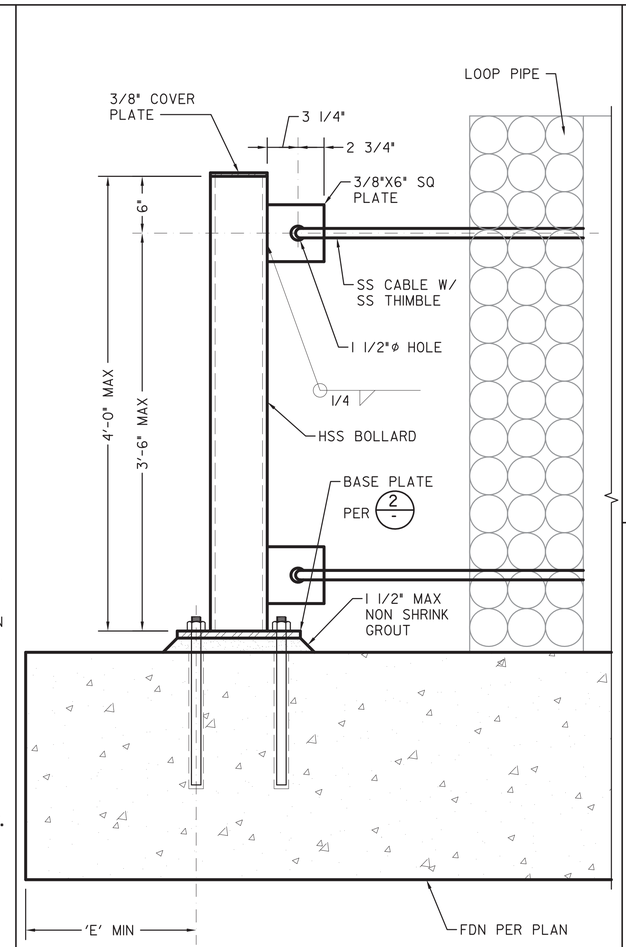

NOTE: ALL STEEL TO BE HOT DIP GALVANIZED UON.

HSS BOLLARD DETAIL (B / -)
SCALE: 1 1/2" = 1'-0"

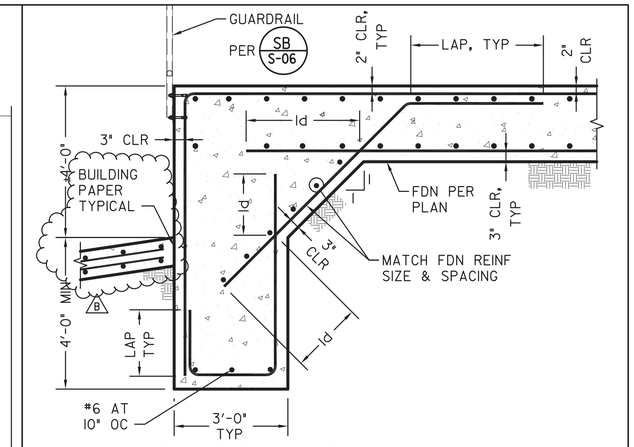

THICKENED FDN EDGE REINFORCMENT DETAIL (C / S-19)
SCALE: 1/2" = 1'-0"

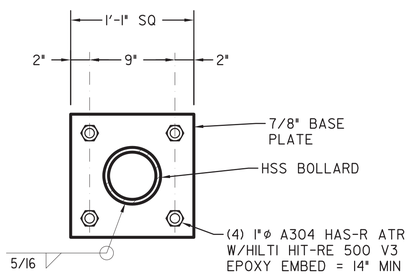

HSS BOLLARD BASE PLATE ANCHORAGE (2 / -)
SCALE: 1 1/2" = 1'-0"

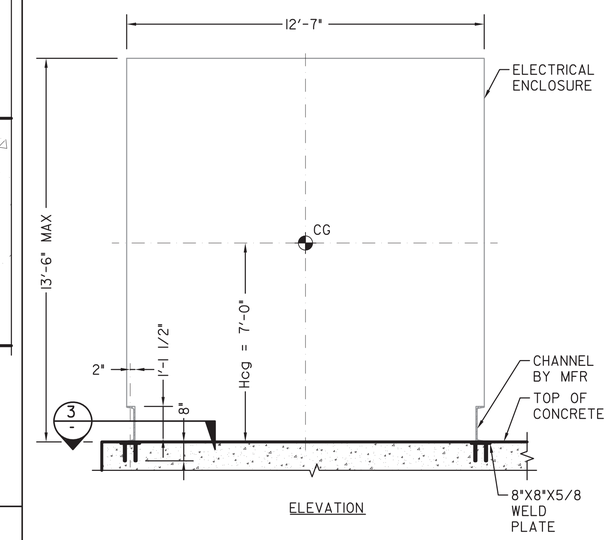

NOTE: 1. LOCATE EQUIPMENT PER MECHANICAL.
C 2. AREA 6 HAS NO EQUIPMENT PADS.

EQUIPMENT 6-2 ELECTRICAL ENCLOSURE (D / S-19)
SCALE: 3/8" = 1'-0"

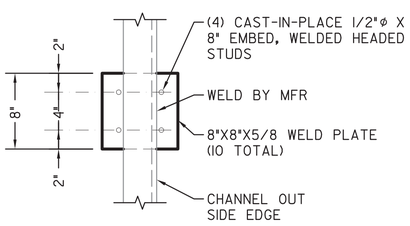

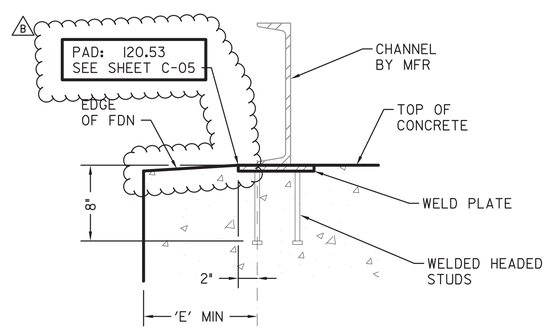

NOTE: ALL STEEL TO BE HOT DIP GALVANIZED, UON, TYP.

EQUIPMENT 6-2 BASE PLATE ANCHORAGE (3 / -)
SCALE: 1 1/2" = 1'-0"

S-20

CENTRAL AREA SMALL-SCALE FACILITY STRUCTURAL
AREA 6 PIPE LOOPS/EQUIP ENCLOSURE SECTIONS & CONC ANCHORAGE DETAILS

CITY OF SAN DIEGO, CALIFORNIA
ENGINEERING AND CAPITAL PROJECTS DEPARTMENT
SHEET 55 OF 264 SHEETS

WBS B-21151

CONSULTANT: Stantec; Brown AND Caldwell; Trussell TECHNOLOGIES INC; MARTIN & LIBBY STRUCTURAL ENGINEERS

REGISTERED PROFESSIONAL ENGINEER — JEAN M. LIBBY — No. 38412 — Exp. 03-31-23 — CIVIL — STATE OF CALIFORNIA — 12/27/22

APPROVED: FOR CITY ENGINEER — ALICE ALTES — PRINT DCE NAME — RCE# C68286 — DATE 10/13/2022

SUBMITTED BY: JOSEPH QUICHO, PROJECT MANAGER
CHECKED BY: MICHAEL VIOLANTE, PROJECT ENGINEER

DESCRIPTION	BY	APPROVED	DATE	FILMED
ORIGINAL	M&L		10/22	
B ADDENDUM B	M&L		12/22	
C ADDENDUM C	M&L		12/22	

186-1692 CCS27 COORDINATE
1826444-6250407 CCS83 COORDINATE
DRAWING NO. 0100179-55-D — S20

CONTRACTOR ____ NTP DATE ____
INSPECTOR ____ NOC DATE ____

AREA 6 PIPE LOOPS/EQUIP ENCLOSURE SECTIONS & CONC ANCHORAGE DETAILS

C ADDED NOTES.
B CHANGED CONCRETE PAVEMENT TO SLAB, ADDED BUILDING PAPER AND PAD NOTE.

ADDENDUM C

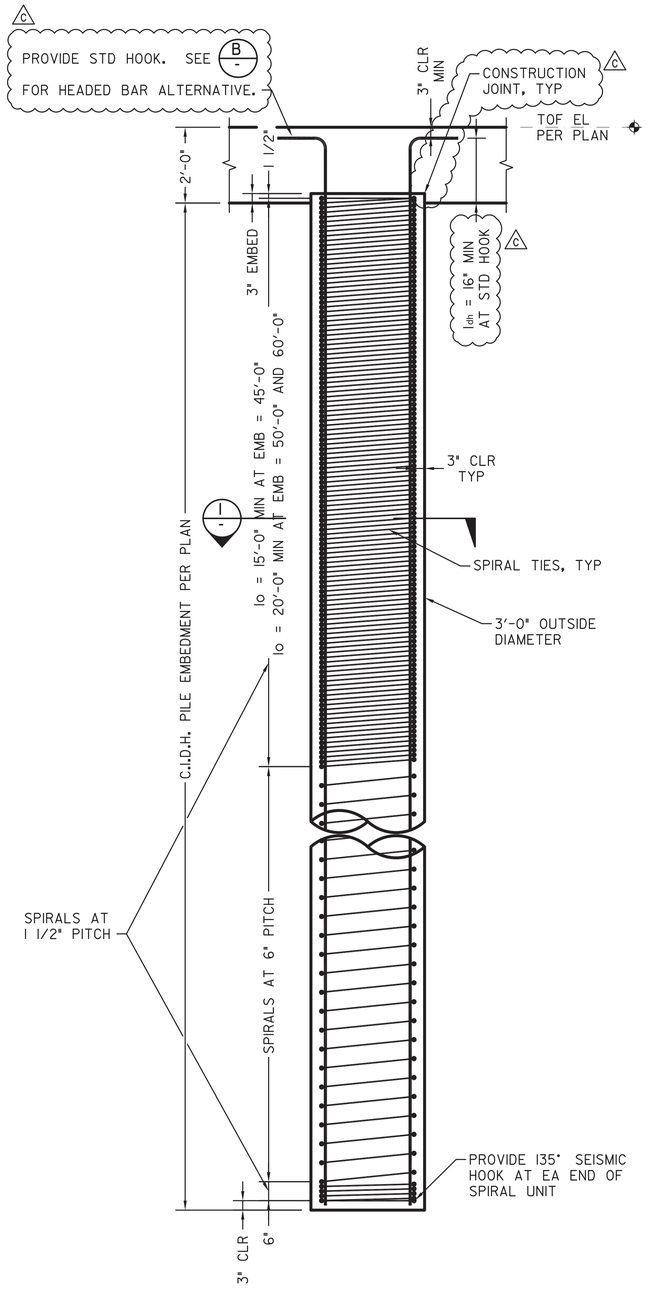

TYPICAL PILE ELEVATION

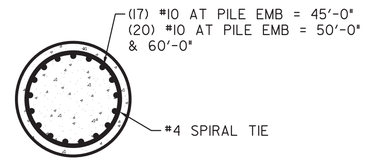

SECTION 1

NOTES

1. SEE ELEVATION DETAILS FOR ALL DIMENSIONS.

PILE FORCES			
CASE	AXIAL (KIPS)	Vr (KIPS)	Mr (KIP-FT)
ASD STATIC	775	15	162
ASD LATERAL	820	50	430
LRFD STATIC	960	19	202
LRFD LATERAL	1040	86	721

NOTE: FORCES OCCUR AT TOP OF PILE, REFER TO GEOTECHNICAL REPORTS FOR LATERAL PILE ANALYSIS.

NOTES

1. ADJUST LENGTH OF SPIRAL CAGE AND PERIMETER REINF IF LOAD TEST OR FIELD CONDITIONS REQUIRE LONGER PILE. NOTIFY SEOR.
2. LAP SPLICES OF LONGITUDINAL REINF ARE ONLY PERMITTED W/I THE CENTER HALF OF MEMBER LENGTH AND OUTSIDE 'lo'.

TYPICAL CAST-IN-DRILLED HOLE PILE DETAIL (A / VAR)
SCALE: 1/2" = 1'-0"

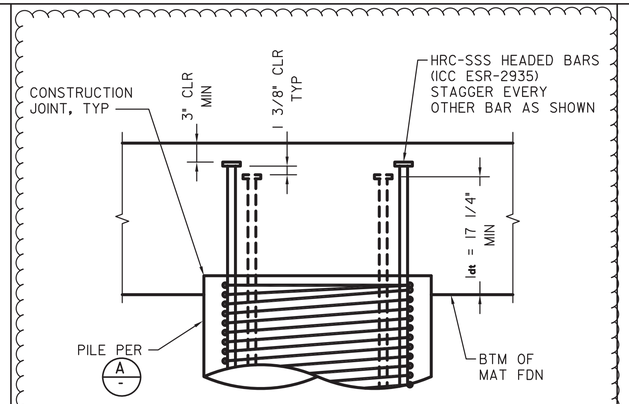

ALTERNATIVE HEADED REINFORCING AT PILES (B / S-30)
SCALE: 1" = 1'-0"

S-30

CENTRAL AREA SMALL-SCALE FACILITY
STRUCTURAL
AREA 7 PURE WATER FACILITY
AREA 8 CHEMICAL FACILITY
PILE TABLE/DETAILS

CITY OF SAN DIEGO, CALIFORNIA
ENGINEERING AND CAPITAL PROJECTS DEPARTMENT
SHEET 65 OF 264 SHEETS

WBS B-21151

CONSULTANT: Stantec, Brown AND Caldwell, Trussell TECHNOLOGIES INC, MARTIN & LIBBY STRUCTURAL ENGINEERS

REGISTERED PROFESSIONAL ENGINEER JEAN M. LIBBY No. 38412 Exp. 03-31-23 CIVIL STATE OF CALIFORNIA 12/27/22

APPROVED: FOR CITY ENGINEER ALICE ALTES, PRINT DCE NAME, RCE# C68286, DATE 10/13/2022

SUBMITTED BY: JOSEPH QUICHO, PROJECT MANAGER
CHECKED BY: MICHAEL VIOLANTE, PROJECT ENGINEER

DESCRIPTION	BY	APPROVED	DATE	FILMED
ORIGINAL	M&L		10/22	
C ADDENDUM C	M&L		12/22	

CONTRACTOR
INSPECTOR
NTP DATE
NOC DATE

CCS27 COORDINATE: 186-1692
CCS83 COORDINATE: 1826444-6250407
DRAWING NO. 0100179-65-D
S30

C ADD & REVISE NOTES & ADD ALTERNATIVE DETAIL.

ADDENDUM C

AREA 7 PURE WATER FACILITY AREA 8 CHEMICAL FACILITY PILE TABLE/DETAILS

EQUIPMENT ANCHORAGE AND PAD SCHEDULE[1]

EQUIPMENT						ANCHOR LAYOUT[2,3]						ANCHORS[4,5]	EQUIPMENT PAD[8]	EQUIPMENT PAD EPOXY DOWELS	DETAILS
ID	WEIGHT (LB UON)	WIDTH	LENGTH	DIAMETER	HEIGHT	TYPE	TOTAL ANCHOR POINTS ALONG WIDTH	TOTAL ANCHOR POINTS ALONG LENGTH	'E'	'C'	'S'				
7-1	1500	4'-3"	7'-2"	N/A	5'-4"	1	N/A	N/A	4" MIN	-	-	(4) 5/8"ø HILTI KB-TZ2 A304 SS EMB = 3 1/4" MIN	5'-0" x 6'-8" W/ #4 AT 24" OC, EW	#4 DOWELS AT 24" OC, EW EMBED 5" MIN	2/S-13
7-2	1500	4'-3"	7'-2"	N/A	5'-4"	1	N/A	N/A	4" MIN	-	-	(4) 5/8"ø HILTI KB-TZ2 A304 SS EMB = 3 1/4" MIN	COMBINED PAD WITH 7-1	COMBINED PAD WITH 7-1	2/S-13
7-3	13000	18'-0"	8'-2"	N/A	8'-0"	2A	3 ANCHOR POINTS	-	6" MIN	6"	±8'-6"	(1) 3/4"ø A304 HAS-R ATR W/HILTI HIT-HY 200 EPOXY EMB = 8" MIN INTO (E) MAT	19'-0" x 9'-0" W/ #4 AT 24" OC, EW	#4 DOWELS AT 24" OC, EW EMBED 5" MIN	1/S-13 & 2/S-13
7-4	5000	18'-0"	2'-0"	N/A	6'-6"	2A	3 ANCHOR POINTS	-	8" MIN	6"	±8'-6"	(1) 3/4"ø A304 HAS-R ATR W/HILTI HIT-HY 200 EPOXY EMB = 10" MIN INTO (E) MAT	19'-4" x 4'-0" W/ #4 AT 24" OC, EW	#4 DOWELS AT 24" OC, EW EMBED 5" MIN	1/S-13 & 2/S-13
7-5	5000	18'-0"	2'-0"	N/A	6'-6"	2A	3 ANCHOR POINTS	-	8" MIN	6"	±8'-6"	(1) 3/4"ø A304 HAS-R ATR W/HILTI HIT-HY 200 EPOXY EMB = 10" MIN INTO (E) MAT	19'-4" x 4'-0" W/ #4 AT 24" OC, EW	#4 DOWELS AT 24" OC, EW EMBED 5" MIN	1/S-13 & 2/S-13
7-6	12000	20'-0"	8'-0"	N/A	8'-6"	2A	3 ANCHOR POINTS	-	8" MIN	6"	±9'-6"	(1) 3/4"ø A304 HAS-R ATR W/HILTI HIT-HY 200 EPOXY EMB = 10" MIN INTO (E) MAT	21'-4" x 10-0" W/ #4 AT 24" OC, EW	#4 DOWELS AT 24" OC, EW EMBED 5" MIN	1/S-13 & 2/S-13
7-7	(2) 400 LB PUMP SKIDS	4'-3" PER SKID	3'-0" PER SKID	N/A	4'-2" PER SKID	1	N/A	N/A	4" MIN	-	-	(4) 5/8"ø HILTI KB-TZ2 A304 SS EMB = 3 1/4" MIN, PER SKID	9'-6" x 4'-0" W/ #4 AT 24" OC, EW, FOR BOTH PUMP SKIDS	#4 DOWELS AT 24" OC, EW EMBED 5" MIN	2/S-13
7-8	300	8'-3"	3'-0"	N/A	3'-10"	1	N/A	N/A	4" MIN	-	-	(4) 5/8"ø HILTI KB-TZ2 A304 SS EMB = 3 1/4" MIN	9'-6" x 4'-0" W/ #4 AT 24" OC, EW	#4 DOWELS AT 24" OC, EW EMBED 5" MIN	2/S-13
7-9	200	3'-0"	4'-0"	N/A	3'-0"	1	N/A	N/A	4" MIN	-	-	(4) 5/8"ø HILTI KB-TZ2 A304 SS EMB = 3 1/4" MIN	COMBINED PAD PER PLAN	COMBINED PAD PER PLAN	2/S-13
7-10	700	N/A	N/A	2'-0"	3'-0"	SEE A/S-39 SIM FOR ANCHORAGE			6" MIN			SEE A/S-39	4'-4" x 4'-4" W/ #4 AT 24" OC, EW	#4 DOWELS AT 24" OC, EW EMBED 5" MIN	2/S-13
7-11	6000	N/A	N/A	4'-0"	6'-6"	SEE C/S-18 SIM FOR ANCHORAGE			1'-0" MIN			SEE C/S-18 (9)	OCTAGONAL PAD, L = 6'-8" W/ #4 AT 24" OC, EW	#4 DOWELS AT 24" OC, EW EMBED 5" MIN	2/S-13
7-12	3500	N/A	N/A	4'-0"	6'-0"	SEE C/S-18 SIM FOR ANCHORAGE			1'-0" MIN			SEE C/S-18 (9)	COMBINED PAD PER PLAN	COMBINED PAD PER PLAN	2/S-13
7-13	10000	13'-2"	4'-6"	N/A	6'-6"	2B	3 ANCHOR POINTS	-	8" MIN	6"	±9'-6"	(2) 3/4"ø A304 HAS-R ATR W/HILTI HIT-HY 200 EPOXY EMB = 8" MIN INTO (E) MAT	14'-6" x 6'-4" W/ #4 AT 24" OC, EW	#4 DOWELS AT 24" OC, EW EMBED 5" MIN	1/S-13 & 2/S-13
7-14	50	1'-0"	1'-0"	N/A	2'-0"	1	N/A	N/A	4" MIN	-	-	(4) 5/8"ø HILTI KB-TZ2 A304 SS EMB = 3 1/4" MIN	4'-0" x 2'-0" W/ #4 AT 24" OC, EW	#4 DOWELS AT 24" OC, EW EMBED 5" MIN	2/S-13
7-15	50	1'-0"	1'-0"	N/A	2'-0"	1	N/A	N/A	4" MIN	-	-	(4) 5/8"ø HILTI KB-TZ2 A304 SS EMB = 3 1/4" MIN	COMBINED PAD WITH 7-14	COMBINED PAD WITH 7-14	2/S-13
7-16	50	1'-0"	1'-0"	N/A	2'-0"	1	N/A	N/A	4" MIN	-	-	(4) 5/8"ø HILTI KB-TZ2 A304 SS EMB = 3 1/4" MIN	COMBINED PAD WITH 7-14	COMBINED PAD WITH 7-14	2/S-13
7-17	400	N/A	N/A	2'-0"	3'-0"	SEE A/S-39 SIM FOR ANCHORAGE			6" MIN			SEE A/S-39	HEXAGONAL PAD, L = 6'-6" W/ #4 AT 24" OC, EW	#4 DOWELS AT 24" OC, EW EMBED 5" MIN	2/S-13
7-18	11000	N/A	N/A	6'-0"	6'-9"	SEE B/S-18 SIM FOR ANCHORAGE			1'-0" MIN			SEE B/S-18 (9)	OCTAGONAL PAD, L = 8'-8" W/ #4 AT 24" OC, EW	#4 DOWELS AT 24" OC, EW EMBED 5" MIN	2/S-13
7-19	75	2'-0"	1'-0"	N/A	1'-0"	1	N/A	N/A	4" MIN	-	-	(4) 5/8"ø HILTI KB-TZ2 A304 SS EMB = 3 1/4" MIN	3'-0" x 4'-6" W/ #4 AT 24" OC, EW	#4 DOWELS AT 24" OC, EW EMBED 5" MIN	2/S-13
7-20	75	2'-0"	1'-0"	N/A	1'-0"	1	N/A	N/A	4" MIN	-	-	(4) 5/8"ø HILTI KB-TZ2 A304 SS EMB = 3 1/4" MIN	COMBINED PAD WITH 7-19	COMBINED PAD WITH 7-19	2/S-13

FOOTNOTES:

(1) ANCHORAGE AND EQUIPMENT PAD INFORMATION IS BASED ON EQUIPMENT INFORMATION PROVIDED TO M&L AT THE TIME OF DESIGN. CONTRACTOR SHALL SUBMIT FINAL EQUIPMENT INFORMATION TO M&L FOR APPROVAL PRIOR TO CONSTRUCTION. CONTRACTOR TO COORDINATE PAD LOCATIONS W/APPROVED EQUIPMENT ANCHORAGE SUBMITTALS.

(2) NUMBER OF ANCHOR POINTS NOTED SHALL BE PROVIDED ON EACH SIDE OF EACH PIECE OF EQUIPMENT, EITHER ALONG WIDTH OR LENGTH AS NOTED.

(3) FOR TYPE 1 ANCHORAGE THE TOTAL NUMBER OF ANCHORS PER PIECE OF EQUIPMENT IS PROVIDED. FOR ALL OTHER TYPES OF ANCHORAGE THE NUMBER OF ANCHORS PER ANCHOR POINT/CLIP ARE PROVIDED.

(4) UNLESS OTHERWISE NOTED ANCHOR EMBEDMENT SHALL BEGIN AT TOP OF (N) EQUIPMENT PAD.

(5) EQUIPMENT ANCHORS MAY BE INSTALLED ON 1 1/2" MAXIMUM OF GROUT.

(6) UON PADS SHALL BE CENTERED ON SKIDS. IF NOT SKIDS, CENTER ON EQUIPMENT. SEE MECHANICAL FOR EQUIPMENT LOCATIONS.

(7) UON PAD REINF TO BE SAME SIZE AND SPACING AS EPOXY DOWELS.

(8) SEE A/S-39 FOR 'L' DIMENSION AT OCTAGONAL PADS. HEXAGONAL PADS

C SIMILAR.

(9) ANCHOR EMBEDMENT SHALL BEGIN AT TOP OF (N) MAT FOUNDATION.

EQUIPMENT ANCHORAGE AND PAD SCHEDULE
NO SCALE
A/S-23

CONSULTANT

Stantec
Brown AND Caldwell
Trussell TECHNOLOGIES INC
MARTIN & LIBBY STRUCTURAL ENGINEERS

REGISTERED PROFESSIONAL ENGINEER JEAN M. LIBBY No. 38412 Exp. 03-31-23 CIVIL STATE OF CALIFORNIA
12/27/22

APPROVED: FOR CITY ENGINEER — DATE 10/13/2022
ALICE ALTES — RCE# C68286
PRINT DCE NAME

DESCRIPTION	BY	APPROVED	DATE	FILMED
ORIGINAL	M&L		10/22	
C ADDENDUM C	M&L		12/22	

CONTRACTOR — NTP DATE
INSPECTOR — NOC DATE

S-31

CENTRAL AREA SMALL-SCALE FACILITY
STRUCTURAL
AREA 7 PURE WATER FACILITY
EQUIP ANCHORAGE & PAD SCHEDULE 1

CITY OF SAN DIEGO, CALIFORNIA
ENGINEERING AND CAPITAL PROJECTS DEPARTMENT
SHEET 66 OF 264 SHEETS

WBS B-21151

SUBMITTED BY: JOSEPH QUICHO, PROJECT MANAGER
CHECKED BY: MICHAEL VIOLANTE, PROJECT ENGINEER
186-1692 CCS27 COORDINATE
1826444-6250407 CCS83 COORDINATE
DRAWING NO. 0100179-66-D — S31

AREA 7 PURE WATER FACILITY EQUIP ANCHORAGE & PAD SCHEDULE 1

C REVISED COLUMN HEADER AND NOTE.

ADDENDUM C

FILENAME: CASSF-S-31.DWG

December 29, 2022
Pure Water Program (PWP) Central Area Small Scale Facility

EQUIPMENT ANCHORAGE AND PAD SCHEDULE[1]

EQUIPMENT						ANCHOR LAYOUT[2,3]						ANCHORS[4,5]	EQUIPMENT PAD[8]	EQUIPMENT PAD EPOXY DOWELS	DETAILS
ID	WEIGHT (LB)	WIDTH	LENGTH	DIAMETER	HEIGHT	TYPE	TOTAL ANCHOR POINTS ALONG WIDTH	TOTAL ANCHOR POINTS ALONG LENGTH	'E'	'C'	'S'				
7-21	50	2'-0"	1'-0"	N/A	1'-0"	I	N/A	N/A	4" MIN	-	-	(4) 5/8"ø HILTI KB-TZ2 A304 SS EMB = 3 1/4" MIN	3'-0" x 2'-0" W/ #4 AT 24" OC, EW	#4 DOWELS AT 24" OC, EW EMBED 5" MIN	2/S-13
7-22	3000	N/A	N/A	4'-0"	6'-0"	SEE C/S-18 SIM FOR ANCHORAGE			1'-0" MIN			SEE C/S-18 (9)	OCTAGONAL PAD, L = 6'-8" W/ #4 AT 24" OC, EW	#4 DOWELS AT 24" OC, EW EMBED 5" MIN	2/S-13
7-23	75	1'-0"	2'-0"	N/A	1'-0"	I	N/A	N/A	4" MIN	-	-	(4) 5/8"ø HILTI KB-TZ2 A304 SS EMB = 3 1/4" MIN	COMBINED PAD PER PLAN	COMBINED PAD PER PLAN	2/S-13
7-24	50	1'-6"	1'-0"	N/A	1'-0"	I	N/A	N/A	4" MIN	-	-	(4) 5/8"ø HILTI KB-TZ2 A304 SS EMB = 3 1/4" MIN	COMBINED PAD PER PLAN	COMBINED PAD PER PLAN	2/S-13
7-25	75	1'-0"	2'-0"	N/A	1'-0"	I	N/A	N/A	4" MIN	-	-	(4) 5/8"ø HILTI KB-TZ2 A304 SS EMB = 3 1/4" MIN	COMBINED PAD PER PLAN	COMBINED PAD PER PLAN	2/S-13
7-26	50	1'-6"	1'-0"	N/A	1'-0"	I	N/A	N/A	4" MIN	-	-	(4) 5/8"ø HILTI KB-TZ2 A304 SS EMB = 3 1/4" MIN	COMBINED PAD PER PLAN	COMBINED PAD PER PLAN	2/S-13
7-27	50	1'-6"	1'-0"	N/A	1'-0"	I	N/A	N/A	4" MIN	-	-	(4) 5/8"ø HILTI KB-TZ2 A304 SS EMB = 3 1/4" MIN	COMBINED PAD PER PLAN	COMBINED PAD PER PLAN	2/S-13
7-28	7500	N/A	N/A	6'-0"	5'-4"	SEE C/S-18 SIM FOR ANCHORAGE			1'-0" MIN			SEE C/S-18 (9)	COMBINED PAD PER PLAN	COMBINED PAD PER PLAN	2/S-13
7-29	17500	N/A	N/A	7'-6"	8'-6"	SEE B/S-18 SIM FOR ANCHORAGE			1'-0" MIN			SEE B/S-18 (9)	COMBINED PAD PER PLAN	COMBINED PAD PER PLAN	2/S-13
7-30	16000	30'-0"	10'-0"	N/A	10'-0"	2B	4 ANCHOR POINTS	-	8" MIN	12"	±9'-4"	(2) 3/4"ø A304 HAS-R ATR W/HILTI HIT-HY 200 EPOXY EMB = 10" MIN INTO (E) MAT	31'-6" x 12-0" W/ #4 AT 24" OC, EW	#4 DOWELS AT 24" OC, EW EMBED 5" MIN	1/S-13 & 2/S-13
7-31	600	3'-0"	3'-0"	N/A	5'-0"	I	N/A	N/A	4" MIN	-	-	(4) 5/8"ø HILTI KB-TZ2 A304 SS EMB = 3 1/4" MIN	3'-8" x 3-8" W/ #4 AT 24" OC, EW	#4 DOWELS AT 24" OC, EW EMBED 5" MIN	2/S-13
7-32	2000	3'-3"	4'-3"	N/A	5'-0"	2A	-	2 ANCHOR POINTS	5" MIN	6"	±3'-3"	(1) 5/8"ø HILTI KB-TZ2 A304 SS EMB = 3 1/4" MIN	4'-8" x 5'-3" W/ #4 AT 24" OC, EW	#4 DOWELS AT 24" OC, EW EMBED 5" MIN	1/S-13 & 2/S-13
7-33	43000	N/A	N/A	8'-6"	12'-9"	SEE A/S-18 SIM FOR ANCHORAGE						(24) 1 1/4"ø A304 HAS-R ATR W/HILTI HIT-RE 500 V3 EPOXY EMB = 12" MIN INTO (N) MAT	OCTAGONAL PAD, L = 11'-0" W/ #5 AT 12" OC, EW	#4 DOWELS AT 12" OC, EW EMBED 6" MIN	2/S-13
7-34	500	3'-0"	4'-0"	N/A	2'-6"	2A	-	2 ANCHOR POINTS	5" MIN	6"	±3'-0"	(1) 5/8"ø HILTI KB-TZ2 A304 SS EMB = 3 1/4" MIN	COMBINED PAD PER PLAN	COMBINED PAD PER PLAN	1/S-13 & 2/S-13
7-35	200B	2'-6"	1'-0"	N/A	1'-6"	I	N/A	N/A	4" MIN	-	-	(4) 5/8"ø HILTI KB-TZ2 A304 SS EMB = 3 1/4" MIN	3'-0" x 3'-0" W/ #4 AT 24" OC, EW	#4 DOWELS AT 24" OC, EW EMBED 5" MIN	2/S-13
7-36	10000	26'-0"	5'-0"	N/A	3'-0"	2B	3 ANCHOR POINTS	-	8" MIN	6"	±9'-6"	(2) 3/4"ø A304 HAS-R ATR W/HILTI HIT-HY 200 EPOXY EMB = 8" MIN INTO (E) MAT	14'-6" x 6'-4" W/ #4 AT 24" OC, EW	#4 DOWELS AT 24" OC, EW EMBED 5" MIN	1/S-13 & 2/S-13
7-37	7500	N/A	N/A	6'-0"	5'-4"	SEE C/S-18 SIM FOR ANCHORAGE			1'-0" MIN			SEE C/S-18 (9)	OCTAGONAL PAD, L = 8'-8" W/ #4 AT 24" OC, EW	#4 DOWELS AT 24" OC, EW EMBED 5" MIN	2/S-13
7-38	150	1'-0"	2'-0"	N/A	1'-0"	I	N/A	N/A	4" MIN	-	-	(4) 5/8"ø HILTI KB-TZ2 A304 SS EMB = 3 1/4" MIN	COMBINED PAD WITH 7-37	COMBINED PAD WITH 7-37	2/S-13
7-39	13000	N/A	N/A	7'-6"	6'-9"	SEE B/S-18 SIM FOR ANCHORAGE			1'-0" MIN			SEE B/S-18 (9)	COMBINED PAD PER PLAN	COMBINED PAD PER PLAN	2/S-13
7-40	150	2'-0"	1'-0"	N/A	1'-6"	I	N/A	N/A	4" MIN	-	-	(4) 5/8"ø HILTI KB-TZ2 A304 SS EMB = 3 1/4" MIN	COMBINED PAD PER PLAN	COMBINED PAD PER PLAN	2/S-13

FOOTNOTES:

(1) ANCHORAGE AND EQUIPMENT PAD INFORMATION IS BASED ON EQUIPMENT INFORMATION PROVIDED TO M&L AT THE TIME OF DESIGN. CONTRACTOR SHALL SUBMIT FINAL EQUIPMENT INFORMATION TO M&L FOR APPROVAL PRIOR TO CONSTRUCTION. CONTRACTOR TO COORDINATE PAD LOCATIONS W/APPROVED EQUIPMENT ANCHORAGE SUBMITTALS.

(2) NUMBER OF ANCHOR POINTS NOTED SHALL BE PROVIDED ON EACH SIDE OF EACH PIECE OF EQUIPMENT, EITHER ALONG WIDTH OR LENGTH AS NOTED.

(3) FOR TYPE I ANCHORAGE THE TOTAL NUMBER OF ANCHORS PER PIECE OF EQUIPMENT IS PROVIDED. FOR ALL OTHER TYPES OF ANCHORAGE THE NUMBER OF ANCHORS PER ANCHOR POINT/CLIP ARE PROVIDED.

(4) UNLESS OTHERWISE NOTED ANCHOR EMBEDMENT SHALL BEGIN AT TOP OF (N) EQUIPMENT PAD.

(5) EQUIPMENT ANCHORS MAY BE INSTALLED ON 1 1/2" MAXIMUM OF GROUT.

(6) UON PADS SHALL BE CENTERED ON SKIDS. IF NOT SKIDS, CENTER ON EQUIPMENT. SEE MECHANICAL FOR EQUIPMENT LOCATIONS.

(7) UON PAD REINF TO BE SAME SIZE AND SPACING AS EPOXY DOWELS.

(8) SEE A/S-39 FOR 'L' DIMENSION AT C OCTAGONAL PAD.

(9) ANCHOR EMBEDMENT SHALL BEGIN AT TOP OF (N) MAT FOUNDATION.

EQUIPMENT ANCHORAGE AND PAD SCHEDULE
NO SCALE
A/S-23

CONSULTANT

Stantec
Brown AND Caldwell
Trussell TECHNOLOGIES INC
MARTIN & LIBBY STRUCTURAL ENGINEERS

REGISTERED PROFESSIONAL ENGINEER JEAN M. LIBBY No. 38412 Exp. 03-31-23 CIVIL STATE OF CALIFORNIA
12/27/22

DESCRIPTION	BY	APPROVED	DATE	FILMED
ORIGINAL	M&L		10/22	
C ADDENDUM C	M&L		12/22	

CONTRACTOR
INSPECTOR
NTP DATE
NOC DATE

APPROVED: 10/13/2022
FOR CITY ENGINEER — DATE
ALICE ALTES — C68286
PRINT DCE NAME — RCE#

SUBMITTED BY: JOSEPH QUICHO, PROJECT MANAGER
CHECKED BY: MICHAEL VIOLANTE, PROJECT ENGINEER
186-1692 CCS27 COORDINATE
1826444-6250407 CCS83 COORDINATE
DRAWING NO. 0100179-67-D

S-32

CENTRAL AREA SMALL-SCALE FACILITY
STRUCTURAL
AREA 7 PURE WATER FACILITY
EQUIP ANCHORAGE & PAD SCHEDULE 2

CITY OF SAN DIEGO, CALIFORNIA
ENGINEERING AND CAPITAL PROJECTS DEPARTMENT
SHEET 67 OF 264 SHEETS

WBS B-21151

AREA 7 PURE WATER FACILITY EQUIP ANCHORAGE & PAD SCHEDULE 2

C REVISED COLUMN HEADER AND NOTE FOR OCTAGONAL PAD.

ADDENDUM C

FILENAME: CASSF-S-32.DWG

December 29, 2022
Pure Water Program (PWP) Central Area Small Scale Facility

EQUIPMENT ANCHORAGE AND PAD SCHEDULE[1]

EQUIPMENT						ANCHOR LAYOUT[2,3]						ANCHORS[4,5]	EQUIPMENT PAD[8]	EQUIPMENT PAD EPOXY DOWELS	DETAILS
ID	WEIGHT (LB)	WIDTH	LENGTH	DIAMETER	HEIGHT	TYPE	TOTAL ANCHOR POINTS ALONG WIDTH	TOTAL ANCHOR POINTS ALONG LENGTH	'E'	'C'	'S'				
7-41	25500	11'-0"	11'-0"	N/A	24'-0"	2B	3 ANCHOR POINTS	3 ANCHOR POINTS	12" MIN	24"	±3'-6"	(2) 3/4"ø A304 HAS-R ATR W/HILTI HIT-HY 200 EPOXY EMB = 10" MIN INTO (E) MAT	13'-6" x 15-6" W/ #4 AT 12" OC, EW	#4 DOWELS AT 12" OC, EW EMBED 5" MIN	1/S-13 & 2/S-13
7-42	800	6'-0"	1'-0"	N/A	3'-0"	1	N/A	N/A	4" MIN	-	-	(4) 5/8"ø HILTI KB-TZ2 A304 SS EMB = 3 1/4" MIN	COMBINED PAD WITH 7-41	COMBINED PAD WITH 7-41	2/S-13
7-43	800	6'-0"	1'-0"	N/A	3'-0"	1	N/A	N/A	4" MIN	-	-	(4) 5/8"ø HILTI KB-TZ2 A304 SS EMB = 3 1/4" MIN	COMBINED PAD PER PLAN	COMBINED PAD PER PLAN	2/S-13
7-44	800	6'-0"	1'-0"	N/A	3'-0"	1	N/A	N/A	4" MIN	-	-	(4) 5/8"ø HILTI KB-TZ2 A304 SS EMB = 3 1/4" MIN	COMBINED PAD WITH 7-41	COMBINED PAD WITH 7-41	2/S-13
7-45	800	1'-0"	6'-0"	N/A	3'-0"	1	N/A	N/A	4" MIN	-	-	(4) 5/8"ø HILTI KB-TZ2 A304 SS EMB = 3 1/4" MIN	COMBINED PAD WITH 7-36	COMBINED PAD WITH 7-36	2/S-13
7-46	800	1'-0"	6'-0"	N/A	3'-0"	1	N/A	N/A	4" MIN	-	-	(4) 5/8"ø HILTI KB-TZ2 A304 SS EMB = 3 1/4" MIN	COMBINED PAD WITH 7-36	COMBINED PAD WITH 7-36	2/S-13
7-47	800	1'-0"	6'-0"	N/A	3'-0"	1	N/A	N/A	4" MIN	-	-	(4) 5/8"ø HILTI KB-TZ2 A304 SS EMB = 3 1/4" MIN	2'-0" x 7-0" W/ #4 AT 24" OC, EW	#4 DOWELS AT 24" OC, EW EMBED 5" MIN	2/S-13
7-48	1100	2'-9"	4'-0"	N/A	6'-0"	1	N/A	N/A	4" MIN	-	-	(4) 5/8"ø HILTI KB-TZ2 A304 SS EMB = 3 1/4" MIN	3'-9" x 5-0" W/ #4 AT 24" OC, EW	#4 DOWELS AT 24" OC, EW EMBED 5" MIN	2/S-13
7-49	150	1'-0"	1'-6"	N/A	3'-0"	1	N/A	N/A	4" MIN	-	-	(4) 5/8"ø HILTI KB-TZ2 A304 SS EMB = 3 1/4" MIN	1'-8" x 2-6" W/ 4 AT 24" OC, EW	#4 DOWELS AT 24" OC, EW EMBED 5" MIN	2/S-13

FOOTNOTES:

(1) ANCHORAGE AND EQUIPMENT PAD INFORMATION IS BASED EQUIPMENT INFORMATION PROVIDED TO M&L AT THE TIME OF DESIGN. CONTRACTOR SHALL SUBMIT FINAL EQUIPMENT INFORMATION TO BE M&L FOR REVIEW PRIOR TO CONSTRUCTION. INFORMATION IS SUBJECT TO CHANGE BASED ON FINAL EQUIPMENT SUBMITTED.
(2) NUMBER OF ANCHOR POINTS NOTED SHALL BE PROVIDED ON EACH SIDE, EITHER ALONG WIDTH OR LENGTH AS NOTED.
(3) FOR TYPE 1 ANCHORAGE THE TOTAL NUMBER OF ANCHORS IS PROVIDED. FOR ALL OTHER TYPES OF ANCHORAGE THE NUMBER OF ANCHORS PER ANCHOR POINT/CLIP ARE PROVIDED.
(4) UNLESS OTHERWISE NOTED ANCHOR EMBEDMENT SHALL BEGIN AT TOP OF (N) EQUIPMENT PAD.
(5) EQUIPMENT ANCHORS MAY BE INSTALLED ON 1 1/2" MAXIMUM OF GROUT.
(6) UON PADS SHALL BE CENTERED ON SKIDS. IF NOT SKIDS, CENTER ON EQUIPMENT. SEE MECHANICAL FOR EQUIPMENT LOCATIONS.
(7) UON PAD REINF TO BE SAME SIZE AND SPACING AS EPOXY DOWELS.
(8) SEE A/S-39 FOR 'L' DIMENSION AT C OCTAGONAL PAD.

EQUIPMENT ANCHORAGE AND PAD SCHEDULE
NO SCALE
A/S-23

C REVISED COLUMN HEADER AND NOTE FOR OCTAGONAL PAD.

ADDENDUM C

S-33

CENTRAL AREA SMALL-SCALE FACILITY
STRUCTURAL
AREA 7 PURE WATER FACILITY
EQUIP ANCHORAGE & PAD SCHEDULE 3

CITY OF SAN DIEGO, CALIFORNIA
ENGINEERING AND CAPITAL PROJECTS DEPARTMENT
SHEET 68 OF 264 SHEETS

WBS B-21151

CONSULTANT: Stantec, Brown AND Caldwell, Trussell TECHNOLOGIES INC, MARTIN & LIBBY STRUCTURAL ENGINEERS

REGISTERED PROFESSIONAL ENGINEER JEAN M. LIBBY No. 38412 Exp. 03-31-23 CIVIL STATE OF CALIFORNIA
12/27/22

APPROVED: FOR CITY ENGINEER ALICE ALTES, PRINT DCE NAME — DATE 10/13/2022 — RCE# C68286

SUBMITTED BY: JOSEPH QUICHO, PROJECT MANAGER
CHECKED BY: MICHAEL VIOLANTE, PROJECT ENGINEER

DESCRIPTION	BY	APPROVED	DATE	FILMED
ORIGINAL	M&L		10/22	
C ADDENDUM C	M&L		12/22	

186-1692 CCS27 COORDINATE
1826444-6250407 CCS83 COORDINATE
DRAWING NO. 0100179-68-D — S33

CONTRACTOR ____ NTP DATE ____
INSPECTOR ____ NOC DATE ____

AREA 7 PURE WATER FACILITY EQUIP ANCHORAGE & PAD SCHEDULE 3

FILENAME: CASSF-S-33.DWG

December 29, 2022
Pure Water Program (PWP) Central Area Small Scale Facility

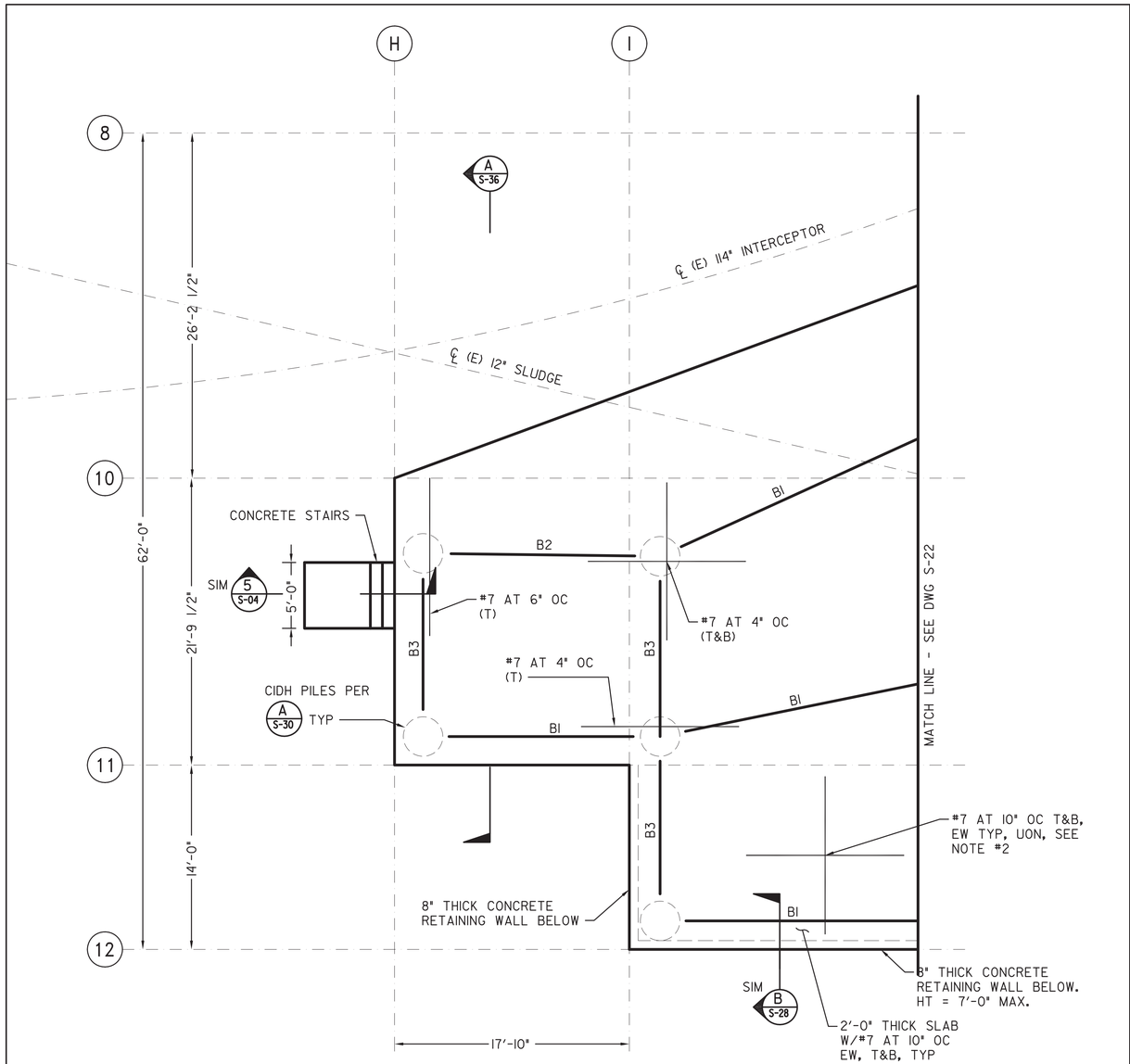

NOTES:
1. DEMOLISH (E) SLAB IN THIS AREA.
2. ALL INCREASED SLAB REINF AT PILES SHALL EXTEND 13'-0" MIN BEYOND FACE OF PILE, UON. SEE 4/S-28. LAP W/#7 @ 10" O.C. TYP REINF. NONCONTACT LAP SPLICE IS ACCEPTABLE.

SLAB REINF PLAN 1/S-07
SCALE: 3/16" = 1'-0"

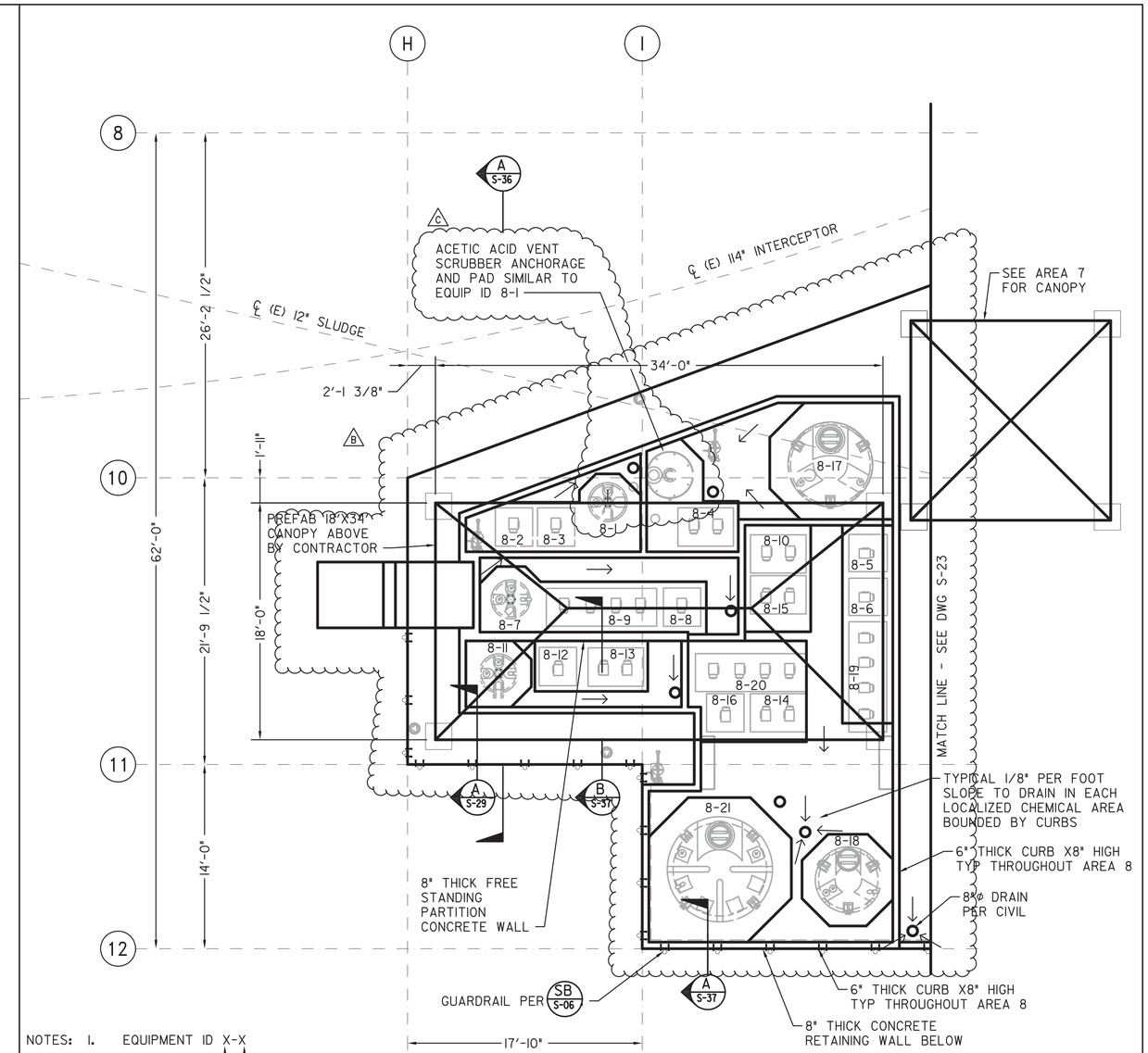

NOTES:
1. EQUIPMENT ID X-X
   - EQUIPMENT NO
   - AREA ID

   REFER TO EQUIPMENT SCHEDULE A/S-38 FOR EQUIPMENT INFORMATION AND ANCHORAGE.
2. U.O.N. MECHANICAL EQUIP TO BE CENTERED ON PAD. SEE MECHANICAL DRAWINGS FOR LOCATION OF EQUP.
3. SEE B/S-36 AND B/S-38 FOR CANOPY ANCHORAGE.

EQUIPMENT & CANOPY PLAN 2/S-07
SCALE: 3/16" = 1'-0"

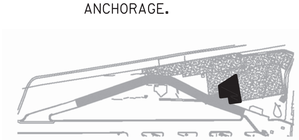

KEY MAP

S-35

CENTRAL AREA SMALL-SCALE FACILITY
STRUCTURAL
AREA 8 CHEMICAL FACILITY
SLAB REINF, EQUIP & CANOPY PLANS

CITY OF SAN DIEGO, CALIFORNIA
ENGINEERING AND CAPITAL PROJECTS DEPARTMENT
SHEET 70 OF 264 SHEETS

WBS B-21151

CONSULTANT: Stantec; Brown AND Caldwell; Trussell TECHNOLOGIES INC; MARTIN & LIBBY STRUCTURAL ENGINEERS

REGISTERED PROFESSIONAL ENGINEER JEAN M. LIBBY No. 38412 Exp. 03-31-23 CIVIL STATE OF CALIFORNIA 12/27/22

APPROVED: FOR/CITY ENGINEER ALICE ALTES PRINT DCE NAME — DATE 10/13/2022 — RCE# C68286

SUBMITTED BY: JOSEPH QUICHO, PROJECT MANAGER
CHECKED BY: MICHAEL VIOLANTE, PROJECT ENGINEER

DESCRIPTION	BY	APPROVED	DATE	FILMED
ORIGINAL	M&L		10/22	
B ADDENDUM B	M&L		12/22	
C ADDENDUM C	M&L		12/22	

186-1692 CCS27 COORDINATE
1826444-6250407 CCS83 COORDINATE

DRAWING NO. 0100179-70-D S35

CONTRACTOR
INSPECTOR
NTP DATE
NOC DATE

C REVISED EQUIPMENT PADS.
B MOVED REFERENCE FILES BACK INTO CORRECT POSITION.

ADDENDUM C

AREA 8 CHEMICAL FACILITY SLAB REINF, EQUIP & CANOPY PLANS

FILENAME: CASSF-S-35.DWG

December 29, 2022
Pure Water Program (PWP) Central Area Small Scale Facility

EQUIPMENT ANCHORAGE AND PAD SCHEDULE[1]

EQUIPMENT						ANCHOR LAYOUT[2]						ANCHORS[3,4,5]	EQUIPMENT PAD[8] (WXL)	EQUIPMENT PAD EPOXY DOWELS	DETAILS
ID	WEIGHT (LB)	WIDTH N-S	LENGTH E-W	DIAMETER	HEIGHT	TYPE	TOTAL ANCHOR POINTS ALONG WIDTH	TOTAL ANCHOR POINTS ALONG LENGTH	'E'	'C'	'S'				
8-1	105	-	-	3'-0"	4'-0"	SEE B/S-39 FOR ANCHORAGE			6" MIN	-	-	(3) 5/8"ø HILTI KB-TZ2 A304 SS EMBED = 4"	OCTAGONAL PAD L = 4'-6" W/ #4 @ 16" OC EW	#4 DOWELS AT 24" OC, EW EMBED 5" MIN	2/S-13
8-2	150	2'-7"	2'-10"	-	3'-0"	1	-	2 ANCHOR POINTS	6" MIN	-	-	(4) 5/8"ø HILTI KB-TZ2 A304 SS EMB = 3 1/4" MIN	7'-2"X3'-10"	#4 DOWELS AT 24" OC, EW EMBED 5" MIN	2/S-13
8-3	150	2'-7"	2'-10"	-	3'-0"	1	-	2 ANCHOR POINTS	6" MIN	-	-	(4) 5/8"ø HILTI KB-TZ2 A304 SS EMB = 3 1/4" MIN	COMBINED EQUIPMENT PAD WITH 8-2		2/S-13
8-4	250	4'-0"	2'-10"	-	3'-0"	1	-	2 ANCHOR POINTS	6" MIN	-	-	(4) 5/8"ø HILTI KB-TZ2 A304 SS EMB = 3 1/4" MIN	5'-0"X3'-10"	#4 DOWELS AT 24" OC, EW EMBED = 5" MIN	2/S-13
8-5	150	2'-10"	2'-7"	-	3'-0"	1	-	2 ANCHOR POINTS	6" MIN	-	-	(4) 5/8"ø HILTI KB-TZ2 A304 SS EMB = 3 1/4" MIN	3'-10"X15'-6"	#4 DOWELS AT 24" OC, EW EMBED = 5" MIN	2/S-13
8-6	150	2'-10"	2'-7"	-	3'-0"	1	-	2 ANCHOR POINTS	6" MIN	-	-	(4) 5/8"ø HILTI KB-TZ2 A304 SS EMB = 3 1/4" MIN	COMBINED EQUIPMENT PAD WITH 8-5		2/S-13
8-7	160	-	-	3'-0"	5'-3"	SEE B/S-39 FOR ANCHORAGE			6" MIN	-	-	(3) 5/8"ø HILTI KB-TZ2 A304 SS EMBED = 4"	OCTAGONAL PAD L = 4'-6" W/ #4 @ 16" OC EW	#4 DOWELS AT 24" OC, EW EMBED 5" = MIN	2/S-13
8-8	150	2'-7"	2'-10"	-	3'-0"	1	-	2 ANCHOR POINTS	6" MIN	-	-	(4) 5/8"ø HILTI KB-TZ2 A304 SS EMB = 3 1/4" MIN	12'-7"X3'-10"	#4 DOWELS AT 24" OC, EW EMBED 5" = MIN	2/S-13
8-9	550	8'-0"	2'-10"	-	3'-0"	1	-	2 ANCHOR POINTS	6" MIN	-	-	(4) 5/8"ø HILTI KB-TZ2 A304 SS EMB = 3 1/4" MIN	COMBINED EQUIPMENT PAD WITH 8-8		2/S-13
8-10	250	4'-0"	2'-10"	-	3'-0"	1	-	2 ANCHOR POINTS	6" MIN	-	-	(4) 5/8"ø HILTI KB-TZ2 A304 SS EMB = 3 1/4" MIN	5'-0"X7'-8"	#4 DOWELS AT 24" OC, EW EMBED = 5" MIN	2/S-13
8-11	105	-	-	3'-0"	4'-0"	SEE B/S-39 FOR ANCHORAGE			6" MIN	-	-	(3) 5/8"ø HILTI KB-TZ2 A304 SS EMBED = 4"	OCTAGONAL PAD L = 4'-6" W/ #4 @ 16" OC EW	#4 DOWELS AT 24" OC, EW EMBED = 5" MIN	2/S-13
8-12	150	2'-7"	2'-10"	-	3'-0"	1	-	2 ANCHOR POINTS	6" MIN	-	-	(4) 5/8"ø HILTI KBTZ2 A304 SS EMBED = 3 1/4" MAX	8'-7"X3'-10"	#4 DOWELS AT 24" OC, EW EMBED = 5" MIN	2/S-13
8-13	250	4'-0"	2'-10"	-	3'-0"	1	-	2 ANCHOR POINTS	6" MIN	-	-	(4) 5/8"ø HILTI KB-TZ2 A304 SS EMB = 3 1/4" MIN	COMBINED EQUIPMENT PAD WITH 8-12		2/S-13
8-14	250	4'-0"	2'-10"	-	3'-0"	1	-	2 ANCHOR POINTS	6" MIN	-	-	(4) 5/8"ø HILTI KB-TZ2 A304 SS EMB = 3 1/4" MIN	9'-0"X7'-8"	#4 DOWELS AT 24" OC, EW EMBED = 5" MIN	2/S-13
8-15	250	4'-0"	2'-10"	-	3'-0"	1	-	2 ANCHOR POINTS	6" MIN	-	-	(4) 5/8"ø HILTI KB-TZ2 A304 SS EMB = 3 1/4" MIN	COMBINED EQUIPMENT PAD WITH 8-10		2/S-13
8-16	150	2'-7"	2'-10"	-	3'-0"	1	-	2 ANCHOR POINTS	6" MIN	-	-	(4) 5/8"ø HILTI KB-TZ2 A304 SS EMB = 3 1/4" MIN	COMBINED EQUIPMENT PAD WITH 8-14		2/S-13
8-17	1,015	-	-	6'-6"	7'-0"	SEE A/S-39 FOR ANCHORAGE			6" MIN	-	-	(6) ADHESIVE A.B.[9] 5/8"øX12" EMBED	OCTAGONAL PAD L = 8'-0" W/ #4 @ 12" OC EW	#4 DOWELS AT 24" OC, EW EMBED = 5" MIN	2/S-13
8-18	750	-	-	5'-0"	8'-2"	SEE A/S-39 FOR ANCHORAGE			6" MIN	-	-	(6) ADHESIVE A.B.[9] 5/8"øX12" EMBED	OCTAGONAL PAD L = 6'-6" W/ #4 @ 12" OC EW	#4 DOWELS AT 24" OC, EW EMBED = 5" MIN	2/S-13
8-19	550	2'-10"	8'-0"	-	3'-0"	1	-	2 ANCHOR POINTS	6" MIN	-	-	(4) 5/8"ø HILTI KB-TZ2 A304 SS EMB = 3 1/4" MIN	COMBINED EQUIPMENT PAD WITH 8-5		2/S-13
8-20	550	8'-0"	2'-10"	-	3'-0"	1	-	2 ANCHOR POINTS	6" MIN	-	-	(4) 1/2"ø HILTI KB-TZ2 A304 SS EMB = 3 1/4" MIN	5'-2" x 5'-2" W/ #4 AT 24" OC, EW	#4 DOWELS AT 24" OC, EW EMBED 5" MIN	2/S-13
8-21	1,550	-	-	8'-0"	7'-6"	SEE A/S-39 FOR ANCHORAGE			6" MIN	-	-	(6) ADHESIVE A.B.[9] 5/8"øX12" EMBED	OCTAGONAL PAD L = 9'-6" W/ #4 @ 12" OC EW	#4 DOWELS AT 24" OC, EW EMBED = 5" MIN	2/S-13

FOOTNOTES:

(1) ANCHORAGE AND EQUIPMENT PAD INFORMATION IS BASED ON EQUIPMENT INFORMATION PROVIDED TO M&L AT THE TIME OF DESIGN. CONTRACTOR SHALL SUBMIT FINAL EQUIPMENT INFORMATION TO M&L FOR APPROVAL PRIOR TO CONSTRUCTION. CONTRACTOR TO COORDINATE PAD LOCATIONS W/APPROVED EQUIPMENT ANCHORAGE SUBMITTALS.

(2) NUMBER OF ANCHOR POINTS NOTED SHALL BE PROVIDED ON EACH SIDE OF EACH PIECE OF EQUIPMENT, EITHER ALONG WIDTH OR LENGTH AS NOTED.

(3) FOR TYPE 1 ANCHORAGE THE TOTAL NUMBER OF ANCHORS PER PIECE OF EQUIPMENT IS PROVIDED. FOR ALL OTHER TYPES OF ANCHORAGE THE NUMBER OF ANCHORS PER ANCHOR POINT/CLIP ARE PROVIDED.

(4) UNLESS OTHERWISE NOTED ANCHOR EMBEDMENT SHALL BEGIN AT TOP OF (N) EQUIPMENT PAD.

(5) EQUIPMENT ANCHORS MAY BE INSTALLED ON 1 1/2" MAXIMUM OF GROUT.

(6) UON PADS SHALL BE CENTERED ON SKIDS. IF NO SKIDS, CENTER ON EQUIPMENT. SEE MECHANICAL FOR EQUIPMENT LOCATIONS.

(7) UON PAD REINF TO BE SAME SIZE AND SPACING AS EPOXY DOWELS.

(8) SEE A/S-39 FOR 'L' DIMENSION AT OCTAGONAL PAD. (C)

(9) ANCHOR EMBEDMENT SHALL BEGIN AT TOP OF (N) MAT FOUNDATION.

EQUIPMENT ANCHORAGE AND PAD SCHEDULE
NO SCALE
A/S-11

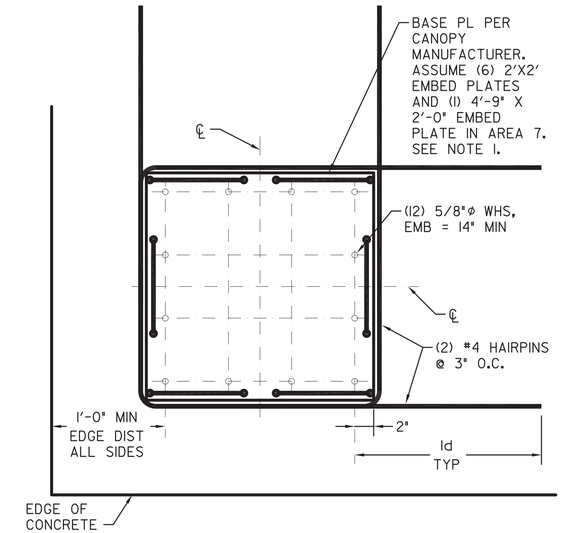

1 1/2" = 1'-0" (X/-)

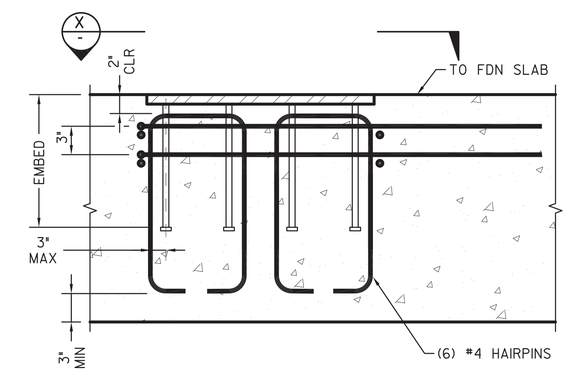

NOTES:
1. DETAIL PROVIDED FOR BIDDING PURPOSES ONLY. UNFACTORED LOADS AT BASE OF CANOPY COLUMNS SHALL BE PROVIDED BY CANOPY MFR. BASEPLATE SHALL BE PROVIDED BY CANOPY MANUFACTURER.
2. FINAL REINF CONFIGURATION TO BE PROVIDED BY S.E.O.R. WHEN LOADS ARE KNOWN.

CANOPY ANCHORAGE @ EDGE OF SLAB
1 1/2" = 1'-0"
B/-

S-38

CENTRAL AREA SMALL-SCALE FACILITY
STRUCTURAL
AREA 8 CHEMICAL FACILITY
EQUIP ANCHORAGE & PAD SCHEDULE

CITY OF SAN DIEGO, CALIFORNIA
ENGINEERING AND CAPITAL PROJECTS DEPARTMENT
SHEET 73 OF 264 SHEETS

WBS B-21151

APPROVED: FOR CITY ENGINEER ALICE ALTES (PRINT DCE NAME) — DATE 10/13/2022 — RCE# C68286

SUBMITTED BY: JOSEPH QUICHO, PROJECT MANAGER
CHECKED BY: MICHAEL VIOLANTE, PROJECT ENGINEER

DESCRIPTION	BY	APPROVED	DATE	FILMED
ORIGINAL	M&L		10/22	
(C) ADDENDUM C	M&L		12/22	

186-1692 CCS27 COORDINATE
1826444-6250407 CCS83 COORDINATE
DRAWING NO. 0100179-73-D — S38

CONTRACTOR
INSPECTOR
NTP DATE
NOC DATE

CONSULTANT: Stantec; Brown AND Caldwell; Trussell TECHNOLOGIES INC; MARTIN & LIBBY STRUCTURAL ENGINEERS

REGISTERED PROFESSIONAL ENGINEER JEAN M. LIBBY No. 38412 Exp. 03-31-23 CIVIL STATE OF CALIFORNIA — 12/27/22

(C) REVISED COLUMN HEADER, EQUIP/DOWEL DETAIL CALLOUTS AND PAD SHAPE.

ADDENDUM C

AREA 8 CHEMICAL FACILITY EQUIP ANCHORAGE & PAD SCHEDULE

FILENAME: CASSF-S-38.DWG

December 29, 2022
Pure Water Program (PWP) Central Area Small Scale Facility

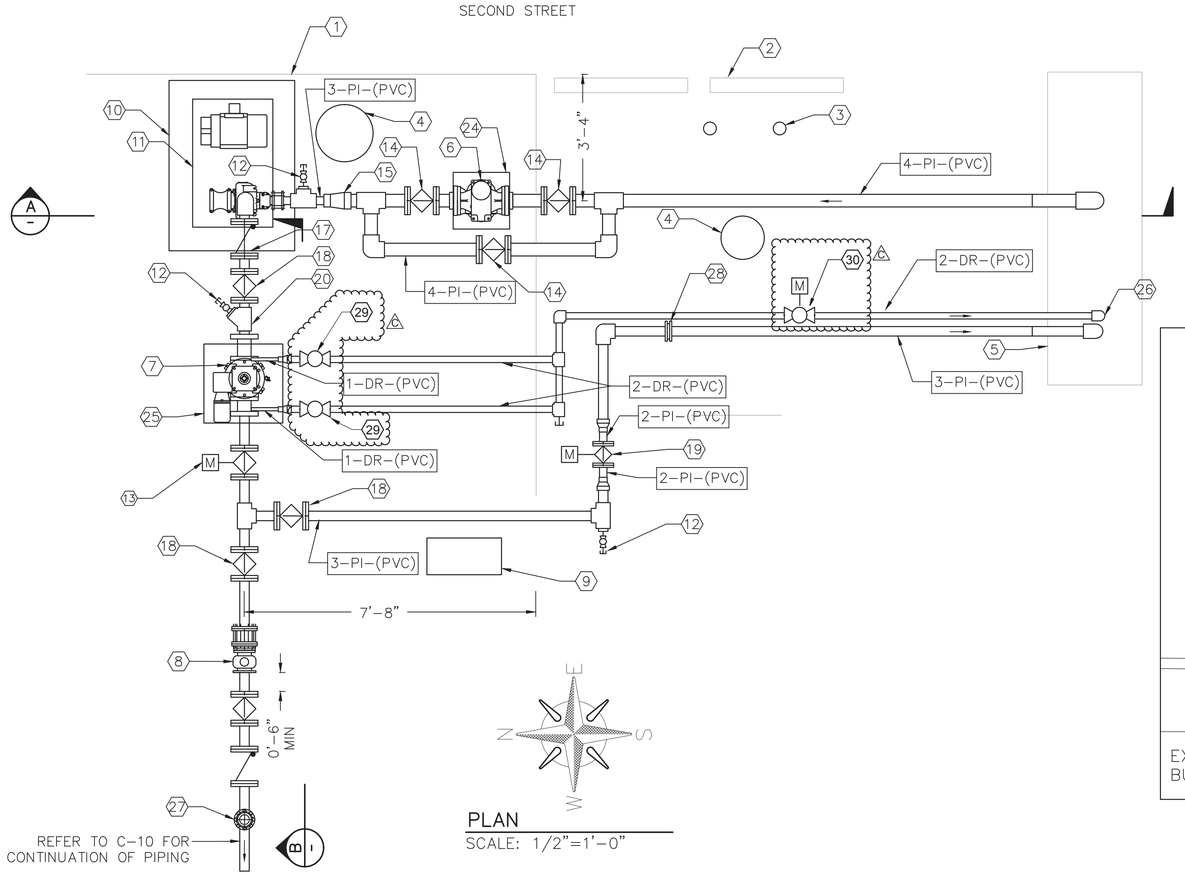

PLAN
SCALE: 1/2"=1'-0"

GENERAL NOTES

1. PENETRATIONS SHALL CORE THROUGH EXISTING CONCRETE LID SEE DET . M1110/M-25
2. ALL PIPING SHALL BE SCH. 80 PVC PER SECTION 40 05 01 UNLESS OTHER NOTED AND COATED PER SECTION 09 90 00
3. PIPING SUPPORTS ARE DEFERRED DESIGN AND SHALL BE BY THE CONTRACTOR'S PIPE SUPPORT DESIGNER PER SECTION 40 05 07. ANY SUPPORTS SHOWN ON DRAWINGS INCLUDING PIPE SUPPORT DETAILS ARE FOR REFERENCE ONLY.

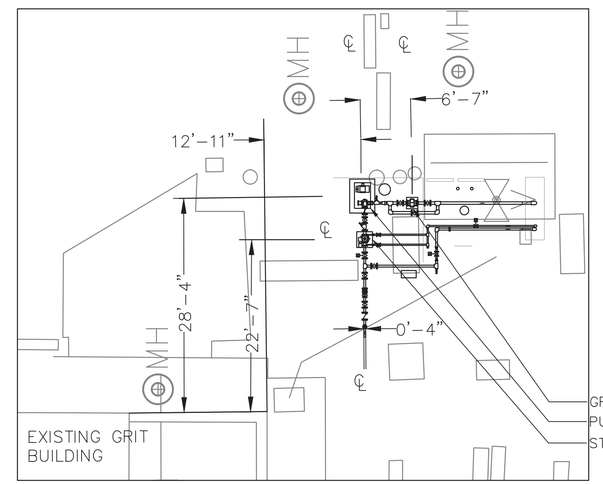

CONCRETE BASE LOCATION PLAN
SCALE: 1'=10'-0"

KEY NOTES

1. EXISTING PAD.
2. EXISTING PARKING CURB.
3. EXISTING BOLLARD.
4. EXISTING PIPE FLANGE.
5. EXISTING CONCRETE LID ABOVE PSB 1 INFLUENT CHANNEL
6. GRINDER ME-300.
7. SELF CLEANING STRAINER STR-330.
8. MAGNETIC FLOW METER FIT-330
9. ELECTRICAL CONTROL PANEL.
10. 3'-4"x4'-6"x8" HIGH CONCRETE EQUIPMENT PAD.
11. PRIMARY INFLUENT SELF-PRIMING PUMP P-310.
12. 1/2" CAM LOCK CAP FOR CLEAN OUT.
13. MOTORIZED PLUG VALVE MOV-331.
14. 4" PLUG VALVE, TYPICAL.VP-300A, VP300B AND VP-300C.
15. 4"x3" PVC ECCENTRIC REDUCER.
16. HARNESS RESTRAINED DISMANTLING JOINT.
17. 3" CHECK VALVE. VC-310 AND VC-330.
18. 18. 3" PLUG VALVE, TYPICAL.VP-310A, VP330A, VP-330B, VP-330C AND VP-330D.
19. 2" FLOW CONTROL VALVE FCV-334.
20. 3" WYE W/ 1/2" CAM-LOCK CONNECTION CAP.
21. PRESSURE GAUGE SEE DET. 2/M-27.
22. TO/FROM BYPASS.
23. 3"BYPASS TO INFLUENT CHANNEL.
24. 1'-6"x1'-6"x10.5" HIGH CONCRETE EQUIPMENT PAD.
25. 2'-1"x2'-1"x1'-9" HIGH CONCRETE EQUIPMENT PAD.
26. PIPE THROUGH CHANNEL PLATE SHALL BE BRACED AND SUPPORTED OUTSIDE OF CHANNEL TO MINIMIZE VIBRATION AND FATIGUE TO PIPING.
27. 2" COMBINATION AIR RELEASE VALVE, SEE DET. M5060/M-27.
28. ORIFICE PLATE SEE DET. 1/M-27.

29	2" BALL VALVE
30	2" MOTORIZED BALL VALVE, MOV-332

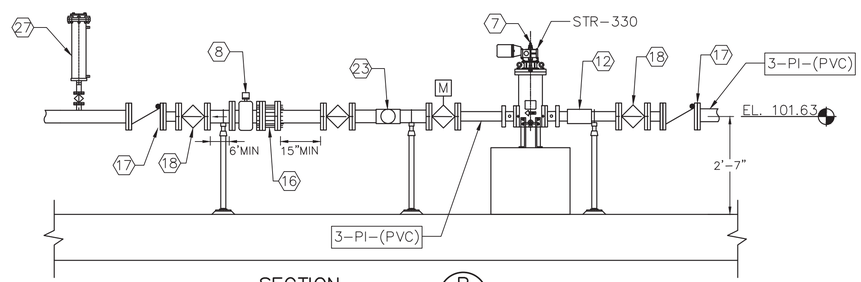

SECTION B
SCALE: 1/2"=1'-0"

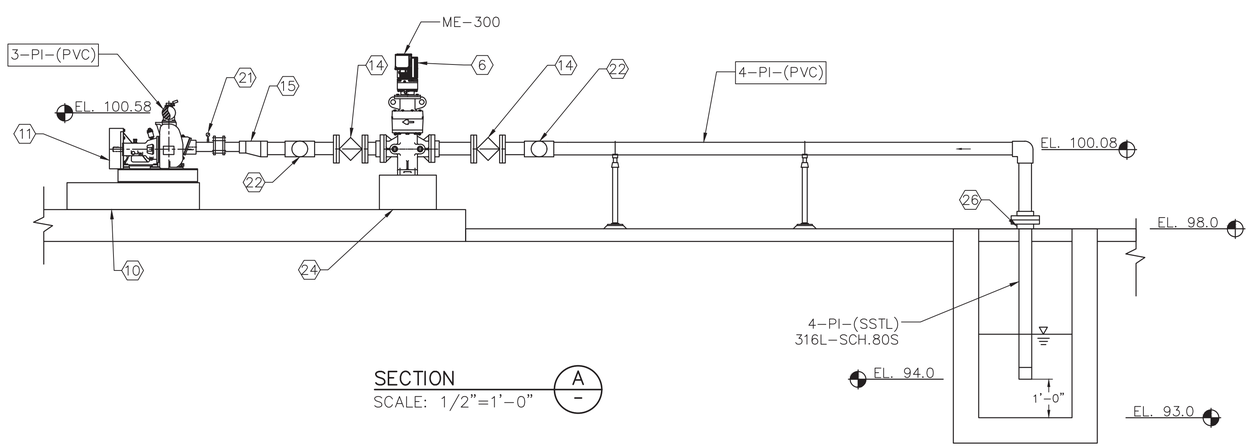

SECTION A
SCALE: 1/2"=1'-0"

SCALE 1/2"=1'-0"

M-03

KEY MAP

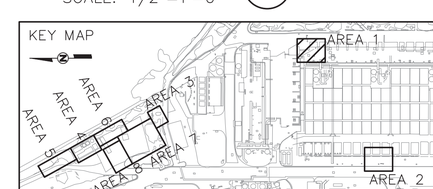

CENTRAL AREA SMALL-SCALE FACILITY
MECHANICAL
AREA 1 PI PUMP STATION PLAN, SECTION AND DETAILS

CITY OF SAN DIEGO, CALIFORNIA
ENGINEERING AND CAPITAL PROJECTS DEPARTMENT
SHEET 77 OF 264 SHEETS

WBS B-21151

CONSULTANT: Stantec; Brown AND Caldwell; Trussell TECHNOLOGIES INC

REGISTERED PROFESSIONAL ENGINEER — No. M34275 EXP. 12-31-22 — MECHANICAL — STATE OF CALIFORNIA — 12/27/22

APPROVED: FOR CITY ENGINEER ALICE ALTES — DATE 10/13/2022 — RCE# C68286

SUBMITTED BY: JOSEPH QUICHO, PROJECT MANAGER
CHECKED BY: MICHAEL VIOLANTE, PROJECT ENGINEER

DESCRIPTION	BY	APPROVED	DATE	FILMED
ORIGINAL	BC		10/22	
6 ADDENDUM C	BC		12/22	

186-1692 CCS27 COORDINATE
1826444-6250407 CCS83 COORDINATE
DRAWING NO. 0100179-77-D — M03

CONTRACTOR
INSPECTOR
NTP DATE
NOC DATE

6 ADDED KEYNOTES AND UPDATED VALVE TYPE

ADDENDUM C

AREA 1 PI PUMP STATION PLAN, SECTION DETAILS

FILENAME: CASSF-M-03.DWG

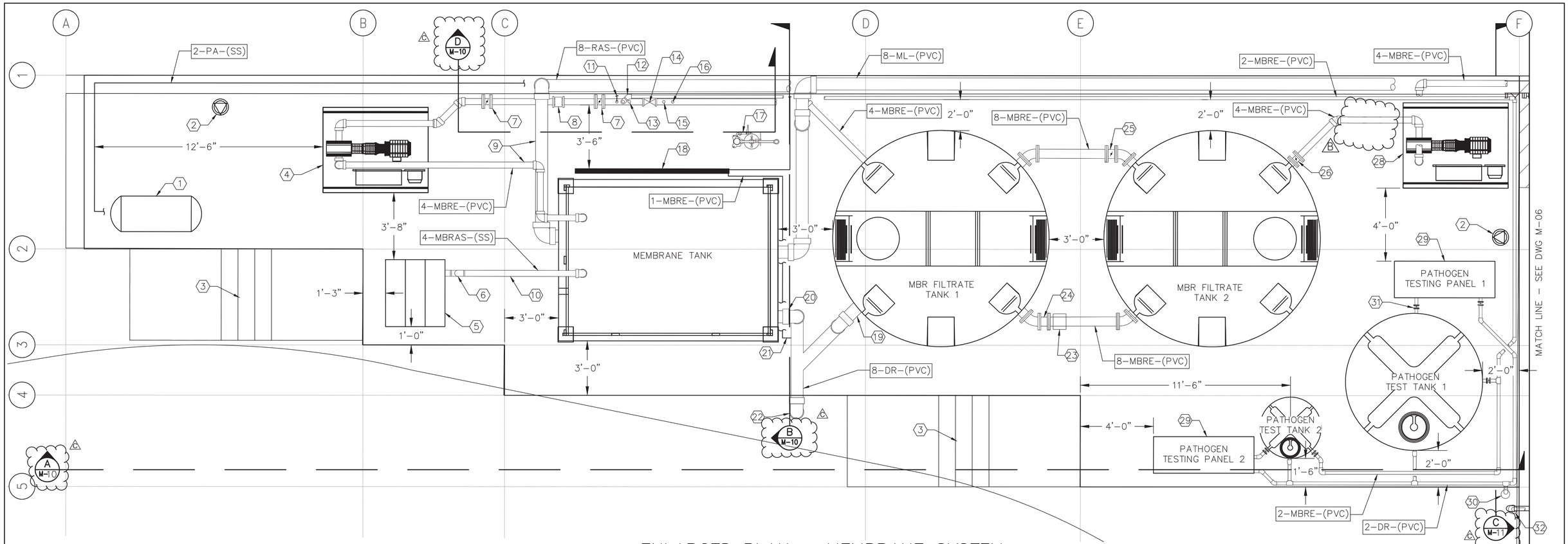

ENLARGED PLAN – MEMBRANE SYSTEM

SCALE: 3/8"=1'-0"

GENERAL NOTES

1. PIPING SUPPORTS ARE DEFERRED DESIGN AND SHALL BE BY THE CONTRACTOR'S PIPE SUPPORT DESIGNER PER SECTION 40 05 07. ANY SUPPORTS SHOWN ON DRAWINGS INCLUDING PIPE SUPPORT DETAILS ARE FOR VISUAL AND SPATIAL REFERENCE ONLY.

2. EQUIPMENT PROVIDED BY BNR/MBR SYSTEM SUPPLIER PER SPECIFICATIONS 46 41 40 AND 46 61 33.

KEY NOTES

1. CASSF AIR COMPRESSOR. ME-200. FIELD ROUTE 2-INCH PLANT AIR TO COMPRESSOR.
2. UTILITY STATION PER DETAIL M5021.
3. ACCESS STAIRWAY. SEE STRUCTURAL DRAWINGS FOR ADDITIONAL INFORMATION.
4. MBR SYSTEM FILTRATE/BACKWASH PUMP. P-510.
5. MBR AIR SCOUR BLOWER SKID. BLR-530.
6. MBR AIR SCOUR BLOWER SHIPPED LOOSE INSTRUMENTATION. PIT-530, FIT-530, AND POV-501.
7. 4-INCH BUTTERFLY VALVES. VF-510A, VF-510B.
8. 4-INCH FLOW METER. FIT-411.
9. ROUTE PIPES OVERHEAD TO ALLOW FOR ACCESS EAST OF MEMBRANE TANK.
10. ROUTE PIPES OVERHEAD.
11. 1-INCH MBR ANALYZER PANEL SAMPLE WATER. FIELD ROUTE TO ANALYZER PANEL.
12. 2-INCH PATHOGEN TEST TANK FILL LINES FIELD ROUTE TO PATHOGEN TEST TANKS.
13. PREFORMED CHLORAMINES INJECTION PER DETAIL M2100, SIMILAR. CONTRACTOR TO FIELD ROUTE CHEMICAL LINES FROM AREA 8.
14. 4-INCH STATIC MIXER. MXR-513.
15. CITRIC ACID INJECTION PER DETAIL M2100, SIMILAR. CONTRACTOR TO FIELD ROUTE CHEMICAL LINES FROM AREA 8.
16. SODIUM HYPOCHLORITE INJECTION PER DETAIL M2100, SIMILAR. CONTRACTOR TO FIELD ROUTE CHEMICAL LINES FROM AREA 8.
17. EMERGENCY EYEWASH AND SHOWER, FIELD ROUTE 1-1/4" POTABLE WATER.
18. MBR SYSTEM FILTRATE ANALYZER PANEL. ME-540.
19. 8-INCH BUTTERFLY VALVE (NOT SHOWN). VF-620.
20. 8-INCH PLUG VALVE (NOT SHOWN). MEMBRANE TANK DRAIN VALVE. VP-500A.
21. 2-INCH DRAIN FROM MBR ANALYZER PANEL.
22. 6-INCH DRAIN. CONNECT TO CIVIL DRAIN USING DETAIL M5077. SEE CIVIL FOR CONTINUATION.
23. PIPE SUPPORT PER GENERAL NOTE 1.
24. 8-INCH FLEXIBLE PIPE CONNECTOR.
25. 8-INCH BUTTERFLY VALVE. V-550B.
26. 4-INCH BUTTERFLY VALVE. VF-560.
27. ~~4-INCH FLOW METER. FIT-571.~~ B
28. PURE WATER FACILITY FEED PUMP. P-570.
29. PATHOGEN TESTING PANEL NO. 1 AND NO. 2. SEE I-61 FOR ADDITIONAL INFORMATION.
30. PATHOGEN TEST TANK DRAINS. CONNECT TO CIVIL DRAIN USING DETAIL M5076. SEE CIVIL FOR CONTINUATION.
31. 2-INCH PVC PATHOGEN TEST TANK VALVES (TYP.). SEE I-61 FOR TAG NUMBERS.
32. WAS DRAIN LINE. SEE M-06. CONNECT TO CIVIL DRAIN USING DETAIL M5077. SEE CIVIL FOR CONTINUATION.

KEY MAP

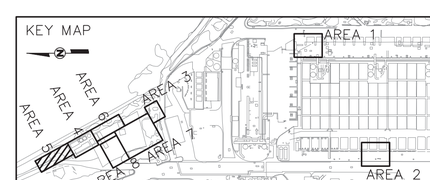

CONSULTANT

Stantec

Brown AND Caldwell

Trussell TECHNOLOGIES INC

REGISTERED PROFESSIONAL ENGINEER PATRICK J. STAHL No. C82053 Exp. 3-31-2024 CIVIL STATE OF CALIFORNIA

12/27/22

CENTRAL AREA SMALL-SCALE FACILITY

MECHANICAL

AREA 5 MBR SYSTEM ENLARGED PLAN

M-09

CITY OF SAN DIEGO, CALIFORNIA
ENGINEERING AND CAPITAL PROJECTS DEPARTMENT
SHEET 83 OF 264 SHEETS

WBS B-21151

APPROVED FOR/CITY ENGINEER: ALICE ALTES — DATE: 10/13/2022 — RCE#: C68286

SUBMITTED BY: JOSEPH QUICHO, PROJECT MANAGER

CO-EDED BY: MICHAEL VIOLANTE, PROJECT ENGINEER

DESCRIPTION	BY	APPROVED	DATE	FILMED
ORIGINAL	STN		10/22	
B ADDENDUM B	STN		12/22	
C ADDENDUM C	STN		12/22	

CONTRACTOR
INSPECTOR
NTP DATE
NOC DATE

186-1692 CCS27 COORDINATE
1826444-6250407 CCS83 COORDINATE

DRAWING NO. 0100179-83-D — M09

AREA 5 MBR SYSTEM ENLARGED PLAN

FILENAME: CASSF-M-09.DWG

C MODIFIED SECTION SHEET REFERENCE

B RELOCATE FLOW METER FIT-571 TO AREA 4. SEE M-12.

ADDENDUM C

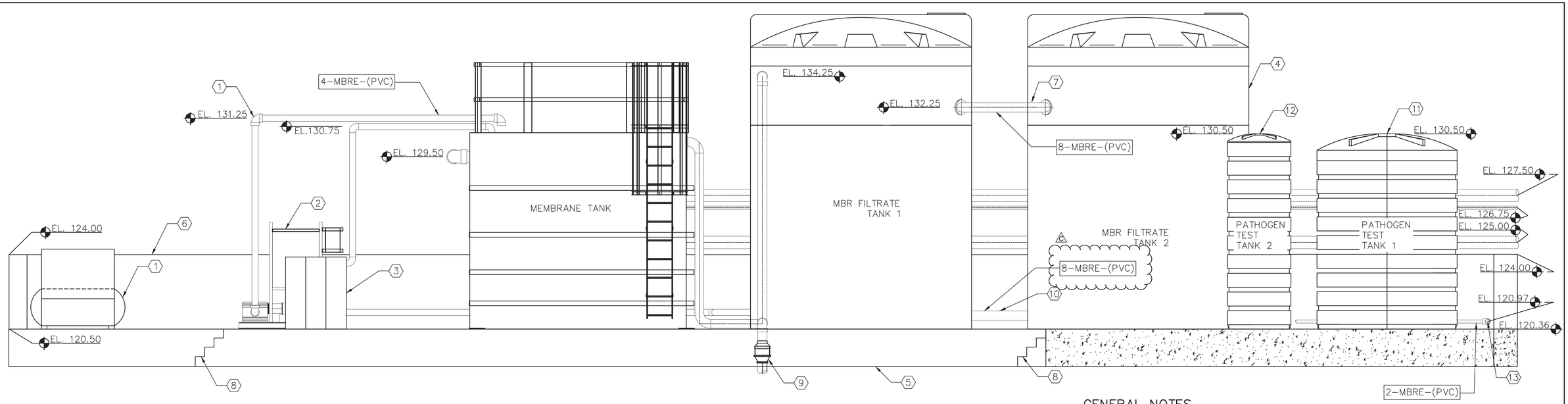

SECTION A M-09
SCALE: 3/8"=1'-0"

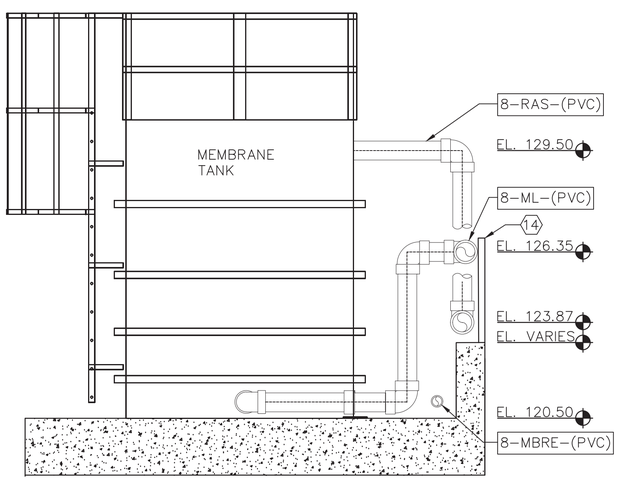

SECTION B M-09
SCALE: 3/8"=1'-0"

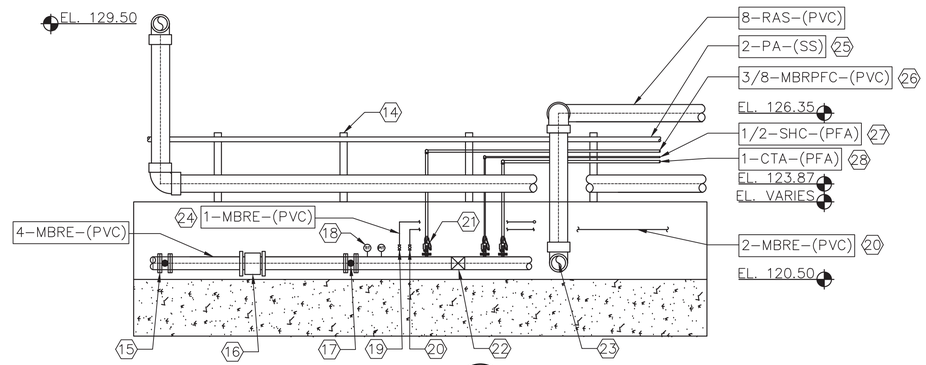

SECTION D M-09
SCALE: 3/8"=1'-0"

GENERAL NOTES

1. PIPING SUPPORTS ARE DEFERRED DESIGN AND SHALL BE THE CONTRACTOR'S PIPE SUPPORT DESIGNER PER SECTION 40 05 07. ANY SUPPORT SHOWN ON DRAWING INCLUDING PIPE SUPPORT DETAIL ARE FOR REFERENCE ONLY.
2. EQUIPMENT PROVIDED BY BNR/MBR SYSTEM SUPPLIER PER SPECIFICATION 46 41 40 AND 46 61 33.

KEY NOTES

1 CASSF AIR COMPRESSOR. ME-200. FIELD ROUTE 2-INCH PLANT AIR TO COMPRESSOR.
2 MBR SYSTEM FILTRATE/BACKWASH PUMP. P-510.
3 MBR AIR SCOUR BLOWER SKID. BLR-530.
4 MBR FILRATE TANKS. TNK-550 AND TNK-560.
5 NEW AREA 5 CONCRETE SLAB. SEE STRUCTURAL DRAWINGS.
6 NEW RETAINING WALL. SEE STRUCTURAL AND CIVIL DRAWINGS.
7 RAISED MBR FILTRATE TRANSFER PIPE.
8 ACCESS STAIRWAYS. SEE CIVIL AND STRUCTURAL DRAWINGS.
9 6-INCH DRAIN. CONNECT TO CIVIL DRAIN USING DETAIL M5077. SEE CIVIL FOR CONTINUATION.
10 8-INCH CONNECTION BETWEEN TNK-550 TO TNK-560.
11 PATHOGEN TEST TANK NO. 1. TNK-610.
12 PATHOGEN TEST TANK NO. 2. TNK-620.
13 FIELD ROUTE PATHOGEN TEST TANK FEED LINES TO TEST TANKS.
14 CONTRACTOR TO PROVIDE PIPE SUPPORTS PER SPECIFICATIONS.
15 4-INCH BUTTERFLY VALVE. VF-510A.
16 FLOW METER. FIT-511.
17 4-INCH BUTTERFLY VALVE. VF-510B.
18 INSTRUMENTS. TIT-512 AND PIT-510B.
19 VB-510C. FIELD ROUTE LINE TO MBR ANALYZER PANEL.
20 FIELD ROUTE 2-INCH PVC LINE TO PATHOGEN TEST TANKS.
21 PREFORMED CHLORAMINES INJECTION PER DETAIL M2100, SIMILAR. CONTRACTOR TO FIELD ROUTE CHEMICAL LINES FROM AREA 8 TO AREA 4.
22 STATIC MIXER. MXR-513.
23 8-INCH ML PVC LINE. ROUTE TO MBR TANK.
24 FIELD ROUTE TO MBR ANALYZER PANEL.
25 COMPRESSED AIR LINE. FIELD ROUTE FROM AIR COMPRESSOR TO AREA 7.
26 FIELD ROUTE FROM AREA 8.
27 SODIUM HYPOCHLORITE INJECTION PER DETAIL M2100, SIMILAR. CONTRACTOR TO FIELD ROUTE CHEMICAL LINES FROM AREA 8 TO AREA 4.
28 CITRIC ACID INJECTION PER DETAIL M2100, SIMILAR. CONTRACTOR TO FIELD ROUTE CHEMICAL LINES FROM AREA 8 TO AREA 4.

M-10

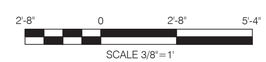

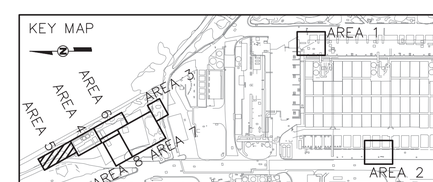

CENTRAL AREA SMALL-SCALE FACILITY

MECHANICAL
AREA 5 MBR SYSTEM
SECTIONS AND DETAILS - 1

CITY OF SAN DIEGO, CALIFORNIA
ENGINEERING AND CAPITAL PROJECTS DEPARTMENT
SHEET 84 OF 264 SHEETS

WBS B-21151

CONSULTANT: Stantec, Brown AND Caldwell, Trussell TECHNOLOGIES INC

REGISTERED PROFESSIONAL ENGINEER PATRICK J. STAHL No. C82053 Exp. 3-31-2024 CIVIL STATE OF CALIFORNIA 12/27/22

APPROVED: FOR CITY ENGINEER ALICE ALTES, PRINT DCE NAME — DATE 10/13/2022 — RCE# C68286

SUBMITTED BY: JOSEPH QUICHO, PROJECT MANAGER
CHECKED BY: MICHAEL VIOLANTE, PROJECT ENGINEER

DESCRIPTION	BY	APPROVED	DATE	FILMED
ORIGINAL	STN		10/22	
6 ADDENDUM C	STN		12/22	

186-1692 CCS27 COORDINATE
1826444-6250407 CCS83 COORDINATE
DRAWING NO. 0100179-84-D — M10

CONTRACTOR
INSPECTOR
NTP DATE
NOC DATE

AREA 5 MBR SYSTEM SECTIONS AND DETAILS - 1

6 REVISED PIPE CALLOUT FROM 6-INCHES TO 8-INCHES TO BE CONSISTENT WITH P&IDS.

ADDENDUM C

FILENAME: CASSF-M-10.DWG

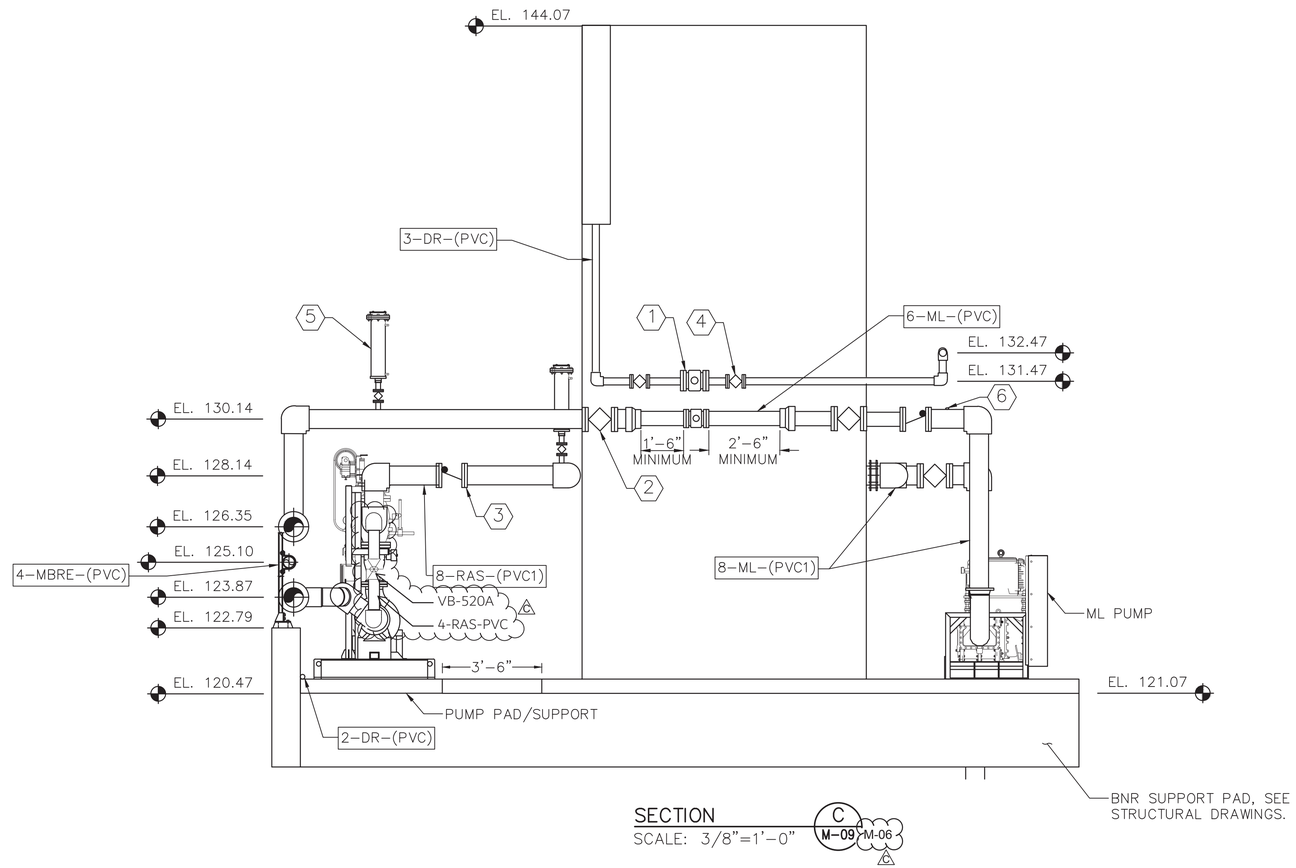

SECTION C M-09 M-06
SCALE: 3/8"=1'-0"

GENERAL NOTES:

1. THE SLOPE OF THE FINISHED FLOOR IS PER CIVIL DRAWING SHEET C-05 TO ALLOW DRAINAGE TO THE WEST SIDE. EQUIPMENT PADS TO BE FLAT FACED.
2. ALL FITTINGS ON THE 1/3 LOWER SIDEWALL OF TANK SHALL HAVE 100% VIRGIN PTFE FLEXJOINT® EXPANSION JOINT. EXPANSION JOINT TO HAVE 3 CONVOLUTIONS, STAINLESS STEEL LIMIT CABLES, FRP COMPOSITE FLANGES AND MEET PERFOMANCE IN SPECIFICATIONS. TANK EXPANSION JOINTS SHALL BE INCLUDED AS PART OF WWSS PACKAGE.

KEY NOTES

1. MAGNETIC FLOWMETER, TYPICAL. FE/FIT-423, FE/FIT-431.
2. 8" PLUG VALVE, TYPICAL. VP-430A, VP-430B, VP-430C
3. 8" CHECK VALVE, TYPICAL. VC-430, VC-520.
4. 3" PLUG VALVE, TYPICAL. VP-420A, VP-420B.
5. 2" COMBINATION AIR RELEASE VALVE PER SPECIFICATION 40 05 78.23, TYPICAL. ARV-430, ARV-XXX (RAS)
6. PRESSURE GAUGE, PI/PSH-430.

M-11

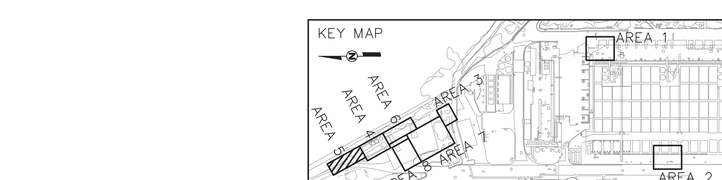

CENTRAL AREA SMALL-SCALE FACILITY

AREA 5 MBR SYSTEM
SECTIONS AND DETAILS-2

CITY OF SAN DIEGO, CALIFORNIA
ENGINEERING AND CAPITAL PROJECTS DEPARTMENT
SHEET 85 OF 264 SHEETS

WBS B-21151

CONSULTANT

Stantec
Brown AND Caldwell
Trussell TECHNOLOGIES INC

REGISTERED PROFESSIONAL ENGINEER PATRICK J. SAND No. C82053 Exp. 3-31-2024 CIVIL STATE OF CALIFORNIA
12/27/22

APPROVED: FOR CITY ENGINEER — DATE 10/13/2022
ALICE ALTES — PRINT DCE NAME — RCE# C68286

SUBMITTED BY: JOSEPH QUICHO — PROJECT MANAGER
CHECKED BY: MICHAEL VIOLANTE — PROJECT ENGINEER

DESCRIPTION	BY	APPROVED	DATE	FILMED
ORIGINAL	BC		10/22	
6 ADDENDUM C	BC		12/22	

186-1692 CCS27 COORDINATE
1826444-6250407 CCS83 COORDINATE

CONTRACTOR
INSPECTOR
NTP DATE
NOC DATE

DRAWING NO. 0100179-85-D M11

2'-8" 0 2'-8" 5'-4"
SCALE 3/8"=1'

6 RAS RECIRC LINE ADDED.

ADDENDUM C

AREA 5 MBR SYSTEM SECTIONS AND DETAILS - 2

FILENAME: CASSF-M-11.DWG

December 29, 2022
Pure Water Program (PWP) Central Area Small Scale Facility

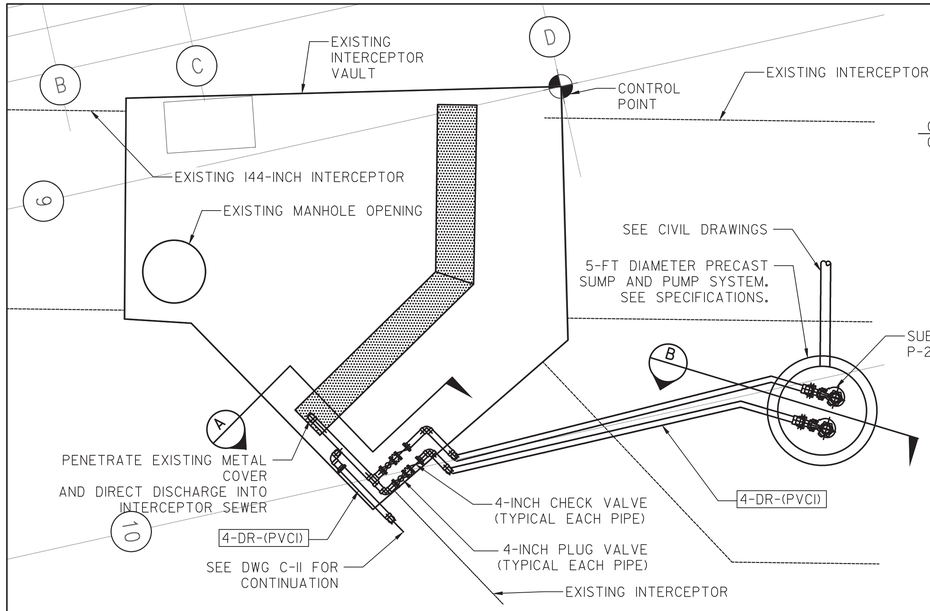

PROCESS DRAIN PUMP STATION
NO SCALE

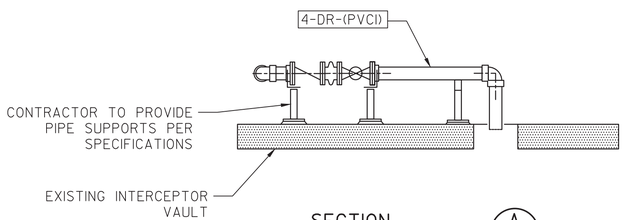

SECTION A
NO SCALE

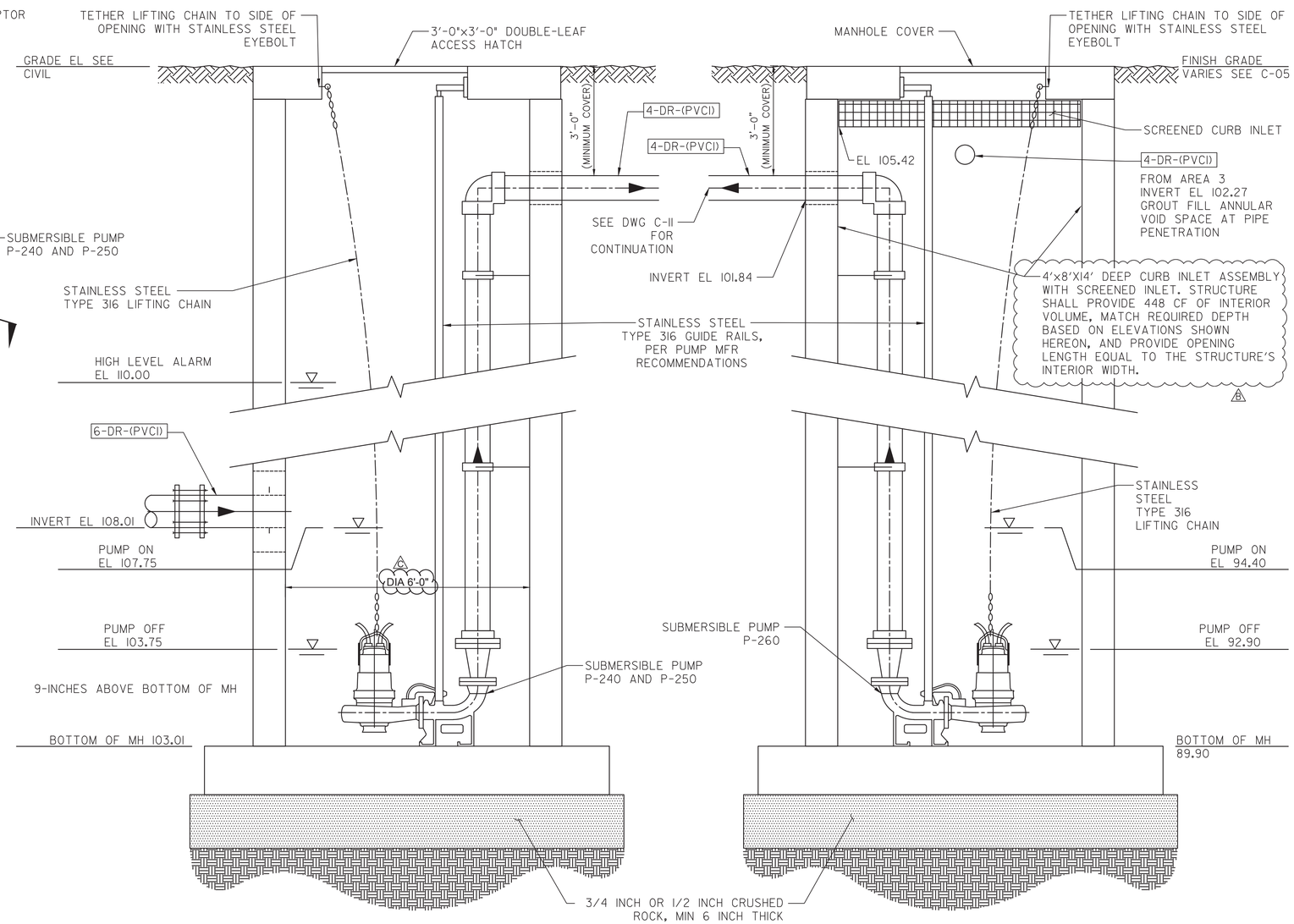

SECTION B
NO SCALE

SECTION C
NO SCALE

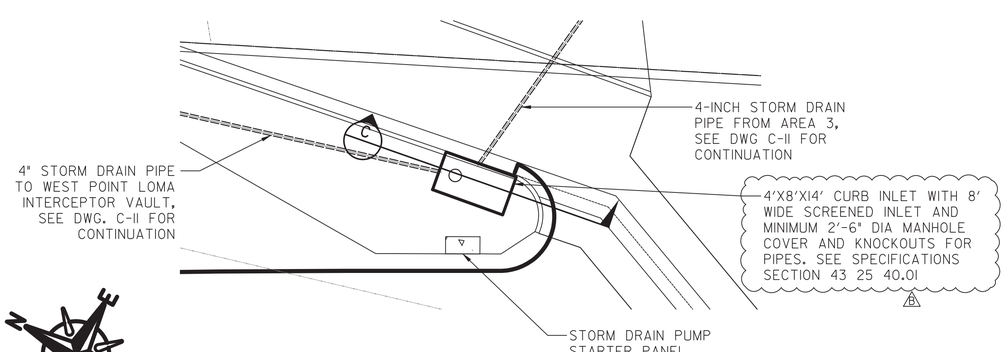

PLAN: STORMWATER DRAIN PUMP STATION
NO SCALE

DRAIN PUMP STATION DETAILS

M-24

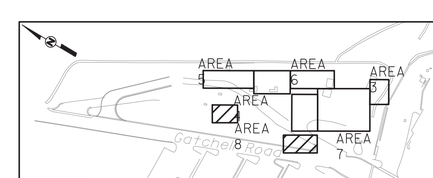

KEY MAP

CENTRAL AREA SMALL-SCALE FACILITY
MECHANICAL
DRAIN PUMP STATIONS - PLANS, SECTIONS AND DETAIL

CITY OF SAN DIEGO, CALIFORNIA
ENGINEERING AND CAPITAL PROJECTS DEPARTMENT
SHEET 98 OF 264 SHEETS

WBS B-21151

CONSULTANT

Stantec
Brown AND Caldwell
Trussell TECHNOLOGIES INC
TSAC ENGINEERING

REGISTERED PROFESSIONAL ENGINEER PATRICK J. STAHL No. C82053 Exp. 3-31-2024 CIVIL STATE OF CALIFORNIA
12/27/22

APPROVED: FOR/CITY ENGINEER ALICE ALTES PRINT DCE NAME — 10/13/2022 DATE — C68286 RCE#

SUBMITTED BY: JOSEPH QUICHO PROJECT MANAGER
CHECKED BY: MICHAEL VIOLANTE PROJECT ENGINEER

DESCRIPTION	BY	APPROVED	DATE	FILMED
ORIGINAL	STN		10/22	
B ADDENDUM B	STN		12/22	
C ADDENDUM C	STN		12/22	

CONTRACTOR
INSPECTOR
NTP DATE
NOC DATE

186-1692
CCS27 COORDINATE
1826444-6250407
CCS83 COORDINATE
DRAWING NO. 0100179-98-D
M24

FILENAME: CASSF-M-24.DWG

December 29, 2022
Pure Water Program (PWP) Central Area Small Scale Facility

C REVISED PROCESS DRAIN PUMP STATION SUMP DIAMETER
B REVISE DESCRIPTION OF CURB INLET BOX

ADDENDUM C

TANK NAME	TAG NUMBER	NOZZLE DESCRIPTION	LOCATION	NOZZLE DIAMETER	NOZZLE ANGLE	INVERT ELEVATION
O3 PRODUCT TANK	TNK-740	INLET FROM OZONE CONTACTOR	SIDEWALL	4"	180	0.5'
		INLET FROM OZONE CONTACTOR ANALYZER PANELS; SIDEWALL; 1/2" 180; 4.5'. DISCHARGE TO O3 PRODUCT PUMP SUCTION	SIDEWALL	4"	90	0.5'
		DRAIN	SIDEWALL	3"	270	0.5'
		OVERFLOW	SIDEWALL	8"	270	4'
		LEVEL SENSOR (LE)	SIDEWALL	6"	45	0.5'
		MANWAY	DOME	18"	0	NA
		INLET OZONE OFF GAS (FINE BUBBLE DIFFUSERS)	DOME	1"	90	NA
		INLET OZONE OFF GAS (OZONE CONTACTOR INLET)	DOME	1"	160	NA
		INLET OZONE OFF GAS (OZONE CONTACTOR)	DOME	1"	90	NA
		VENT TO OZONE DESTRUCT	DOME	1"	270	NA
BAC FILTRATE TANK	TNK-820	INLET FROM BAC FILTERS	SIDEWALL	4"	180	0.5'
		DISCHARGE TO BAC FILTRATE OVERFLOW TANK	SIDEWALL	4"	315	0.5'
		4' DISCHARGE TO BAC FILTRATE OVERFLOW TANK	SIDEWALL	8"	315	4'
		DRAIN	SIDEWALL	3"	0	0.5'
		OVERFLOW	SIDEWALL	8"	0	4.5'
		LEVEL SENSOR (LE)	SIDEWALL	6"	270	0.5'
		MANWAY	DOME	18"	225	NA
		VENT	DOME	2"	45	NA
BAC FILTRATE OVERFLOW TANK	TNK-830	INLET FROM BAC FILTRATE TANK	SIDEWALL	8"	135	4'
		INLET FROM BAC FILTRATE TANK	SIDEWALL	4"	315	0.5'
		DISCHARGE TO BAC BACKWASH TRANSFER PUMP SUCTION	SIDEWALL	1.5"	270	0.5'
		DRAIN	SIDEWALL	3"	90	0.5'
		OVERFLOW	SIDEWALL	8"	90	4.5'
		LEVEL SENSOR (LE)	SIDEWALL	6"	225	0.5'
		MANWAY	DOME	18"	180	NA
		VENT	DOME	2"	0	NA
BAC BACKWASH SUPPLY TANK	TNK-850	INLET FROM BAC BACKWASH TRANSFER PUMP	DOME	1.5"	90	NA
		DISCHARGE TO BAC BACKWASH SUPPLY PUMP SUCTION	SIDEWALL	6"	140	0.5'
		DRAIN	SIDEWALL	3"	90	0.5'
		OVERFLOW	SIDEWALL	3"	90	7.8'
		LEVEL SENSOR (LE)	SIDEWALL	6"	0	0.5'
		MANWAY	DOME	18"	270	NA
		VENT	DOME	2"	180	NA
RO FEED TANK	TNK-1000	INLET FROM MF SYSTEM	SIDEWALL	4"	0	7.3'
		DISCHARGE TO MURRAY RO AND FRRO	SIDEWALL	4"	270	0.5'
		DISCHARGE TO MURRAY CCRO	SIDEWALL	3"	290	0.5'
		DISCHARGE TO MF BACKWASH SUPPLY	SIDEWALL	3"	90	0.5'
		DRAIN	SIDEWALL	3"	180	0.5'
		OVERFLOW	SIDEWALL	6"	180	7.3'
		LEVEL SENSOR (LE)	SIDEWALL	6"	45	0.5'
		MANWAY	DOME	18"	135	NA
		VENT	DOME	2"	0	NA
CCRO PERMEATE TANK	TNK-1030	INLET FROM CCRO SYSTEM	SIDEWALL	1.5"	0	5'
		DISCHARGE TO PUMP SUCTION	SIDEWALL	1.5"	270	0.5'
		DRAIN	SIDEWALL	1.5"	90	0.5'
		OVERFLOW	SIDEWALL	2"	90	5'
		LEVEL SENSOR (LE)	SIDEWALL	6"	135	0.5'
		MANWAY	DOME	16"	180	NA
		VENT	DOME	2"	0	NA
RO CIP TANK	TNK-1060	INLET FROM FLUSH TANK	DOME	2"	0	NA
		INLET FROM PERMEATE RETURN	DOME	3"	180	NA
		INLET FROM CONCENTRATE RETURN	DOME	3"	270	NA
		INLET FROM CIP PUMP RETURN	DOME	3"	290	NA
		DISCHARGE TO CIP PUMP	SIDEWALL	3"	0	0.5'
		DRAIN	SIDEWALL	1.5"	180	0.5'
		OVERFLOW	SIDEWALL	4"	180	5.6'
		SIDE-MOUNTED IMMERSION HEATER	SIDEWALL	4"	120	1'
		LEVEL SENSOR (LE)	SIDEWALL	6"	180	0.5'
		MANWAY	DOME	16"	135	NA
		VENT	DOME	2"	300	NA
		VENT	DOME	2"	300	NA

TANK NAME	TAG NUMBER	NOZZLE DESCRIPTION	LOCATION	NOZZLE DIAMETER	NOZZLE ANGLE	INVERT ELEVATION
RO FLUSH TANK	TNK-1075	INLET FROM MURRAY RO COMBINED PERMEATE	SIDEWALL	4"	90	6.5'
		INLET FROM SV RO PERMEATE	SIDEWALL	1.5"	0	6.5'
		DISCHARGE TO CIP FILL/RO FLUSH PUMP SUCTION	SIDEWALL	3"	90	0.5'
		DRAIN	SIDEWALL	2.5"	270	0.5'
		OVERFLOW	SIDEWALL	6"	270	6.5'
		LEVEL SENSOR (LE)	SIDEWALL	6"	0	0.5'
		MANWAY	DOME	18"	180	NA
		INLET FOR SBS	DOME	0.5"	270	NA
		VENT	DOME	2"	0	NA
RO PERMEATE CARRIER WATER TANK	TNK-1200	INLET FROM MURRAY RO COMBINED PERMEATE	SIDEWALL	1"	90	2.8'
		INLET STAGE 1 MURRAY RO PERMEATE	SIDEWALL	6 0.625"	75	2.8'
		DISCHARGE TO PREFORMED PUMP SUCTION	SIDEWALL	1"	270	0.5'
		DRAIN	SIDEWALL	1"	90	0.5'
		OVERFLOW	SIDEWALL	2"	180	2.4'
		LEVEL SENSOR (LE)	SIDEWALL	6"	0	0.5'
		LID	DOME	NA	NA	NA
MBR PERMEATE TANK 1	TNK-550	INLET FROM MBR FILTRATE PUMP	SIDEWALL	4	315	0.5'
		DISCHARGE TO MBR PERMEAT TANK 2	SIDEWALL	8	45	11'
		DRAIN	SIDEWALL	8	225	0.5'
		OVERFLOW	SIDEWALL	8	225	11.5'
		DRAIN CONNECTION TO MBR PERMEATE TANK 2	SIDEWALL	8	90	0.5'
		LEVEL SENSOR (LE)	SIDEWALL	2	135	0.5'
		MANWAY	DOME	18	180	NA
		VENT	DOME	4	0	NA
MBR PERMEATE TANK 2	TNK-560	INLET FROM MBR FILTRATE TANK	SIDEWALL	8	315	11'
		DISCHARGE TO PWF FEED PUMP	SIDEWALL	4	135	0.5'
		DRAIN	SIDEWALL	8	180	0.5'
		OVERFLOW	SIDEWALL	8	180	11.5'
		DRAIN CONNECTION TO MBR PERMEATE TANK 2	SIDEWALL	8	270	0.5'
		LEVEL SENSOR (LE)	SIDEWALL	2	225	0.5'
		MANWAY	DOME	18	180	NA
		VENT	DOME	4	0	NA

GENERAL NOTES

1. PALL FITTINGS ON THE 1/3 LOWER SIDEWALL OF TANKS WITH CAPACITIES ≥ 1000 GALLONS SHALL HAVE 100% VIRGIN PTFE FLEXJOINT® EXPANSION JOINT. EXPANSION JOINT TO HAVE 3 CONVOLUTIONS, STAINLESS STEEL LIMIT CABLES, FRP COMPOSITE FLANGES AND MEET PERFORMANCE IN SPECIFICATIONS. TANK EXPANSION JOINTS SHALL BE INCLUDED AS PART OF TANK PACKAGE.

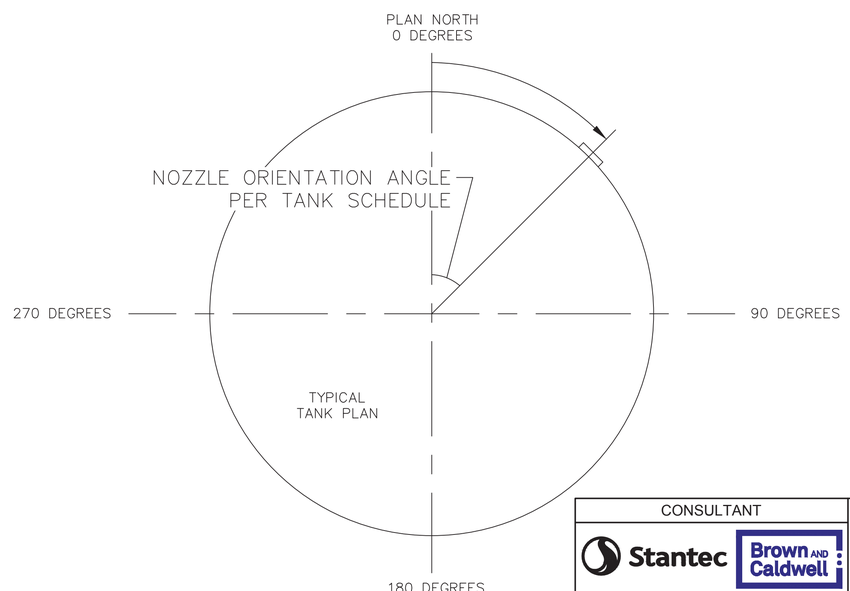

TANK NOZZLE DETAILS - 2

M-31

CENTRAL AREA SMALL-SCALE FACILITY

MECHANICAL
TANK NOZZLE DETAILS - 2

CITY OF SAN DIEGO, CALIFORNIA
ENGINEERING AND CAPITAL PROJECTS DEPARTMENT
SHEET 105 OF 264 SHEETS

WBS B-21151

CONSULTANT

Stantec
Brown AND Caldwell
Trussell TECHNOLOGIES INC

REGISTERED PROFESSIONAL ENGINEER
ALI R. H. P.
No. M34275
EXP. 12-31-22
MECHANICAL
STATE OF CALIFORNIA
12/27/22

APPROVED: FOR CITY ENGINEER ALICE ALTES PRINT DCE NAME — DATE 10/13/2022 — RCE# C68286

DESCRIPTION	BY	APPROVED	DATE	FILMED
ORIGINAL	BC		10/22	
A ADDENDUM C	BC		12/22	

CONTRACTOR
INSPECTOR
NTP DATE
NOC DATE

SUBMITTED BY: JOSEPH QUICHO, PROJECT MANAGER
CHECKED BY: MICHAEL VIOLANTE, PROJECT ENGINEER
186-1692 CCS27 COORDINATE
1826444-6250407 CCS83 COORDINATE
DRAWING NO. 0100179-105-D
M31

A REVISED TNK-1200 NOZZLE DIAMETER

ADDENDUM C

FILENAME: CASSF-M-31.DWG

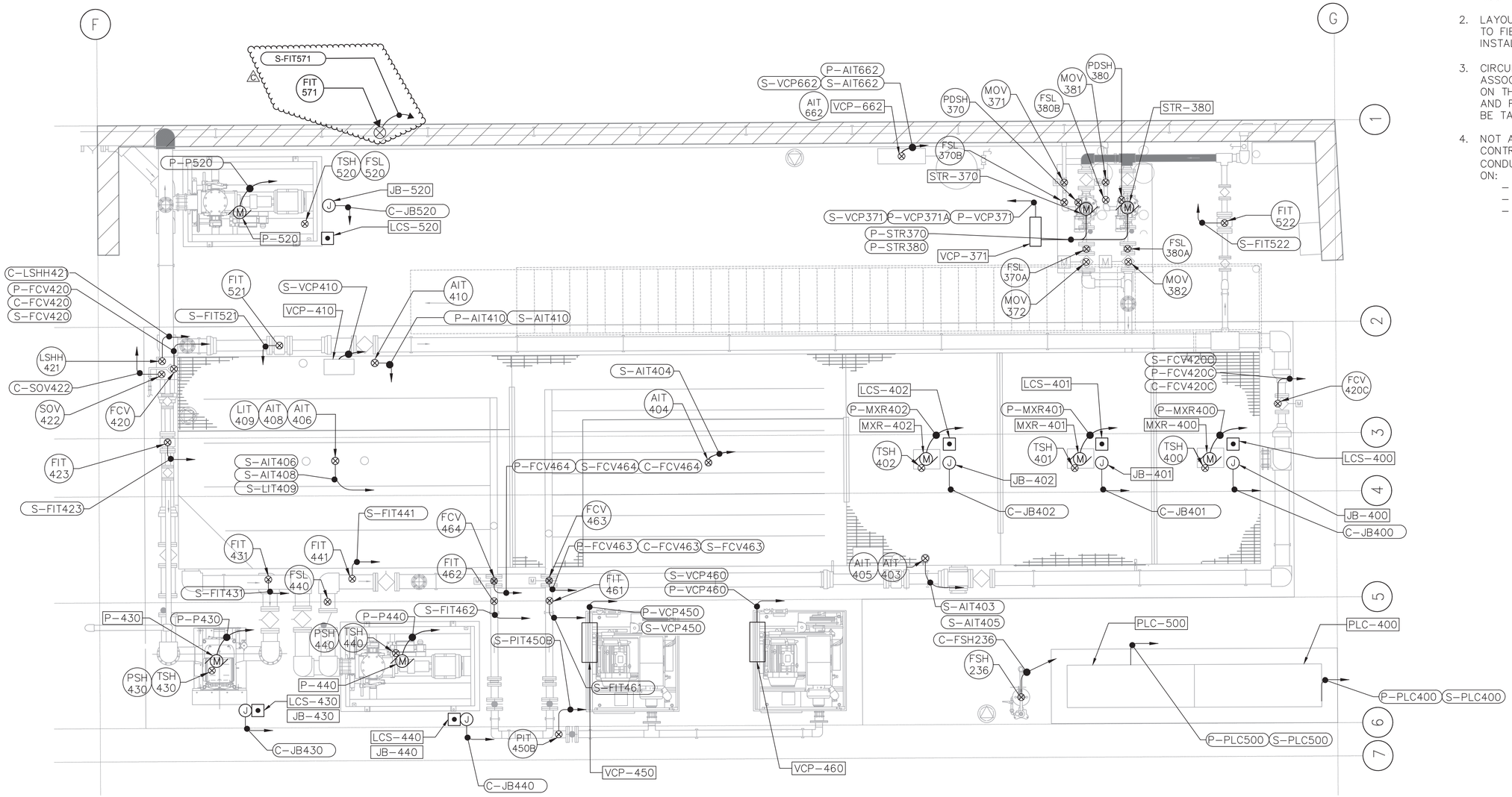

AREA 4 BNR PLAN

SCALE 3/8"=1'-0"

GENERAL NOTES

1. SEE GENERAL NOTES ON DWG E-03 FOR CONDUIT ROUTING REQUIREMENTS.
2. LAYOUT IS GENERAL AND DIAGRAMMATIC, CONTRACTOR TO FIELD ROUTE CONDUIT BASED ON ACTUAL EQUIPMENT INSTALLATION. TYPICAL.
3. CIRCUITS BEYOND EQUIPMENT PANEL/J-BOX TO ASSOCIATED EQUIPMENT AND DEVICES ARE NOT ROUTED ON THE PLAN DRAWINGS. CONTRACTOR SHALL PROVIDE AND FIELD ROUTE AS REQUIRED. EACH CONDUIT SHALL BE TAGGED PER GUIDELINE ON DWG E-01. TYPICAL.
4. NOT ALL EQUIPMENT AND CONDUIT ARE SHOWN. CONTRACTOR SHALL PROVIDE AND FIELD ROUTE ALL CONDUITS BACK TO IT'S RESPECTIVE SOURCE AS SHOWN ON:
   - SINGLE LINE DIAGRAMS E-21 TO E-25
   - RISER DIAGRAMS E-31 TO E-46
   - PANEL SCHEDULES E-61

AREA 4 BNR TANK PLAN

E-06

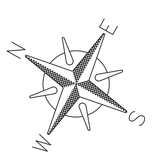

0 2 5 10

SCALE 3/8"=1'-0"

KEY MAP

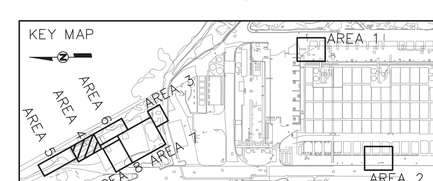

CONSULTANT

Stantec

Brown AND Caldwell

Trussell TECHNOLOGIES INC

REGISTERED PROFESSIONAL ENGINEER SANG V. VO No. E20291 Exp. 03-31-23 ELECTRICAL STATE OF CALIFORNIA 12/27/22

CONTRACTOR
INSPECTOR
NTP DATE
NOC DATE

CENTRAL AREA SMALL-SCALE FACILITY

ELECTRICAL
AREA 4 BNR TANK
PLAN

CITY OF SAN DIEGO, CALIFORNIA
ENGINEERING AND CAPITAL PROJECTS DEPARTMENT
SHEET 112 OF 264 SHEETS

WBS B-21151

APPROVED: FOR CITY ENGINEER — ALICE ALTES — PRINT DCE NAME — 10/13/2022 DATE — C68286 RCE#

SUBMITTED BY: JOSEPH QUICHO, PROJECT MANAGER

CHECKED BY: MICHAEL VIOLANTE, PROJECT ENGINEER

DESCRIPTION	BY	APPROVED	DATE	FILMED
ORIGINAL	BC		10/22	
A ADDENDUM C	BC		12/22	

186-1692
CCS27 COORDINATE
1826444-6250407
CCS83 COORDINATE

DRAWING NO. 0100179-112-D — E06

A REVISED LOCATION OF FIT 571.

ADDENDUM C

FILENAME: CASSF-E-06.DWG

December 29, 2022
Pure Water Program (PWP) Central Area Small Scale Facility

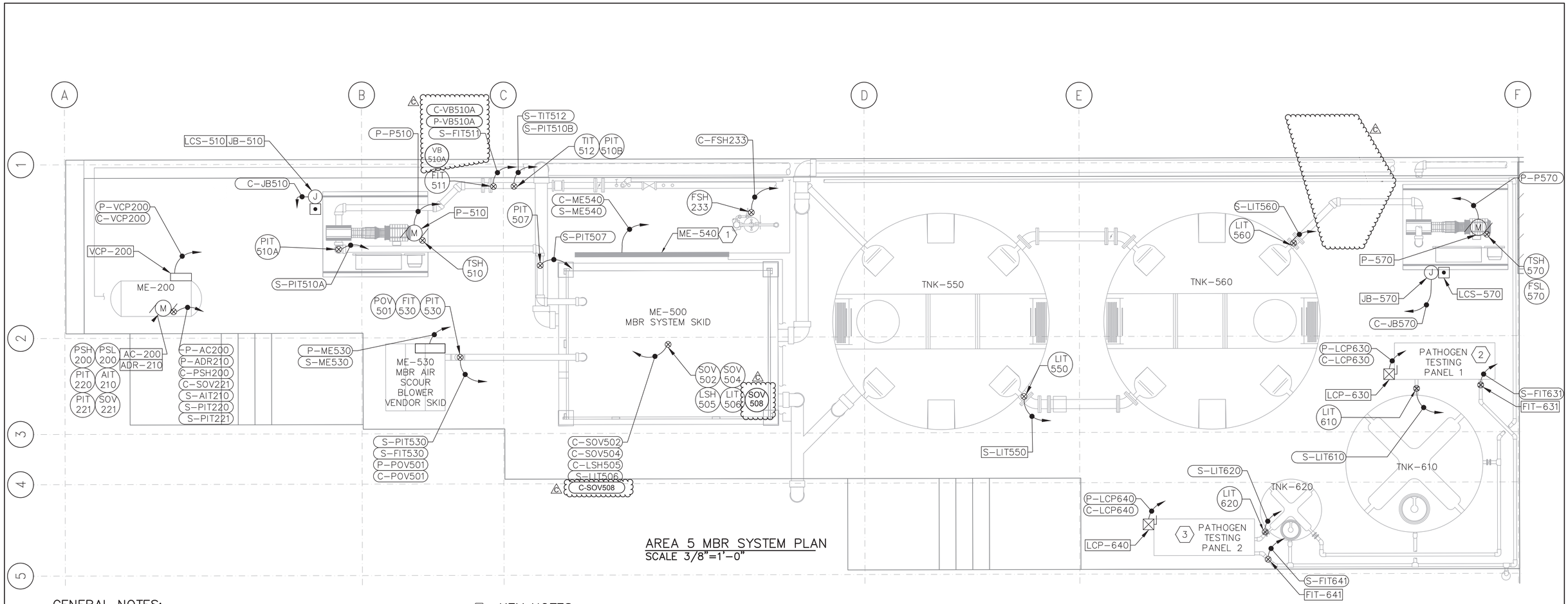

AREA 5 MBR SYSTEM PLAN
SCALE 3/8"=1'-0"

GENERAL NOTES:

1. SEE GENERAL NOTES ON DWG E-03 FOR CONDUIT ROUTING REQUIREMENTS.
2. LAYOUT IS GENERAL AND DIAGRAMMATIC, CONTRACTOR TO FIELD ROUTE CONDUIT BASED ON ACTUAL EQUIPMENT INSTALLATION. TYPICAL.
3. CIRCUITS BEYOND EQUIPMENT PANEL/J-BOX TO ASSOCIATED EQUIPMENT AND DEVICES ARE NOT ROUTED ON THE PLAN DRAWINGS. CONTRACTOR SHALL PROVIDE AND FIELD ROUTE AS REQUIRED. EACH CONDUIT SHALL BE TAGGED PER GUIDELINE ON DWG E-01. TYPICAL.
4. NOT ALL EQUIPMENT AND CONDUIT ARE SHOWN. CONTRACTOR SHALL PROVIDE AND FIELD ROUTE ALL CONDUITS BACK TO IT'S RESPECTIVE SOURCE AS SHOWN ON:
   - SINGLE LINE DIAGRAMS E-21 TO E-25
   - RISER DIAGRAMS E-31 TO E-46
   - PANEL SCHEDULES E-61

KEY NOTES

1. MBR SYSTEM FILTRATE ANALYZER PANEL AND ASSOCIATED INSTRUMENTS: FSL-540, AIT-541, AIT-542, AIT-543
2. PATHOGEN TESTING PANEL NO. 1 AND ASSOCIATED EQUIPMENT/INSTRUMENTS: P-630 (PATHOGEN PUMP 1), PSH-630, FIT-631
3. PATHOGEN TESTING PANEL NO. 2 AND ASSOCIATED EQUIPMENT/INSTRUMENTS: P-640 (PATHOGEN PUMP 2), PSH-640, FIT-641

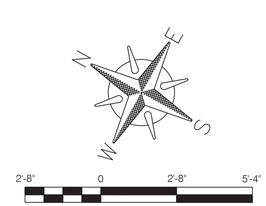

KEY MAP

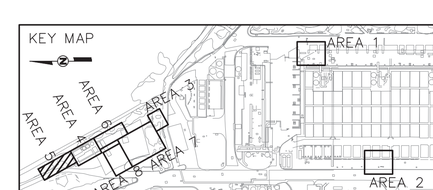

CONSULTANT

Stantec
Brown AND Caldwell
Trussell TECHNOLOGIES INC
TSAC ENGINEERING

REGISTERED PROFESSIONAL ENGINEER SANG V. VO No. 120291 Exp. 03-31-23 ELECTRICAL STATE OF CALIFORNIA
12/27/22

CENTRAL AREA SMALL-SCALE FACILITY

ELECTRICAL
AREA 5 MBR SYSTEM PLAN

CITY OF SAN DIEGO, CALIFORNIA
ENGINEERING AND CAPITAL PROJECTS DEPARTMENT
SHEET 113 OF 264 SHEETS

WBS B-21151

APPROVED: FOR CITY ENGINEER — ALICE ALTES (PRINT DCE NAME) — DATE 10/13/2022 — RCE# C68286

SUBMITTED BY: JOSEPH QUICHO, PROJECT MANAGER

CHECKED BY: MICHAEL VIOLANTE, PROJECT ENGINEER

DESCRIPTION	BY	APPROVED	DATE	FILMED
ORIGINAL	BC		10/22	
6 ADDENDUM C	BC		12/22	

186-1692 CCS27 COORDINATE
1826444-6250407 CCS83 COORDINATE

DRAWING NO. 0100179-113-D — E07

CONTRACTOR
INSPECTOR
NTP DATE
NOC DATE

E-07

6 POWER FEEDS FOR VALVES VB-510A AND SOV508 ADDED. LOCATION OF FIT-571 MODIFIED.

ADDENDUM C

AREA 5 MBR SYSTEM PLAN

FILENAME: CASSF-E-07.DWG

December 29, 2022
Pure Water Program (PWP) Central Area Small Scale Facility

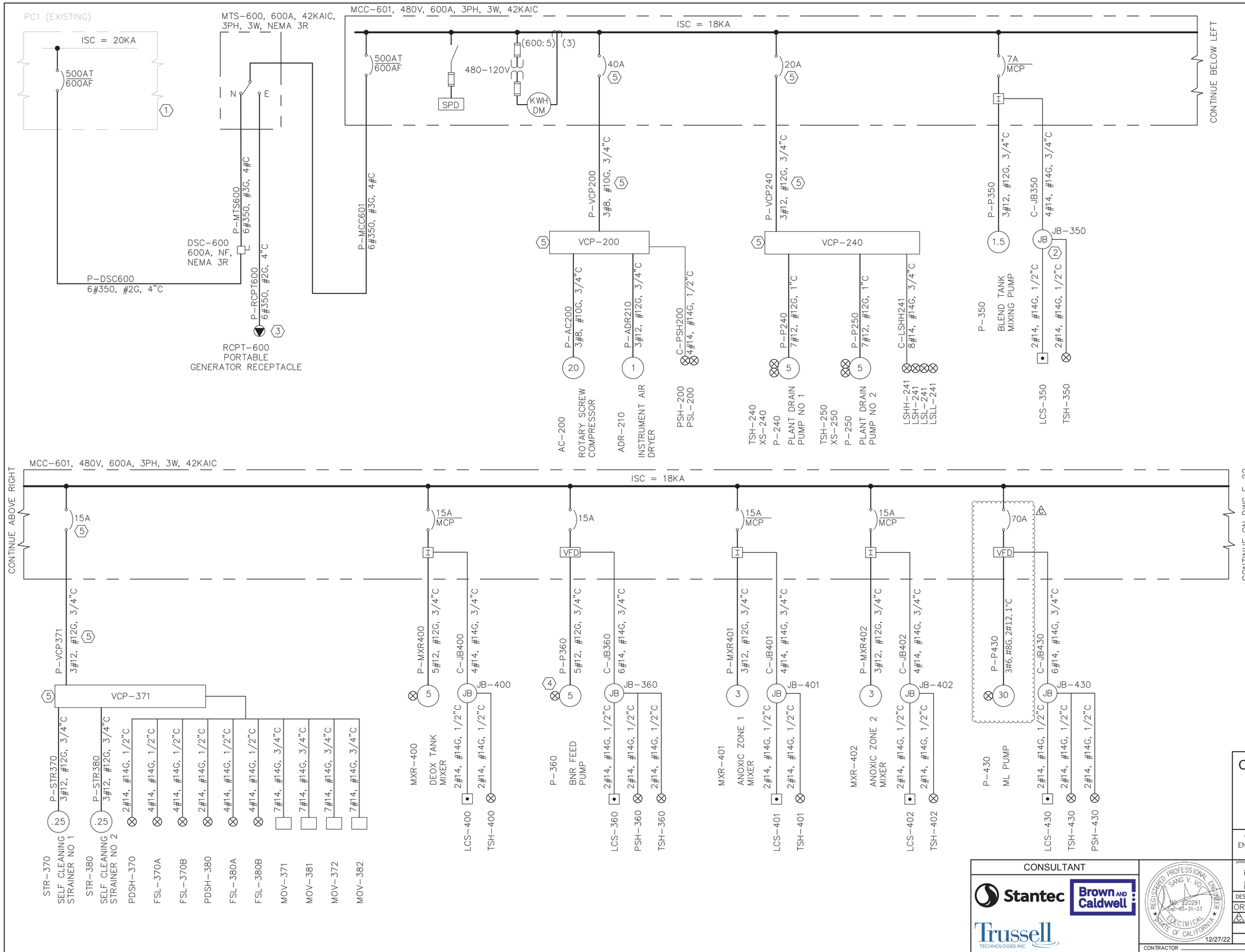

KEY NOTES

1. POWER SOURCE FROM EXISTING PC1. SEE DETAILS E0001 AND E0002 ON E-81.
2. CIRCUITS BEYOND EQUIPMENT J-BOXES TO ASSOCIATED EQUIPMENT AND DEVICES ARE NOT ROUTED ON THE PLAN DRAWINGS. CONTRACTOR SHALL PROVIDE AS SHOWN AND FIELD ROUTE AS REQUIRED. EACH CONDUIT SHALL BE TAGGED PER GUIDELINE ON DWG E-01. TYPICAL.
3. WHEN PORTABLE GENERATOR USAGE IS REQUIRED, ENSURE DISCONNECT DSC-600 IS SWITCHED OFF AND LOCKED IN THE OFF POSITION BEFORE CONNECTING GENERATOR.
4. PROVIDE 2#12 WITH POWER CONDUIT FOR MOTOR SPACE HEATER, TYPICAL FOR ALL MOTORS 5HP AND ABOVE.
5. CONTRACTOR SHALL VERIFY CIRCUIT BREAKER SIZING FOR VENDOR PACKAGED EQUIPMENT. UPDATE CIRCUIT AS REQUIRED BASED ON THE ACTUAL FLA OF EQUIPMENT PER NEC.

SINGLE LINE DIAGRAM - 1

E-21

CENTRAL AREA SMALL-SCALE FACILITY
ELECTRICAL
SINGLE LINE DIAGRAM - 1

CITY OF SAN DIEGO, CALIFORNIA
ENGINEERING AND CAPITAL PROJECTS DEPARTMENT
SHEET 124 OF 264 SHEETS

WBS B-21151

CONSULTANT
Stantec
Brown AND Caldwell
Trussell TECHNOLOGIES INC

REGISTERED PROFESSIONAL ENGINEER SANG V. VO NO. E20291 EXP. 03-31-23 ELECTRICAL STATE OF CALIFORNIA
12/27/22

APPROVED: FOR/CITY ENGINEER ALICE ALTES 10/13/2022 DATE
PRINT DCE NAME C68286 RCE#

SUBMITTED BY: JOSEPH QUICHO PROJECT MANAGER
CO-PROJECT MANAGER MICHAEL VIOLANTE PROJECT ENGINEER

DESCRIPTION	BY	APPROVED	DATE	FILMED
ORIGINAL	BC		10/22	
⚠C ADDENDUM C	BC		12/22	

CCS27 COORDINATE
CCS83 COORDINATE
DRAWING NO. 0100179-124-D E18

CONTRACTOR
INSPECTOR
NTP DATE
NOC DATE

⚠C HP, BREAKER SIZE, CABLES AND CONDUITS FOR P430 REVISED.

ADDENDUM C

FILENAME: CASSF-E-21.DWG

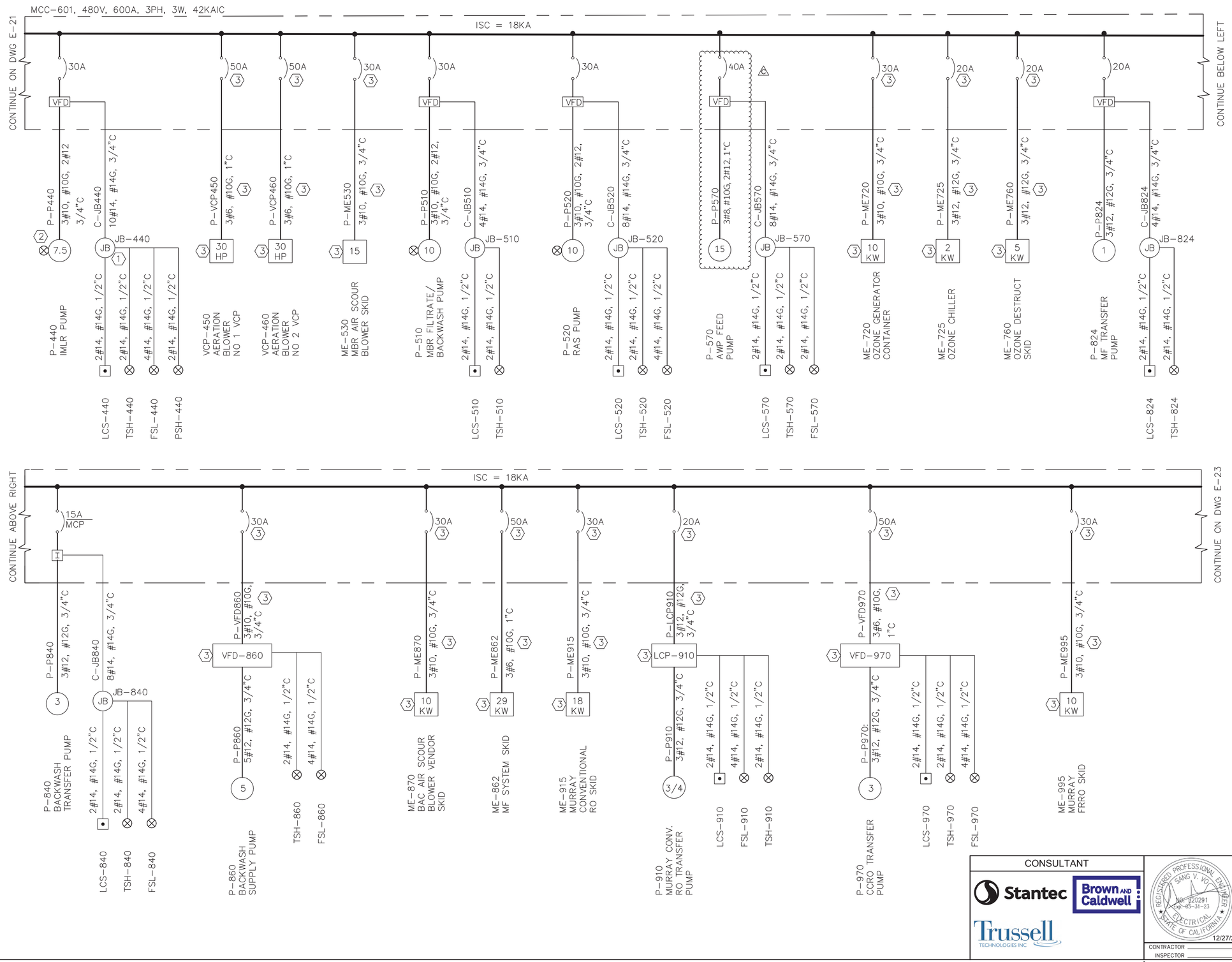

KEY NOTES

1. CIRCUITS BEYOND EQUIPMENT J-BOXES TO ASSOCIATED EQUIPMENT AND DEVICES ARE NOT ROUTED ON THE PLAN DRAWINGS. CONTRACTOR SHALL PROVIDE AS SHOWN AND FIELD ROUTE AS REQUIRED. EACH CONDUIT SHALL BE TAGGED PER GUIDELINE ON DWG E-01. TYPICAL.
2. PROVIDE 2#12 WITH POWER CONDUIT FOR MOTOR SPACE HEATER, TYPICAL FOR ALL MOTORS 5HP AND ABOVE.
3. CONTRACTOR SHALL VERIFY CIRCUIT BREAKER SIZING FOR VENDOR PACKAGED EQUIPMENT. UPDATE CIRCUIT AS REQUIRED BASED ON THE ACTUAL FLA OF EQUIPMENT PER NEC.

SINGLE LINE DIAGRAM - 2

E-22

CENTRAL AREA SMALL-SCALE FACILITY
ELECTRICAL
SINGLE LINE DIAGRAM - 2

CITY OF SAN DIEGO, CALIFORNIA
ENGINEERING AND CAPITAL PROJECTS DEPARTMENT
SHEET 125 OF 264 SHEETS

WBS B-21151

CONSULTANT: Stantec, Brown AND Caldwell, Trussell TECHNOLOGIES INC

REGISTERED PROFESSIONAL ENGINEER SANG V. VO No. E20291 Exp. 06-30-23 ELECTRICAL STATE OF CALIFORNIA 12/27/22

APPROVED: FOR CITY ENGINEER ALICE ALTES, PRINT DCE NAME — DATE 10/13/2022 — RCE# C68286

DESCRIPTION	BY	APPROVED	DATE	FILMED
ORIGINAL	BC		10/22	
6 ADDENDUM C	BC		12/22	

SUBMITTED BY: JOSEPH QUICHO, PROJECT MANAGER
CHECKED BY: MICHAEL VIOLANTE, PROJECT ENGINEER
CCS27 COORDINATE
CCS83 COORDINATE
DRAWING NO. 0100179-125-D — E19

CONTRACTOR
INSPECTOR
NTP DATE
NOC DATE

6 HP, BREAKER SIZE, CABLES AND CONDUITS FOR P570 REVISED.

ADDENDUM C

FILENAME: CASSF-E-22.DWG

21'-8"

260 IN.

20 IN. (1)

90 IN.

	SECTION 1	SECTION 2	SECTION 3	SECTION 4	SECTION 5	SECTION 6	SECTION 7	SECTION 8	SECTION 9	SECTION 10	SECTION 11	SECTION 12	SECTION 13
A	1A POWER MONITOR	2A VCP-200 AIR COMPRESSOR VCP	3A P-360 BNR FEED PUMP (VFD)	4A P-430 ML PUMP (VFD)	5A VCP-450 AERATION BLOWER 1 VCP	6A P-520 RAS PUMP (VFD)	7A ME-720 OZONE CONTAINER	8A P-840 BACKWASH TRANSFER PUMP	9A LCP-910 MURRAY RO TRANSFER PUMP	10A LCP-1000 SAN VICENTE RO TRANSFER PUMP	11A P-1080 CIP FILL PUMP	12A AC-651 AC UNIT 1	13A SPARE 30A BREAKER
B													
C		2C VCP-240 PLANT DRAIN PUMP VCP			5C VCP-460 AERATION BLOWER 2 VCP		7C ME-725 OZONE CHILLER		9C VFD-970 CCRO TRANSFER PUMP VFD	10C ME-1005 SAN VICENTE CONVL RO SKID		12C AC-652 AC UNIT 2	13C SPARE 60A BREAKER
D	1D SURGE PROTECTIVE DEVICE							8D P-860 BACKWASH SUPPLY PUMP			11E MPC-1300 CHEM FILL AREA MPC		
E		2E P-350 BLEND TANK MIXING PUMP			5E VCP-530 MBR AIR SCOUR BLOWER VCP		7E ME-760 OZONE DESTRUCT SKID		9E ME-995 MURRAY FFRO SKID	10E WH-1060 RO CIP TANK HEATER		12E 120V PNLBD-603 VIA XFMR-603	13E SPARE SIZE 1 STARTER
F	1F MCC-601 MAIN BREAKER							8F ME-870 BAC AIR SCOUR BLOWER SKID			11F SPACE		
G			3G MXR-401 ANOXIC ZONE 1 MIXER	4G P-440 IMLR PUMP (VFD)	5G P-510 MBR FILTRATE/ BACKWASH PUMP (VFD)	6G P-570 AWP FEED PUMP (VFD)	7G P-824 MF TRANSFER PUMP (VFD)		9G P-1035 CCRO PERMEATE PUMP	10G P-1065 RO CIP PUMP (VFD)	11G P-1085 RO FLUSH PUMP (VFD)	12G 120V PNLBD-604 VIA XFMR-604	
H		2H VCP-371 PRETREATMENT STRAINER VCP						8H ME-862 MF SYSTEM SKID					13E SPACE
J												12J VCP-260 STORM DRAIN DRAIN PUMP VCP	
K		2K MXR-400 DEOX TANK MIXER	3K MXR-402 ANOXIC ZONE 2 MIXER					8K ME-915 MURRAY CONVENTIONAL RO SKID	9K LCP-990 FFRO TRANSFER PUMP				
L												12L SPARE 20A BREAKER	
M									9M SPACE				

MCC-601 ELEVATION

KEY NOTES

1 PROVIDE MCC WITH 20" DEEP SECTION. TYPICAL

CASSF MCC-601 LOAD SUMMARY, 480V, 500A

LOAD DESCRIPTION	KV	MOTOR HP	CONNECTED AMPS	OPERATING (NOTE 1)	LOAD FACTOR	DEMAND AMPS	REMARKS
VCP-200 ROTARY SCREW COMPRESSOR	0.48	21.0	27.0	100%	80%	21.6	
VCP-240 PLANT DRAIN SUMP PUMPS	0.48	10.0	14.0	50%	80%	5.6	(2) 5HP, 1 STANDBY
P-350 BLEND TANK MIXING PUMP	0.48	1.5	3.0	100%	80%	2.4	
VCP-371 SELF CLEANING STRAINERS	0.48	0.5	1.1	50%	80%	0.4	(2) 1/4HP, 1 STANDBY
MXR-400 DEOX TANK MIXER	0.48	5.0	7.6	100%	80%	6.1	
P-360 BNR FEED PUMP	0.48	5.0	7.6	100%	80%	6.1	
MXR-401 ANOXIC ZONE 1 MIXER	0.48	3.0	4.8	100%	80%	3.8	
MXR-402 ANOXIC ZONE 2 MIXER	0.48	3.0	4.8	100%	80%	3.8	
(C) P-430 ML PUMP	0.48	30.0	40.0	100%	80%	32.0	
P-440 IMLR PUMP	0.48	7.5	11.0	100%	80%	8.8	
VCP-450 AERATION BLOWER 1	0.48	30.0	40.0	100%	80%	32.0	
VCP-450 AERATION BLOWER 2	0.48	30.0	40.0	0%	80%	0.0	STANDBY
ME-530 MBR AIR SCOUR BLOWER	0.48	15.0	21.0	100%	80%	16.8	
P-510 MBR FILTRATE / BACKWASH PUMP	0.48	10.0	14.0	100%	80%	11.2	
P-520 RAS PUMP	0.48	10.0	14.0	100%	80%	11.2	
(C) P-570 AWP FEED PUMP	0.48	15.0	21.0	100%	80%	16.8	
ME-720 OZONE CONTAINER	0.48		13.4	100%	80%	10.7	10KW
ME-725 OZONE CHILLER	0.48		2.7	100%	80%	2.1	2KW
ME-760 OZONE DESTRUCT SKID	0.48		6.7	100%	80%	5.4	5KW
P-824 MF TRANSFER PUMP	0.48	1.0	2.1	100%	80%	1.7	
P-840 BACKWASH TRANSFER PUMP	0.48	3.0	4.8	100%	80%	3.8	
VFD-860 BACKWASH SUPPLY PUMP	0.48	5.0	7.6	100%	80%	6.1	
ME-870 BAC AIR SCOUR BLOWER	0.48		13.4	100%	80%	10.7	10KW
ME-862 MF SYSTEM SKID	0.48		34.9	100%	80%	27.9	29KW
ME-915 MURRAY CONVENTIONAL RO SKID	0.48		21.7	100%	80%	17.4	18KW
LCP-910 MURRAY RO TRANSFER PUMP	0.48	0.8	1.6	100%	80%	1.3	
VFD-970 CCRO TRANSFER PUMP	0.48	3.0	4.8	100%	80%	3.8	
ME-995 MURRAY FRRO SKID	0.48		13.4	100%	80%	10.7	10KW
P-1035 CCRO PERMEATE PUMP	0.48	0.5	1.1	100%	80%	0.9	
LCP-990 FFRO TRANSFER PUMP	0.48	3.0	4.8	100%	80%	3.8	
LCP-1000 SAN VICENTE TRANSFER PUMP	0.48	0.8	1.6	100%	80%	1.3	
ME-1005 SAN VICENTE CONVL RO	0.48		13.4	100%	80%	10.7	10KW
WH-1060 RO CIP TANK HEATER	0.48		24.0	50%	80%	9.6	20KW
P-1065 RO CIP PUMP	0.48	7.5	11.0	50%	80%	4.4	VFD
P-1080 RO CIP FILL PUMP	0.48	1.0	2.1	50%	80%	0.8	
MPC-1300 15KVA CHEM FILL MPC	0.48		18.0	100%	50%	9.0	15KVA
P-1085 RO FLUSH PUMP	0.48	7.5	11.0	100%	80%	8.8	VFD
AC-651 EEE AC UNIT 1	0.48		6.0	100%	80%	4.8	5KW
AC-652 EEE AC UNIT 2	0.48		6.0	100%	80%	4.8	5KW
XFMR-603 37.5KVA TRANSFORMER 1	0.48		45.1	100%	50%	22.6	37.5KVA
XFMR-604 37.5KVA TRANSFORMER 2	0.48		45.1	100%	50%	22.6	37.5KVA
VCP-260 STORMWATER DRAIN SUMP PUMP	0.48	3.0	4.8	100%	80%	3.8	
Subtotal Loads at Service Voltage			681.9			448.5	
10% Spare Ampacity			68.2			44.8	
Total Loads at Service Voltage			750.1			493.3	

(C) (C)

NOTES:

1. LOAD LESS THAN 100% IS NON-CONTINUOUS LOAD OR STANDBY LOAD.

SINGLE LINE DIAGRAM - 4

E-24

CENTRAL AREA SMALL-SCALE FACILITY

ELECTRICAL

SINGLE LINE DIAGRAM - 4

CITY OF SAN DIEGO, CALIFORNIA
ENGINEERING AND CAPITAL PROJECTS DEPARTMENT
SHEET 127 OF 264 SHEETS

WBS B-21151

CONSULTANT

Stantec

Brown AND Caldwell

Trussell TECHNOLOGIES INC

REGISTERED PROFESSIONAL ENGINEER SANG V. VO No. E20291 Exp. 03-31-23 ELECTRICAL STATE OF CALIFORNIA

12/27/22

APPROVED: FOR CITY ENGINEER — DATE 10/13/2022
ALICE ALTES — PRINT DCE NAME — RCE# C68286

SUBMITTED BY: JOSEPH QUICHO, PROJECT MANAGER

CHECKED BY: MICHAEL VIOLANTE, PROJECT ENGINEER

DESCRIPTION	BY	APPROVED	DATE	FILMED
ORIGINAL	BC		10/22	
(C) ADDENDUM C	BC		12/22	

CCS27 COORDINATE

CCS83 COORDINATE

DRAWING NO. 0100179-127-D

E21

CONTRACTOR — NTP DATE

INSPECTOR — NOC DATE

(C) LOAD SUMMARY UPDATED WITH CHANGES FOR P-430 AND P-570.

ADDENDUM C

FILENAME: CASSF-E-24.DWG

December 29, 2022
Pure Water Program (PWP) Central Area Small Scale Facility

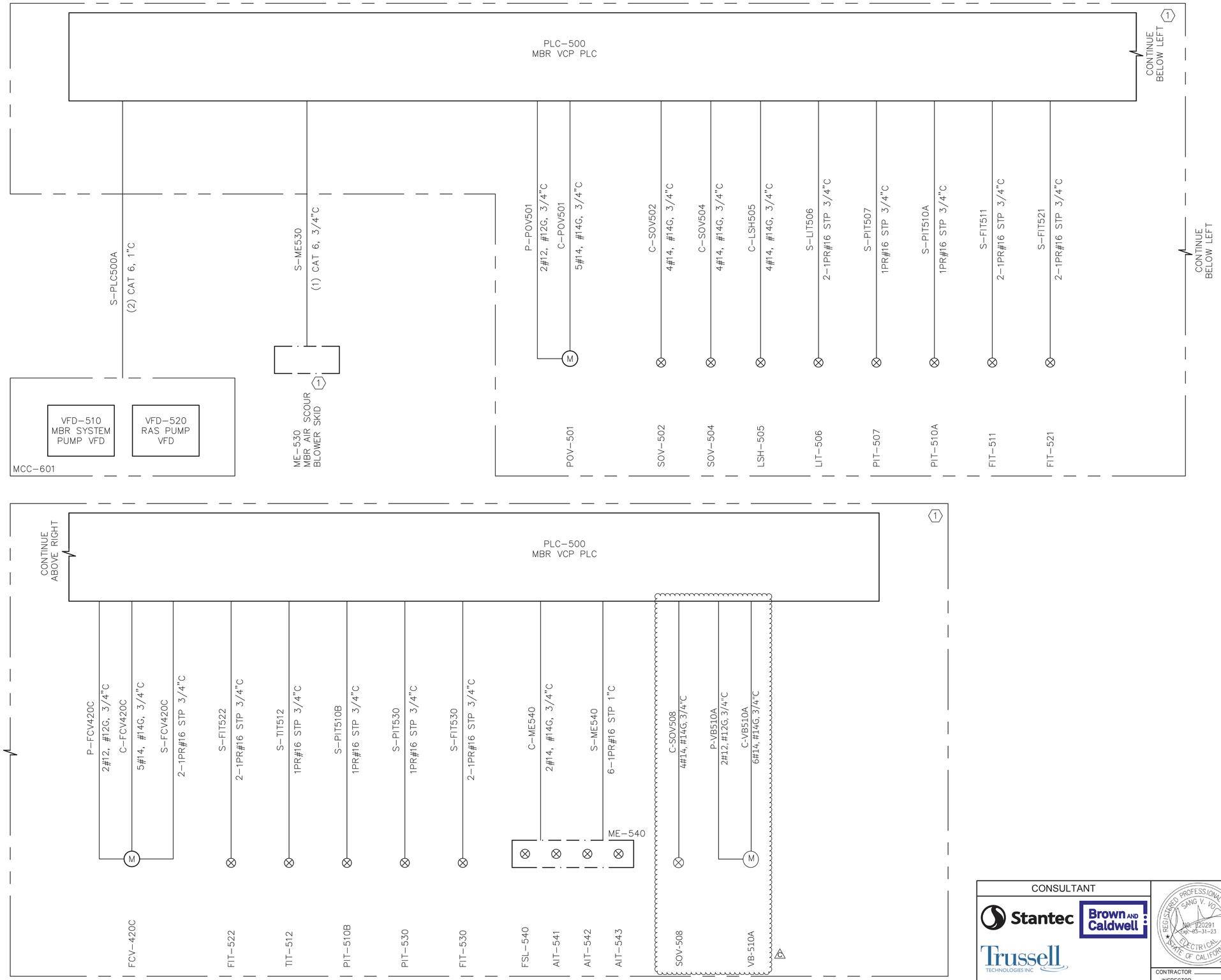

GENERAL NOTES:

1. SEE INSTRUMENT AND CONTROL DRAWINGS FOR P&ID.
2. TO AVOID TOO MANY PENETRATIONS INTO ELECTRICAL/CONTROL PANELS. CONTRACTOR CAN FURTHER COMBINE POWER/CONTROL/SIGNAL CIRCUITS 120V AND BELOW. COMBINED CIRCUITS SHALL BE PER NEC DERATING AND FILL REQUIREMENTS. ALL CONDUITS SHALL BE TAGGED PER GUIDELINES ON DWG E-01.
3. SEE 120V PANEL SCHEDULES FOR DWG E-61 FOR 120V POWER SOURCE.

KEY NOTES

1 VENDOR PACKAGED EQUIPMENT SHIPPED LOOSE FOR CONTRACTOR INSTALLATION AND WIRING. CONTRACTOR SHALL REFER TO VENDOR DRAWINGS FOR FINAL WIRING REQUIREMENTS.

CONTROL RISER DIAGRAM - 10

E-41

CENTRAL AREA SMALL-SCALE FACILITY

ELECTRICAL

CONTROL RISER DIAGRAM - 10

CITY OF SAN DIEGO, CALIFORNIA
ENGINEERING AND CAPITAL PROJECTS DEPARTMENT
SHEET 139 OF 264 SHEETS

WBS B-21151

CONSULTANT

Stantec
Brown AND Caldwell
Trussell TECHNOLOGIES INC

REGISTERED PROFESSIONAL ENGINEER SANG V. VO No. E20291 Exp. 06-31-23 ELECTRICAL STATE OF CALIFORNIA
12/27/22

APPROVED: FOR CITY ENGINEER — DATE 10/13/2022
ALICE ALTES — PRINT DCE NAME — RCE# C68286

SUBMITTED BY: JOSEPH QUICHO, PROJECT MANAGER
CHECKED BY: MICHAEL VIOLANTE, PROJECT ENGINEER
CCS27 COORDINATE
CCS83 COORDINATE

DESCRIPTION	BY	APPROVED	DATE	FILMED
ORIGINAL	BC		10/22	
6 ADDENDUM C	BC		12/22	

CONTRACTOR
INSPECTOR
NTP DATE
NOC DATE

DRAWING NO. 0100179-139-D
E33

6 POWER FEEDS ADDED FOR VB-510A AND SOV-508.

ADDENDUM C

FILENAME: CASSF-E-41.DWG

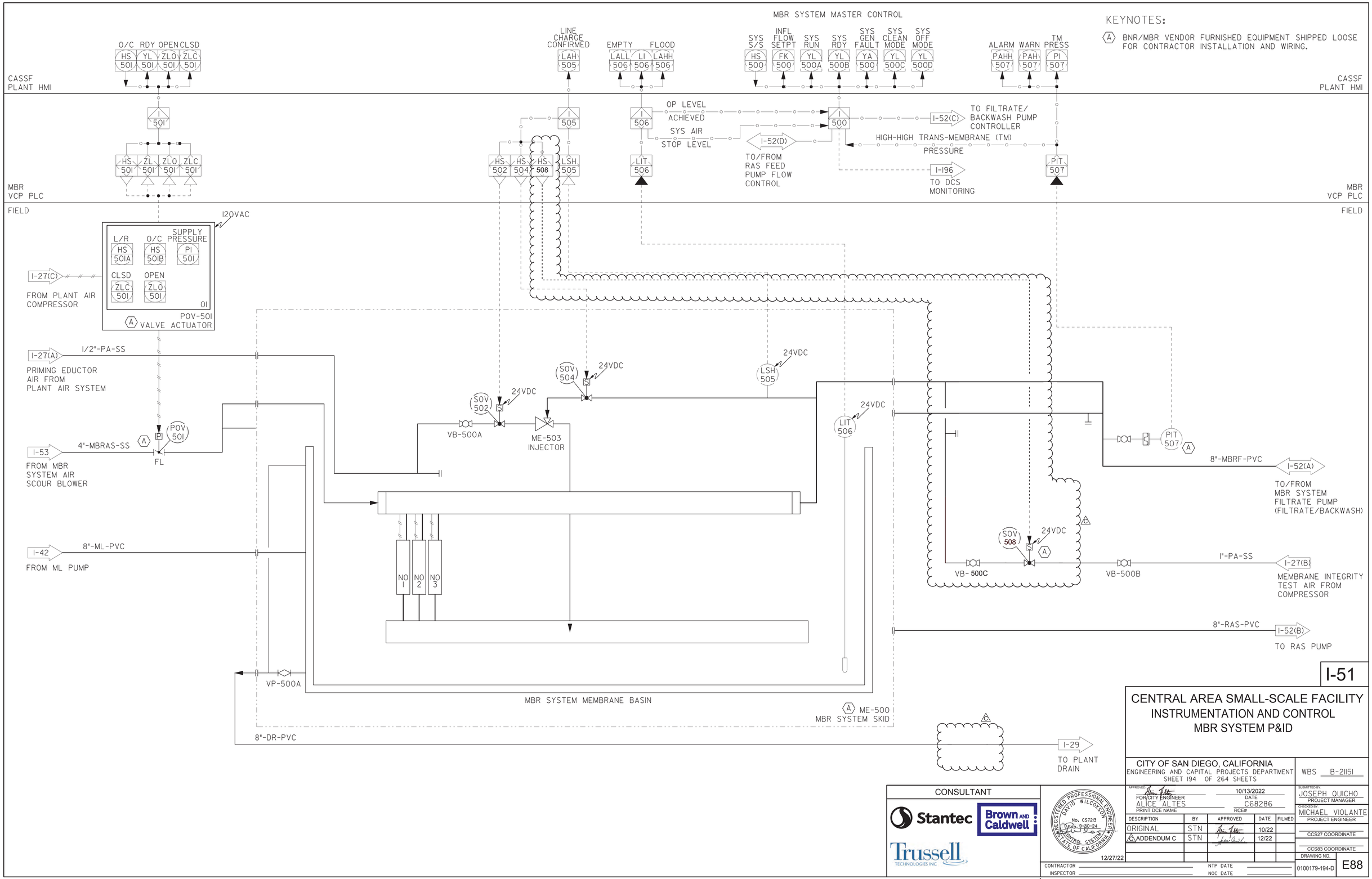

I-51

CENTRAL AREA SMALL-SCALE FACILITY
INSTRUMENTATION AND CONTROL
MBR SYSTEM P&ID

CITY OF SAN DIEGO, CALIFORNIA
ENGINEERING AND CAPITAL PROJECTS DEPARTMENT
SHEET 194 OF 264 SHEETS

WBS B-21151

APPROVED: FOR/CITY ENGINEER — DATE 10/13/2022
ALICE ALTES — PRINT DCE NAME — RCE# C68286

SUBMITTED BY: JOSEPH QUICHO — PROJECT MANAGER
CHECKED BY: MICHAEL VIOLANTE — PROJECT ENGINEER

DESCRIPTION	BY	APPROVED	DATE	FILMED
ORIGINAL	STN		10/22	
(C) ADDENDUM C	STN		12/22	

CCS27 COORDINATE
CCS83 COORDINATE

CONSULTANT: Stantec, Brown AND Caldwell, Trussell TECHNOLOGIES INC

REGISTERED PROFESSIONAL ENGINEER — DAVID WILCOXSON — No. CS7213 — Exp. 3-30-24 — CONTROL SYSTEM — STATE OF CALIFORNIA
12/27/22

CONTRACTOR
INSPECTOR
NTP DATE
NOC DATE

DRAWING NO. 0100179-194-D
E88

(C) REMOVED REDUNDANT VALVE FROM DRAWING AND ADDED 1-INCH SOLENOID VALVE AND ISOLATION VALVE

ADDENDUM C

MBR SYSTEM P&ID

FILENAME: CASSF-I-51.DWG

December 29, 2022
Pure Water Program (PWP) Central Area Small Scale Facility

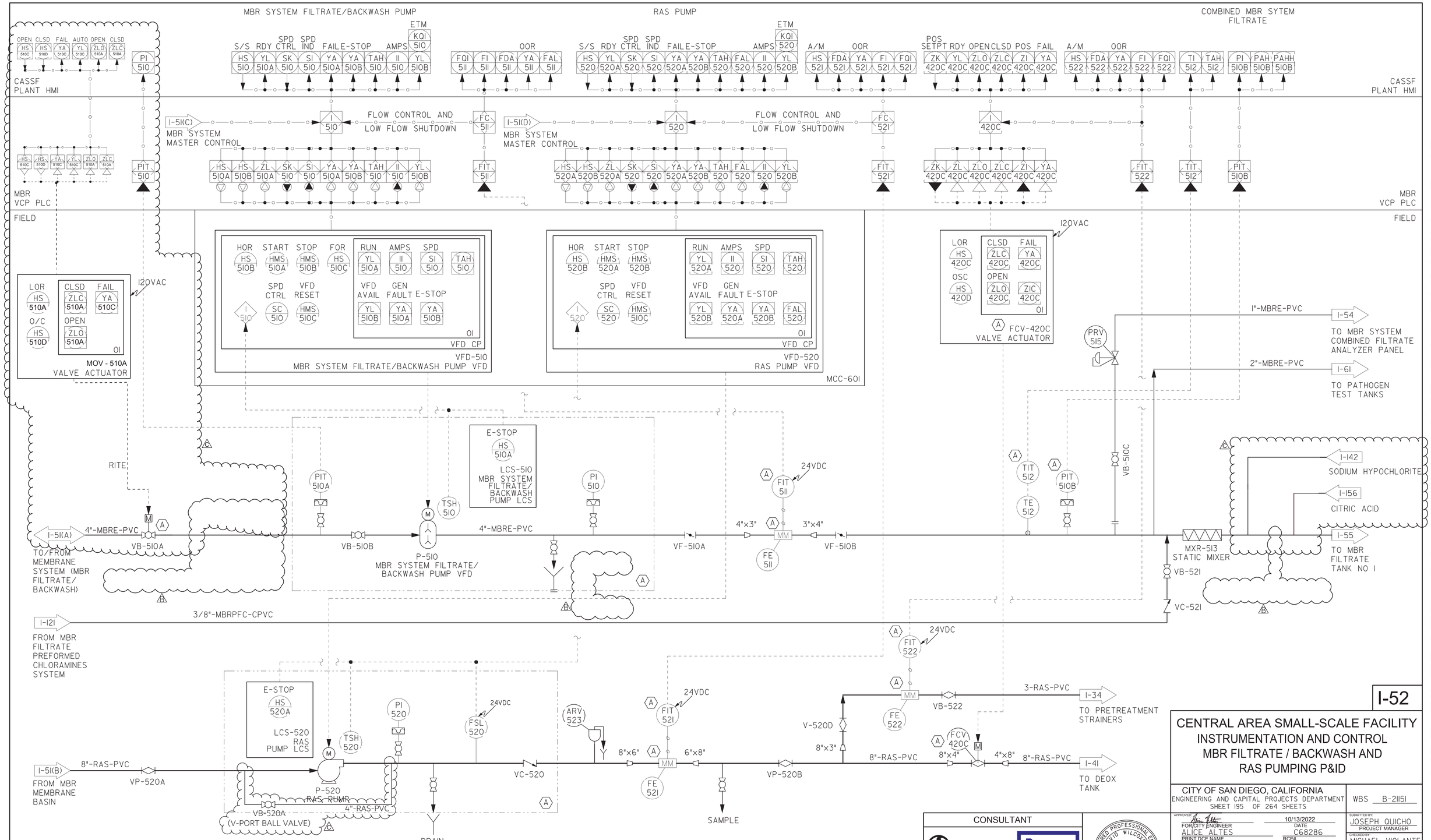

MBR FILTRATE / BACKWASH AND RAS PUMPING P&I

I-52

CENTRAL AREA SMALL-SCALE FACILITY INSTRUMENTATION AND CONTROL MBR FILTRATE / BACKWASH AND RAS PUMPING P&ID

CITY OF SAN DIEGO, CALIFORNIA
ENGINEERING AND CAPITAL PROJECTS DEPARTMENT
SHEET 195 OF 264 SHEETS

WBS B-21151

APPROVED: FOR/CITY ENGINEER ALICE ALTES — DATE 10/13/2022 — RCE# C68286
SUBMITTED BY: JOSEPH QUICHO, PROJECT MANAGER
CHECKED BY: MICHAEL VIOLANTE, PROJECT ENGINEER
CCS27 COORDINATE
CCS83 COORDINATE

DESCRIPTION	BY	APPROVED	DATE	FILMED
ORIGINAL	STN		10/22	
A ADDENDUM B	STN		12/22	
C ADDENDUM C	STN		12/22	

REGISTERED PROFESSIONAL ENGINEER DAVID WILCOXSON No. CS7213 Exp. 9-30-24 CONTROL SYSTEMS STATE OF CALIFORNIA 12/27/22

CONSULTANT: Stantec, Brown AND Caldwell, Trussell TECHNOLOGIES INC

CONTRACTOR
INSPECTOR
NTP DATE
NOC DATE

DRAWING NO. 0100179-195-D — E89

KEYNOTES:

(A) BNR/MBR VENDOR FURNISHED EQUIPMENT SHIPPED LOOSE FOR CONTRACTOR INSTALLATION AND WIRING.

(C) REVISED VALVE VB-510A TO ACTUATED VALVE AND RELOCATED SHC AND CA INJECTION POINT. RAS PUMP RECIRC LINE ADDED.

(B) DELETED THE AREA SEGMENT BREAKER

FILENAME: CASSF-I-52.DWG

December 29, 2022
Pure Water Program (PWP) Central Area Small Scale Facility

ADDENDUM C

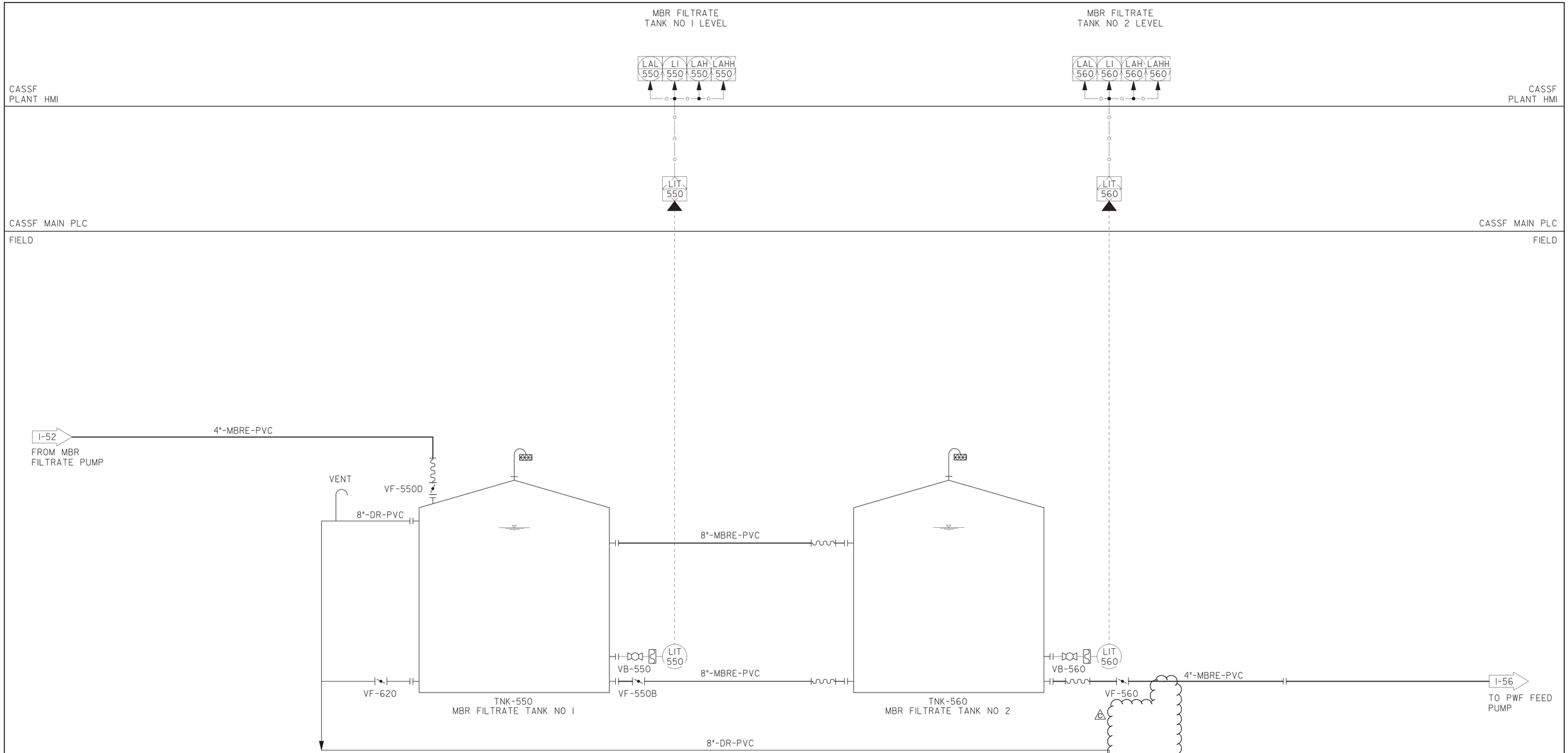

MBR FILTRATE TANKS P&ID

I-55

CENTRAL AREA SMALL-SCALE FACILITY
INSTRUMENTATION AND CONTROL
MBR FILTRATE TANKS P&ID

CITY OF SAN DIEGO, CALIFORNIA
ENGINEERING AND CAPITAL PROJECTS DEPARTMENT
SHEET 198 OF 264 SHEETS

WBS B-21151

APPROVED: FOR CITY ENGINEER — DATE 10/13/2022
ALICE ALTES — PRINT DCE NAME — RCE# C68286

SUBMITTED BY: JOSEPH QUICHO, PROJECT MANAGER
CHECKED BY: MICHAEL VIOLANTE, PROJECT ENGINEER

DESCRIPTION	BY	APPROVED	DATE	FILMED
ORIGINAL	STN		10/22	
6 ADDENDUM C	STN		12/22	

CONSULTANT: Stantec, Brown AND Caldwell, Trussell TECHNOLOGIES INC

REGISTERED PROFESSIONAL ENGINEER — DAVID WILCOXSON — No. C57213 — EXP. 9-30-24 — CONTROL SYSTEM — STATE OF CALIFORNIA — 12/27/22

CONTRACTOR
INSPECTOR
NTP DATE
NOC DATE

CCS27 COORDINATE
CCS83 COORDINATE
DRAWING NO. 0100179-198-D
E92

6 DELETED REDUNDANT VALVE.

ADDENDUM C

FILENAME: CASSF-I-55.DWG

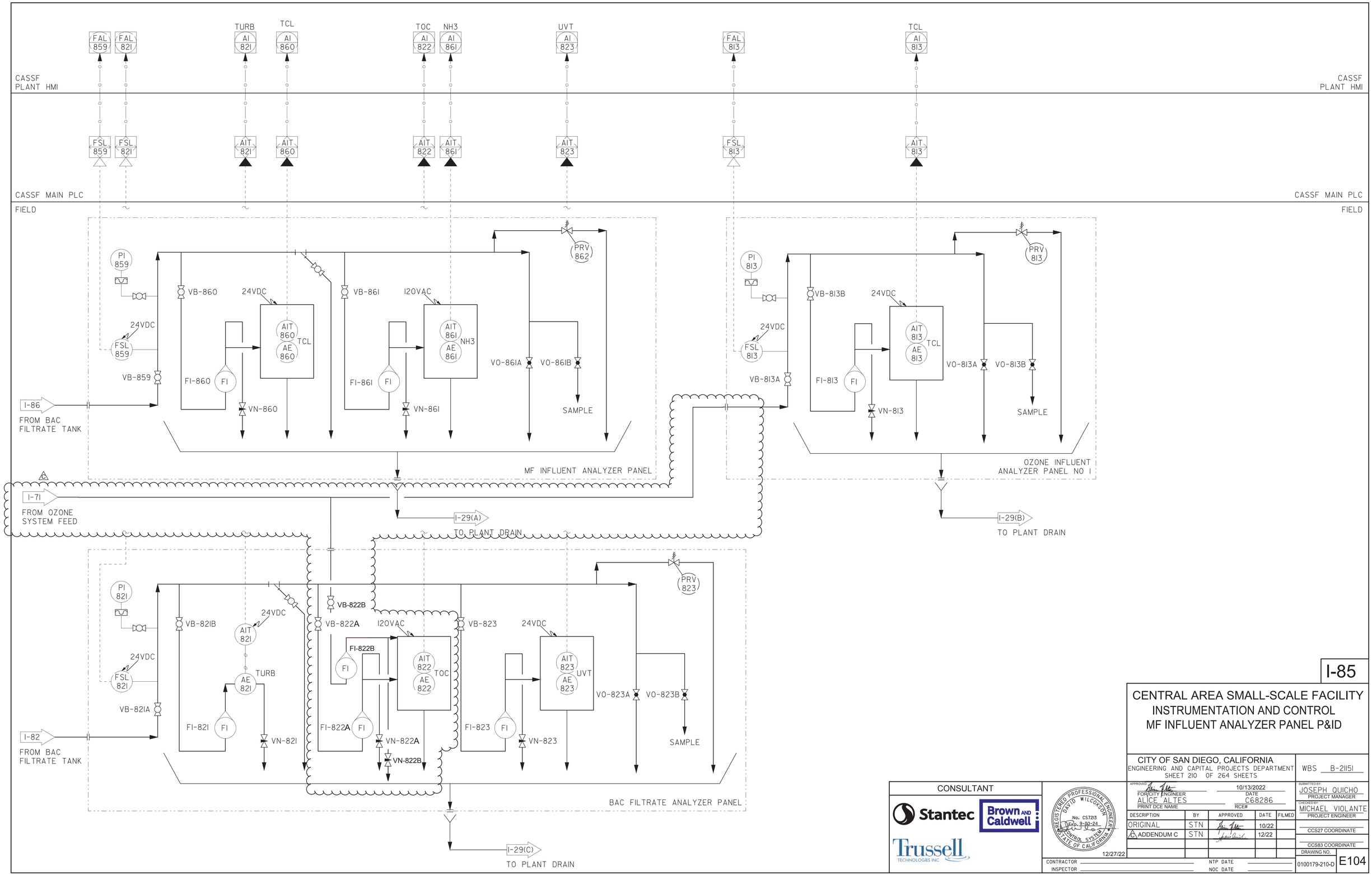

MF INFLUENT ANALYZER PANEL P&ID

I-85

CENTRAL AREA SMALL-SCALE FACILITY
INSTRUMENTATION AND CONTROL
MF INFLUENT ANALYZER PANEL P&ID

CITY OF SAN DIEGO, CALIFORNIA
ENGINEERING AND CAPITAL PROJECTS DEPARTMENT
SHEET 210 OF 264 SHEETS

WBS B-21151

CONSULTANT

Stantec
Brown AND Caldwell
Trussell TECHNOLOGIES INC

REGISTERED PROFESSIONAL ENGINEER DAVID WILCOXSON No. CS723 Exp. 9-30-24 CONTROL SYSTEM STATE OF CALIFORNIA
12/27/22

APPROVED: FOR/CITY ENGINEER ALICE ALTES — DATE 10/13/2022 — RCE# C68286
PRINT DCE NAME

SUBMITTED BY: JOSEPH QUICHO — PROJECT MANAGER
CHECKED BY: MICHAEL VIOLANTE — PROJECT ENGINEER

DESCRIPTION	BY	APPROVED	DATE	FILMED
ORIGINAL	STN		10/22	
C ADDENDUM C	STN		12/22	

CCS27 COORDINATE
CCS83 COORDINATE
DRAWING NO. 0100179-210-D E104

CONTRACTOR
INSPECTOR
NTP DATE
NOC DATE

FILENAME: CASSF-I-85.DWG

C ADDED PROVISIONS FOR AE/AIT 822 TOC TO ACCOMODATE DUAL-STREAM ANALYSIS OF OZONE FEED AND BAC FILTRATE

ADDENDUM C

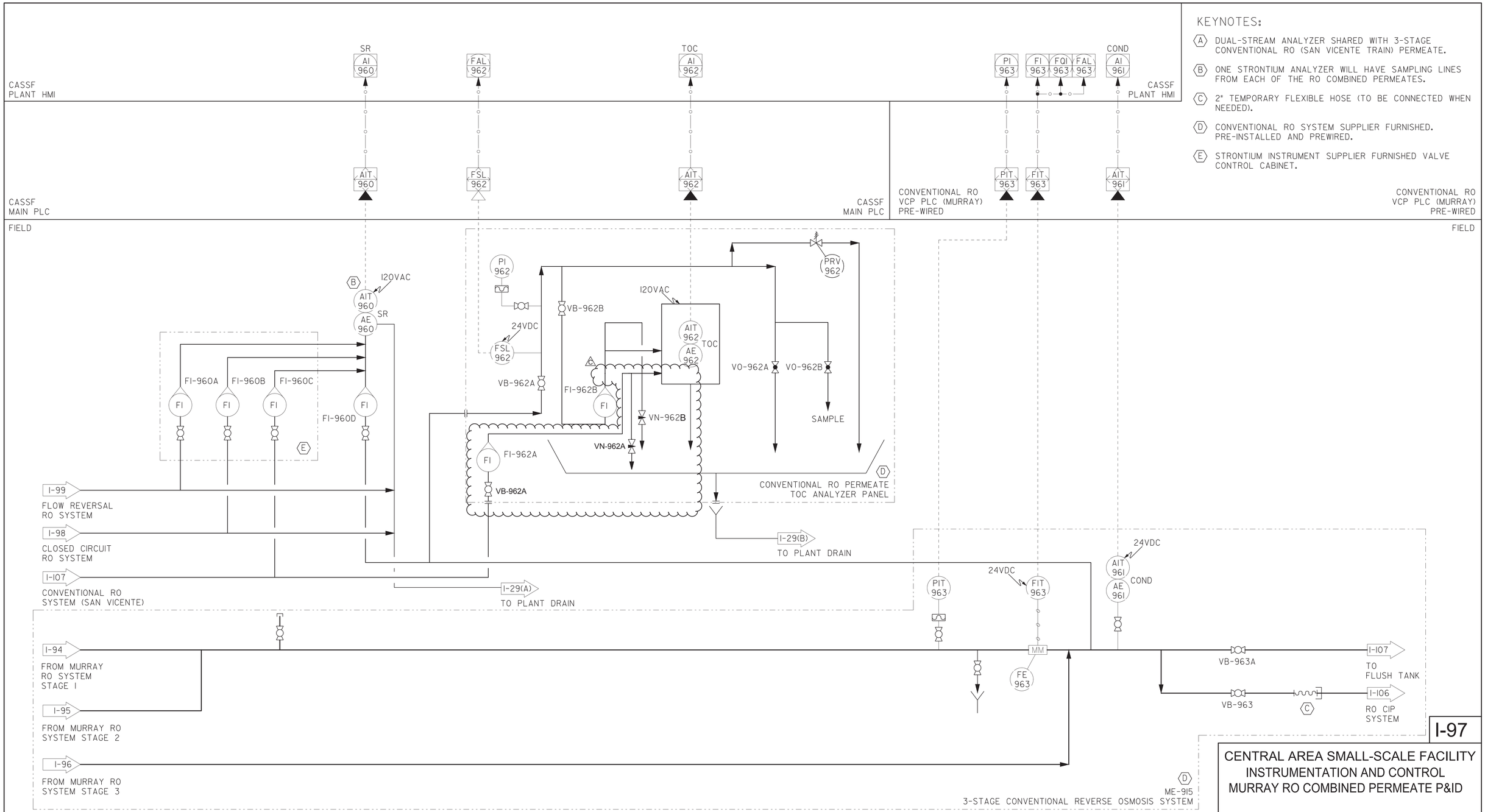

KEYNOTES:

- (A) DUAL-STREAM ANALYZER SHARED WITH 3-STAGE CONVENTIONAL RO (SAN VICENTE TRAIN) PERMEATE.
- (B) ONE STRONTIUM ANALYZER WILL HAVE SAMPLING LINES FROM EACH OF THE RO COMBINED PERMEATES.
- (C) 2" TEMPORARY FLEXIBLE HOSE (TO BE CONNECTED WHEN NEEDED).
- (D) CONVENTIONAL RO SYSTEM SUPPLIER FURNISHED. PRE-INSTALLED AND PREWIRED.
- (E) STRONTIUM INSTRUMENT SUPPLIER FURNISHED VALVE CONTROL CABINET.

MURRAY RO COMBINED PERMEATE P&ID

I-97

CENTRAL AREA SMALL-SCALE FACILITY
INSTRUMENTATION AND CONTROL
MURRAY RO COMBINED PERMEATE P&ID

CITY OF SAN DIEGO, CALIFORNIA
ENGINEERING AND CAPITAL PROJECTS DEPARTMENT
SHEET 221 OF 264 SHEETS

WBS B-21151

CONSULTANT

Stantec
Brown AND Caldwell
Trussell TECHNOLOGIES INC

REGISTERED PROFESSIONAL ENGINEER DAVID WILCOXSON No. CS7213 Exp. 8-30-24 CONTROL SYSTEM STATE OF CALIFORNIA
12/27/22

APPROVED: FOR/CITY ENGINEER ALICE ALTES PRINT DCE NAME — 10/13/2022 DATE — C68286 RCE#

SUBMITTED BY: JOSEPH QUICHO PROJECT MANAGER

CHECKED BY: MICHAEL VIOLANTE PROJECT ENGINEER

DESCRIPTION	BY	APPROVED	DATE	FILMED
ORIGINAL	STN		10/22	
A ADDENDUM C	STN		12/22	

CCS27 COORDINATE

CCS83 COORDINATE

DRAWING NO. 0100179-221-D E115

CONTRACTOR
INSPECTOR
NTP DATE
NOC DATE

A REVISED ROUTING OF SAN VICENTE RO PERMEATE SAMPLE LINE TO DUAL-STREAM TOC ANALYZER AE/AIT 962

ADDENDUM C

FILENAME: CASSF-I-97.DWG

December 29, 2022
Pure Water Program (PWP) Central Area Small Scale Facility

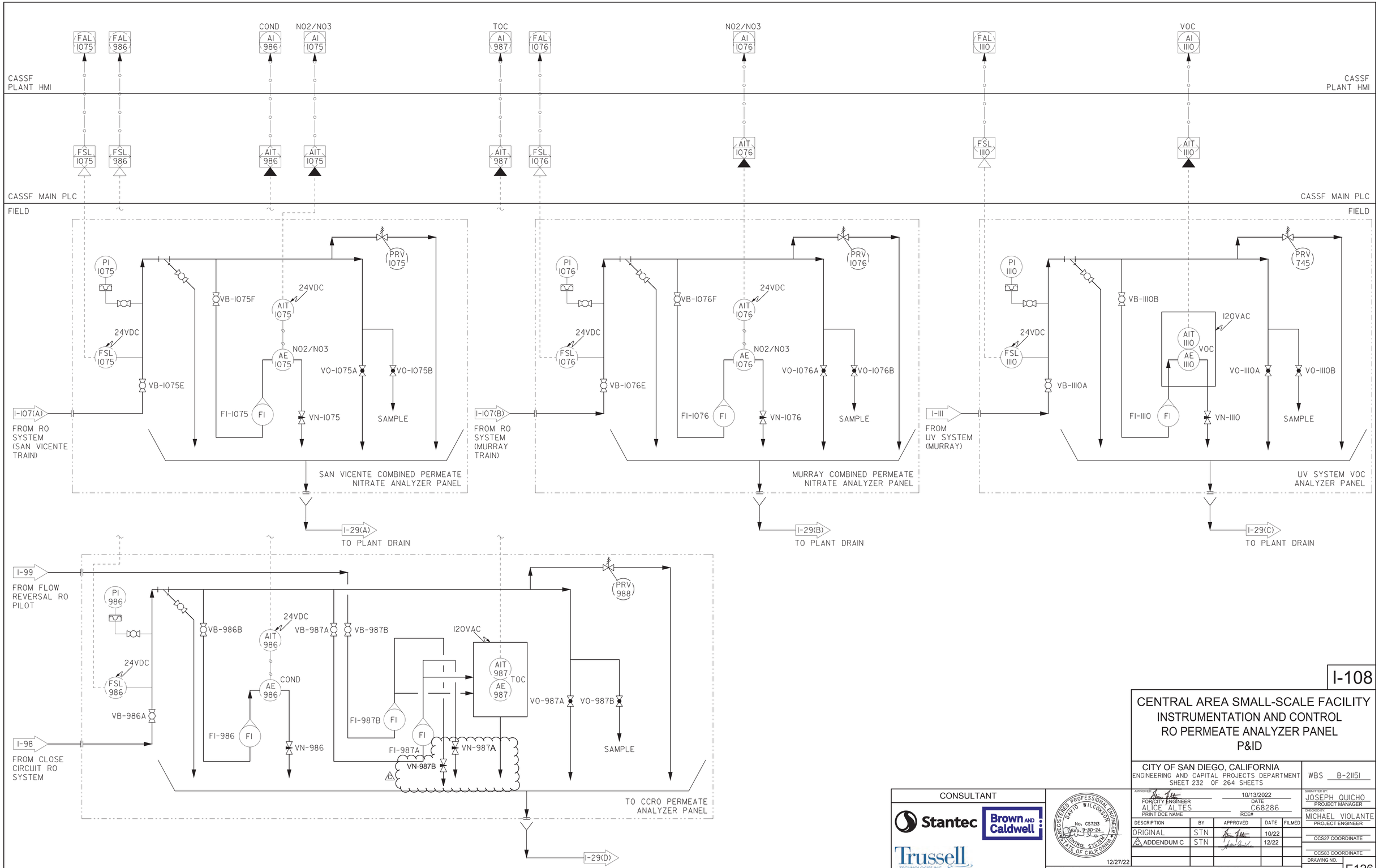

RO PERMEATE ANALYZER PANEL P&ID

I-108

CENTRAL AREA SMALL-SCALE FACILITY
INSTRUMENTATION AND CONTROL
RO PERMEATE ANALYZER PANEL
P&ID

CITY OF SAN DIEGO, CALIFORNIA
ENGINEERING AND CAPITAL PROJECTS DEPARTMENT
SHEET 232 OF 264 SHEETS

WBS B-21151

CONSULTANT

Stantec
Brown AND Caldwell
Trussell TECHNOLOGIES INC

REGISTERED PROFESSIONAL ENGINEER DAVID WILCOXSON No. CS7213 Exp. 9-30-24 CONTROL SYSTEMS STATE OF CALIFORNIA
12/27/22

APPROVED: FOR/CITY ENGINEER ALICE ALTES, PRINT DCE NAME — DATE 10/13/2022 — RCE# C68286

SUBMITTED BY: JOSEPH QUICHO, PROJECT MANAGER
CHECKED BY: MICHAEL VIOLANTE, PROJECT ENGINEER
CCS27 COORDINATE
CCS83 COORDINATE

DESCRIPTION	BY	APPROVED	DATE	FILMED
ORIGINAL	STN		10/22	
△C ADDENDUM C	STN		12/22	

CONTRACTOR
INSPECTOR
NTP DATE
NOC DATE

DRAWING NO. 0100179-232-D E126

△C ADDITION OF NEEDLE VALVE ON FRRO PERMEATE SAMPLE LINE DRAIN

ADDENDUM C

FILENAME: CASSF-I-108.DWG

City of San Diego

CITY CONTACT: Brittany Friedenreich, Senior Contract Specialist, Email: BFriedenreic@sandiego.gov
Phone No. (619) 533-3104

ADDENDUM D

e - Bidding

FOR

PURE WATER PROGRAM (PWP) CENTRAL AREA SMALL SCALE FACILITY

BID NO.:	**K-23-2119-DBB-3-C**
SAP NO. (WBS/IO/CC):	**B-21151**
CLIENT DEPARTMENT:	**2000**
COUNCIL DISTRICT:	**2**
PROJECT TYPE:	**BO, BI**

BID DUE DATE:

2:00 PM

JANUARY 12, 2023

CITY OF SAN DIEGO'S ELECTRONIC BIDDING SITE, PLANETBIDS

http://www.sandiego.gov/cip/bidopps/index.shtml

A. CHANGES TO CONTRACT DOCUMENTS

The following changes to the Contract Documents are hereby made effective as though originally issued with the bid package. Bidders are reminded that all previous requirements to this solicitation remain in full force and effect.

B. BIDDER's QUESTIONS

Q1. Page M-05, Key Note (19), please confirm Air Relief Valve sizes.

A1. Provide 1" Combination Air Valve for Wastewater.

Q2. After the contractor has proven that the chemical dosing system is operating properly please confirm that the owner will provide the chemical for the rest of the advanced water treatment testing.

A2. The Contractor is responsible for providing chemicals required for testing and proving the systems till Substantial Completion.

Q3. On Drawing M-24 the 4" PVC pipe that connects to the pump has a reducer that connects to the pumps: P-240, 250, and 260, but on Specification 43 25 40 2.01 calls for 4" discharge pipe diameters for the pumps. Please confirm that the pumps discharge pipe diameter is 4" and that the reducer on drawing M-24 is not needed.

A3. A reducer may or may not be needed depending on the pump discharge based on the actual pump selected. Bidder can choose to include or exclude the reducer based on the pump proposed.

Q4. Section 13 34 19-2.01A required the contractor to use candidate manufactures USA Shade or Aztec Tents. We have reached out to both for quotes and both say they will not quote the project. Aztec says they don't make what's required and USA Shade doesn't want to work on a project that has a PLA. They will also not supply a project that has a PLA. Please provide alternate suppliers that will perform on this project with a PLA or remove this work from the project scope.

A4. Per Section 13 34 19-2.01A the contractor may submit an or equal product that meets the contract specifications. Or equal products must be submitted no later than 5 working days after the NOI.

Q5. Item 3 in the Scope of Work (Attachment A), requires 50 Working Days for Project Acceptance. What work is allowed to occur during Project Acceptance? For example, are we allowed to perform Performance Testing and Facility Acceptance Testing during this period of time?

A5. The 440 working days includes 50 working days for Project Acceptance which includes Commissioning and Facility Acceptance Testing.

Q6. In discussions with the equipment suppliers we are seeing 14 week lead times on submittals for the equipment. Since the effort is so large for the submittals and the lead times are so long we are requesting a Limited NTP that allows us to move forward with critical submittals. The Limited NTP will also allow for payment of critical submittals so that the suppliers can get started ahead of the NTP.

A6. LNTP only allows for invoicing on bonds. The contractor may provide submittals for review once NOI has been issued, however bonds cannot be invoiced until LNTP is issued and equipment cannot be invoiced until NTP is issued.

Q7. Steel Structures Inc formally request approval for a bolt together modular tank design with field assembly, limited field welding, exterior paint touch-up and interior coating touch-up. This design would allow transportation to the jobsite in the fewest number of pieces as possible. By this minimizing the field labor required onsite. In so doing reduce the cost of the tank by utilizing shop labor rates in lieu of field labor rates.

A7. A bolt together modular steel tank design with field assembly will be accepted if all functionality of the specified tank are met.

Q8. The main process testing will run off the blended primary influent and effluent water from PLWTP. Please confirm the district will have a blending plan ready for the contractor at the time needed to begin the main unit process testing.

A8. Confirmed. A blending plan will be available before the start of the testing.

Q9. Section 01 50 00-2.01E requires the Contractor to provide Computer Service for the Owners Trailer. Since star link is not available yet, what speed of connectivity is required?
o Firewall brand requirements?
o Any special routing setup on network?
o Any vlan requirements for switches?
o Do you need VPN access?
o Switch brand requirements?
o Access point brand or configuration requirements?

A9. Provide internet services with maximum speed available from Starlink for Business Applications (which currently has a download speed of up to 350 mbps per their website). Note that two separate internet connections will be required - one for the Construction Trailer for the construction duration and the other in the Pre-Engineered Electrical Enclosure to be used during operation of CASSF. General requirements will be as specified in Section 40 95 10 and reproduced below.
o Firewall brand requirements? Per Section 40 95 10.2.05.E, Cisco Model ASA 5510 or approved equal
o Any special routing setup on network? Per Section 40 95 10.2.05.F, specific routing configuration requirements will be coordinated at the beginning of Contract.
o Do you need VPN access? Yes, per Section 40 95 10.2.05.
o Switch brand requirements? Cisco Catalyst 3850 Series per Section 40 95 10.2.05.C or approved equal
o Any vlan requirements for switches? Yes. Requirements of Section 40 95 10 2.05 C apply.
o Access point brand or configuration requirements? Cisco Aironet 1815i Access Point, or approved equal

Q10. Page 38 of the solicitation, Attachment C, section D(a) states that "The Bidder shall achieve the mandatory Subcontractor participation requirement or demonstrate GFE". Page 6 of the solicitation, NIB, Section 9.1 states that "The City has incorporated mandatory SLBE-ELBE subcontractor participation percentages....". Please confirm that the SLBE-ELBE is not mandatory and that with an acceptable GFE Contractors will be found to be responsive regardless of actual SLBE-ELBE participation percentage that is achieved.

A10. Please refer to the Solicitation page 7. The requirement is to meet the

SLBE-ELBE goals or submit GFE demonstrating the Bidder made a good faith effort to conduct outreach to include SLBE-ELBE Subcontractors as required.

Q11. The following is requested to be considered as "or equal" options for the Pathogen Pump 1 (P-630) and Blend Tank Mixing Pump (P-350) on the Central Area Small-Scale Facility project number K-23-2119-DBB-3: Pathogen Pump 1 (P-630): Grundfos 99463941 JP PS 16 187 A-A-BBVP 60 Hz; Blend Tank Mixing Pump (P-350): Aurora Model 651A Pump; These option will take the place of the Manufacturers listed in Specification Section 43 23 89.11. Please see attachment for more information on the or equals.

A11. These will be acceptable as equal products if they meet all the specification requirements. Or equal products must be submitted no later than 5 working days after the NOI.

Q12. Regarding P-1631 thru P-1634 (46 33 42.16), the spec calls for a minimum flow rate of .00004 GPH. That seems low. Will a minimum flow of 0.0007 GPH be acceptable?

A12. The Pump specs were already revised and reissued in Addendum C.

Q13. Regarding P-1441, P-1444, P-1446 & P-1447 (46 33 42.16), will PVDF Skid components such as valves and pipe fittings be acceptable instead of Alloy 20 components?

A13. PVDF Sch. 80 pipe and fittings and equivalent PVDF Valves are acceptable as an alternative for Sulfuric Acid application.

Q14. Regarding Specification Section 46 33 42.16, will non-metallic skid components, such as piping, fittings, and valves be acceptable?

A14. Yes, as long as the materials are compatible with the chemicals.

Q15. Regarding Specification Section 46 33 42.16, please provide MSDS information for the Antiscalant in order to determine chemical compatibility. Alternatively, confirmation that PVC/Viton are compatible materials with this chemical would suffice.

A15. PVC/Viton will be acceptable.

Q16. Regarding Specification Section 46 33 42.16, the specification indicates "hydraulically driven" pumps which are often synonymous with standard rotational motors. One of the specified brands for this application are driven by Stepper motors and not standard rotational motors. The Stepper motors pair with digital technology to provide precisely controlled stroke speeds that vary according to user preference (i.e. slow discharge strokes and fast intake strokes). Please clarify that the stepper motors are included in the "hydraulically driven" category as per the specification.

A16. Spec Section 46 33 42.16 was revised in Addendum C. Please refer to the updated specification.

Q17. Regarding P-350 (43 23 89.11), please provide official recognition of the Aurora 651A 4x4x7 pump (attached) as an "equal".

A17. These will be acceptable as equal products if they meet all the specification requirements. Or equal products must be submitted no later than 5 working days after the NOI.

Q18. Regarding P-630 (43 23 89.11), please provide official recognition of the Grundfos JP PS 16 10 187 pump (attached) as an "equal".

A18. These will be acceptable as equal products if they meet all the specification requirements. Or equal products must be submitted no later than 5 working days after the NOI.

Q19. Referencing Section 40 05 01 2.01 Pipe Materials does not match the annotations for the "M" drawings. Please provide an updated schedule that reflects the missing Process Service Identifiers. For example, "CTA" shown on drawing M-13, does not exist on the Pipe Materials list.

A19. CTA Refers to Citric Acid as shown on P&IDs. Materials are on Drawing M-13.

Q20. Referencing Drawing M-13, the 4" MBRE pipe system goes through 4-each 500ft coils and then continues Southeast and then disappears. Where is the point of connection for this system?

A20. This pipe will connect to the pipe routed along the retaining wall on the east and will feed the Advanced Treatment systems located in Area 7.

Q21. Referencing Drawings M-13 and M-06, there are two chemical systems entering Area 4, ½" CS and 2" ACOH. Please provide their point of connections. It is not shown on M-06 or in any referenced section drawings.

A21. Please refer to respective P&IDs for connection points.

Q22. Referencing Drawing M-21, it looks like there are about 29-each various chemical dosing pumps shown. The distribution lines are not shown. Please identify on the drawings the pump numbers and the point of connections for each dosing system.

A22. The lines shall be field routed based on the P&IDs.

Q23. Referencing Drawing M-21, please confirm which chemical lines outside of the chemical containment area required to be double contained.

A23. All chemicals shall have double containment pipe/tubing outside the respective chemical containment.

Q24. Referencing Section 40 05 01 2.01 Pipe Materials and Drawing M-15. Section 40 05 01 has Services OCE, ODIE, ODIF, OFBE, and ODBF designated as Stainless-Steel pipe materials. Drawing M-15 has these systems as PVC. Please confirm which is correct.

A24. These pipe materials were clarified in Addendum C.

Q25. Please provide the CAD and 3D models for the project.

A25. CAD Files can be provided after award of Contract.

Q26. Please provide the system name, pipe material, test pressure for the following systems found on the M drawings but not shown in Section 40 05 01. MFBW, CIPR, CIPFL, COMBPF, BACBWF, BACEO.

A26. The abbreviations are defined in Drawings G-04 to G-06. MFBW - MF system Backwash /PVC/60 psig; CIPR - CIP Return/PVC/90 psig; CIPFL - CIP Flush / PVC/ 90 psig; COMBPF - Combined Permeate/PVC/45 psig; BACBWF - BAC Backwash Feed/PVC/30 psig; BACEO - BAC Effluent Overflow/PVC/30 psig.

Q27. Drawing M-13 shows a 2” PA (SS) system located in the Utility Trench towards Areas 7 and 8. Areas 7 and 8 do not show a 2” PA (SS) system. Please provide the point of connection for the 2” PA (SS) System.

A27. The air line shall be field routed to connect to systems as shown on P&IDs and Key Note 5 on Drawing M-13.

Q28. Provide a specification for the HDPE Pipe required on M-13.

A28. Minimum requirements are covered in Key Note 8 on Drawing M-13. HDPE coils shall be DR 13.5 or better and shall be supplied in 500 ft long coils. The design assumed approx. 8 ft diameter coils. Typical HDPE pipes used for irrigation or other water service is adequate.

Q29. Please confirm the contractor is required to hire a piping system design engineer as noted in Sections 40 05 01, 40 05 07, 40 05 07.13 and 40 05 07.16. If the final pipe design per these specifications differs from the provided documents please confirm the City will consider this a changed condition.

A29. The Contractor is required to hire a piping system designer as specified to complete the piping design. It will not be considered a change if the Piping Designer modifies the routing.

Q30. Please reference WHITEBOOK Section 4-3.4 and 4-3.4.1. There is no Bid Item for "Specialty Inspection Paid For By the Contractor". Please advise if a Bid Item will be added to reimburse the Contractor for these costs.

A30. Specialty Inspection Paid for By the Contractor shall be included in the Lump Sum Item for CASSF (Line Item 5).

Q31. Please reference WHITEBOOK Section 4-3.3.4. - Specialty Testing of Foreign Materials. Please advise who is responsible for arranging and paying for the "distribution point in California" for items manufactured, produced, or fabricated outside of the United States.

A31. The Contractor is responsible for arranging and paying.

Q32. Please consider approving the Aurora 651A 4x4x7 as an approved equal for the P-350 application. It meets all of the design conditions and material specifications as outlined in Specification Section 43 23 89.11.

A32. If the pump meets all Contract Specification requirements it will be accepted as an equal product. Or equal products must be submitted no later than 5 working days after the NOI.

Q33. Please consider approving the Grundfos JP PS 16 10 187 as an approved equal for the P-630 application. It meets all of the design conditions and material specifications as outlined in Specification Section 43 23 89.11.

A33. If the pump meets all Contract Specification requirements it will be accepted as an equal product. Or equal products must be submitted no later than 5 working days after the NOI.

Q34. After consulting with various suppliers, it has been indicated to us that lead times for PVDF pipe and fittings are currently 40-50 weeks. This is primarily due to increases in its use from other industries such as EV batteries. Please see the attached letter from Georg Fischer. Please advise if another material type can be allowed in lieu of PVDF such as Polypropylene.

A34. Alternate materials compatible and equivalent with the fluid being handled will be considered with proper justification.

Q35. Please reference drawing B07 and Spec Section 01 50 00 paragraphs 3.07.B and 3.07.C. The Project Boundaries drawing does not indicate where construction craft personnel parking is located. Paragraph 3.07.B states "If equipment staging and parking facilities are not identified in the Contract Documents, the Contractor's proposed locations for these purposes is subject to City approval.". Paragraph 3.07.C states "Provide parking facilities for personnel working on Project. No employee or equipment parking will be permitted on Owner's existing paved areas except as specifically designated for Contractor's use.". Please indicate where employee parking is permitted on the treatment plant site. This may have cost implications due to union labor requirements governing the maximum walking distance allowed from the designated parking area to the work area.

A35. The space identified for Contractor's Staging Area and Construction Trailers are available for the contractor’s use. Limited additional parking can be coordinated at the parking lot west of CASSF site during construction.

Q36. Please reference specifications 40 05 01 and 40 05 45. Section 3.11.N of 40 05 01 calls out for detectable warning tape for all buried pipe and tracer wire as specified in 40 05 45. Section 2.02.A of 40 05 45 calls out for tape and tracer wire for all buried pipe similar to standard drawings SDM-105 and SDW-131. Please confirm if both systems of pipeline identification should be installed on all underground pipelines.

A36. Confirmed, both are required.

Rania Amen, Director
Engineering & Capital Projects Department

Dated: *January 5, 2023*
San Diego, California

RA/AJ/na

Bid Results

Bidder Details

Vendor Name	J. R. Filanc Construction Co., Inc.
Address	740 N. Andreasen Drive Escondido, California 92029 United States
Respondee	Bob Zaiser
Respondee Title	Vice President
Phone	760-941-7130
Email	bids@filanc.com
Vendor Type	CADIR
License #	134877
CADIR	1000001631

Bid Detail

Bid Format	Electronic
Submitted	01/12/2023 1:55 PM (PST)
Delivery Method	
Bid Responsive	
Bid Status	Submitted
Confirmation #	314893

Respondee Comment

Buyer Comment

Attachments

File Title	File Name	File Type
Vendor Debarment and Suspension Form.pdf	Vendor Debarment and Suspension Form.pdf	DEBARMENT AND SUSPENSION CERTIFICATION FOR SUBCONTRACTORS, SUPPLIERS AND MANUFACTURERS
Prime Debarment and Suspension Cert.pdf	Prime Debarment and Suspension Cert.pdf	DEBARMENT AND SUSPENSION CERTIFICATION FOR PRIME CONTRACTOR
Mandatory Disclosure of Business Interests.pdf	Mandatory Disclosure of Business Interests.pdf	MANDATORY DISCLOSURE OF BUSINESS INTERESTS FORM
Contractors Cert of Pending Action.pdf	Contractors Cert of Pending Action.pdf	CONTRACTOR'S CERTIFICATION OF PENDING ACTIONS
Bid Bond.pdf	Bid Bond.pdf	Bid Bond

Subcontractors

Showing 8 Subcontractors

Name & Address	Desc	License Num	CADIR	Amount	Type
*LEED ELECTRIC INC 13138 Artic Circle Santa Fe Springs, California 90670	Constructor: E&IC	379096	1000004633	$6,900,000.00	
Bonita Pipeline, Inc. 140 N Glover Avenue Chula Vista, California 91910	SLBE Constructor: demo, u/g piping, ductbanks, u/g pump stations, PE Tanks, ozone, CCRO, FRRO	817325	1000018819	$4,500,000.00	DVBE, DBE, MBE, CADIR, SDB, PQUAL, MALE, SDVSB, LAT, HUBZ, Local
Condon Johnson 490 Roland Way, Suite 200 Oakland, California 94621	Constructor: Piles	300068	1000004443	$550,000.00	
INTEGRITY REBAR 1345 NANDWA AVE PERRIC, California 92571	Constructor: Rebar	533729	1000005302	$475,000.00	
Kirk Paving, Inc. 8722 Winter Gardens Blvd. Lakeside, California 92040	SLBE Constructor: Paving	749206	1000002341	$46,000.00	CADIR, Local
Leopold Biological Services 11160 Portobelo Drive San Diego, California 92124	ELBE Consultant: Biological monitoring	000000	0000000000	$36,000.00	DBE, WBE, SDB, FEM, WOSB, CAU, Local
NOVA Services, Inc. DVBE/SLBE 4373 Viewridge Ave Suite B San Diego, California 92123	SLBE Consultant: Material inspection	000000	1000007909	$60,000.00	DVBE, CADIR, SLBE, SDVSB, Local
National Coating & Lining 26713 Madison Ave Murrieta, California 92562	Constructor: Coatings	886430	1000013795	$370,000.00	MALE, CAU

Line Items

Discount Terms No Discount

Item #	Item Code	Type	Item Description	UOM	QTY	Unit Price	Line Total	Response	Comment
Main Bid							$38,431,331.00		
1	524126		Bonds (Payment and Performance)	LS	1	$300,000.00	$300,000.00	Yes	
2	237110		Mobilization	LS	1	$1,100,000.00	$1,100,000.00	Yes	
3	541330		WPCP Development	LS	1	$25,000.00	$25,000.00	Yes	
4	237310		WPCP Implementation	LS	1	$100,000.00	$100,000.00	Yes	
5	237110		Central Area Small-Scale Facility	LS	1	$33,726,031.00	$33,726,031.00	Yes	
6	236220		Field Orders (EOC Type II) Allowance	AL	1	$3,135,300.00	$3,135,300.00	Yes	
7	236220		Building Permit (EOC Type I) Fees Allowance	AL	1	$5,000.00	$5,000.00	Yes	
8	541330		Biological Monitoring and Reporting	LS	1	$40,000.00	$40,000.00	Yes	

Line Item Subtotals

Section Title	Line Total
Main Bid	**$38,431,331.00**
Grand Total	**$38,431,331.00**